AFOSR 69-0006TR

AD 686776

UNIVERSITE CATHOLIQUE DE LOUVAIN

LABORATOIRE D'ELECTRONIQUE

NETWORK THEORY

THE STATE - SPACE APPROACH

by

R. W. NEWCOMB

Associate Professor

Stanford University

DDC

MAY 9 1969

A

1. This document has been approved for public release and sale; its distribution is unlimited.

LIBRAIRIE UNIVERSITAIRE

LOUVAIN

Reproduced by the
CLEARINGHOUSE
for Federal Scientific & Technical
Information Springfield Va. 22151

15

DISCLAIMER NOTICE

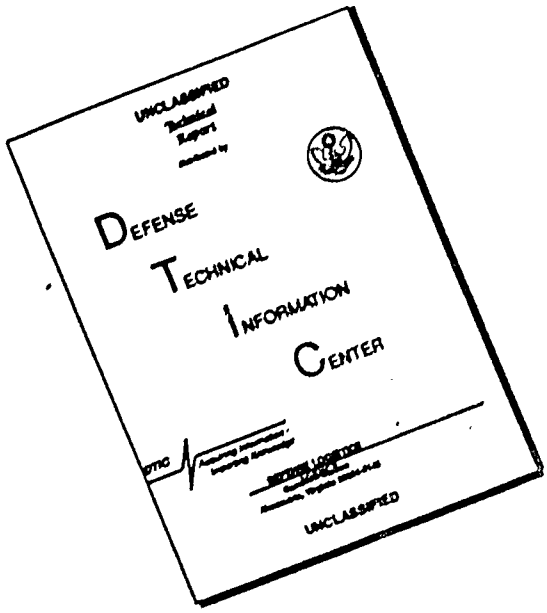

THIS DOCUMENT IS BEST QUALITY AVAILABLE. THE COPY FURNISHED TO DTIC CONTAINED A SIGNIFICANT NUMBER OF PAGES WHICH DO NOT REPRODUCE LEGIBLY.

UNIVERSITE CATHOLIQUE DE LOUVAIN

LABORATOIRE D'ELECTRONIQUE

NETWORK THEORY
THE STATE - SPACE APPROACH

by

R. W. NEWCOMB

Associate Professor

Stanford University

LIBRAIRIE UNIVERSITAIRE

LOUVAIN

NETWORK THEORY: THE STATE-SPACE APPROACH

by

R. W. Newcomb

NETWORK THEORY: THE STATE-SPACE APPROACH

Table of Contents

Preface, Acknowledgments, Dedication . Page ii,iv,v

I. Introduction - The State Page 1
Summary, The State-Intuitively, The State-Uses, The State-Mathematical, The State-Brune Section Example, Discussion, References, Exercises

II. Formulation of Canonical Equations Page 19
Summary, Capacitor Extractions, Topological Formulation, Transformation to Canonical Form, Discussion, References, Exercises

III. Integrated and Analog Circuit Configurations Page 43
Summary, Canonical Equation Simulation--Block Diagram, Integrators and Summers, Scalar Degree Two Realizations, Canonical Equation Simulation--Admittances, Discussion, References, Exercises

IV. Minimal Realization Creation Page 57
Summary, Scalar Minimal Realizations, Matrix Minimal Realizations, Examples, Discussion, References, Exercises

V. Equivalence Page 71
Summary, Minimal Equivalents, Controllability and Observability, Nonminimal Equivalents, Discussion, References, Exercises

VI. Sensitivity and Transition Matrices Page 84
Summary, Scalar Transfer Function Sensitivity, Pole Position Sensitivities, Time-Domain Variations, Transition Matrix Evaluation, Discussion, References, Exercises

VII. Positive-Real Admittance Synthesis Page 94
Summary, Introductory Remarks, The PR Lemma, PR Admittance Synthesis, Example, Discussion, References, Exercises

VIII. Lumped-Distributed Lossless Synthesis Page 110
Summary, Introductory Material, Minimal Realization Creation, Examples, Symmetrization, Discussion, References, Exercises

IX. Time-Variable Synthesis Page 124
Summary, Properties of Impulse Response Matrices, Passive Voltage Transfer Function Synthesis, Passive Admittance Synthesis, Discussion, References, Exercises

Conclusions, List of Principal Symbols, Index Page 137,139,140

Ici régnait aussi cet amour qui ne s'exprime plus parce qu'il ne participe pas a la vie de ce monde. Il ne supporterait peut-être aucune épreuve, il semble a chaque instant trahi, et la moindre amitié ordinaire a l'air de la vaincre, et cependant sa vie est plus profonde que nous-mêmes et peut-être ne nous semble-t-il indifférent que parce qu'il se sait réservé pour des temps plus longs et plus sûrs.

M. Maeterlinck
"Les Avertis" du "Trésor des Humbles"

PREFACE

The nine chapters which follow represent the set of lectures given as a final year one semester course at L'Université Catholique de Louvain for the first semester of the 1967-68 school year. Because of the presence of two national languages with the lectures given in a third it was decided to record the material as covered for student assistance and availability for future studies. Also the material often records in a consistent whole unavailable research results, and puts on further record the nature of joint cooperation between our associated research groups at Stanford and Louvain.

In the field of electrical engineering the theory of state-variables has raised some rather paradoxical situations. On the one hand it is often claimed that nothing can be achieved with state-variables that can not be done with more classical methods. This point is most frequently raised by those who wish to construct working circuits. On the other hand the mathematically inclined have a tendency to develop rather minute points or to get involved in the elegence of the theory with an attendant sacrifice of the practically important aspects. As a consequence the two natures of theory and practice tend to become further separated when state-variables are involved. Here we would at least make an attempt to resolve this paradoxical situation; that is, we would try to bring

theory closer to practice and vice versa. This is done by presenting a coherent whole with emphasis upon those aspects of the theory for which use can almost immediately be seen or which have proven themselves in practice. Actually the subject was suggested by the Université; as we felt that some value could result in the intended types of treatment we have enjoyed the challenge and hope that the venture has proven profitable for all concerned.

It should be remembered that the material represents lectures and not a polished book, even though it has somewhat the form of a book for convenience of the user. As a consequence of its lecture form as well as the circumstances of its construction, there is much omitted which could profitably be contained. For example, there are points of derivations which could profitably be put into notes for completeness but which have been omitted in order to cover the material desired in the allotted time. Of equal importance is the scarcity of references; generally only a single reference available to the author's students at the time is given while multiple referencing would be much preferable. Likewise there are some topics, as topological and nonlinear synthesis, which have been almost entirely omitted but which should properly not be for completeness. Among works which we would have liked to add, perhaps to be saved for a revised edition, are those of J. Hiller (active theory), P. Wang (infinite dimensional theory), H. Watanabe (nonlinear theory), R. Yarlagada (topological synthesis), and D. Youla (lumped-distributed synthesis). A list of symbols and an index is appended for convenience.

In conjunction with our belief that life should be constructive and associated with a masculine spirit of verse which enhances its poetry, we incorporate some nontrivial concepts of the Flemish writer in French, M. Maeterlinck.

R. Newcomb
Louvain, January 1968

Om dat die leeke van allen zaken
Rime ende dichte willen maken
Gheijc clerken, dat wonder es,
So hebbic mi bewonden des
Dat ic nu wil bringhen voort
Wat enen dichter toe behoort,
Die te rechte sal dichten wel;
Want dichten en is gheen spel.
Men sal ooc voren versinnen,
Hoemen dat dicht zal beghinnen,
Middelen ende daer toe enden.

Jan Boendale
"De Leke Spieghel, III"

ACKNOWLEDGMENTS

It is with the greatest pleasure that the author takes this opportunity to acknowledge, and publicly thank, Professor N. Rouche whose efforts, immediate and through past cooperative researches, made our stay at Louvain possible. Perhaps this work can be considered as a tribute to the program carried out by Professor Rouche. Likewise we owe an equal debt of gratitude to Professor V. Belevitch who first proposed such a visit to us. Another special debt is owed to Colonel B. R. Agins and Captain A. Dayton of the US AFOSR who supported much of the research presented. Among many others who have been helpful during our stay we would acknowledge the following who have been of particular assistance: B. Anderson, M. Bhushan, M. Białko, G. Biorci, R. Boite, B. Cayphas, S. Chiappone, M. Davio, H. P. Debruyn, C. Desoer, J. Deutsch, P. Dewilde (especially), V. and S. Doležal, T. Duson, G. Francois, L. Fritz, A. Friziani, A. González-Domínguez, E. Gödör, W. Heinlein, W. Holmes, P. Jespers, Y. Kamp, J. Linvill, L. Lloyd, M. Martens, J. Neirynck, M. Novák, R. G. de Oliveira, L. Pope, E. and C. Sautter, L. Silverman, R. Spence, F. Stumpers, B. Tellegen, M. E. Terry, P. Van Bastelaer, A. Vander Vorst, E. Van Lantschoot, R. Van Overstraeten, J. Winkler.

In the words of M. Maeterlinck ["Les Avertis" du "Tresor des Humbles"]

L'on sent que c'est l'heure enfin
d'affirmer une chose plus grave, plus humaine,
plus réelle et plus profonde que l'amitié,
la pitié ou l'amour; une chose qui bat
mortellement de l'aile tout au fond de la
gorge, et qu'on ignore, et qu'on n'a
jamais dite, et qu'il n'est plus possible
de dire, car tant de vies se passent
à se taire! ... Et le temps presse.

for

M. A. Gillett

Souvent, nous n'avons pas le temps de les apercevoir; ils s'en vont sans rien dire et ceux-là nous demeurent à jamais inconnus.

M. Maeterlinck
"Les Avertis" du "Trésor des Humbles"

CHAPTER I

INTRODUCTION - THE STATE

A. Summary

Here we briefly review the philosophical nature of the state giving a more or less precise mathematical formulation in terms of system transformations and network relationships. An example concerning the Brune structure is given to illustrate various points of the theory to be considered.

B. The State - Intuitively

Intuitively an object can be described at a given instant by a certain set of conditions which in fact are specified by the object being described; these conditions are often referred to as the state of the object. However, in scientific discussions the state is usually taken to mean that set of conditions which when specified at a given instant of initiation of an excitation lead to a predicted response over the period of excitation. Thus the concept is generally applied to causal (that is, nonanticipatory or equivalently antecedal) systems where it is possible to predict the output to a given input. A specification of the necessary conditions to allow determination of the output, that is an assignment of initial conditions, is essentially a specification of the state. The state then is that entity, described through a set of parameters (perhaps uncountably infinite in number), which when prescribed initially allows a unique motion of the entity under determinate excitations. We shall soon make the concept precise mathematically at

which time we will see that a slight modification is of interest for treating networks.

C. The State - Uses

Although of the most recent development, our primary interest will be the use of the state for design or synthesis. For synthesis we need to develop a formulation which is convenient for decomposition and construction. In obtaining a suitable development we shall investigate analysis methods from which we will see that by isolating a set of state variables a convenient analysis method is obtained. The method is especially convenient for digital computer formulation, and thus, we will obtain several methods for digital computer analysis for circuits. The results are further useful for investigation of the transient and frequency responses of networks as well as for the determination of natural frequencies. Similarly a useful technique for investigating sensitivity is obtained. Of particular importance is also the means of determining "all" possible equivalents. By reversing the analysis process one is led to several design formulations. For example, given a transfer function one can algebraically set up a canonical set of state variable equations, by a means suitable for digital computer programming. From the canonical equations one can revert to an analog computer realization, the result being of considerable use for integrated circuit design using operational amplifiers. By another interpretation of the canonical equations one can obtain an alternate minimal capacitor synthesis by loading a gyrator-resistor network. By proper generalization of multivariable functions we can also develop a synthesis for lumped-distributed circuits.

Although it can be claimed that the state variables are nothing more than an appropriate choice of variables for initial conditions, such an outlook is rather narrow. In fact previous results obtained from an "initial condition" outlook are rather weak and shallow when compared to what has been achieved by the state variable outlook. From the previous paragraph we can summarize the results of state variable theory to be discussed in the sequel by the following topics:

1. Digital Computer Analysis
   a. Formulation of canonical equations
      (1) Topological means
      (2) Reactive extractions
   b. Transient analysis
   c. Frequency response
2. Analog Simulation
   a. Integrated circuits
   b. Filter design
3. Equivalence
   a. Minimal realization transformations
   b. Nonminimal (encirclements)
4. Sensitivity
5. Finite Synthesis
   a. Minimal realizations
   b. Loaded n-port theory
   c. Lossless synthesis (hybrid)
6. Multivariable Realizations
   a. Minimal realizations, etc.
   b. Lumped-distributed synthesis
   c. Noncommensurate line synthesis
7. Distributional Generalizations
   a. Representations
   b. Time-variable circuits
8. Inifinite-Dimensional Extensions

D. The State - Mathematical

Let us consider as given a system designed to map inputs $\underset{\sim}{u}$ into outputs $\underset{\sim}{y}$. If we know all inputs applied to the system from its time of construction to the time of observation, t, then $\underset{\sim}{y}(t)$ is "uniquely" known and is determined through a knowledge of the system transformation. However, it is more frequent that we have on hand a given system which we will begin to use at time t_o, generally without a knowledge of the inputs applied before t_o. We will assume that there is a set of parameters

$\underset{\sim}{s}(t_o)$ which we can measure, or somehow determine, such that if the <u>input</u> $\underset{\sim}{u}(t)$ is known for $t \geq t_o$ then also for $t \geq t_o$ the <u>output</u> $\underset{\sim}{y}(t)$ is uniquely determined [upon a specification of the <u>state</u> $\underset{\sim}{s}(t_o)$]. Since the output is uniquely determined, there exists a <u>transformation</u> $\underset{\sim}{T}[\cdot,\cdot]$ such that

$$\underset{\sim}{y} = \underset{\sim}{T}[\underset{\sim}{u},\underset{\sim}{s}(t_o)], \qquad t \geq t_o \tag{I-1}$$

Since t_o can vary, the state $\underset{\sim}{s}$ is also a "function" of time as is of course reasonable on intuitive grounds. We point out that in general $\underset{\sim}{y}$, $\underset{\sim}{u}$, and particularly $\underset{\sim}{s}$ are multidimensional quantities; we will take $\underset{\sim}{u}$ as an m-vector, $\underset{\sim}{y}$ as an n-vector, and $\underset{\sim}{s}$ as a k-vector [for example, k will often be the number of capacitors and inductors in a circuit]. Pictorially Eq. (I-1) is represented as in Fig. I-1.

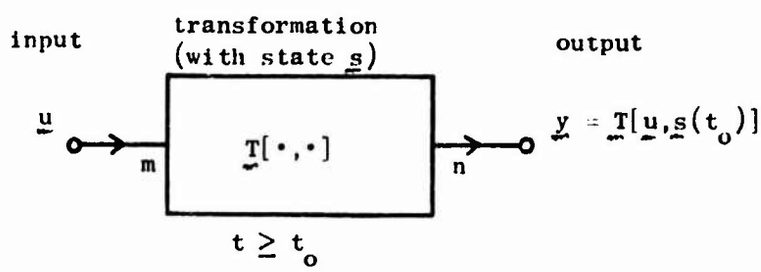

Fig. I-1. SYSTEMS REPRESENTATION.

A system which can be represented by a transformation of the form of Eq. (I-1) is conveniently called a <u>state determined system</u>. One can in fact make a detailed study of the general types of state determined systems [1, p. 67] but it seems more important for our purposes to proceed to other studies. However, we define a few useful concepts. First is that of the <u>zero state</u> $\underset{\sim}{\theta}$, defined through

$$\underset{\sim}{0} = \underset{\sim}{T}[\underset{\sim}{0},\underset{\sim}{\theta}(t_o)], \qquad t \geq t_o \tag{I-2}$$

In other words a zero state is any state which gives a zero output for a zero input. As an example of a nonzero zero state consider the balanced bridge circuit of Fig. I-2 where the capacitor voltage serves as the

state, $\underset{\sim}{s}(t) = \{v_c(t)\}$, and we take the applied voltage as input with the source current as output. When the applied voltage is zero no input current flows as is seen by the redrawing shown in the (b) portion of the figure; thus, $\underset{\sim}{\theta} = \{\underset{\sim}{v}_c(t)\}$. We observe that in this system all

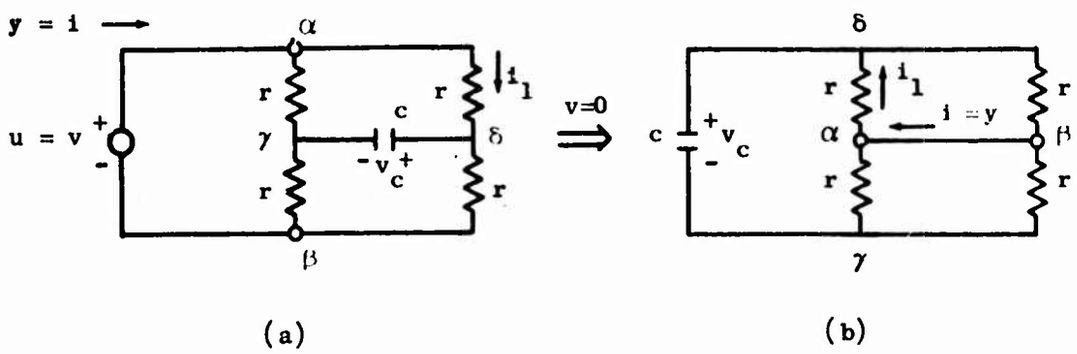

Fig. I-2. NONZERO ZERO-STATE EXAMPLE.

states are the zero state, but in general such will not be he case. For example if we had taken i_1 as the output, the output would only have been zero if $v_c = 0$, that is for this new system, with $u = v$, $y = i_1$ the state $\underset{\sim}{s} = \{v_c(t)\}$ is only the zero state when it is zero; $\underset{\sim}{\theta} = \{0\}$.

With the concept of the zero state on hand we can consider the definition of a linear system. A system is called <u>linear</u> (with respect to inputs) if for all constants k, all initial states $\underset{\sim}{s}(t_o)$, all zero states $\underset{\sim}{\theta}(t_o)$, and all inputs $\underset{\sim}{u}_1$ and $\underset{\sim}{u}_2$.

$$\underset{\sim}{T}[k(\underset{\sim}{u}_1-\underset{\sim}{u}_2),\underset{\sim}{\theta}(t_o)] = k\underset{\sim}{T}[\underset{\sim}{u}_1,\underset{\sim}{s}(t_o)]-k\underset{\sim}{T}[\underset{\sim}{u}_2,\underset{\sim}{s}(t_o)] \qquad \text{(I-3)}$$

We observe that because of the need to consider the state there is a difference between a linear system (in its mathematical representation) and a linear transformation. An immediate consequence of this definition of linearity is the <u>fundamental decomposition</u> obtained by taking $k = 1$, $\underset{\sim}{u}_1 = u$, $\underset{\sim}{u}_2 = 0$.

$$\underset{\sim}{T}[\underset{\sim}{u},\underset{\sim}{s}(t_o)] = \underset{\sim}{T}[\underset{\sim}{0},\underset{\sim}{s}(t_o)] + \underset{\sim}{T}[\underset{\sim}{u},\underset{\sim}{\theta}(t_o)] \qquad \text{(I-4)}$$

That is, for a linear system the total response can be broken into the sum of two parts, one of which is the zero input response and the other of which is the zero state response. Thus, superposition not only holds with respect to inputs, as Eq. (I-3) shows, but also with respect to the response from initial conditions.

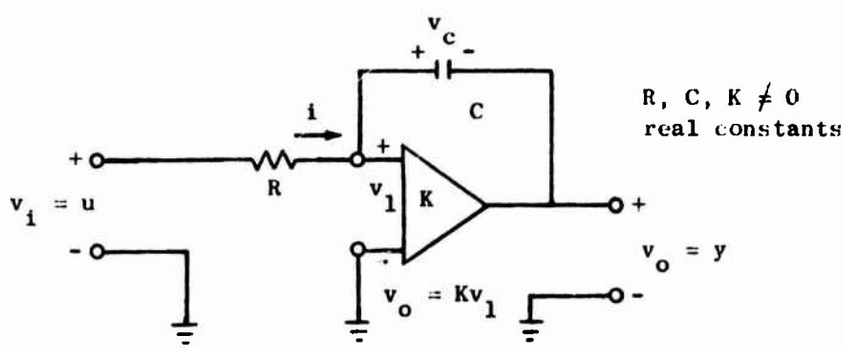

Fig. I-3. INTEGRATOR.

As an example of the decomposition let us consider the integrator of Fig. I-3. The describing equations can be taken as

$$Ri = v_i - \frac{v_o}{K}, \qquad i = \frac{Cd[v_o/K - v_o]}{dt}$$

which upon simple substitution of the first into the second yields the following differential equation completely in terms of input and output variables.

$$\frac{RC(1-K)}{K}\frac{dv_o}{dt} + \frac{v_o}{K} = v_i \qquad \text{(I-5a)}$$

To obtain the transformation mapping the input into the output this differential equation must be solved. We find by any of several means (Laplace transforms, for example)

$$v_o(t) = \underbrace{v_o(t_o)\exp\left[-\frac{1}{RC(1-K)}(t-t_o)\right]}_{\underset{\sim}{T}[\underset{\sim}{0},\underset{\sim}{s}(t_o)]} + \underbrace{\int_{t_o}^{t}\left\{\exp\left[-\frac{1}{RC(1-K)}(t-\tau)\right]\right\}\left[\frac{K}{RC(1-K)}v_i(\tau)\right]d\tau}_{\underset{\sim}{T}[\underset{\sim}{u},\underset{\sim}{\theta}(t_o)]} \qquad \text{(I-5b)}$$

We see that Eq. (I-4) is satisfied and that $\underset{\sim}{s}(t) = \{v_o(t)\} = \{y(t)\}$ is a suitable choice for the state. Since $v_c = \frac{1-K}{K} v_o$ we also see that an appropriate (alternate) choice for the state is $\underset{\sim}{s}(t) = \{v_c(t)\}$.

Perhaps much more should be said about the domains of definition of the various quantities but such discussions can also get lengthy. We merely mention that for a given system there is usually some restriction on the type of inputs allowed as well as the range of outputs for which the mathematical transformation $\underset{\sim}{T}[\cdot,\cdot]$ is valid. In our study we will most often assume that the input and output are zero before $t = t_o$ and that they, along with the state, are real valued.

For linear systems it will often be possible to find a description in the form

$$\frac{d\underset{\sim}{s}(t)}{dt} = \underset{\sim}{A}(t)\underset{\sim}{s}(t) + \underset{\sim}{B}(t)\underset{\sim}{u}(t) \qquad \text{(I-6a)}$$

$$\underset{\sim}{y}(t) = \underset{\sim}{C}(t)\underset{\sim}{s}(t) + \underset{\sim}{D}(t)\underset{\sim}{u}(t) + \underset{\sim}{E}(t)\frac{d\underset{\sim}{u}(t)}{dt} \qquad \text{(I-6b)}$$

If such can be found, these equations are called a <u>canonical representation</u> and the set

$$R = \{\underset{\sim}{A},\underset{\sim}{B},\underset{\sim}{C},\underset{\sim}{D},\underset{\sim}{E}\}$$

is called a <u>realization</u>. For such a system having the dimension, k, of the state finite, we ascribe the name <u>finite</u> or <u>differential system</u>. Likewise, if the coefficient matrices, $\underset{\sim}{A}(t)$, ..., are constant then the system is called <u>time-invariant</u> (actually this time-invariance is a special case of a more general definition applicable to any state

determined system [2, p.]). In most situations of interest the useful information about the system is contained in the matrices $\underset{\sim}{A}$, $\underset{\sim}{B}$, and $\underset{\sim}{C}$, so we will often assume that either $\underset{\sim}{E} = \underset{\sim}{0}$ or $\underset{\sim}{D} = \underset{\sim}{E} = \underset{\sim}{0}$. Thus, most of our concern will be with the canonical set of equations

$$\frac{d\underset{\sim}{s}}{dt} = \underset{\sim}{A}\,\underset{\sim}{s} + \underset{\sim}{B}\,\underset{\sim}{u} \tag{I-7a}$$

$$\underset{\sim}{y} = \underset{\sim}{C}\,\underset{\sim}{s} + \underset{\sim}{D}\,\underset{\sim}{u} \tag{I-7b}$$

and the realization

$$R = \{\underset{\sim}{A},\underset{\sim}{B},\underset{\sim}{C},\underset{\sim}{D}\} \tag{I-7c}$$

It is possible to interrelate the canonical equations with the zero state response, $\underset{\sim}{T}[\underset{\sim}{u},\underset{\sim}{0}(t_o)]$, in the time-invariant case (a similar development holds for time-varying systems). When the realization R is constant, Eqs. (I-6) yield a continuous transformation, in the sense of distribution theory, mapping inputs into outputs (in the zero state). Consequently, there exists a matrix $\underset{\sim}{h}(t)$ such that [3, p. 223]

$$\underset{\sim}{T}[\underset{\sim}{u},\underset{\sim}{0}(t_o)] = \underset{\sim}{h} * \underset{\sim}{u}$$

$$= \int_{-\infty}^{\infty} \underset{\sim}{h}(t-\tau)\,\underset{\sim}{u}(\tau)\,d\tau \tag{I-8}$$

where $*$ denotes convolution, that is, the integration exhibited (recall that $\underset{\sim}{u}(\tau)$ is zero for $\tau < t_o$). The $n \times m$ matrix $\underset{\sim}{h}$ consists of distributions (functions, impulses, etc.) and is called a <u>distributional kernel</u>; physically it represents a matrix of impulse responses. For Fig. I-2 we have, for example,

$$h(t) = \frac{1}{r}\,\delta(t) \tag{I-9a}$$

while for Fig. I-3 we have

$$h(t) = \frac{K}{RC(1-K)}\left\{\exp\left[-\frac{t}{RC(1-K)}\right]\right\}1(t) \qquad \text{(I-9b)}$$

where $1(t)$ is the unit step function and $\delta(t) = d1(t)/dt$ is the unit impulse. By taking Laplace transforms, denoted by $\mathcal{L}[\ ]$, we have from Eq. (I-8)

$$\mathcal{L}[\underset{\sim}{r}[\underset{\sim}{u},\underset{\sim}{\theta}]] = \underset{\sim}{H}(p)\ \mathcal{L}[\underset{\sim}{u}] \qquad \text{(I-10a)}$$

$$\underset{\sim}{H}(p) = \mathcal{L}[\underset{\sim}{h}] \qquad \text{(I-10b)}$$

where $\underset{\sim}{H}(p)$, $p = \sigma + j\omega$, is called the <u>transfer function matrix</u> (it is $n \times m$ also). By taking Laplace transforms in Eq. (I-6) we can obtain, by straightforward substitution, an alternate expression for the transfer function matrix

$$\underset{\sim}{H}(p) = p\underset{\sim}{E} + \underset{\sim}{D} + \underset{\sim}{C}(p\underset{\sim}{1}_k - \underset{\sim}{A})^{-1}\ \underset{\sim}{B} \qquad \text{(I-10c)}$$

where $\underset{\sim}{1}_k$ is the $k \times k$ identity matrix. One of the problems of the theory is then to find a realization $R = \{\underset{\sim}{A},\underset{\sim}{B},\underset{\sim}{C},\underset{\sim}{D},\underset{\sim}{E}\}$ given a transfer function $\underset{\sim}{H}(p)$ since then the canonical equations are on hand. A similar problem is to obtain the canonical equations from a given physical structure. We comment that Eq. (I-10c) shows that the transfer functions resulting from the canonical equations are always rational, when k is finite, and possess at most a simple pole at infinity; in the more commonly treated case where $\underset{\sim}{E} = \underset{\sim}{0}$, $\underset{\sim}{H}(p)$ has no pole at infinity.

We will illustrate some of the above points, while exhibiting a set of canonical equations, in the following example of a Brune section. However, first we comment that we have considered a given construct as a system by "orienting" its variables, that is, by specifying inputs and outputs. Thus, as we already saw in Fig. I-2, a given construct can yield several different systems by having different inputs and outputs assigned. Nevertheless, the state will generally remain invariant; that is, given a construct, there is an associated state which in fact can be used with all

systems obtained from the construct. Further, a network has been defined by the set of all pairs $[\underset{\sim}{v}, \underset{\sim}{i}]$ of voltages $\underset{\sim}{v}$ and currents $\underset{\sim}{i}$ allowed at its ports [4, p. 7]. We could proceed from this definition of a network to introduce the state as a set of parameters needed at time t_o to specify allowed pairs $[\underset{\sim}{v}, \underset{\sim}{i}]$ for $t > t_o$. But for our purposes it is sufficient to orient variables at the network ports and work with inputs and outputs, as for example through the admittance or scattering matrices. We note, though, that in any characterization there is a minimum value for the size, k, of the state. This minimum size is often referred to as the <u>degree</u> δ of the system; through Eq. (I-10c) we see that δ is characterized through $\underset{\sim}{H}$; thus we can write $\delta[\underset{\sim}{H}(p)]$ or (precisely only when $\underset{\sim}{E} = \underset{\sim}{0}$)

$$\delta = \min k = \delta[\underset{\sim}{H}(p)] = \text{system degree}$$

We will later see how to calculate δ directly from $\underset{\sim}{H}(p)$ but for now we merely comment that δ physically represents the minimum number of integrators necessary for an analog simulation of the system described by the canonical equations (I-7). We do mention that it is sometimes of interest to have more than the minimum number of components of the state present, especially for the determination of equivalent realizations to satisfy some specified constraints (as for example the desire to incorporate only a certain type of transistor in a design). Figure I-2 has already illustrated an example of a nonminimal realization, where we define a <u>minimal realization</u> as one where the $\underset{\sim}{A}$ matrix is $\delta \times \delta$, that is, has its order equal to the degree of $\underset{\sim}{H}(p)$. In this case $\underset{\sim}{H}(p) = 1/r$, $\delta[\underset{\sim}{H}] = 0$, and we see that the system of Fig. I-2 is equivalent to a resistor, the situation being as shown in Fig. I-4, where Fig. I-2a has been redrawn in the (b) portion.

E. <u>The State - Brune Section Example</u>

At this point let us set up the canonical equations for the nonreciprocal Brune section of Fig. I-5 [5, p.], where we make the

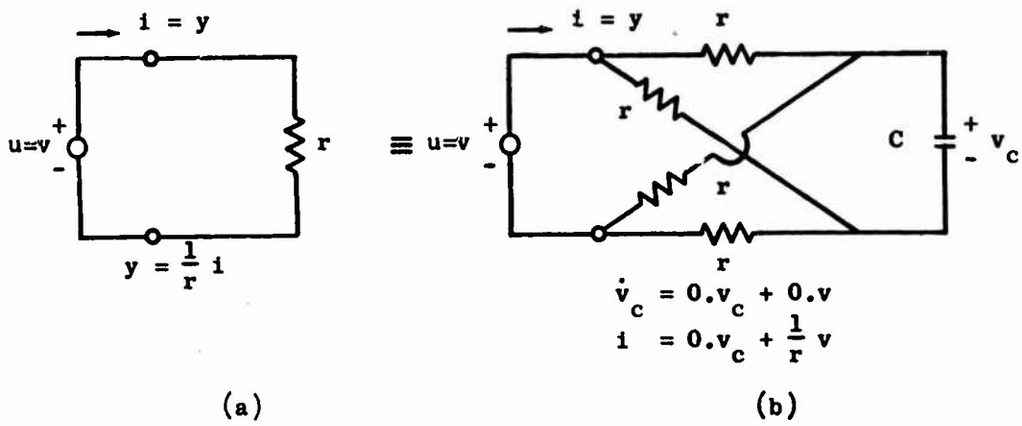

Fig. I-4. ZERO AND ONE-DIMENSION REALIZATIONS OF $H(p) = 1/r$.

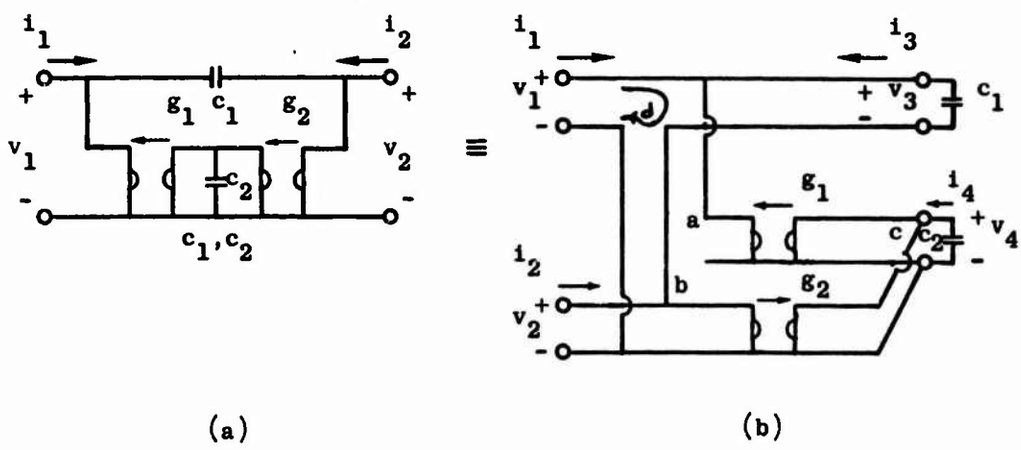

Fig. I-5. NONRECIPROCAL BRUNE SECTION (a) WITH CAPACITOR EXTRACTION (b).

particular choice of input and output (of later use for modeling of filters for integrated circuit realization).

$$\underset{\sim}{u} = \begin{bmatrix} v_1 \\ -i_2 \end{bmatrix}, \qquad \underset{\sim}{y} = \begin{bmatrix} v_2 \\ i_1 \end{bmatrix} \tag{I-9a}$$

In order to analyze the Brune section to obtain the canonical state variable equations we first separate the dynamical elements by removing the capacitors as a load on a purely resistive 4-port, as shown in

Fig. I-5b. We also take as a convention for the gyrators the symbolism of Fig. I-6.

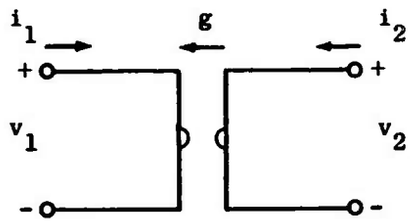

$$\Longrightarrow \quad \underset{\sim}{Y} = \begin{bmatrix} 0 & g \\ -g & 0 \end{bmatrix}$$

Fig. I-6. GYRATOR CONVENTIONS.

By summing currents at the nodes marked a, b, c (in Fig. I-5) and summing voltages around the loop d, respectively, we obtain

$$\begin{bmatrix} 0 & 0 & 0 & g_1 \\ 0 & 0 & 0 & -g_2 \\ -g_1 & g_2 & 0 & 0 \\ -1 & 1 & 1 & 0 \end{bmatrix} \begin{bmatrix} v_1 \\ v_2 \\ v_3 \\ v_4 \end{bmatrix} = \begin{bmatrix} 1 & 0 & 1 & 0 \\ 0 & 1 & -1 & 0 \\ 0 & 0 & 0 & 1 \\ 0 & 0 & 0 & 0 \end{bmatrix} \begin{bmatrix} i_1 \\ i_2 \\ i_3 \\ i_4 \end{bmatrix} \qquad \text{(I-9b)}$$

A suitable choice for the state is generally the set of capacitor voltages or charges and inductor currents or flux, thus we let

$$\underset{\sim}{s} = \begin{bmatrix} c_1 v_3 \\ \\ c_2 v_4 \end{bmatrix} \qquad \text{(I-9c)}$$

for which it follows, from Fig. I-5b, that

$$\dot{\underset{\sim}{s}} = -\begin{bmatrix} i_3 \\ \\ i_4 \end{bmatrix} \qquad \text{(I-9d)}$$

We can therefore rewrite Eq. (I-9b) to specifically exhibit the quantities of interest by rearranging the columns.

$$\begin{bmatrix} 0 & 0 \\ 0 & 1 \\ -g_1 & 0 \\ -1 & 0 \end{bmatrix} \begin{bmatrix} v_1 \\ -i_2 \end{bmatrix} + \begin{bmatrix} 0 & -1 \\ 0 & 0 \\ g_2 & 0 \\ 1 & 0 \end{bmatrix} \begin{bmatrix} v_2 \\ i_1 \end{bmatrix} + \begin{bmatrix} 0 & g_1/c_2 \\ 0 & -g_2/c_2 \\ 0 & 0 \\ 1/c_1 & 0 \end{bmatrix} \begin{bmatrix} c_1 v_3 \\ c_2 v_4 \end{bmatrix} + \begin{bmatrix} 1 & 0 \\ -1 & 0 \\ 0 & 1 \\ 0 & 0 \end{bmatrix} \begin{bmatrix} -i_3 \\ -i_4 \end{bmatrix} = \begin{bmatrix} 0 \\ 0 \\ 0 \\ 0 \end{bmatrix} \qquad \text{(I-9e)}$$

If we add the second row to the first and $-g_2$ times the last row to the third, we can isolate $\underset{\sim}{y}$ from $\dot{\underset{\sim}{s}}$ to get

$$\begin{bmatrix} 0 & 1 \\ 0 & 1 \\ g_2-g_1 & 0 \\ -1 & 0 \end{bmatrix} \underset{\sim}{u} + \begin{bmatrix} 0 & -1 \\ 0 & 0 \\ 0 & 0 \\ 1 & 0 \end{bmatrix} \underset{\sim}{y} + \begin{bmatrix} 0 & (g_1-g_2)/c_2 \\ 0 & -g_2/c_2 \\ -g_2/c_1 & 0 \\ 1/c_1 & 0 \end{bmatrix} \underset{\sim}{s} + \begin{bmatrix} 0 & 0 \\ -1 & 0 \\ 0 & 1 \\ 0 & 0 \end{bmatrix} \dot{\underset{\sim}{s}} = \underline{0}$$

(I-9f)

Using the third row multiplied by -1 and the second row gives

$$\dot{\underset{\sim}{s}} = \begin{bmatrix} 0 & -g_2/c_2 \\ g_2/c_1 & 0 \end{bmatrix} \underset{\sim}{s} + \begin{bmatrix} 0 & 1 \\ g_1-g_2 & 0 \end{bmatrix} \underset{\sim}{u} \qquad \text{(I-9g)}$$

while the fourth (by -1) row and then the first give the desired output equation

$$\underset{\sim}{y} = \begin{bmatrix} -1/c_1 & 0 \\ 0 & (g_1-g_2)/c_2 \end{bmatrix} \underset{\sim}{s} + \begin{bmatrix} 1 & 0 \\ 0 & 1 \end{bmatrix} \underset{\sim}{u} \qquad \text{(I-9h)}$$

These last two equations are the canonical equations for the Brune section.

Using $\underset{\sim}{H}(p) = \underset{\sim}{D} + \underset{\sim}{C}\,(p\underset{\sim}{1}_2 - \underset{\sim}{A})^{-1}\underset{\sim}{B}$ we can find the transfer function.

$$\underset{\sim}{H}(p) = \begin{bmatrix} 1 & 0 \\ 0 & 1 \end{bmatrix} + \begin{bmatrix} -1/c_1 & 0 \\ 0 & (g_1-g_2)/c_2 \end{bmatrix} \begin{bmatrix} p & g_2/c_2 \\ -g_2/c_1 & p \end{bmatrix}^{-1} \begin{bmatrix} 0 & 1 \\ g_1-g_2 & 0 \end{bmatrix}$$

$$= \begin{bmatrix} 1 & 0 \\ 0 & 1 \end{bmatrix} + \frac{1}{p^2 + g_2^2/c_1c_2} \begin{bmatrix} \frac{-1}{c_1} & p \\ 0 & \frac{(g_1-g_2)}{c_2} \end{bmatrix} \begin{bmatrix} p & -g_2/c_2 \\ g_2/c_1 & p \end{bmatrix} \begin{bmatrix} 0 & 1 \\ g_1-g_2 & 0 \end{bmatrix}$$

$$= \frac{1}{p^2 + g_2^2/c_1c_2} \cdot \begin{bmatrix} p^2 + \frac{g_1g_2}{c_1c_2} & \frac{-p}{c_1} \\ p\,\frac{(g_1-g_2)^2}{c_2} & p^2 + \frac{g_1g_2}{c_1c_2} \end{bmatrix} \qquad \text{(I-9i)}$$

We comment that one of the alternate choices available for the state is

$$\hat{\underset{\sim}{s}} = \begin{bmatrix} v_3 \\ v_4 \end{bmatrix}$$

and that for this, or any other choice for the state, we obtain the same transfer function. In fact we observe that there is a nonsingular transformation mapping one choice for the state into another, that is,

$$\underset{\sim}{s} = \underset{\sim}{T}\,\hat{\underset{\sim}{s}}\,, \quad \underset{\sim}{T} = \begin{bmatrix} c_1 & 0 \\ 0 & c_2 \end{bmatrix} \qquad \text{(I-10)}$$

As we will later see, any minimal realization is related to any other through a nonsingular transformation on the state as in Eq. (I-10). In this case $\delta[\underset{\sim}{H}] = 2$, and thus the realization

$$R = \left\{ \begin{bmatrix} 0 & -\dfrac{g_2}{c_2} \\ \dfrac{g_2}{c_1} & 0 \end{bmatrix}, \begin{bmatrix} 0 & 1 \\ g_1 - g_2 & 0 \end{bmatrix}, \begin{bmatrix} \dfrac{-1}{c_1} & 0 \\ 0 & \dfrac{(g_1-g_2)}{c_2} \end{bmatrix}, \begin{bmatrix} 1 & 0 \\ 0 & 1 \end{bmatrix} \right\}$$

is minimal.

F. Discussion

By way of introduction (or review, depending upon previous background), we have considered the meaning of the state and given the primary equations related to our further studies. For differential systems the equations of most interest are the canonical ones.

$$\dot{\underset{\sim}{s}} = \underset{\sim}{A}\,\underset{\sim}{s} + \underset{\sim}{B}\,\underset{\sim}{u} \tag{I-11a}$$

$$\underset{\sim}{y} = \underset{\sim}{C}\,\underset{\sim}{s} + \underset{\sim}{D}\,\underset{\sim}{u} \tag{I-11b}$$

with the associated transfer function yielding the output $\underset{\sim}{y}$ in terms of the input $\underset{\sim}{u}$, when initially in the zero state $\underset{\sim}{s}(t_o) = \underset{\sim}{0}(t_o)$, through

$$\underset{\sim}{y} = \underset{\sim}{h} * \underset{\sim}{u} \tag{I-11c}$$

given by

$$\mathcal{L}[\underset{\sim}{h}] = \underset{\sim}{H}(p) = \underset{\sim}{D} + \underset{\sim}{C}\,(p\underset{\sim}{1}_k - \underset{\sim}{A})^{-1}\underset{\sim}{B} \tag{I-11d}$$

We observe that in this differential system case the state is that set of parameters for which a matrix set of first order differential equations can be set up in terms of the transfer function and its realization. The matrix $\underset{\sim}{h}$ is the impulse response matrix with its Laplace transform $\mathcal{L}[\underset{\sim}{h}]$ being the transfer function. From the expression for $\underset{\sim}{H}(p)$ in

terms of the realization $\underset{\sim}{R} = \{\underset{\sim}{A},\underset{\sim}{B},\underset{\sim}{C},\underset{\sim}{D}\}$ matrices, it is clear that the poles of $\underset{\sim}{H}(p)$ are zeros of the determinant of $p\underset{\sim}{1}_k - \underset{\sim}{A}$, that is, the natural frequencies of the system are eigenvalues of the matrix $\underset{\sim}{A}$.

We also observe that if we have two realizations $R = \{\underset{\sim}{A},\underset{\sim}{B},\underset{\sim}{C},\underset{\sim}{D},\}$ and $\hat{R} = \{\hat{\underset{\sim}{A}},\hat{\underset{\sim}{B}},\hat{\underset{\sim}{C}}\ \hat{\underset{\sim}{D}}\}$ related through

$$\hat{\underset{\sim}{A}} = \underset{\sim}{T}^{-1}\underset{\sim}{A}\,\underset{\sim}{T}, \quad \hat{\underset{\sim}{B}} = \underset{\sim}{T}^{-1}\underset{\sim}{B}, \quad \hat{\underset{\sim}{C}} = \underset{\sim}{C}\,\underset{\sim}{T}, \quad \hat{\underset{\sim}{D}} = \underset{\sim}{D} \tag{I-11e}$$

with $\underset{\sim}{T}$ nonsingular, then the two transfer functions are identical. Thus we have

$$\hat{\underset{\sim}{H}}(p) = \hat{\underset{\sim}{D}} + \hat{\underset{\sim}{C}}\,(p\underset{\sim}{1}_k - \hat{\underset{\sim}{A}})^{-1}\hat{\underset{\sim}{B}} = \underset{\sim}{D} + \underset{\sim}{C}\,\underset{\sim}{T}\,(p\underset{\sim}{T}^{-1}\underset{\sim}{T} - \underset{\sim}{T}^{-1}\underset{\sim}{A}\,\underset{\sim}{T})^{-1}\underset{\sim}{T}^{-1}\underset{\sim}{B}$$

$$= \underset{\sim}{D} + \underset{\sim}{C}\,(p\underset{\sim}{1}_k - \underset{\sim}{A})^{-1}\underset{\sim}{B} = \underset{\sim}{H}(p)$$

consequently we can investigate equivalent systems by manipulating the state variable e ;ations through methods associated with the transformation of Eq. (I-11e), which in fact can be interpreted in terms of the state as a basis change in the state space through $\underset{\sim}{s} = \underset{\sim}{T}\,\hat{\underset{\sim}{s}}$. We are then led to observe that there is a k-dimensional space, the state space, in which we have introduced (Cartesian) coordinates against which the components of $\underset{\sim}{s}$ for the canonical equations are measured. The actual state, for a given input $\underset{\sim}{u}(t)$ and an initial state $\underset{\sim}{s}(t_o)$, traverses the state space on a trajectory $\underset{\sim}{s}(t)$, this trajectory giving the "motion" or behavior of the system, as verified by Eq. (I-11a,b).

Our primary interest will be with linear networks considered as systems through the transformation formulation so far discussed. One could consider the more general nonlinear case described by the matrix differential equations

$$\dot{\underset{\sim}{s}} = \underset{\sim}{f}\,(\underset{\sim}{s},\ \underset{\sim}{u},\ \dot{\underset{\sim}{u}}) \tag{I-12a}$$

$$\underset{\sim}{y} = \underset{\sim}{g}\,(\underset{\sim}{s},\ \underset{\sim}{u},\ \dot{\underset{\sim}{u}}) \tag{I-12b}$$

However, very little is available in the way of synthesis for such equations, so we have chosen to concentrate on the linear case. We also choose to devote efforts primarily to the continuous-time case since it

is of most interest for network studies. But because our treatment will generally be of an algebraic nature, the results are almost all valid for discrete-time systems, which in fact have considerable practical importance, for example, through the theory of automata.

In our treatment we have not proceeded in the most rigorous manner possible since we wish to bring out only the basic and most important points for our later use. Once the concepts we have treated are grasped in principle, the more detailed works are available to those interested [1],[6]. However we have not wished to sacrifice completely the rigor of the theory so have proceeded in a rather precise manner for the detail given. Although most of our emphasis will be upon networks, we have given a somewhat general systems formulation in order not to overly limit the treatment. As a consequence we will most frequently work with a network in an input-output situation, as for example through the admittance matrix where the input $\underset{\sim}{u}$ is the set of port voltages $\underset{\sim}{v}$, and the output $\underset{\sim}{y}$ the port currents $\underset{\sim}{i}$ (in which case $m = n$). Since such a (port) description tells very little about the internal structure we will use the state to discuss internal operation and construction of the network. A <u>network</u> is a system with electrical inputs and outputs.

It is of interest to know means of obtaining the canonical equations so we next turn to a discussion of the setting up of state variable equations.

G. References

1. Zadeh, L. A., and C. A. Desoer, "Linear System Theory," McGraw-Hill, New York, 1963.
2. Newcomb, R. W., "Concepts of Linear Systems and Controls," Brooks/Cole, Belmont, Calif., 1968.
3. Schwartz, L., "Théorie des noyaux," <u>Proc. Intern. Congr. of Mathematicians</u>, Cambridge, Mass., 1950, pp. 220-230.
4. Newcomb, R. W., "Linear Multiport Synthesis," McGraw-Hill, New York, 1966.
5. Newcomb, R. W., "Active Integrated Circuit Synthesis," Prentice-Hall, Englewood Cliffs, N. J. 1968.
6. Kalman, R. E., "Algebraic Structure of Linear Dynamical Systems," Proceedings of the National Academy of Science, USA, to appear.

H. Exercises

1. Set up the canonical equations for the Hazony section of Fig. EI-1. Do this for the input-output variables of Eq. (I-9a) as well as for the admittance and impedance matrices as transfer functions.

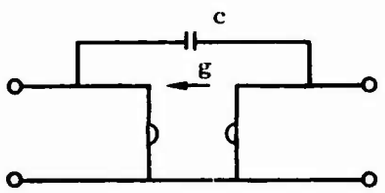

Fig. EI-1. HAZONY SECTION.

*2. Given the canonical equations for the admittance matrix (as the transfer function) and those for the impedance matrix, find the relations between the two realization set matrices. Repeat for the scattering matrix and the admittance matrix given.

3. A given network has the canonical equations

$$\dot{\underset{\sim}{s}} = \begin{bmatrix} 0 & -1 \\ 3 & 0 \end{bmatrix} \underset{\sim}{s} + \begin{bmatrix} 1 \\ 0 \end{bmatrix} u \qquad \text{(EI-1a)}$$

$$y = \begin{bmatrix} 1 & -1 \end{bmatrix} \underset{\sim}{s} + \begin{bmatrix} 2 \end{bmatrix} u \qquad \text{(EI-1b)}$$

a. Find the transfer function.

b. Find the zero input response for $\underset{\sim}{s}(t_o) = \begin{bmatrix} 1 \\ -2 \end{bmatrix}$. Plot the trajectory $\underset{\sim}{s}(t)$ in state space.

*4. Discuss a formulation for "transfer functions" in terms of the realization matrices for time-variable networks.

5. As we have mentioned, the state applies to much more than scientific or physical systems. Investigate the concept in terms of, for example, language formation or motion picture production.

6. Consider any network of interest and set up the appropriate state space equations. From these, investigate the minimality of the realization as well as other sets of canonical equations yielding the desired transfer function.

Mais d'autres s'attardent un peu, nous regardent en souriant attentivement, semblant sur le point d'avouer qu'ils ont tout compris.

M. Maeterlinck
"Les Avertis" du "Trésor des Humbles"

CHAPTER II

FORMULATION OF CANONICAL EQUATIONS

A. Summary

By the use of appropriate replacements and capacitor extractions a simple method of equation formulation suitable for digital computer use is presented; the method is described in terms of the admittance description but can be used in other situations. This method is followed by the outline of a topological one which exhibits a more general set of equations.

B. Capacitor Extractions

Let us consider as given a finite circuit, that is, a connection of a finite number of resistors, capacitors, inductors, transformers, gyrators, and devices, such as transistors, which can be modeled by the above elements. (We assume linear but perhaps time-variable and active elements at this point; that is, negative as well as positive element values which may vary with time are allowed.) To illustrate the method, we search for the canonical state variable equations for the admittance matrix as transfer function [1]. To concentrate on fundamental concepts, we replace all inductors by the capacitor-loaded gyrator equivalent shown in Fig. II-1.

After making such a replacement we extract all capacitors into a separate network which loads a multiport described completely by algebraic constraints. If the admittance matrix is $n \times n$ and if there are c capacitors extracted, the situation is shown in Fig. II-2, where the "resistive" $(n + c)$-port is loaded by a capacitive c-port.

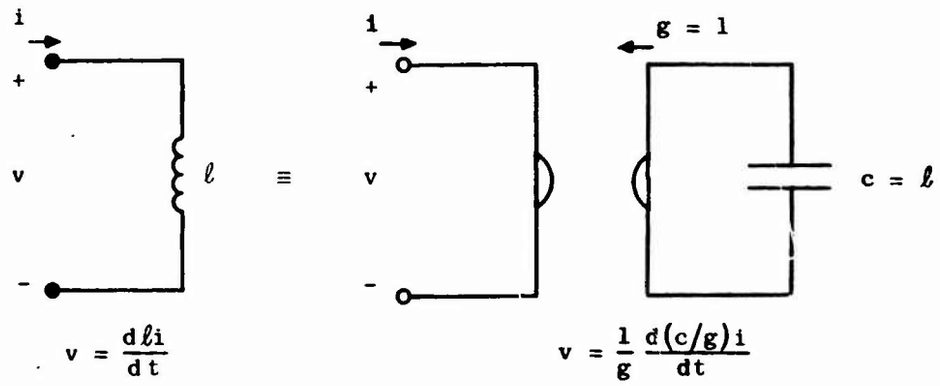

(a) (b)

Fig. II-1. INDUCTOR EQUIVALENT.

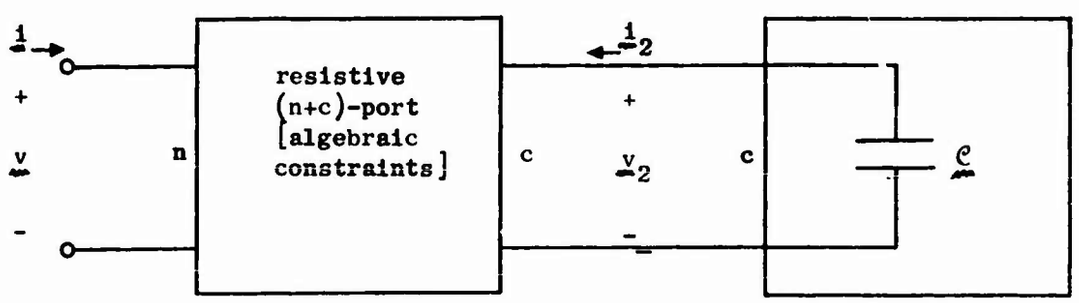

Fig. II-2. CAPACITOR EXTRACTION.

Our reason, of course, for isolating the capacitors is that their charges, or voltages, can serve as state variables. We can obtain a general description, that is, an $\mathcal{A}\,\mathbf{v} = \mathcal{B}\,\mathbf{i}$ characterization, for the resistive (n + c)-port, but let us assume that this (n + c)-port also possesses an admittance description $\mathbf{Y}_c$, where since we are allowing the presence of time-variable circuit elements, we have that $\mathbf{Y}_c = \mathbf{Y}_c(t)$. In order to be able to apply the load constraints to obtain the state-variable description, we can partition $\mathbf{Y}_c$ according to the ports.

$$\begin{bmatrix} \mathbf{i} \\ \mathbf{i}_2 \end{bmatrix} = \mathbf{Y}_c \begin{bmatrix} \mathbf{v} \\ \mathbf{v}_2 \end{bmatrix} = \begin{bmatrix} \mathbf{y}_{11} & \mathbf{y}_{12} \\ \mathbf{y}_{21} & \mathbf{y}_{22} \end{bmatrix} \begin{bmatrix} \mathbf{v} \\ \mathbf{v}_2 \end{bmatrix} \qquad \text{(II-1)}$$

We point out that the existence of $\underset{\sim}{Y}_c$ is an assumption of the theory, and one which places a restriction (which is often not too severe) on the class of circuits considered.

At this point it is convenient to rewrite the above equations in a partitioned form more useful for finding the canonical equations. Thus,

$$\begin{bmatrix} \underset{\sim}{1}_n \\ \\ \underset{\sim}{0} \end{bmatrix} \begin{bmatrix} \underset{\sim}{i} \end{bmatrix} + \begin{bmatrix} \underset{\sim}{0} \\ \\ \underset{\sim}{1}_c \end{bmatrix} \begin{bmatrix} \underset{\sim}{i}_2 \end{bmatrix} - \begin{bmatrix} \underset{\sim}{y}_{11} \\ \\ \underset{\sim}{y}_{21} \end{bmatrix} \begin{bmatrix} \underset{\sim}{v} \end{bmatrix} - \begin{bmatrix} \underset{\sim}{y}_{12} \\ \\ \underset{\sim}{y}_{22} \end{bmatrix} \begin{bmatrix} \underset{\sim}{v}_2 \end{bmatrix} = \begin{bmatrix} \underset{\sim}{0} \\ \\ \underset{\sim}{0} \end{bmatrix} \qquad \text{(II-2a)}$$

Next we observe that we should be able to choose the capacitor charge as the state, in which case we define

$$\underset{\sim}{s} = \underset{\sim}{C}\, \underset{\sim}{v}_2 \qquad \text{(II-2b)}$$

while from the load constraint we observe

$$\underset{\sim}{i}_2 = -\dot{\underset{\sim}{s}} = -\frac{d\, \underset{\sim}{C}\, \underset{\sim}{v}_2}{dt} \qquad \text{(II-2c)}$$

Here we have taken the matrix $\underset{\sim}{C}$ as the $c \times c$ diagonal matrix of capacitance values; any capacitive coupling we assume to have been taken into account through transformers absorbed into the resistive $(n + c)$-port. We also assume $\underset{\sim}{C}(t)$ to be nonsingular. (Any singularity can actually be accounted for again by a change in the $(n + c)$-port, but we omit discussion of this rather tricky point in order to clearly proceed.) Substituting the (b) and (c) portions of Eq. (II-2) into the (a) one yields

$$\begin{bmatrix} \underset{\sim}{1}_n \\ \\ \underset{\sim}{0} \end{bmatrix} \begin{bmatrix} \underset{\sim}{i} \end{bmatrix} - \begin{bmatrix} \underset{\sim}{0} \\ \\ \underset{\sim}{1}_c \end{bmatrix} \begin{bmatrix} \dot{\underset{\sim}{s}} \end{bmatrix} - \begin{bmatrix} \underset{\sim}{y}_{11} \\ \\ \underset{\sim}{y}_{21} \end{bmatrix} \begin{bmatrix} \underset{\sim}{v} \end{bmatrix} - \begin{bmatrix} \underset{\sim}{y}_{12}\, \underset{\sim}{C}^{-1} \\ \\ \underset{\sim}{y}_{22}\, \underset{\sim}{C}^{-1} \end{bmatrix} \begin{bmatrix} \underset{\sim}{s} \end{bmatrix} = \begin{bmatrix} \underset{\sim}{0} \\ \\ \underset{\sim}{0} \end{bmatrix} \qquad \text{(II-3)}$$

The second set of (c) equations gives the derivative portion of the canonical equations, while the first set of n equations gives the output portion. Thus,

$$\dot{\underset{\sim}{s}} = -\underset{\sim}{y}_{22}\, \underset{\sim}{c}^{-1}\, \underset{\sim}{s} - \underset{\sim}{y}_{21}\, \underset{\sim}{v} \tag{11-4a}$$

$$\underset{\sim}{i} = \underset{\sim}{y}_{12}\, \underset{\sim}{c}^{-1}\, \underset{\sim}{s} + \underset{\sim}{y}_{11}\, \underset{\sim}{v} \tag{11-4b}$$

We have obtained the realization

$$R = \left\{ -\underset{\sim}{y}_{22}\, \underset{\sim}{c}^{-1},\ \underset{\sim}{y}_{21},\ \underset{\sim}{y}_{12}\, \underset{\sim}{c}^{-1},\ \underset{\sim}{y}_{11} \right\} \tag{II-4c}$$

in a simple manner. It is worth mentioning that if time-variable elements are present the realization matrices are functions of time, in which case we have succeeded in setting up the canonical state-variable equations for time-variable circuits. In the time-invariant situation we observe that the method proceeds only when there is no pole in the (n-port) admittance matrix at infinity; we will later (Sec. C) obtain a graph theory condition for no pole at infinity such that a test can be directly made on the circuit graph. In any case, time-variable or not, the method proceeds if and only if the coupling admittance matrix $\underset{\sim}{Y}_c$ exists; the existence of $\underset{\sim}{Y}_c$ is equivalent to the existence of the inverse of the $\underset{\sim}{\mathfrak{B}}$ matrix in the general description, $\underset{\sim}{\mathfrak{A}}\, \underset{\sim}{v} = \underset{\sim}{\mathfrak{B}}\, \underset{\sim}{i}$, for the (n + c)-port coupling network.

As an example, let us consider the 2-port of Fig. II-3, which is a subportion of the nonreciprocal Brune section, useful for its own sake (since it is equivalent to a series inductor in cascade with a transformer).

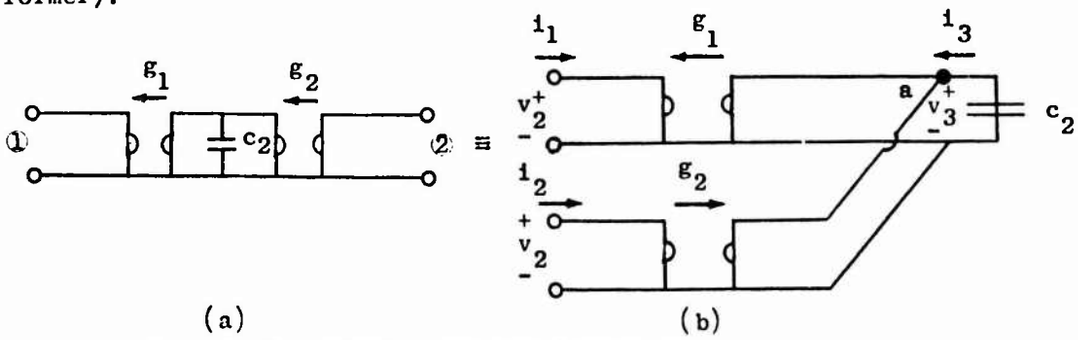

Fig. II-3. SHUNT-CAPACITOR LOADED-GYRATOR CASCADE.

By extracting the capacitor as shown in the (b) portion of the figure, we can obtain the appropriate equations. First we write the general description for the 3-port coupling structure (by respectively summing currents at node a and then writing i_1 and i_2 in terms of v_3 through the gyrator relationships).

$$\begin{bmatrix} -g_1 & g_2 & 0 \\ 0 & 0 & g_1 \\ 0 & 0 & -g_3 \end{bmatrix} \begin{bmatrix} v_1 \\ v_2 \\ v_3 \end{bmatrix} = \begin{bmatrix} 0 & 0 & 1 \\ 1 & 0 & 0 \\ 0 & 1 & 0 \end{bmatrix} \begin{bmatrix} i_1 \\ i_2 \\ i_3 \end{bmatrix} \qquad \text{(II-5a)}$$

The coefficient matrix of the currents is nonsingular, being a permutation matrix, and thus on premultiplying Eq. (II-5a) by its inverse we find

$$\underset{\sim}{Y}_c = \begin{bmatrix} 0 & 1 & 0 \\ 0 & 0 & 1 \\ 1 & 0 & 0 \end{bmatrix} \begin{bmatrix} -g_1 & g_2 & 0 \\ 0 & 0 & g_1 \\ 0 & 0 & -g_3 \end{bmatrix} = \left[\begin{array}{cc|c} 0 & 0 & g_1 \\ 0 & 0 & -g_2 \\ \hline -g_1 & g_2 & 0 \end{array}\right] \qquad \text{(II-5b)}$$

where we have made the partition appropriate to Eq. (II-1). Note that $\underset{\sim}{Y}_c$ is skew-symmetric, $\underset{\sim}{Y}_c = -\tilde{\underset{\sim}{Y}}_c$ (where $\sim$ means transpose), as expected, since it is constructed solely from gyrators.

Equation (II-3) is directly

$$\left[\begin{array}{cc} 1 & 0 \\ 0 & 1 \\ \hline 0 & 0 \end{array}\right] \begin{bmatrix} i_1 \\ i_2 \end{bmatrix} - \left[\begin{array}{c} 0 \\ 0 \\ \hline 1 \end{array}\right] [\dot{s}] - \left[\begin{array}{cc} 0 & 0 \\ 0 & 0 \\ \hline -g_1 & g_2 \end{array}\right] \begin{bmatrix} v_1 \\ v_2 \end{bmatrix} - \left[\begin{array}{c} g_1/c_2 \\ -g_2/c_2 \\ \hline 0 \end{array}\right] [s] = \left[\begin{array}{c} 0 \\ 0 \\ \hline 0 \end{array}\right] \qquad \text{(II-5c)}$$

where we have partitioned the last $c = 1$ equations to be split off. Thus we have, by such a split, the canonical equations directly as

$$\dot{s} = 0 \cdot s + [g_1 \ \ -g_2] \begin{bmatrix} v_1 \\ v_2 \end{bmatrix} \qquad \text{(II-5d)}$$

$$\begin{bmatrix} i_1 \\ i_2 \end{bmatrix} = \begin{bmatrix} g_1/c_2 \\ g_2/c_2 \end{bmatrix} s + \begin{bmatrix} 0 & 0 \\ 0 & 0 \end{bmatrix} \begin{bmatrix} v_1 \\ v_2 \end{bmatrix} \tag{II-5e}$$

We comment that, since the nonreciprocal Brune section itself has a pole at infinity, no $\underset{\sim}{Y}_{wc}$ exists for it. However, on removal of the pole at infinity, Eqs. (II-5) result; hence the canonical equations for the admittance description of the Brune section are merely obtained from Eqs. (II-5d,e) by adding

$$\begin{bmatrix} c_1 & -c_1 \\ -c_1 & c_1 \end{bmatrix} \begin{bmatrix} \dot{v}_1 \\ \dot{v}_2 \end{bmatrix}$$

to the right of Eq. (II-5e). Note also that the canonical equations previously found for the Brune section were for a different set of input-output variables (that is, a different system). Still the same method was applied at that point.

We also comment that, upon adding suitable ports and ignoring variables of no interest, we can use the same method to find almost any input-output canonical set of state-variable equations, perhaps also after simple transformations on the variables. This result is directly seen by setting up equations in hybrid form.

Since the steps carried out are easily programmed, the procedure is a very convenient one for use in setting up canonical equations on a digital computer. For such purposes one needs a method for obtaining the coupling admittance $\underset{\sim}{Y}_{wc}$ on the computer. Perhaps the most co e-nient method is to reduce the indefinite admittance matrix [2, p. 8] for the resistive coupling network to obtain $\underset{\sim}{Y}_{wc}$; several programs are available for finding the indefinite admittance matrix, but a program is also very easily written from scratch. An alternate and almost equally useful method is to use the topological methods which we now discuss.

C. Topological Formulation

Let us again consider a finite circuit for which the equivalence of Fig. II-1 is used to replace inductors; again this replacement is not necessary but is convenient for simplification of already complicated expressions. Also we will assume that the admittance description is desired for which voltage sources have been placed at the ports.

By replacing each circuit element branch by a line segment, with an arbitrarily assigned orientation, as shown in Fig. II-4, we obtain an oriented graph to represent the circuit, the branches of which we can

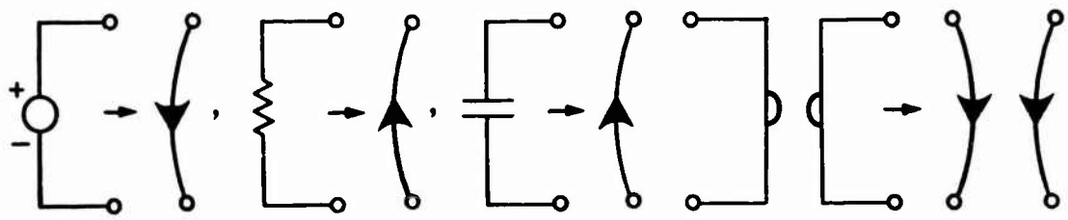

Fig. II-4. EXAMPLE GRAPH REPLACEMENTS.

number in some useful manner. A graph associated with a network or circuit structure will be called a network graph.

In order to proceed we introduce the following somewhat standard nomenclature associated with a network graph:

node=vertex	a dot on the graph (= a terminal of a circuit element branch)
branch	a line connecting two nodes (= a circuit element branch)
path	a sequence of branches and associated nodes
connected graph	a network graph in which every node is connected to every other node by a path
separate part	a maximally connected subgraph (that is, a subgraph for which all branches are connected to all other branches in the subgraph and to no others)
tree	a maximally connected subgraph of a separate part which contains no closed path
forest	a collection of trees of a graph, one for each separate part
cotree	the set of branches (in a separate part) which remain when a (fixed) tree is deleted
link	a branch of a (fixed) cotree

Although these definitions are not completely rigorous (for example "connected" and "closed path" are not made precise), they should be intuitively clear, perhaps after an example, and are sufficient for our purposes. To further proceed we introduce the following symbols:

b = total number of branches

ℓ = total number of links (cotree branches)

s = number of separate parts

t = total number of tree branches

v = total number of nodes

Here ℓ and t are formed by summing over all trees in a forest. For each separate part the number of tree branches is one less than the number of nodes while it is also clear that $b = \ell + t$. Thus we can directly predict the number of tree branches and links, without expressly exhibiting a tree, through

$$t = v - s, \qquad \ell = b - v + s \tag{II-6}$$

As an example, let us consider the 2-port of Fig. II-5 which has been closed, as mentioned above, on voltage sources (as will be appropriate to setting up the canonical equations; note that this network is identical in port behavior to the nonreciprocal Brune section of Fig. I-5). A possible network graph is shown in the (b) portion, with other graphs resulting by different choices of branch orientation and numbering. Note that by simple count $b = 8$, $s = 2$, $v = 5$, and thus, by Eq. (II-6), $t = 3$ and $\ell = 5$; these numbers are checked from the graph where a possible choice for a tree is shown in boldface (note that there are other choices for a tree, but that in a given analysis only one at a time is need).

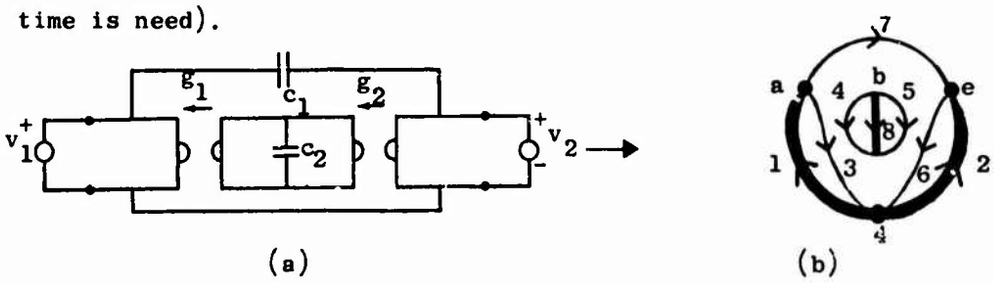

Fig. II-5 EXAMPLE GRAPH FROM CIRCUIT STRUCTURE.

Since we will wish to sum currents at the nodes, we have also labeled them. We observe that for a node analysis we wish to choose tree branch voltages as independent variables while for a loop analysis we wish to choose link currents. In setting up the state-variable equations we actually will work with both types of variables.

Next we introduce the following (column) vector variables:

$\underset{\sim}{i}_b$ = vector of branch currents $(b \times 1)$

$\underset{\sim}{v}_b$ = vector of branch voltages $(b \times 1)$

$\underset{\sim}{i}_\ell$ = vector of link currents $(\ell \times 1)$

$\underset{\sim}{v}_t$ = vector of tree branch voltages $(t \times 1)$

$\underset{\sim}{v}$ = vector of port (source) voltages $(n \times 1)$

$\underset{\sim}{i}$ = vector of port currents $(n \times 1)$

Along with these variables we assume the polarity of a given branch's variables in conjunction with the given branch orientation as shown in Fig. II-6.

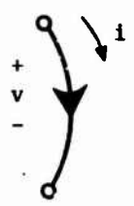

Fig. II-6. POLARITY OF VARIABLES.

Now we introduce the cut set and tie set matrices from which the analysis can truly begin. For a given circuit we pick a fixed forest. The cut set matrix $\underset{\sim}{C}$ is defined by considering the tree branches in numerical order; for each tree branch a circle (or similar curve) is drawn such that of all the tree branches only the prescribed one is cut by the circle. The (oriented) set of branches cut by any one circle is called a <u>cut set</u>. For any one cut set all the currents entering the circle on the cut set branches must sum to zero by Kirchhoff's current law; considering all t cut sets we obtain

$$\underset{\sim}{0} = \underset{\sim}{C}\,\underset{\sim}{i}_b \qquad \text{(II-7)}$$

where $\underset{\sim}{C}$ is the $t \times b$ <u>cut set matrix</u> (consisting of 0 or $\pm$ 1's). As an example, Fig. II-7 shows the cuts for the particular graph. The

resulting cut set matrix is given as the coefficient matrix in the equation

$$\begin{array}{l} \text{cut I} \rightarrow \\ \text{cut II} \rightarrow \\ \text{cut III} \rightarrow \end{array} \begin{bmatrix} 0 \\ 0 \\ 0 \end{bmatrix} = \begin{bmatrix} 1 & 0 & 0 & 0 \\ 0 & 1 & 1 & 0 \\ 0 & -1 & 0 & -1 \end{bmatrix} \begin{bmatrix} i_1 \\ i_2 \\ i_3 \\ i_4 \end{bmatrix} \qquad \text{(II-8)}$$

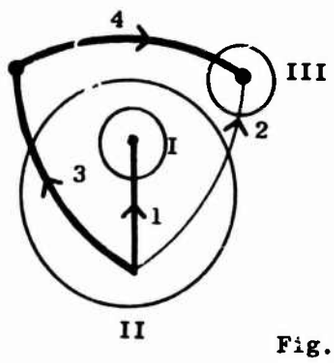

cut set I = branch 1

cut set II = branch 2 (out) and branch 3 (out)

cut set III = branch 2 (in) and branch 4 (in)

Fig. II-7. EXAMPLE CUTS FOR $\underset{\sim}{c}$.

The tie set matrix $\underset{\sim}{\mathfrak{J}}$ is defined in a somewhat dual manner. Again a forest is chosen. On removing all links a particular link is reinserted; the (oriented) branches forming a closed path under this reinsertion are the associated tie set. Ordering all tie sets according to the numerical order of the links defines, through Kirchhoff's voltage law (applied to each loop of tie set branches),

$$\underset{\sim}{0} = \underset{\sim}{\mathfrak{J}}\, \underset{\sim}{v}_b \qquad \text{(II-9)}$$

where $\underset{\sim}{\mathfrak{J}}$ is the $\ell \times b$ <u>tie set matrix</u> (again consisting of 0 or $\pm$ 1's). For example, Fig. II-8 has

$$\begin{bmatrix} 0 \\ 0 \end{bmatrix} = \begin{bmatrix} 1 & 1 & 0 & 0 \\ 1 & 0 & 1 & -1 \end{bmatrix} \begin{bmatrix} v_1 \\ v_2 \\ v_3 \\ v_4 \end{bmatrix} \qquad \text{(II-10)}$$

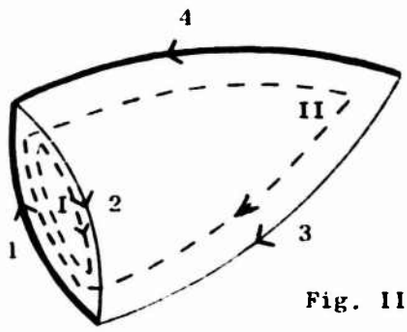

tie set I = branch 2 (+) and branch 1 (+)

tie set II = branch 3 (+), branch 1 (+) and branch 4 (-)

Fig. II-8. EXAMPLE TIES FOR $\mathcal{J}$.

We also claim that it is possible to write (recall that $\tilde{}$ = transpose)

$$\mathbf{v}_b = \tilde{\mathcal{C}}\, \mathbf{v}_t \tag{II-11a}$$

$$\mathbf{i}_b = \tilde{\mathcal{J}}\, \mathbf{i}_\ell \tag{II-11b}$$

For the plausibility of Eq. (II-11a), say, let us argue as follows. By Kirchhoff's voltage law it should be clear that the tree branch voltages determine all link voltages; hence there is a linear transformation to give $\mathbf{v}_b = \mathbf{A}\, \mathbf{v}_t$, where $\mathbf{A}$ is some $b \times t$ matrix in fact consisting of zeros and (+ or -) ones. If we consider the graph as a closed system then the total input power is zero, $P_{in} = \tilde{\mathbf{v}}_b\, \mathbf{i}_b = 0$. Thus $\tilde{\mathbf{v}}_b\, \mathbf{i}_b = \tilde{\mathbf{v}}_t\, \tilde{\mathbf{A}}\, \mathbf{i}_b = 0$. Since the tree branch voltages can be arbitrarily assigned (when the graph is considered as an abstract object), we must require $\tilde{\mathbf{A}}\, \mathbf{i}_b = \mathbf{0}$. In other words if we choose Eq. (II-11a), then Eq. (II-7) follows as a possibility. [Of course, a proof requires that we argue in reverse, but this can be done by beginning with Eqs. (II-11) at first.]

For convenience of notation we next choose a numbering of branches such that all the branches occur first; thus

$$\mathbf{v}_b = \begin{bmatrix} \mathbf{v}_t \\ \\ \mathbf{v}_\ell \end{bmatrix}, \qquad \mathbf{i}_b = \begin{bmatrix} \mathbf{i}_t \\ \\ \mathbf{i}_\ell \end{bmatrix} \tag{II-11c}$$

in which case Eqs. (II-11a,b) show that the cut set and tie set matrices can be partitioned as

$$\underset{\sim}{C} = [\underset{\sim}{1}_t \mid \underset{\sim}{C}] , \qquad \underset{\sim}{\mathcal{T}} = [\underset{\sim}{T} \mid \underset{\sim}{1}_\ell] \tag{II-11d}$$

where $\underset{\sim}{C}$ and $\underset{\sim}{T}$ are, respectively $t \times \ell$ and $\ell \times t$ matrices; $\underset{\sim}{1}_t$ is, of course, the $t \times t$ identity. We observe that

$$\underset{\sim}{C} = - \tilde{\underset{\sim}{T}} \tag{II-11e}$$

since again

$$\tilde{\underset{\sim}{v}}_b \underset{\sim}{i}_b = 0 = \tilde{\underset{\sim}{v}}_t [\underset{\sim}{1}_t \ \underset{\sim}{C}] \begin{bmatrix} \tilde{\underset{\sim}{T}} \\ \underset{\sim}{1}_\ell \end{bmatrix} \underset{\sim}{i}_\ell = \tilde{\underset{\sim}{v}}_t [\tilde{\underset{\sim}{T}} + \underset{\sim}{C}] \underset{\sim}{i}_\ell = 0$$

and $\underset{\sim}{v}_t$ and $\underset{\sim}{i}_\ell$ can be arbitrarily assigned.

Our next step is to place all voltage sources in tree branches. (We remark that we are only considering the presence of voltage sources; if current sources are present, only simple modifications are necessary, or one can use the equivalence of Fig. II-9.) Next we place as many

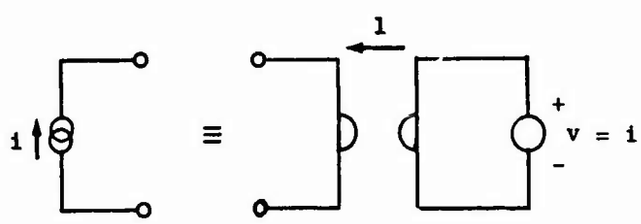

Fig. II-9. CURRENT SOURCE EQUIVALENT.

as possible of the capacitors in tree branches--any left over are somehow "excess"; but the need for considering these excess capacitors is in fact the reason for our treating this topological method. It follows that if there is a capacitor link then the path formed by the associated tie set branches consists entirely of voltage sources and capacitors--such gives rise to a pole at infinity, for example, in the admittance matrix. Let us now further fix our numbering of branches such that $\underset{\sim}{v}_t$ and $\underset{\sim}{v}_\ell$ take the form

$$\underset{\sim}{v}_t = \begin{bmatrix} \underset{\sim}{v} \\ \underset{\sim}{v}_{ct} \\ \underset{\sim}{v}_{rt} \end{bmatrix} \quad , \quad \underset{\sim}{v}_\ell = \begin{bmatrix} \underset{\sim}{v}_{c\ell} \\ \underset{\sim}{v}_{r\ell} \end{bmatrix} \tag{11-12}$$

where the subscripts c and r refer to capacitor and resistor portions of the graph.

At this point we can begin the real procedure for setting up the state-variable equations [3]. If we partition the matrix $\underset{\sim}{T}$, of Eq. (II-11d), using $\underset{\sim}{C} = -\tilde{\underset{\sim}{T}}$, we find for Eq. (II-9), $\underset{\sim}{0} = \underset{\sim}{\mathcal{J}}\underset{\sim}{v}_b$, and for Eq. (II-7), $\underset{\sim}{0} = \underset{\sim}{C}\,\underset{\sim}{i}_b$

$$\begin{array}{c} c\ell \rightarrow \\ \\ r\ell \rightarrow \end{array} \begin{bmatrix} \underset{\sim}{0} \\ \\ \underset{\sim}{0} \end{bmatrix} = \left[\begin{array}{ccc|cc} \underset{\sim}{T}_{11} & \underset{\sim}{T}_{12} & \underset{\sim}{0} & \underset{\sim}{1}_{c\ell} & \underset{\sim}{0} \\ \\ \underset{\sim}{T}_{21} & \underset{\sim}{T}_{22} & \underset{\sim}{T}_{23} & \underset{\sim}{0} & \underset{\sim}{1}_{r\ell} \end{array}\right] \begin{bmatrix} \underset{\sim}{v} \\ \underset{\sim}{v}_{ct} \\ \underset{\sim}{v}_{rt} \\ \underset{\sim}{v}_{c\ell} \\ \underset{\sim}{v}_{r\ell} \end{bmatrix} \tag{II-13a}$$

$$\begin{array}{c} \text{source} \rightarrow \\ ct \rightarrow \\ rt \rightarrow \end{array} \begin{bmatrix} \underset{\sim}{0} \\ \underset{\sim}{0} \\ \underset{\sim}{0} \end{bmatrix} = \left[\begin{array}{ccc|cc} \underset{\sim}{1}_n & \underset{\sim}{0} & \underset{\sim}{0} & -\tilde{\underset{\sim}{T}}_{11} & -\tilde{\underset{\sim}{T}}_{21} \\ \underset{\sim}{0} & \underset{\sim}{1}_{ct} & \underset{\sim}{0} & -\tilde{\underset{\sim}{T}}_{12} & -\tilde{\underset{\sim}{T}}_{22} \\ \underset{\sim}{0} & \underset{\sim}{0} & \underset{\sim}{1}_{rt} & \underset{\sim}{0} & -\tilde{\underset{\sim}{T}}_{23} \end{array}\right] \begin{bmatrix} \underset{\sim}{i}_s \\ \underset{\sim}{i}_{ct} \\ \underset{\sim}{i}_{rt} \\ \underset{\sim}{i}_{c\ell} \\ \underset{\sim}{i}_{r\ell} \end{bmatrix} \tag{II-13b}$$

In these equations $\underset{\sim}{T}_{13} = \underset{\sim}{0}$ since if there is a capacitor in a link then there is no resistor in the tree branches of the associated tie set. We also write $\underset{\sim}{i}_s$ for the source current and note $\underset{\sim}{i}_s = -\underset{\sim}{i}$, where $\underset{\sim}{i}$ is the port current.

The circuit element constraints are next assumed to be of the form

$$\begin{bmatrix} \underline{i}_{ct} \\ \underline{i}_{c\ell} \\ \underline{i}_{rt} \\ \underline{i}_{r\ell} \end{bmatrix} = \begin{bmatrix} d\underline{C}_t \underline{v}_{ct}/dt \\ d\underline{C}_\ell \underline{v}_{c\ell}/dt \\ \underline{G}_t \underline{v}_{rt} \\ \underline{G}_\ell \underline{v}_{r\ell} \end{bmatrix} \qquad \text{(II-14a)}$$

In actual fact this form places some restrictions on the types of circuits allowed since no coupling between tree branch and link resistive (gyrator) elements is allowed; for example, the circuit of Fig. II-10 is ruled out. Of course a more general treatment is possible by using

$$\begin{bmatrix} \underline{i}_{rt} \\ \underline{i}_{r\ell} \end{bmatrix} = \begin{bmatrix} \underline{G}_t & \underline{G}_{t\ell} \\ \underline{G}_{\ell t} & \underline{G}_\ell \end{bmatrix} \begin{bmatrix} \underline{v}_{rt} \\ \underline{v}_{r\ell} \end{bmatrix} \qquad \text{(II-14b)}$$

but as we will see, the result is already complicated enough in notation.

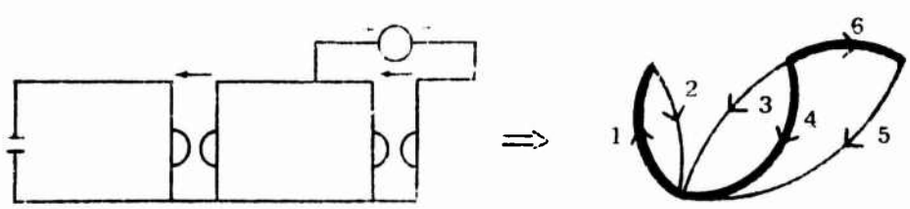

note: 1 and 6 are required tree branches

Fig. II-10. EXAMPLE OF RESISTIVE COUPLING BETWEEN TREE BRANCHES.

Our next job is to make appropriate substitutions, etc. Through the various equations indexed as shown we can write the right side of Eq. (II-14a) as

$$
\begin{array}{r}
\text{identity} \rightarrow \\
\\
\text{differentiate } c\ell \rightarrow \\
\\
\text{identity} \rightarrow \\
\\
r\ell \rightarrow
\end{array}
\begin{bmatrix} d\underset{\sim}{C}_t \underset{\sim}{v}_{ct}/dt \\ \\ d\underset{\sim}{C}_\ell \underset{\sim}{v}_{c\ell}/dt \\ \\ \underset{\sim}{G}_t \underset{\sim}{v}_{rt} \\ \\ \underset{\sim}{G}_\ell \underset{\sim}{v}_{r\ell} \end{bmatrix}
=
\begin{bmatrix}
\underset{\sim}{0} & \underset{\sim}{0} & \underset{\sim}{0} & \underset{\sim}{1}_{ct} & \underset{\sim}{0} \\
-\dfrac{d\underset{\sim}{C}_i}{dt}\underset{\sim}{T}_{11} & -\dfrac{d\underset{\sim}{C}_\ell \underset{\sim}{T}_{12}\underset{\sim}{C}_t^{-1}}{dt} & -\underset{\sim}{C}_\ell \underset{\sim}{T}_{11} & -\underset{\sim}{C}_\ell \underset{\sim}{T}_{12}\underset{\sim}{C}_t^{-1} & \underset{\sim}{0} \\
\underset{\sim}{0} & \underset{\sim}{0} & \underset{\sim}{0} & \underset{\sim}{0} & \underset{\sim}{1}_{rt} \\
-\underset{\sim}{G}_\ell \underset{\sim}{T}_{21} & -\underset{\sim}{G}_\ell \underset{\sim}{T}_{22}\underset{\sim}{C}_t^{-1} & \underset{\sim}{0} & \underset{\sim}{0} & -\underset{\sim}{G}_\ell \underset{\sim}{T}_{23}\underset{\sim}{C}_t^{-1}
\end{bmatrix}
\tag{II-15a}
$$

$$
\times
\begin{bmatrix} \underset{\sim}{v} \\ \\ \underset{\sim}{C}_t \underset{\sim}{v}_{ct} \\ \\ d\underset{\sim}{v}/dt \\ \\ d\underset{\sim}{C}_t \underset{\sim}{v}_{ct}/dt \\ \\ \underset{\sim}{G}_t \underset{\sim}{v}_{rt} \end{bmatrix}
$$

while the left side can be expressed as

$$
ct \rightarrow \begin{bmatrix} \underset{\sim}{1}_{ct} & -\tilde{\underset{\sim}{T}}_{12} & \underset{\sim}{0} & \underset{\sim}{0} \end{bmatrix}
\begin{bmatrix} \underset{\sim}{i}_{ct} \\ \underset{\sim}{i}_{c\ell} \\ \underset{\sim}{i}_{rt} \\ \underset{\sim}{i}_{r\ell} \end{bmatrix}
= \tilde{\underset{\sim}{T}}_{22}\underset{\sim}{i}_{r\ell} = \tilde{\underset{\sim}{T}}_{22}\underset{\sim}{G}_\ell \underset{\sim}{v}_{r\ell}
\tag{II-15b}
$$

Substituting Eqs. (II-15a,b) into (II-14a) yields desirable equations with $\underset{\sim}{v}_{c\ell}$ eliminated; but the presence of $\underset{\sim}{v}_{rt}$ and $\underset{\sim}{v}_{r\ell}$ is unwanted so we proceed to eliminate them also. We have

$$
r\ell \rightarrow \underset{\sim}{v}_{r\ell} = -\begin{bmatrix} \underset{\sim}{T}_{21} & \underset{\sim}{T}_{22} & \underset{\sim}{T}_{23} \end{bmatrix}
\begin{bmatrix} \underset{\sim}{v} \\ \underset{\sim}{v}_{ct} \\ \underset{\sim}{v}_{rt} \end{bmatrix}
\tag{II-15c}
$$

and

$$rt \rightarrow \underset{\sim}{i}_{rt} = \tilde{\underset{\sim}{T}}_{23}\underset{\sim}{i}_{r\ell} = \tilde{\underset{\sim}{T}}_{23}\underset{\sim}{G}_{\ell}\underset{\sim}{v}_{r\ell} = \underset{\sim}{G}_{t}\underset{\sim}{v}_{rt} \qquad \text{(II-15d)}$$

Combining these last two gives

$$\underset{\sim}{v}_{rt} = -\underset{\sim}{G}_{t}^{-1}\,\tilde{\underset{\sim}{T}}_{23}\underset{\sim}{G}_{\ell}\left[\underset{\sim}{T}_{21} \quad \underset{\sim}{T}_{22} \quad \underset{\sim}{T}_{23}\right]\begin{bmatrix}\underset{\sim}{v}\\ \underset{\sim}{v}_{ct}\\ \underset{\sim}{v}_{rt}\end{bmatrix}$$

which on solution for $\underset{\sim}{v}_{rt}$ gives

$$\underset{\sim}{v}_{rt} = -\left(\underset{\sim}{1}_{rt} + \underset{\sim}{G}_{t}^{-1}\tilde{\underset{\sim}{T}}_{23}\underset{\sim}{G}_{\ell}\underset{\sim}{T}_{23}\right)^{-1}\underset{\sim}{G}_{t}^{-1}\tilde{\underset{\sim}{T}}_{23}\underset{\sim}{G}_{\ell}\left[\underset{\sim}{T}_{21} \quad \underset{\sim}{T}_{22}\underset{\sim}{C}_{t}^{-1}\right]\begin{bmatrix}\underset{\sim}{v}\\ \underset{\sim}{C}_{t}\underset{\sim}{v}_{ct}\end{bmatrix} \qquad \text{(II-15e)}$$

Equation (II-15c) then gives

$$\underset{\sim}{v}_{r\ell} = \left[-\underset{\sim}{1}_{r\ell} + \underset{\sim}{T}_{23}\left(\underset{\sim}{1}_{rt} + \underset{\sim}{G}_{t}^{-1}\tilde{\underset{\sim}{T}}_{23}\underset{\sim}{G}_{\ell}\underset{\sim}{T}_{23}\right)^{-1}\underset{\sim}{G}_{t}^{-1}\tilde{\underset{\sim}{T}}_{23}\underset{\sim}{G}_{\ell}\right] \times \left[\underset{\sim}{T}_{21} \quad \underset{\sim}{T}_{22}\underset{\sim}{C}_{t}^{-1}\right]\begin{bmatrix}\underset{\sim}{v}\\ \underset{\sim}{C}_{t}\underset{\sim}{v}_{ct}\end{bmatrix} \qquad \text{(II-15f)}$$

Now let us finally substitute Eqs. (II-15a,b) into (II-14a) to get

$$\tilde{\underset{\sim}{T}}_{22}\underset{\sim}{G}_{\ell}\left[-\underset{\sim}{1}_{r\ell} + \underset{\sim}{T}_{23}\left(\underset{\sim}{1}_{rt} + \underset{\sim}{G}_{t}^{-1}\tilde{\underset{\sim}{T}}_{23}\underset{\sim}{G}_{\ell}\underset{\sim}{T}_{23}\right)^{-1}\underset{\sim}{G}_{t}^{-1}\underset{\sim}{T}_{23}\underset{\sim}{G}_{\ell}\right]\left[\underset{\sim}{T}_{21} \quad \underset{\sim}{T}_{22}\underset{\sim}{C}_{t}^{-1}\right]\begin{bmatrix}\underset{\sim}{v}\\ \underset{\sim}{C}_{t}\underset{\sim}{v}_{ct}\end{bmatrix}$$

$$= \left[\tilde{\underset{\sim}{T}}_{12}\frac{d\underset{\sim}{C}_{\ell}}{dt}\underset{\sim}{T}_{11} \quad \tilde{\underset{\sim}{T}}_{12}\frac{d\underset{\sim}{C}_{\ell}\underset{\sim}{T}_{12}\underset{\sim}{C}_{t}^{-1}}{dt} \quad \tilde{\underset{\sim}{T}}_{12}\underset{\sim}{C}_{\ell}\underset{\sim}{T}_{11} \quad \underset{\sim}{1}_{ct} + \tilde{\underset{\sim}{T}}_{12}\underset{\sim}{C}_{\ell}\underset{\sim}{T}_{12}\underset{\sim}{C}_{t}^{-1}\right]\begin{bmatrix}\underset{\sim}{v}\\ \underset{\sim}{C}_{t}\underset{\sim}{v}_{ct}\\ d\underset{\sim}{v}/dt\\ d\underset{\sim}{C}_{t}\underset{\sim}{v}_{ct}/dt\end{bmatrix}$$

(II-15g)

Equation (II-15g) is the same as

$$\dot{\underset{\sim}{s}} = \underset{\sim}{A}\,\underset{\sim}{s} + \underset{\sim}{B}\,\underset{\sim}{u} + \underset{\sim}{F}\,\dot{\underset{\sim}{u}} \tag{II-16a}$$

where we have

$$\underset{\sim}{s} = \underset{\sim}{C}_t \underset{\sim}{v}_{ct}, \qquad \underset{\sim}{u} = \underset{\sim}{v} \tag{II-16b}$$

$$\underset{\sim}{A} = \left[\underset{\sim}{1}_{ct} + \tilde{\underset{\sim}{T}}_{12}\underset{\sim}{C}_\ell \underset{\sim}{T}_{12}\underset{\sim}{C}_t^{-1}\right]^{-1}\left\{-\tilde{\underset{\sim}{T}}_{12}\,\frac{d\underset{\sim}{C}_\ell \underset{\sim}{T}_{12}\underset{\sim}{C}_t^{-1}}{dt}\right.$$

$$\left. + \tilde{\underset{\sim}{T}}_{22}\underset{\sim}{G}_\ell\left[-\underset{\sim}{1}_{r\ell} + \underset{\sim}{T}_{23}\left(\underset{\sim}{1}_{rt} + \underset{\sim}{G}_t^{-1}\tilde{\underset{\sim}{T}}_{23}\underset{\sim}{G}_\ell \underset{\sim}{T}_{23}\right)^{-1}\underset{\sim}{G}_t^{-1}\underset{\sim}{T}_{23}\underset{\sim}{G}_\ell\right]\underset{\sim}{T}_{22}\underset{\sim}{C}_t^{-1}\right\}$$

$$\underset{\sim}{B} = \left[\underset{\sim}{1}_{ct} + \tilde{\underset{\sim}{T}}_{12}\underset{\sim}{C}_\ell \underset{\sim}{T}_{12}\underset{\sim}{C}_t^{-1}\right]^{-1}\left\{-\tilde{\underset{\sim}{T}}_{12}\,\frac{d\underset{\sim}{C}_\ell}{dt}\,\underset{\sim}{T}_{11}\right.$$

$$\left. + \tilde{\underset{\sim}{T}}_{22}\underset{\sim}{G}_\ell\left[-\underset{\sim}{1}_{r\ell} + \underset{\sim}{T}_{23}\left(\underset{\sim}{1}_{rt} + \underset{\sim}{G}_t^{-1}\tilde{\underset{\sim}{T}}_{23}\underset{\sim}{G}_\ell \underset{\sim}{T}_{23}\right)^{-1}\underset{\sim}{G}_t^{-1}\underset{\sim}{T}_{23}\underset{\sim}{G}_\ell\right]\underset{\sim}{T}_{21}\right\}$$

$$\underset{\sim}{F} = -\left[\underset{\sim}{1}_{ct} + \tilde{\underset{\sim}{T}}_{12}\underset{\sim}{C}_\ell \underset{\sim}{T}_{12}\underset{\sim}{C}_t^{-1}\right]^{-1}\underset{\sim}{T}_{12}\underset{\sim}{C}_\ell \underset{\sim}{T}_{11} \tag{II-16c}$$

For the output equations we can use the source portion of Eq. (II-13b) to get

$$-\underset{\sim}{i} = \tilde{\underset{\sim}{T}}_{11}\underset{\sim}{i}_{c\ell} + \tilde{\underset{\sim}{T}}_{21}\underset{\sim}{i}_{r\ell} \tag{II-17}$$

But, from Eq. (II-14a), $\underset{\sim}{i}_{c\ell} = d\underset{\sim}{C}_\ell \underset{\sim}{v}_{c\ell}/dt$ and $\underset{\sim}{i}_{r\ell} = \underset{\sim}{G}_\ell \underset{\sim}{v}_{r\ell}$; the $\underset{\sim}{i}_{c\ell}$ part can be evaluated from Eq. (II-15a), and the $\underset{\sim}{i}_{r\ell}$ part from Eq. (II-15f). Thus we find

$$\underset{\sim}{y} = \underset{\sim}{C}\,\underset{\sim}{s} + \underset{\sim}{D}\,\underset{\sim}{u} + \underset{\sim}{E}\,\dot{\underset{\sim}{u}} \tag{II-18a}$$

with

$$\underset{\sim}{y} = \underset{\sim}{i} \tag{II-18b}$$

$$\underset{\sim}{C} = \tilde{\underset{\sim}{T}}_{11}\,\frac{d\underset{\sim}{C}_\ell \underset{\sim}{T}_{12}\underset{\sim}{C}_t^{-1}}{dt} + \tilde{\underset{\sim}{T}}_{11}\underset{\sim}{C}_\ell \underset{\sim}{T}_{12}\underset{\sim}{C}_t^{-1}\underset{\sim}{A} - \tilde{\underset{\sim}{T}}_{21}\underset{\sim}{G}_\ell$$

$$\times\left[-\underset{\sim}{1}_{r\ell} + \underset{\sim}{T}_{23}\left(\underset{\sim}{1}_{rt} + \underset{\sim}{G}_t^{-1}\tilde{\underset{\sim}{T}}_{23}\underset{\sim}{G}_\ell \underset{\sim}{T}_{23}\right)^{-1}\underset{\sim}{G}_t^{-1}\tilde{\underset{\sim}{T}}_{23}\underset{\sim}{G}_\ell\right]\underset{\sim}{T}_{22}\underset{\sim}{C}_t^{-1}$$

$$\underset{\sim}{D} = \tilde{\underset{\sim}{T}}_{11} \frac{d\underset{\sim}{C}_\ell}{dt} \underset{\sim}{T}_{11} + \tilde{\underset{\sim}{T}}_{11}\underset{\sim}{C}_\ell\underset{\sim}{T}_{12}\underset{\sim}{C}_t^{-1}\underset{\sim}{B} - \tilde{\underset{\sim}{T}}_{21}\underset{\sim}{G}_\ell$$

$$\times \left[-\underset{\sim}{1}_{r\ell} + \underset{\sim}{T}_{23}\left(\underset{\sim}{1}_{rt} + \underset{\sim}{G}_t^{-1}\tilde{\underset{\sim}{T}}_{23}\underset{\sim}{G}_\ell\underset{\sim}{T}_{23}\right)^{-1}\underset{\sim}{G}_t^{-1}\tilde{\underset{\sim}{T}}_{23}\underset{\sim}{G}_\ell\right]\underset{\sim}{T}_{21}$$

$$\underset{\sim}{E} = \tilde{\underset{\sim}{T}}_{11}\underset{\sim}{C}_\ell\underset{\sim}{T}_{11} + \tilde{\underset{\sim}{T}}_{11}\underset{\sim}{C}_\ell\underset{\sim}{T}_{12}\underset{\sim}{C}_t^{-1}\underset{\sim}{F} \qquad \text{(II-18c)}$$

Thus we observe that the equations obtained are not the canonical set but the pair [4]

$$\dot{\underset{\sim}{s}} = \underset{\sim}{A}\,\underset{\sim}{s} + \underset{\sim}{B}\,\underset{\sim}{u} + \underset{\sim}{F}\,\dot{\underset{\sim}{u}} \qquad \text{(II-16a)}$$

$$\underset{\sim}{y} = \underset{\sim}{C}\,\underset{\sim}{s} + \underset{\sim}{D}\,\underset{\sim}{u} + \underset{\sim}{E}\,\dot{\underset{\sim}{u}} \qquad \text{(II-18a)}$$

Nevertheless if $\underset{\sim}{C}_\ell = 0$ then $\underset{\sim}{F} = \underset{\sim}{0}$ and $\underset{\sim}{E} = \underset{\sim}{0}$, and thus, when there are no capacitor-source tie sets, we obtain the canonical equations. It should be observed that the results are valid for time-variable elements and that the only real restriction on the result is the requirement that there be no resistive coupling between tree branches and links, that is, zero $\underset{\sim}{G}_{t\ell}$ and $\underset{\sim}{G}_{\ell t}$ in Eq. (II-14b).

Even in the time-invariant case where there are no capacitor-source tie sets, where considerable simplification occurs, the equations still remain rather messy. Thus we observe that, although the formulation is important for illustrating the general nature of network state-space-like equations, the approach is not the most useful to be taken for normal analysis or synthesis.

As an example, let us reconsider the nonreciprocal Brune section of Fig. I-5. This is redrawn in Fig. II-11, where the appropriate tree is shown with the numbering requested by the theory.

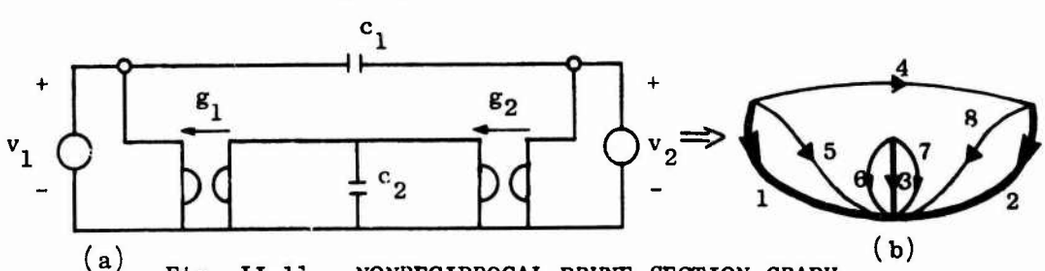

Fig. II-11. NONRECIPROCAL BRUNE SECTION GRAPH.

The tie set and cut set matrices are found as

$$
\begin{array}{c}
4 \rightarrow \\ 5 \rightarrow \\ 6 \rightarrow \\ 7 \rightarrow \\ 8 \rightarrow
\end{array}
\begin{bmatrix} 0 \\ 0 \\ 0 \\ 0 \\ 0 \end{bmatrix}
=
\left[\begin{array}{cc|c:c|cccc}
-1 & 1 & 0 & 1 & 0 & 0 & 0 & 0 \\ \hline
-1 & 0 & 0 & 0 & 1 & 0 & 0 & 0 \\
0 & 0 & -1 & 0 & 0 & 1 & 0 & 0 \\
0 & 0 & -1 & 0 & 0 & 0 & 1 & 0 \\
0 & -1 & 0 & 0 & 0 & 0 & 0 & 1
\end{array}\right]
\left[\begin{array}{c} v_1 \\ v_2 \\ \hdashline v_3 \\ \hdashline v_4 \\ \hdashline v_5 \\ v_6 \\ v_7 \\ v_8 \end{array}\right]
\qquad \text{(II-19a)}
$$

$$
\begin{array}{c}
1 \rightarrow \\ 2 \rightarrow \\ 3 \rightarrow
\end{array}
\begin{bmatrix} 0 \\ 0 \\ 0 \end{bmatrix}
=
\left[\begin{array}{cc|c:c|cccc}
1 & 0 & 0 & 1 & 1 & 0 & 0 & 0 \\
0 & 1 & 0 & -1 & 0 & 0 & 0 & 1 \\ \hline
0 & 0 & 1 & 0 & 0 & 1 & 1 & 0
\end{array}\right]
\left[\begin{array}{c} i_{s1} \\ i_{s2} \\ \hdashline i_3 \\ \hdashline i_4 \\ \hdashline i_5 \\ i_6 \\ i_7 \\ i_8 \end{array}\right]
\qquad \text{(II-19b)}
$$

Next we have the element value constraints

$$\begin{bmatrix} i_3 \\ i_4 \\ i_5 \\ i_6 \\ i_7 \\ i_8 \end{bmatrix} = \begin{bmatrix} dc_2v_3/dt \\ dc_1v_4/dt \\ \begin{bmatrix} 0 & g_1 & 0 & 0 \\ -g_1 & 0 & 0 & 0 \\ 0 & 0 & 0 & g_2 \\ 0 & 0 & -g_2 & 0 \end{bmatrix} \begin{bmatrix} v_5 \\ v_6 \\ v_7 \\ v_8 \end{bmatrix} \end{bmatrix} \qquad \text{(II-19c)}$$

Then

$$\underset{\sim}{A} = -\frac{\underset{\sim}{\tilde{T}}_{22}\underset{\sim}{G}_{\ell}\underset{\sim}{T}_{22}}{c_2} = 0$$

$$\underset{\sim}{B} = -\underset{\sim}{\tilde{T}}_{22}\underset{\sim}{G}_{\ell}\underset{\sim}{T}_{21} = [g_1 \quad -g_2]$$

$$\underset{\sim}{F} = [0 \quad 0]$$

$$\underset{\sim}{C} = \frac{\underset{\sim}{\tilde{T}}_{21}\underset{\sim}{G}_{\ell}\underset{\sim}{T}_{22}}{c_2} = \begin{bmatrix} g_1/c_2 \\ -g_2/c_2 \end{bmatrix}$$

$$\underset{\sim}{D} = \underset{\sim}{\tilde{T}}_{11}\dot{c}_1\underset{\sim}{T}_{11} + \underset{\sim}{\tilde{T}}_{21}\underset{\sim}{G}_{\ell}\underset{\sim}{T}_{21} = \dot{c}_1\begin{bmatrix} 1 & -1 \\ -1 & 1 \end{bmatrix}$$

$$\underset{\sim}{E} = \underset{\sim}{\tilde{T}}_{11}c_1\underset{\sim}{T}_{11} = c_1\begin{bmatrix} 1 & -1 \\ -1 & 1 \end{bmatrix}$$

In this case the resulting equations are canonical and take the form

$$\dot{s} = 0 \cdot s + [-g_1 \quad g_2]\begin{bmatrix} v_1 \\ v_2 \end{bmatrix} \qquad \text{(II-19d)}$$

$$\begin{bmatrix} i_1 \\ i_2 \end{bmatrix} = \begin{bmatrix} g_1/c_2 \\ -g_2/c_2 \end{bmatrix} s + \dot{c}_1 \begin{bmatrix} 1 & -1 \\ -1 & 1 \end{bmatrix} \begin{bmatrix} v_1 \\ v_2 \end{bmatrix} + c_1 \begin{bmatrix} 1 & -1 \\ -1 & 1 \end{bmatrix} \begin{bmatrix} \dot{v}_1 \\ \dot{v}_2 \end{bmatrix} \qquad \text{(II-19e)}$$

The result is checked by calculating the transfer function matrix in the time-invariant case.

D. Transformation to Canonical Form

Because of the presence of $\underset{\sim}{F}$ in the resultant topological equations, it is of interest to find a transformation to eliminate the derivative of the input in the differential equation for the state. For this let us assume that we have on hand a set of equations

$$\dot{\underset{\sim}{x}} = \underset{\sim}{A}\,\underset{\sim}{x} + \hat{\underset{\sim}{B}}\,\underset{\sim}{u} + \underset{\sim}{F}\,\dot{\underset{\sim}{u}} \qquad \text{(II-20a)}$$

$$\underset{\sim}{y} = \underset{\sim}{C}\,\underset{\sim}{x} + \hat{\underset{\sim}{D}}\,\underset{\sim}{u} + \underset{\sim}{E}\,\dot{\underset{\sim}{u}} \qquad \text{(II-20b)}$$

The transformation

$$\underset{\sim}{x} = \underset{\sim}{s} + \underset{\sim}{F}\,\underset{\sim}{u} \qquad \text{(II-20c)}$$

leads to the canonical set

$$\dot{\underset{\sim}{s}} = \underset{\sim}{A}\,\underset{\sim}{s} + (\hat{\underset{\sim}{B}} + \underset{\sim}{F} - \dot{\underset{\sim}{F}})\underset{\sim}{u} \qquad \text{(II-20d)}$$

$$\underset{\sim}{y} = \underset{\sim}{C}\,\underset{\sim}{s} + (\hat{\underset{\sim}{D}} + \underset{\sim}{F})\underset{\sim}{u} + \underset{\sim}{E}\,\dot{\underset{\sim}{u}} \qquad \text{(II-20e)}$$

We observe that such a transformation, for which the input becomes part of the state, leaves the $\underset{\sim}{A}$, $\underset{\sim}{C}$, and $\underset{\sim}{E}$ matrices unchanged.

E. Combination of Methods

If one applies the topological method to a purely resistive structure, the results are considerably simplified. In the cases where there is no coupling between tree branches and links, one merely has that the admittance is given by $\underset{\sim}{D}$ of Eq. (II-18c). We point out that the operations

to obtain $\underset{\sim}{D}$ are in this resistive case relatively easy to set up on a computer. Hence if capacitor extractions are first made and then a topological analysis carried out on the resulting resistive structure, a very convenient method of setting up state-variable equations via the computer results. The method is also quite easily extended to cover those cases where there is resistive coupling between links and tree branches.

By first setting up the graph of the circuit, the topological approach can be used to check the circuit for capacitor-source tie sets to establish the existence of the $\underset{\sim}{E}$ matrix. If there are such tie sets, the topological formulation to calculate $\underset{\sim}{E}$ can actually be carried out--the last of Eq. (II-18c)--since this calculation in itself is not too difficult.

F. Discussion

Because we feel it important to understand somewhat more fully how state-variable equations can arise, as well as more of their meaning, we have presented two convenient methods of setting up the canonical equations. Although both methods cover most situations of interest and have been presented for the time-varying case, neither one is in itself completely general. The capacitor extraction method is lacking in that there can be no capacitor-source tie sets in the circuit, while the topological method needs to be extended to cover the case where nondynamical (that is, resistive) portions have coupling between the tree branches and the links. The capacitor extraction method has the advantage of simplicity while the topological method has the advantage of proceeding directly from the circuit structure. When the two methods are combined by applying the topological techniques to the nondynamic portions resulting from the capacitor extractions, an excellent method appropriate for computer analysis of networks results.

To this point we have not commented upon the existence of various inverses needed in the topological approach. To investigate these would cause an inappropriate diversion so we merely mention that in the case of passive time-invariant circuit elements all inverses are known to exist [3, p. 511].

In many applications, especially for integrated circuits, one meets voltage-controlled voltage sources. By changing somewhat the theory, these can be handled directly, but for our purposes it is worth observing that the topological theory presented applies if one is willing to use the equivalence of Fig. II-12, for which each of the cascade portions posseses a conductance matrix.

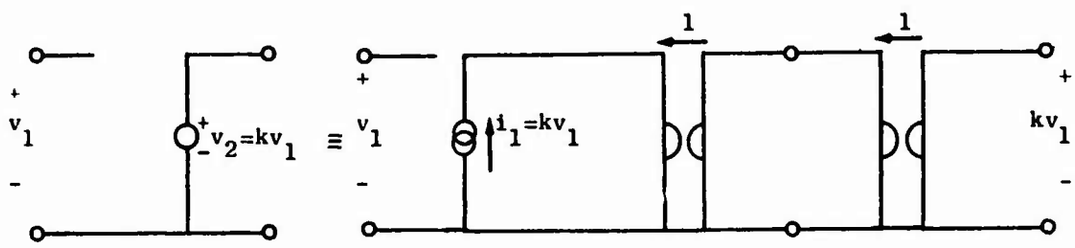

Fig. II-12. CONTROLLED SOURCE EQUIVALENT.

Since the topological method is in itself a bit complicated in end results, it is of interest to note that the results are almost identical to those obtained by Bryant [4] by very similar means.

Our next step will be to reverse the procedure and set up a physical realization from a state-variable realization.

G. References

1. Miller, J. A., and R. W. Newcomb, "A Computer-Oriented Technique for Determining State-Variable Equations for Admittance Descriptions," to appear.

2. Huelsman, L. P., "Circuits, Matrices, and Linear Vector Spaces," McGraw-Hill, New York, 1963.

3. Brown, D. P., "Derivative-Explicit Differential Equations for RLC Graphs," J. Franklin Institute, vol. 275, no. 6, June, 1963, pp. 503-514.

4. Bryant, P. R., "The Explicit Form of Bashkows A Matrix," IRE Trans. on Circuit Theory, vol. CT-9, no. 3, September, 1962, pp. 303-306.

5. Bailey, E., Private discussions. Stanford, summer 1967.

H. Exercises

1. Set up canonical state-variables equations for the filter circuit of Fig. EII-1.

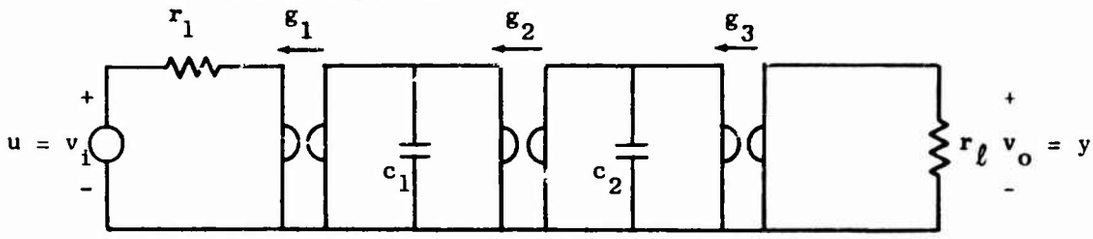

Fig. EII-1. DEGREE TWO FILTER.

2. Set up the canonical state-variable equations for the classical degree two feedback section of Fig. EII-2.

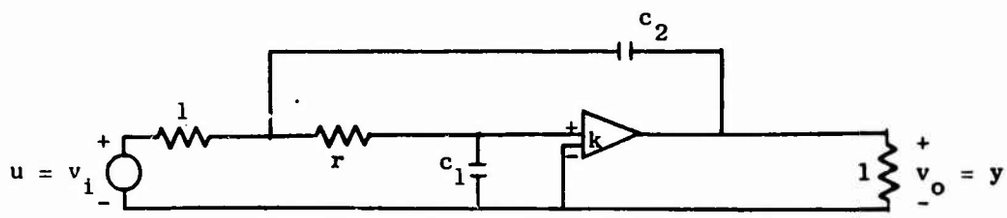

Fig. EII-2. DEGREE TWO FEEDBACK SECTION.

*3. Develop a method for the analysis by topological means of the general resistive structure coming from the capacitor extraction method such has been proposed by E. Bailey [5].

4. Set up the canonical state-variable equations for the integrated circuit integrator of Fig. III-4b and investigate various transformations on the resultant equations.

*5. Investigate the existence of the inverses needed to form $\underset{\sim}{A}$, $\underset{\sim}{B}$, $\underset{\sim}{F}$ of Eq. (II-16c). From such an investigation, exhibit an example of a circuit with no canonical set of state-variable equations. Further, investigate the set of equations needed to be discussed such that all circuits, active or passive but with differential equation descriptions, are covered.

6. Set up the canonical equations by the topological method without using gyrator replacements when only inductors and capacitors (as well as sources) are present.

A la hâte, sagement et minutieusement,
ils se préparent à vivre.
Et puis, vers la vingtième année,
s'eloignent à la hâte, en étouffant leurs
pas, comme s'ils venaient de découvrir
qu'ils s'étaient trompés de demeure et
qu'ils allaient passer leur vie parmi des
hommes qu'ils ne connaissaient pas.

M. Maeterlinck
"Les Avertis" du "Trésor des Humbles"

CHAPTER III

INTEGRATED AND ANALOG CIRCUIT CONFIGURATIONS

A. Summary

The canonical equations are convenient for system simulation, especially through the use of integrated circuits. Here we discuss the concepts of interest in terms of appropriate integrated circuit configurations. In the development special operational amplifier circuits are considered to illustrate some of the points associated with integrated circuit structures.

B. Canonical Equation Simulation - Block Diagram

Let us consider the canonical equations of the form

$$\dot{\underset{\sim}{s}} = \underset{\sim}{A}\,\underset{\sim}{s} + \underset{\sim}{B}\,\underset{\sim}{u} \qquad \text{(I-7a)}$$

$$\underset{\sim}{y} = \underset{\sim}{C}\,\underset{\sim}{s} + \underset{\sim}{D}\,\underset{\sim}{u} \qquad \text{(I-7b)}$$

where the dot has been used to denote time differentiation. If we integrate these canonical equations while denoting the (zero state) integral operator as $1/p$, that is,

$$\frac{1}{p} = \int_{t_o}^{t} [\ ]\, d\tau \qquad \text{(III-1a)}$$

then we arrive at the useful equations for analog simulation

$$\underset{\sim}{s} = \left(\frac{1}{p}\,\underset{\sim}{1}_k\right)\left[\underset{\sim}{A}\,\underset{\sim}{s} + \underset{\sim}{B}\,\underset{\sim}{u}\right] \qquad \text{(III-1b)}$$

$$\underset{\sim}{y} = \underset{\sim}{C}\,\underset{\sim}{s} + \underset{\sim}{D}\,\underset{\sim}{u} \qquad \text{(III-1c)}$$

where, as before, $\underset{\sim}{1}_k$ is the $k \times k$ identity, the state $\underset{\sim}{s}$ being a k vector. For any input $\underset{\sim}{u}$ the system can be simulated from a given realization $R = \{\underset{\sim}{A},\underset{\sim}{B},\underset{\sim}{C},\underset{\sim}{D}\}$, such that the output $\underset{\sim}{y}$ is determined by the block diagram of Fig. III-1. Note that since the various subsystems are multidimensional, the separate blocks have, in general, multiple inputs and outputs.

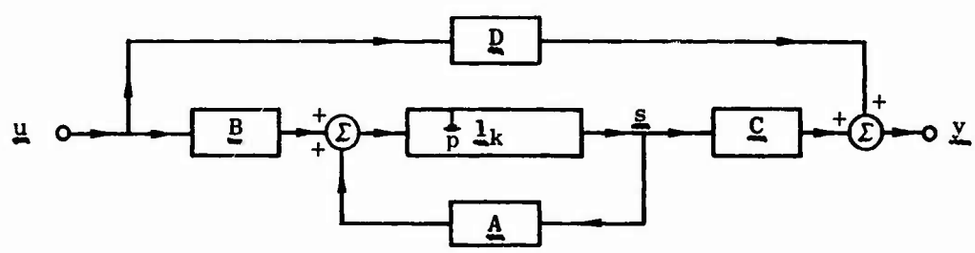

Fig. III-1. BLOCK DIAGRAM FOR CANONICAL EQUATIONS.

Several things can be noted concerning Fig. III-1:

1. Positive feedback is used and hence for (asymptotic) stability we require $\underset{\sim}{A}$ to have all of its eigenvalues negative.
2. Except for the integrators, all blocks consist simply of gain elements. Such multidimensional gain blocks can be constructed by interconnecting one-dimensional gain blocks, as shown for example in Fig. III-2 for the 2-input, 3-output case. We shall later see a method of summing, with gain, many inputs using a single amplifier, but at this point remark that the gain blocks as well as summers need consist only of operational amplifiers and resistors.
3. All integrators are uncoupled and of unity gain. In practice, and especially with integrated circuits, nonunity gain integrators must be used, necessitating a scale change. Since it is most convenient to construct all components identical with integrated circuits, it is practically more useful to simulate the system through the equations

$$\underset{\sim}{s} = \left(\frac{\lambda}{p}\,\underset{\sim}{1}_k\right)\left[\frac{\underset{\sim}{A}}{\lambda}\,\underset{\sim}{s} + \frac{\underset{\sim}{B}}{\lambda}\,\underset{\sim}{u}\right] \qquad \text{(III-2a)}$$

$$\underset{\sim}{y} = \underset{\sim}{C}\,\underset{\sim}{s} + \underset{\sim}{D}\,\underset{\sim}{u} \qquad \text{(III-2b)}$$

where λ is an appropriate gain constant. A simulation of these latter equations is just as for the previous ones except that the integrator and $\underset{\sim}{A}$, $\underset{\sim}{B}$ blocks are scaled in gain.

4. For most practical simulations it is customary to use voltages as variables, in which case all gains are for voltage transfer elements.

5. Time-variable realizations R are allowed, in which case it is of interest to observe that our use of p is as a differential operator and not as the Laplace transform variable.

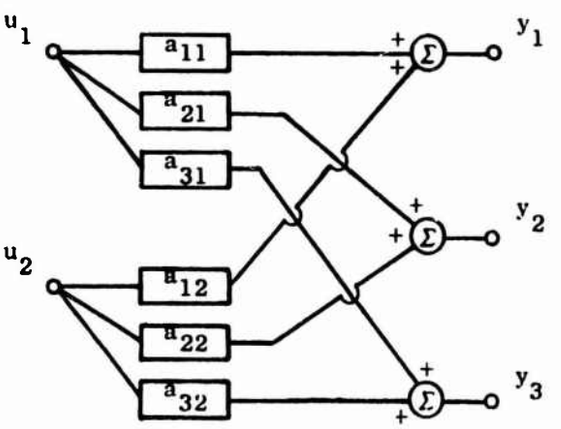

$$\Leftrightarrow \quad \underset{\sim}{y} = \begin{bmatrix} a_{11} & a_{12} \\ a_{21} & a_{22} \\ a_{31} & a_{32} \end{bmatrix} \underset{\sim}{u}$$

Fig. III-2. THE 2-INPUT, 3-OUTPUT GAIN BLOCK.

C. Integrators and Summers

In order to simulate the canonical equations we see that it is of interest to have gain blocks, integrators, and summers. A glance at Fig. III-2, as well as the manner in which summation occurs in Fig. III-1, shows that the gain portions can be incorporated in the summers. Consequently, we concentrate upon one-dimensional integrators and multiple-input, single-output summers with emphasis upon structures suitable for integrated circuits.

The basic building block is the operational amplifier. For integrated circuits one likes to use symmetrical structures with equal resistors, with quantities of interest determined by ratios of resistors in

place of absolute values, where possible. Likewise one generally avoids pnp transistors where possible because of processing problems associated with making both npn and pnp transistors simultaneously. One is therefore led to consider the basic operational amplifier structure of Fig. III-3, on which many refinements are made to obtain various types of improvements, as higher gain by cascading of input amplifiers. For reasonable values of R, larger than the T_2 emitter-base resistance (say $R \approx 3$ kΩ), the gain of the device is roughly [1, p.]

$$K \approx \frac{q}{4kT} V_b \quad [\approx 10\, V_b \text{ at room temperature}] \qquad \text{(III-3)}$$

where q = electron charge, k = Boltzmann's constant, T = absolute temperature. We observe that a differential amplifier is obtained, this being convenient for summers which both add and subtract. On the circuit diagram some of the dc voltages have been indicated for convenience with the input voltages v_+ and v_- assumed held at zero volts dc by external circuitry under the application of no signal. The zener diode is inserted in order to allow proper bias of T_2.

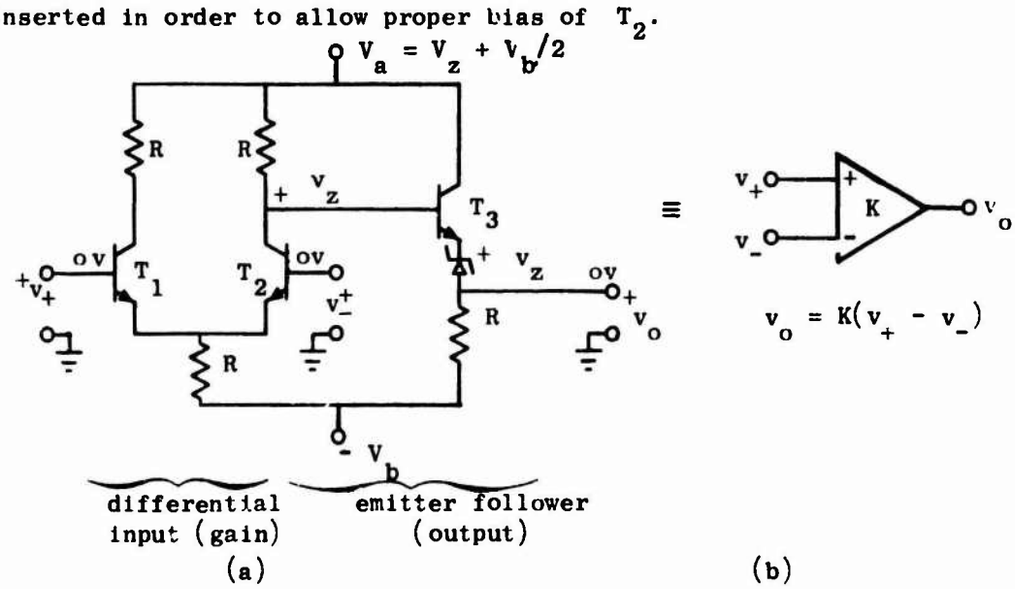

Fig. III-3. BASIC DIFFERENTIAL OPERATIONAL AMPLIFIER.

One can, of course, use the standard capacitor feedback structure for integration, as shown in Fig. III-4a, but if a completely integrated device is desired, which includes integrated capacitors, then it is most

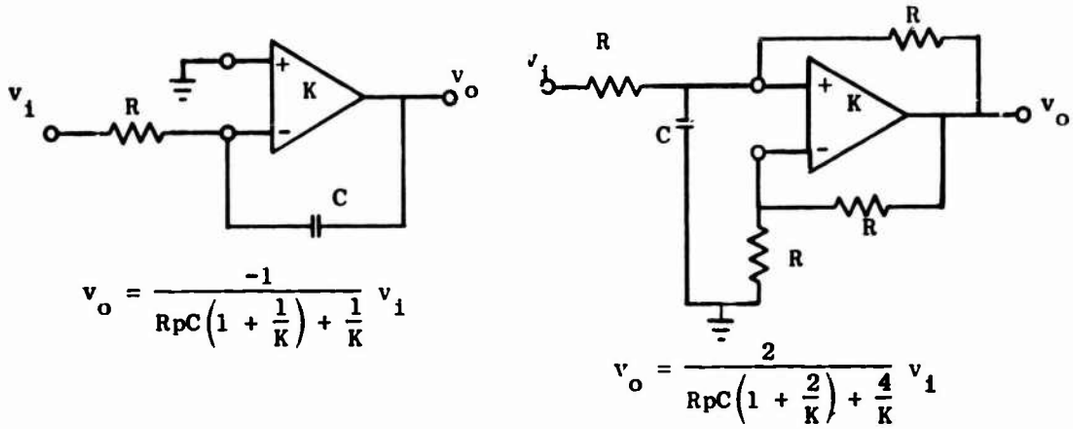

$$v_o = \frac{-1}{RpC\left(1 + \frac{1}{K}\right) + \frac{1}{K}} v_i$$

$$v_o = \frac{2}{RpC\left(1 + \frac{2}{K}\right) + \frac{4}{K}} v_i$$

(a) (b)

Fig. III-4. POSSIBLE INTEGRATORS.

convenient to use the integrator of Fig. III-4b, which in fact gives a slightly larger gain constant also. Note that as with most such operational amplifier circuits we desire infinite gain, $K = \infty$, in the basic amplifier itself, in which case the grounded amplifier configuration gives

$$v_o = \frac{2}{RpC} v_i \qquad \text{(III-4)}$$

Concerning summation, the diagram of Fig. III-5 yields a convenient circuit for integration which has, for $K = \infty$, the input-output relationship [1, p.]

$$v_o = \sum_{j=1}^{m_+} \frac{RG^- + 1}{G^+} G_j^+ v_j^+ - \sum_{j=1}^{m_-} RG_j^- v_j^- \qquad \text{(III-5a)}$$

Through this relationship any values of the coefficients can be obtained through a solution of simultaneous equations since, for the resistance R_j^+ and R_j^- we have the necessary conductances defined as

$$G^+ = \sum_{j=0}^{m_+} G_j^+ , \quad G^- = \sum_{j=0}^{m_-} G_j^- , \quad G_j^+ = \frac{1}{R_j^+} , \quad G_j^- = \frac{1}{R_j^-} \qquad \text{(III-5b)}$$

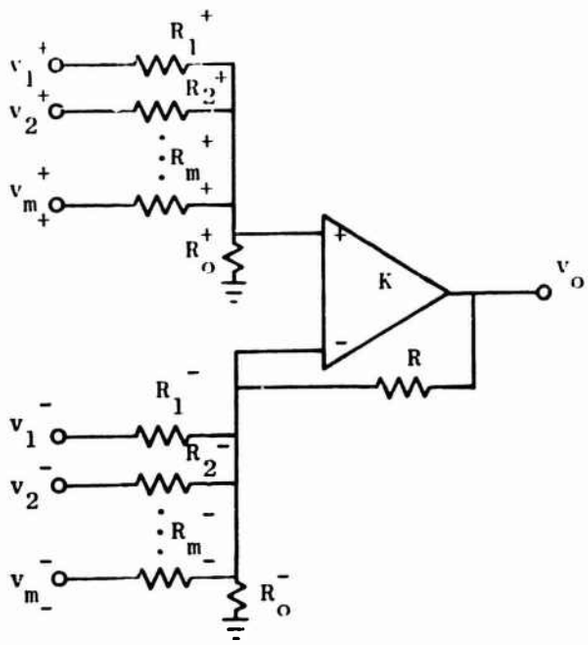

Fig. III-5. SUMMER.

However, it should be observed that inconvenient values for construction through the use of integrated circuits can occur and thus a cascade of components may sometimes be necessary.

D. Scalar Degree Two Realizations

The most practically met situations are those of scalar transfer functions. In such cases the transfer function can be written as the product of degree one and two factors, having real coefficients if we assume that the original transfer function is rational with real coefficients. For sensitivity reasons it is most useful to construct the transfer function through its factors instead of in one complete form. Thus we exhibit a structure for the transfer function

$$T(p) = d + \frac{c_2 p + c_1}{p^2 + 2\zeta\omega_n p + \omega_n^2} \qquad \text{(III-6a)}$$

where we assume for stability reasons that the undamped natural frequency ω_n and the damping ratio ζ are nonnegative. We remark that the quality factor Q can be defined by

$$Q = \frac{1}{2\zeta} \qquad \text{(III-6b)}$$

and that degree one transfer functions are simply realized (and hence left as an exercise).

We claim that a realization of the general degree two transfer function is given by [application of Eq. (I-10c) gives Eq. (III-6a)]

$$\underset{\sim}{A} = \begin{bmatrix} 0 & 1 \\ -\omega_n^2 & -2\zeta\omega_n \end{bmatrix}, \quad \underset{\sim}{B} = \begin{bmatrix} 0 \\ 1 \end{bmatrix}, \quad \underset{\sim}{C} = [c_1 \quad c_2], \quad \underset{\sim}{D} = d \tag{III-6c}$$

Assuming nonnegative c_1, c_2, d, a circuit diagram suitable for integration would be as shown in Fig. III-6 where the values of resistance can be adjusted for available capacitance ranges. The presence of feedback loops can readily be seen, as well as an appreciation gained for the complications attendant on going to the complete simulation of higher degree transfer functions (without the initial factorization). We observe that the minimum number of capacitors, two, is used for Fig. III-6.

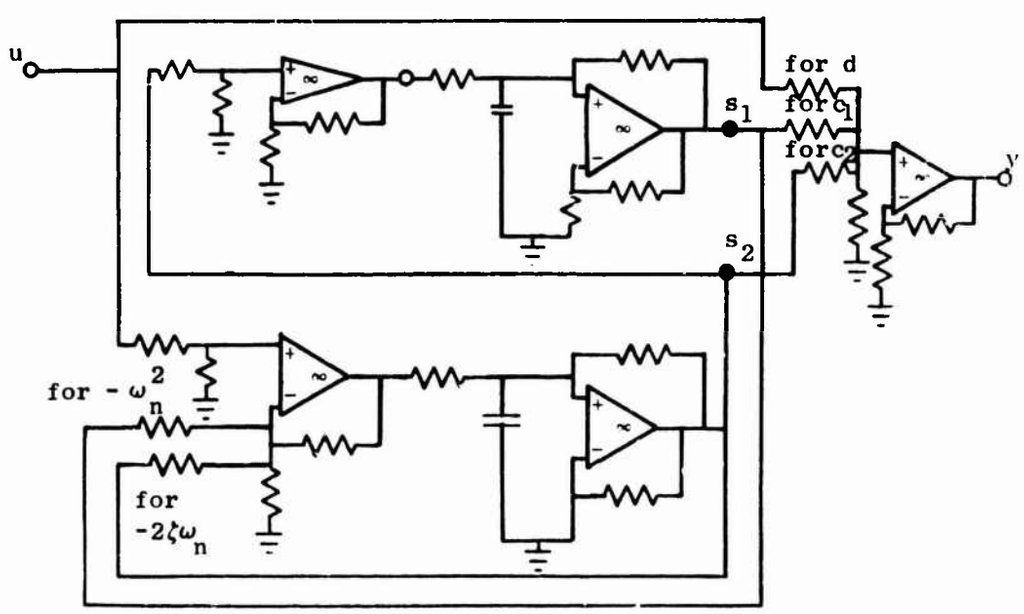

Fig. III-6. POSSIBLE DEGREE TWO SCALAR SIMULATION.

E. Canonical Equation Simulation - Admittances

In Section II-b we saw that the state-variable equations could be set up for admittance "transfer" function (matrices) by extracting capacitors. Here we can reverse the procedure. Thus consider the resistive (n+c)-port, assumed time-invariant, described by

$$\mathbf{y}_c = \begin{bmatrix} \mathbf{y}_{11} & \mathbf{y}_{12} \\ \mathbf{y}_{21} & \mathbf{y}_{22} \end{bmatrix} \qquad \text{(III-7a)}$$

and loaded in its final c-ports by c unit capacitors, as shown in Fig. III-7. We calculate for the input admittance

$$\mathbf{y}_{in} = \mathbf{y}_{11} - \mathbf{y}_{12}(p\mathbf{1}_c + \mathbf{y}_{22})^{-1}\mathbf{y}_{21} \qquad \text{(III-7b)}$$

If we compare the result with that of the transfer function

$$\mathbf{T}(p) = \mathbf{D} + \mathbf{C}(p\mathbf{1}_k - \mathbf{A})^{-1}\mathbf{B} \qquad \text{(I-10c)}$$

we see that the identification

$$\mathbf{y}_c = \begin{bmatrix} \mathbf{D} & -\mathbf{C} \\ \mathbf{B} & -\mathbf{A} \end{bmatrix} \qquad \text{(III-7c)}$$

is possible, with the dimension of the state chosen as the number of capacitors, k = c. Consequently, given a minimal (or even nonminimal)

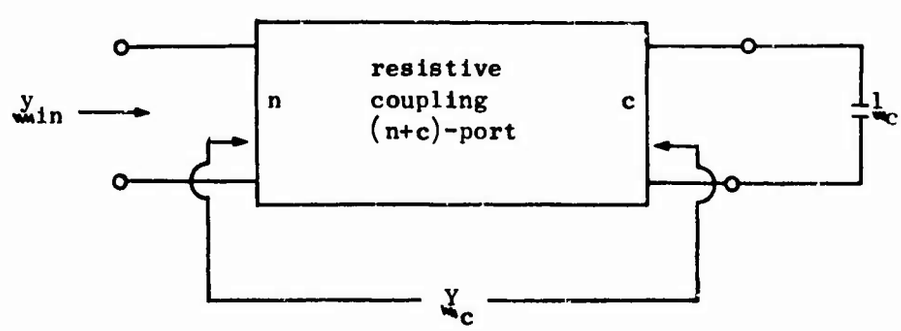

Fig. III-7. CAPACITOR LOADED STRUCTURE.

realization $R = (\underset{\sim}{A}, \underset{\sim}{B}, \underset{\sim}{C}, \underset{\sim}{D})$, we can construct a circuit, when the transfer function is an admittance matrix, by synthesizing $\underset{\sim}{Y}_c$ of Eq. (III-7c) and loading in $k = c$ unit capacitors. But $\underset{\sim}{Y}_c$ being a constant matrix is realized through the use of (positive and negative) resistors and gyrators. Later we will show how $\underset{\sim}{Y}_c$ can be transformed to become positive-real, if the original transfer function admittance, $\underset{\sim}{y}_{in}$, is positive-real but such requires the development of more theory. We can remark, however, that if the state-variable equations have a term $\underset{\sim}{E}\,\dot{\underset{\sim}{u}}$ added to the output equations, this term can be synthesized by a transformer network (constructed from gyrators if desired) loaded in unit capacitors with the result connected in parallel with that of Fig. III-7.

To synthesize $\underset{\sim}{Y}_c$ itself, we can proceed by decomposing it into its symmetric and skew-symmetric parts,

$$\underset{\sim}{Y}_c = \underset{\sim}{Y}_{c\ sy} + \underset{\sim}{Y}_{c\ sk} \qquad \text{(III-8a)}$$

where

$$2\underset{\sim}{Y}_{c\ sy} = \underset{\sim}{Y}_c + \tilde{\underset{\sim}{Y}}_c\,, \qquad 2\underset{\sim}{Y}_{c\ sk} = \underset{\sim}{Y}_c - \tilde{\underset{\sim}{Y}}_c \qquad \text{(III-8b)}$$

and again, the super tilde $\sim$ denotes transposition. The skew-symmetric part is immediately constructed from gyrators, one for each nonzero entry for example. The symmetric part can be further decomposed as

$$\underset{\sim}{Y}_{c\ sy} = \underset{\sim}{G}[\underset{\sim}{1}_{r_+} \dotplus (-\underset{\sim}{1}_{r_-})]\tilde{\underset{\sim}{G}} \qquad \text{(III-8c)}$$

where $\dotplus$ denotes the direct sum of two matrices. The right side of Eq. (III-8c) can be synthesized by loading a gyrator coupling network of admittance matrix

$$\underset{\sim}{Y}_g = \begin{bmatrix} \underset{\sim}{0} & \underset{\sim}{G} \\ -\tilde{\underset{\sim}{G}} & \underset{\sim}{0} \end{bmatrix} \qquad \text{(III-8d)}$$

in r_+ unit positive resistors and r_- unit negative resistors, as shown in Fig. III-8 [recall that a formula similar to Eq. (III-7b) applies]. The coupling structure itself results as a parallel connection of the circuits for the symmetric and skew-symmetric parts of $\underset{\sim}{Y}_c$.

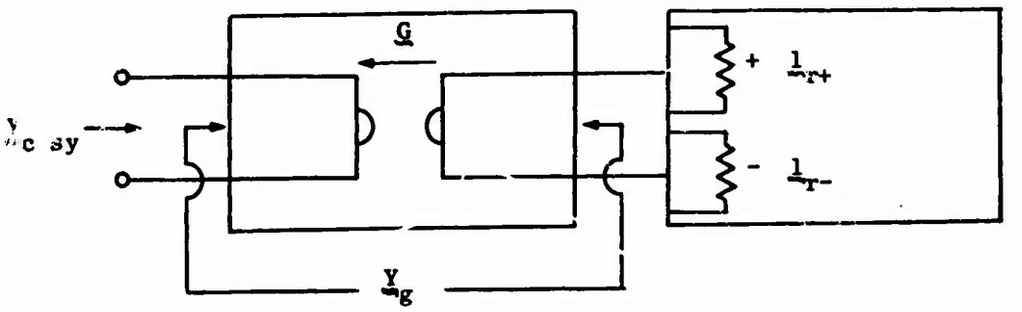

Fig. III-8. CONFIGURATION FOR SYMMETRIC PART OF Y_c.

As an example of the method, let us consider the degree two lowpass admittance

$$y_{in}(p) = \frac{1}{p^2 + 2\zeta p + 1} \qquad \text{(III-9a)}$$

We observe that this admittance is not positive real (as $1/y_{in}$ has a double pole at infinity) in which case active devices must be incorporated. Combining the realization of Eqs (III-6c) with $\underset{\sim}{Y}_c$ of Eq. (III-7c) yields

$$\underset{\sim}{Y}_c = \begin{bmatrix} 0 & -1 & 0 \\ 0 & 0 & -1 \\ 1 & 1 & 2\zeta \end{bmatrix} \qquad \text{(III-9b)}$$

which has the symmetric and skew-symmetric parts

$$\underset{\sim}{Y}_{c\ sy} = \begin{bmatrix} 0 & -1/2 & 1/2 \\ -1/2 & 0 & 0 \\ 1/2 & 0 & 2\zeta \end{bmatrix}, \qquad \underset{\sim}{Y}_{c\ sk} = \begin{bmatrix} 0 & -1/2 & -1/2 \\ 1/2 & 0 & -1 \\ 1/2 & 1 & 0 \end{bmatrix} \qquad \text{(III-9c)}$$

To diagonalize the symmetric part we can add $-1/4\zeta$ times the last row to the first and then add -4ζ times the first row to the second. In terms of elementary matrices this gives

$$\begin{bmatrix} 1 & 0 & 0 \\ -4\zeta & 1 & 0 \\ 0 & 0 & 1 \end{bmatrix} \begin{bmatrix} 1 & 0 & -1/4\zeta \\ 0 & 1 & 0 \\ 0 & 0 & 1 \end{bmatrix} \begin{bmatrix} 0 & -1/2 & 1/2 \\ -1/2 & 0 & 0 \\ 1/2 & 0 & 2\zeta \end{bmatrix} \begin{bmatrix} 1 & 0 & 0 \\ 0 & 1 & 0 \\ -1/4\zeta & 0 & 1 \end{bmatrix} \begin{bmatrix} 1 & -4\zeta & 0 \\ 0 & 1 & 0 \\ 0 & 0 & 1 \end{bmatrix} = \begin{bmatrix} -1/8\zeta & 0 & 0 \\ 0 & 2\zeta & 0 \\ 0 & 0 & 2\zeta \end{bmatrix}$$

On multiplying out the inverses of the transformation matrices (which are easily found by changing sign on the off-diagonal terms), we arrive at

$$\underset{\sim}{Y}_{c\ sy} = \begin{bmatrix} 1 & 0 & 1/4\zeta \\ 4\zeta & 1 & 0 \\ 0 & 0 & 1 \end{bmatrix} \begin{bmatrix} -1/8\zeta & 0 & 0 \\ 0 & 2\zeta & 0 \\ 0 & 0 & 2\zeta \end{bmatrix} \begin{bmatrix} 1 & 4\zeta & 0 \\ 0 & 1 & 0 \\ 1/4\zeta & 0 & 1 \end{bmatrix} \tag{III-9d}$$

We observe that the diagonal matrix is not quite in the form used in Eq. (III-8c), but this is not crucial since we merely use nonunit resistors with the negative one placed first (the other form can easily be obtained by using some additional steps). We then wish to load a gyrator 6-port described by

$$\underset{\sim}{Y}_{mg} = \begin{bmatrix} 0 & 0 & 0 & 1 & 0 & 1/4\zeta \\ 0 & 0 & 0 & 4\zeta & 1 & 0 \\ 0 & 0 & 0 & 0 & 0 & 1 \\ -1 & -4\zeta & 0 & 0 & 0 & 0 \\ 0 & -1 & 0 & 0 & 0 & 0 \\ -1/4\zeta & 0 & 1 & 0 & 0 & 0 \end{bmatrix} \tag{III-9e}$$

in one negative and two positive resistors to obtain $\underset{\approx}{Y}_{c\ sy}$. The result is shown in Fig. III-9a.

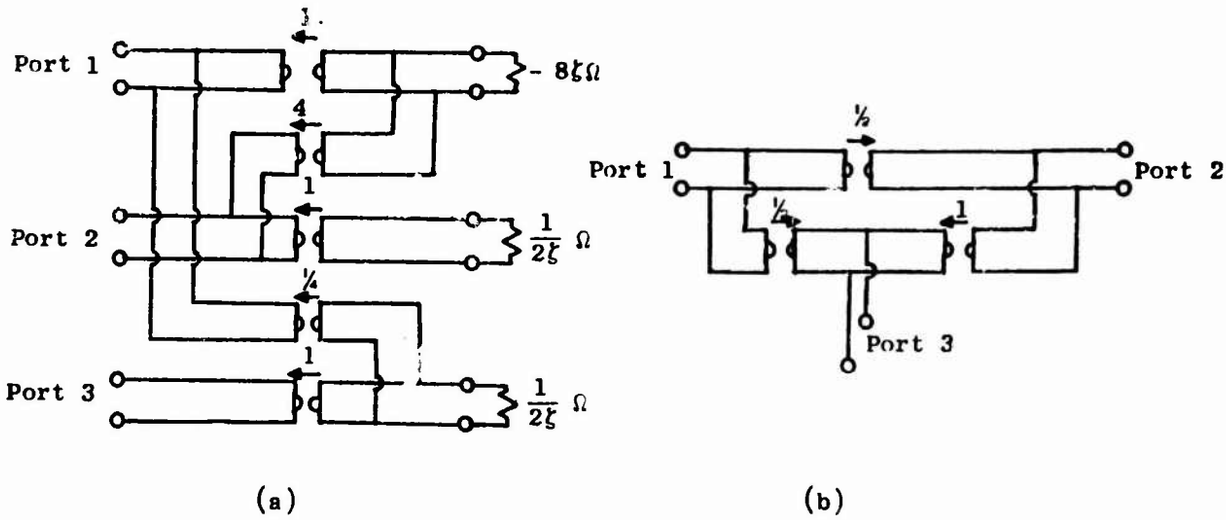

Fig. III-9. CIRCUITS FOR $\underset{\approx}{Y}_{c\ sy}$ (a) AND $\underset{\approx}{Y}_{c\ sk}$ (b).

The circuit for $\underset{\approx}{Y}_{c\ sk}$ is similarly obtained and is shown in the (b) portion of Fig. III-9. The two portions of this figure are connected in parallel with the final two ports loaded in unit capacitors to obtain the desired input admittance at port 1.

F. Discussion

Using the canonical state-variable equations, analog configurations can easily be set up using a block diagram representation of the equations; the resulting components are realized through summers and integrators, the latter being obtained through the use of operational amplifier circuits. Since integrated operational amplifiers have proven extremely practical and since the only other elements needed are resistors and capacitors, both of which can be integrated, the method is quite useful for integrated circuit designs.

It is of interest to observe that exactly as many capacitors are used as there are state variables, and in fact no fewer can ever be used. Since, of the components required here, capacitors are the most difficult elements to make in integrated circuits, the method is about as convenient as could ever be hoped for. As a consequence we have introduced some basic configurations particularly suited for integration.

It should be mentioned that in integrated circuits the ratios of resistors are rather accurately obtained, whereas absolute values are extremely hard to fix accurately. If we observe the coefficients for the summer multipliers, Eq. (III-5a), we see that indeed these coefficients depend only upon ratios of resistances. The situation is somewhat different for the integrator where both resistance and capacitance are involved. In fact, since RC products only quite far away from unity are available in integrated circuit form, it is important to introduce an integrating scale constant in the state-variable equations, the λ of Eq. (III-2b).

We observe that although the equations allow time-variable coefficients and, in fact, the circuit representations hold for such coefficients, it is practically quite difficult to perform time variations on the operational amplifier structures.

Although we have not discussed the possibility, it is actually more convenient to perform time variations by use of the capacitance extraction method. But we have discussed how the previous analysis method, through capacitor extraction, can be carried over to synthesis to create a resistive coupling structure by specifying the admittance coupling matrix $\underset{\sim}{Y}_c$ in terms of the realization $R = \{\underset{\sim}{A},\underset{\sim}{B},\underset{\sim}{C},\underset{\sim}{D}\}$. In conjunction with this we have given one method of synthesis of $\underset{\sim}{Y}_c$ in terms of gyrators, which can be integrated [2], and positive and negative resistors. Since the negative resistors cause some concern for practical integration, it is of perhaps more practical interest to point out that $\underset{\sim}{Y}_c$ can be obtained as an interconnection of voltage-controlled current sources and that such sources are relatively easy to integrate [1, p.].

Of the two methods presented, the first probably has the advantage in scalar situations of allowing for smaller sensitivities. To obtain these sensitivities of small size it is important to decompose the transfer function into degree one or two portions and cascade the resulting sections. However it is worth mentioning that a good sensitivity analysis of the second (capacitor extraction) method has as yet not been made.

Here we really only treated the synthesis of voltage transfer functions (by the operational amplifier techniques) or of admittance matrices

(by the capacitor extraction methods). However, by the use of voltage-to-current or current converters, other specifications can equally well be realized.

G. References

1. Newcomb, R. W., "Active Integrated Circuit Synthesis," Prentice-Hall, Englewood Cliffs, N.J., 1968.

2. Chua, H. T., and R. W. Newcomb, "Integrated Direct-Coupled Gyrator," Electronic Letters, vol. 3, no. 5, May 1967, pp. 182-184.

H. Exercises

1. Set up the state-variable configuration using integrated operational amplifiers for the degree one transfer function. Compare with results obtainable with simple RC circuits.
2. Discuss modifications needed in the theories if terms of the form $\underline{E}\,\dot{\underline{u}}$ are present. Explain why these are avoided, where possible, in the operational amplifier techniques.
3. Complete the example of Section E by drawing the final overall circuit. Compare with alternate methods and discuss advantages and disadvantages of the method.
4. Synthesize

$$y_{in}(p) = \frac{2p}{p^2 + 2\zeta p + 1}$$

5. Discuss circuits for obtaining the gyrators and negative resistors needed in Fig. III-9.
6. Investigate methods of obtaining practical realizations for the case of time-variable structures.

Ils sont étranges. Ils semblent plus près de la que les autres et ne rien soupçonner, et cependant leurs yeux ont une certitude si profonde qu'il faut qu'ils sachent tout et qu'ils aient eu plus d'un soir le temps de se dire leur secret.

M. Maeterlinck
"Les Avertis" du "Trésor des Humbles"

IV. MINIMAL REALIZATION CREATION

A. Summary

By conversion of a high order differential equation to a set of first degree ones a minimal realization is relatively easily obtained in the scalar case. For matrix transfer functions the algebraic method of Ho is presented for obtaining minimal realizations.

B. Scalar Minimal Realizations

Previously we have seen how a given circuit can be analyzed to obtain an appropriate set of canonical equations. Likewise we have seen how a circuit can be obtained when a realization is on hand, that is when the canonical equations are on hand. Here we complete the picture for time-invariant structures by giving an algebraic procedure for finding a minimal realization from a given transfer function. We begin with the scalar case for which the result can be easily given.

We therefore first begin by assuming as given the scalar transfer function

$$T(p) = \frac{dp^{\delta} + d_{\delta}p^{\delta-1} + \ldots + d_2p + d_1}{p^{\delta} + a_{\delta}p^{\delta-1} + \ldots + a_2p + a_1} \qquad (IV\text{-}1)$$

of degree δ. If we treat p as the differential operator d/dt this transfer function defines the differential equation

$$\left[p^{\delta} + a_{\delta}p^{\delta-1} + \ldots + a_2 p + a_1\right]y = \left[dp^{\delta} + d_{\delta}\, p^{\delta-1} + \ldots + d_2 p + d_1\right]u \tag{IV-2a}$$

We can now introduce some changes of variables beginning with

$$y = s_1 + du \tag{IV-2b}$$

which results in

$$\left[p^{\delta-1} + a_{\delta}p^{\delta-2} + \ldots + a_2\right]ps_1 + a_1 s_1 = \left[(d_{\delta}-a_{\delta}d)p^{\delta-1} + \ldots + (d_1-a_1 d)\right]u$$

Next letting

$$ps_1 = s_2 + (d_{\delta}-a_{\delta}d) \tag{IV-2c}$$

results in

$$\left[p^{\delta-2} + a_{\delta}p^{\delta-3} + \ldots + a_3\right]ps_2 + a_2 s_2 + a_1 s_1 =$$

$$\left[\left\{(d_{\delta-1}-a_{\delta-1}d) - a_{\delta}(d_{\delta}-a_{\delta}d)\right\}p^{\delta-2} + \ldots + \left\{(d_1-a_1 d) - a_2(d_{\delta}-a_{\delta}d)\right\}\right]u$$

Continuing by letting

$$ps_2 = s_3 + \left\{(d_{\delta-1}-a_{\delta-1}d) - a_{\delta}(d_{\delta}-a_{\delta}d)\right\} \tag{IV-2d}$$

etc., results in the final equation

$$ps_{\delta} + a_{\delta}s_{\delta} + a_{\delta-1}s_{\delta-1} + \ldots + a_2 s_2 + a_1 s_1 = b_{\delta}u \tag{IV-2e}$$

where b_{δ} is a combination of the a_i and d_i coefficients. We have then obtained the canonical equations which can be summarized as

$$
\begin{bmatrix} \dot{s}_1 \\ \dot{s}_2 \\ \dot{s}_3 \\ \vdots \\ \dot{s}_{\delta-1} \\ \dot{s}_\delta \end{bmatrix}
=
\begin{bmatrix}
0 & 1 & 0 & \cdots & 0 & 0 \\
0 & 0 & 1 & \cdots & 0 & 0 \\
0 & 0 & 0 & \ddots & 0 & 0 \\
\vdots & \vdots & \vdots & & \vdots & \vdots \\
0 & 0 & 0 & \cdots & 0 & 1 \\
-a_1 & -a_2 & -a_3 & \cdots & -a_{\delta-1} & -a_\delta
\end{bmatrix}
\begin{bmatrix} s_1 \\ s_2 \\ s_3 \\ \vdots \\ s_{\delta-1} \\ s_\delta \end{bmatrix}
+
\begin{bmatrix} d_\delta - a_\delta d \\ \cdots \\ \\ \\ \cdots \\ b_\delta \end{bmatrix} u
$$

$$
y = \begin{bmatrix} 1 & 0 & 0 & 0 & \cdots & 0 & 0 \end{bmatrix}
\begin{bmatrix} s_1 \\ s_2 \\ s_3 \\ \vdots \\ s_{\delta-1} \\ s_\delta \end{bmatrix} + du \qquad \text{(IV-3)}
$$

We observe that the realization is minimal since $\underset{\sim}{A}$ is $\delta \times \delta$ and $T(p)$ has degree δ. Also, the same procedure holds for the time-varying case with these however being additional derivatives of coefficients in the $\underset{\sim}{B}$ matrix.

From Eq. (IV-3) many other (in fact all) minimal realizations can be obtained by use of nonsingular transformations on the state, that is by introducing

$$
\underset{\sim}{\hat{s}} = \underset{\sim}{T}\,\underset{\sim}{s}
$$

C. Matrix Minimal Realizations

The matrix case is much more difficult to pursue. We follow the algebraic procedure of Ho [1] by first introducing a nonminimal realization which is reduced to be minimal.

We begin by observing the form of the transfer function matrix in terms of the realization matrices. Assuming the realization to be minimal, that is the state of minimal dimension δ, $k = \delta$, we obtain on expanding the inverse of $p\mathbf{1}_\delta - \mathbf{A}$ about $p = \infty$,

$$\mathbf{T}(p) = \mathbf{D} + \mathbf{C}\,(p\mathbf{1}_\delta - \mathbf{A})^{-1}\mathbf{B}$$

$$= \mathbf{D} + \sum_{i=0}^{\infty} \mathbf{C}\,\frac{\mathbf{A}^i}{p^{i+1}}\,\mathbf{B} \qquad \text{(IV-4a)}$$

where $\mathbf{A}^i$ is the ith power of $\mathbf{A}$. By making a direct expansion of $\mathbf{T}(p)$ itself about $p = \infty$ yields the coefficients $\mathbf{A}_i$ for the series

$$\mathbf{T}(p) = \mathbf{A}_{-1} + \sum_{i=0}^{\infty} \frac{\mathbf{A}_i}{p^{i+1}} \qquad \text{(IV-4b)}$$

Since $\mathbf{T}(p)$ is rational we can equate term by term in the last two expressions to obtain that $R = \{\mathbf{A},\mathbf{B},\mathbf{C},\mathbf{D}\}$ is a realization if and only if

$$\mathbf{D} = \mathbf{T}_{-1} = \mathbf{T}(\infty) \qquad \text{(IV-4c)}$$

$$\mathbf{A}_i = \mathbf{C}\,\mathbf{A}^i\mathbf{B}\ , \qquad i = 0, 1, \ldots \qquad \text{(IV-4d)}$$

Our job is to hunt for an $\mathbf{A}$, $\mathbf{B}$, $\mathbf{C}$ which satisfy, Eq. (IV-4d); we comment that this last equation holds no matter if the realization is minimal or not, but that we are actually searching for a minimal one.

Since $\mathbf{T}(p)$ is rational there is a relationship among the $\mathbf{A}_i$ of Eq. (IV-4b). To obtain this relationship we can find the least common denominator polynomial

$$g(p) = p^r + a_r p^{r-1} + \ldots + a_1 \qquad \text{(IV-5a)}$$

of $\underset{\sim}{T}(p)$ which next allows us to write the transfer function as a matrix polynomial divided by $g(p)$. Thus

$$\underset{\sim}{T}(p) = \frac{p^r \underset{\sim}{B}_{r+1} + p^{r-1} \underset{\sim}{B}_r + \ldots + p\underset{\sim}{B}_2 + \underset{\sim}{B}_1}{p^r + a_r p^{r-1} + \ldots + a_1} \qquad \text{(IV-5b)}$$

As a consequence the product $g(p)\underset{\sim}{T}(p)$ is polynomial and on using the expansion of Eq. (IV-4b) we have

$$\left(\sum_{j=1}^{r+1} a_j p^{j-1}\right)\left(\sum_{k=-1}^{\infty} \underset{\sim}{A}_k / p^{k+1}\right) = \sum_{i=1}^{r+1} \underset{\sim}{B}_i p^{i-1}$$

Equating those coefficients, $\sum_{j=1}^{r+1} a_j \underset{\sim}{A}_{\ell+j-2}$, of $p^{-\ell}$ to zero we find

$$\underset{\sim}{A}_k = -\sum_{j=1}^{r} a_j \underset{\sim}{A}_{k-r+j-1} \quad , \qquad k \geq r \qquad \text{(IV-5c)}$$

As we saw in Eq. (IV-3) the $\underset{\sim}{A}$ matrix was the companion matrix determined solely by $g(p)$. As a consequence we introduce its generalization, for which we recall that $\underset{\sim}{T}(p)$ is an $n \times m$ matrix. Thus, the generalized $(rn \times rn)$ <u>companion</u> matrix for $g(p)$ is defined by

$$\underset{\sim}{\Omega}_n = \left[\begin{array}{c|c|c|c|c} \underset{\sim}{0}_n & \underset{\sim}{1}_n & \underset{\sim}{0} & \underset{\sim}{0} & \\ \hline \underset{\sim}{0} & \underset{\sim}{0} & \begin{matrix} \underset{\sim}{1}_n \\ \\ \underset{\sim}{0} \end{matrix} & \begin{matrix} \ddots \\ \underset{\sim}{0} \end{matrix} & \underset{\sim}{0} \\ \hline & & & \underset{\sim}{0} & \underset{\sim}{1}_n \\ \hline -a_1\underset{\sim}{1}_n & -a_2\underset{\sim}{1}_n & -a_3\underset{\sim}{1}_n & \cdots & -a_r\underset{\sim}{1}_n \end{array}\right] \qquad \text{(IV-6a)}$$

where, as before, $\underset{\sim}{1}_n$ is the $n \times n$ identity matrix. To accompany this companion matrix we need the generalized $(rn \times rm)$ <u>Hankel</u> matrix.

$$\underset{\sim}{S}_r = \begin{bmatrix} \underset{\sim}{A}_0 & \underset{\sim}{A}_1 & \cdots & \underset{\sim}{A}_{r-1} \\ \underset{\sim}{A}_1 & \underset{\sim}{A}_2 & \cdots & \underset{\sim}{A}_r \\ \vdots & & & \\ \underset{\sim}{A}_{r-1} & \underset{\sim}{A}_r & \cdots & \underset{\sim}{A}_{2r-2} \end{bmatrix} \tag{IV-6b}$$

From Eq. (IV-5c) we observe that $\underset{\sim}{\Omega}_n$ acts to shift rows, or columns, of $\underset{\sim}{S}_r$ when the two are multiplied, that is

$$\underset{\sim}{\Omega}_n \underset{\sim}{S}_r = \underset{\sim}{S}_r \tilde{\underset{\sim}{\Omega}}_m = \begin{bmatrix} \underset{\sim}{A}_1 & \underset{\sim}{A}_2 & \cdots & \underset{\sim}{A}_r \\ \underset{\sim}{A}_2 & \underset{\sim}{A}_3 & \cdots & \underset{\sim}{A}_{r+1} \\ \vdots & \vdots & \ddots & \vdots \\ \underset{\sim}{A}_r & \underset{\sim}{A}_{r+1} & \cdots & \underset{\sim}{A}_{2r-1} \end{bmatrix} \tag{IV-6c}$$

where the superscript tilde denotes matrix transposition. As a consequence premultiplication of $\underset{\sim}{S}_r$ by $\underset{\sim}{\Omega}_n^i$ brings $\underset{\sim}{A}_i$ to the (1,1) position of the result. In order to isolate this position we define the $\rho \times \gamma$ matrix

$$\underset{\sim}{1}_{\rho,\gamma} = \left[\underset{\sim}{1}_\rho \;\vdots\; \underset{\sim}{0}_{\rho \times \gamma - \rho} \right] \tag{IV-6d}$$

for which the first ρ columns are the identity matrix with the remaining columns zero. Then

$$\underset{\sim}{A}_i = \underset{\sim}{1}_{n,rn} \left(\underset{\sim}{\Omega}_n^i \underset{\sim}{S}_r \right) \tilde{\underset{\sim}{1}}_{m,rm} \tag{IV-6e}$$

A possible realization is

$$\underset{\sim}{A} = \underset{\sim}{\Omega}_n , \quad \underset{\sim}{B} = \underset{\sim}{S}_r \tilde{\underset{\sim}{1}}_{m,rm} , \quad \underset{\sim}{C} = \underset{\sim}{1}_{n,rn} , \quad \underset{\sim}{D} = \underset{\sim}{T}^{(\infty)} \tag{IV-7}$$

for note that Eq. (IV-6e) is just $\underset{\sim}{A}_i = \underset{\sim}{C}\,\underset{\sim}{A}^i\underset{\sim}{B}$ which is as required by Eq. (IV-4d). This realization however is not generally minimal, having $k = rn$ which is generally larger than the minimum size, δ, required; as we will see, Eq. (IV-13), this latter is given by $\delta = \text{rank}\,\underset{\sim}{S}_r$. As a consequence let

$$\delta = \text{rank}\,\underset{\sim}{S}_r \tag{IV-8a}$$

in which case one can readily find nonsingular matrices $\underset{\sim}{M}$ and $\underset{\sim}{N}$ to bring $\underset{\sim}{S}_r$ to diagonal form

$$\underset{\sim}{M}\,\underset{\sim}{S}_r\,\underset{\sim}{N} = \underset{\sim}{\tilde{1}}_{\delta,rn}\,\underset{\sim}{1}_{\delta,rm} \tag{IV-8b}$$

In terms of the matrices defined to this point we can now exhibit a minimal realization. <u>Our result is</u>: a rational $n \times m$ transfer function matrix $\underset{\sim}{T}(p)$, finite at infinity, has a minimal realization given by

$$\underset{\sim}{A} = \underset{\sim}{1}_{\delta,rn}\,\underset{\sim}{M}\,\underset{\sim}{\Omega}_n\,\underset{\sim}{S}_r\,\underset{\sim}{N}\,\underset{\sim}{\tilde{1}}_{\delta,rm}\,, \qquad \underset{\sim}{B} = \underset{\sim}{1}_{\delta,rn}\,\underset{\sim}{M}\,\underset{\sim}{S}_r\,\underset{\sim}{\tilde{1}}_{m,rm}$$

$$\underset{\sim}{C} = \underset{\sim}{1}_{n,rn}\,\underset{\sim}{S}_r\,\underset{\sim}{N}\,\underset{\sim}{\tilde{1}}_{\delta,rm}\,, \qquad \underset{\sim}{D} = \underset{\sim}{T}(\infty) \tag{IV-9}$$

To see that Eqs. (IV-9) do define a minimal realization we can proceed as follows. First we observe that

$$\underset{\sim}{S}_r^{\#} = \underset{\sim}{N}\,\underset{\sim}{\tilde{1}}_{\delta,rm}\,\underset{\sim}{1}_{\delta,rn}\,\underset{\sim}{M} \tag{IV-10a}$$

acts as a pseudo-inverse for $\underset{\sim}{S}_r$ since direct calculation gives

$$\underset{\sim}{S}_r = \underset{\sim}{S}_r\,\underset{\sim}{S}_r^{\#}\,\underset{\sim}{S}_r\,, \qquad \underset{\sim}{S}_r^{\#} = \underset{\sim}{S}_r^{\#}\,\underset{\sim}{S}_r\,\underset{\sim}{S}_r^{\#} \tag{IV-10b}$$

Next consider the following sequence of operations which begins from Eq. (IV-6e).

$$\underset{\sim}{A}_i = \underset{\sim}{1}_{n,rn} (\underset{\sim}{\Omega}_n^i \underset{\sim}{S}_r) \underset{\sim}{\tilde{I}}_{m,rm} = \underset{\sim}{1}_{n,rn} \underset{\sim}{\Omega}_n^i \underset{\sim}{S}_r \underset{\sim}{S}_r^{\#} \underset{\sim}{S}_r \underset{\sim}{\tilde{I}}_{m,rm}$$

$$= \underset{\sim}{1}_{n,rn} \underset{\sim}{S}_r \underset{\sim}{\Omega}_m^i \underset{\sim}{S}_r^{\#} \underset{\sim}{S}_r \underset{\sim}{\tilde{I}}_{m,rm} = \underset{\sim}{1}_{n,rn} \underset{\sim}{S}_r \underset{\sim}{S}_r^{\#} \underset{\sim}{S}_r \underset{\sim}{\tilde{\Omega}}_m^i \underset{\sim}{S}_r^{\#} \underset{\sim}{S}_r \underset{\sim}{\tilde{I}}_{m,rm}$$

$$= (\underset{\sim}{1}_{n,rn} \underset{\sim}{S}_r \underset{\sim}{N} \underset{\sim}{\tilde{I}}_{\delta,rm})(\underset{\sim}{1}_{\delta,rn} \underset{\sim}{M} \underset{\sim}{S}_r \underset{\sim}{\tilde{\Omega}}_m^i \underset{\sim}{N} \underset{\sim}{\tilde{I}}_{\delta,rm})(\underset{\sim}{1}_{\delta,rn} \underset{\sim}{M} \underset{\sim}{S}_r \underset{\sim}{\tilde{I}}_{m,rm})$$

$$= \underset{\sim}{C} (\underset{\sim}{1}_{\delta,rn} \underset{\sim}{M} \underset{\sim}{\Omega}_n \underset{\sim}{S}_r \underset{\sim}{N} \underset{\sim}{\tilde{I}}_{\delta,rm})^i \underset{\sim}{B} = \underset{\sim}{C} \underset{\sim}{A}^i \underset{\sim}{B}$$

Here the next to the last step is justified by iteration of the result

$$\underset{\sim}{1}_{\delta,rn} \underset{\sim}{M} \underset{\sim}{S}_r \underset{\sim}{\tilde{\Omega}}_m^2 \underset{\sim}{N} \underset{\sim}{\tilde{I}}_{\delta,rm} = \underset{\sim}{1}_{\delta,rn} \underset{\sim}{M} \underset{\sim}{\Omega}_n \underset{\sim}{S}_r \underset{\sim}{S}_r^{\#} \underset{\sim}{S}_r \underset{\sim}{\tilde{\Omega}}_m \underset{\sim}{N} \underset{\sim}{\tilde{I}}_{\delta,rm}$$

$$= \underset{\sim}{1}_{\delta,rn} \underset{\sim}{M} \underset{\sim}{\Omega}_n \underset{\sim}{S}_r \underset{\sim}{N} \underset{\sim}{\tilde{I}}_{\delta,rm} \underset{\sim}{1}_{\delta,rn} \underset{\sim}{M} \underset{\sim}{\Omega}_n \underset{\sim}{S}_r \underset{\sim}{N} \underset{\sim}{\tilde{I}}_{\delta,rm}$$

As a consequence a realization has been obtained and it only remains to show that it is minimal.

For this latter demonstration let us introduce the ordinary observability and controllability matrices

$$\underset{\sim}{P} = [\underset{\sim}{\tilde{C}}, \underset{\sim}{\tilde{A}} \underset{\sim}{\tilde{C}}, \ldots, \underset{\sim}{\tilde{A}}^{r-1} \underset{\sim}{\tilde{C}}] , \quad \underset{\sim}{Q} = [\underset{\sim}{B}, \underset{\sim}{A} \underset{\sim}{B}, \ldots, \underset{\sim}{A}^{r-1} \underset{\sim}{B}] . \qquad \text{(IV-11)}$$

Then for any realization, since $\underset{\sim}{A}_i = \underset{\sim}{C} \underset{\sim}{A}^i \underset{\sim}{B}$, we find from direct multiplication that

$$\underset{\sim}{S}_r = \underset{\sim}{\tilde{P}} \underset{\sim}{Q} \qquad \text{(IV-12)}$$

Now suppose that there exists a realization having $\underset{\sim}{A}$ of size $k \times k$ with $k < \delta = \text{rank } \underset{\sim}{S}_r$. We have a contradiction since

$$\text{rank } \underset{\sim}{S}_r \leq \min [\text{rank } \underset{\sim}{P}, \text{ rank } \underset{\sim}{Q}] \leq k < \delta = \text{rank } \underset{\sim}{S}_r \qquad \text{(IV-13)}$$

where the middle inequality follows from $\underset{\sim}{P}$ and $\underset{\sim}{Q}$ being of sizes $k \times rm$. We conclude that the realization is the smallest possible with δ being what we have previously called the degree.

D. Examples

Consider the transfer function

$$\underset{\sim}{T}(p) = \begin{bmatrix} \dfrac{1}{p+1} \\ \\ \dfrac{1}{(p+1)(p+2)} \end{bmatrix} \qquad \text{(IV-14a)}$$

One procedure would be to connect a degree one realization between the input and first output and a degree two realization between the input and second output. However the final result would have a 3-dimensional state, which would not be minimal since, as we next show, two dimensions suffice. Hence we proceed to apply the theory of the previous section.

The least common denominator is

$$g(p) = p^2 + 3p + 2 = p^2 + a_2 p + a_1 \qquad \text{(IV-14b)}$$

Thus we have

$$m = 1 \quad , \qquad n = 2 \quad , \qquad r = 2 \qquad \text{(IV-14c)}$$

and for $\underset{\sim}{S}_r$ we must calculate the expansion of $\underset{\sim}{T}(p)$ about infinity up to $\underset{\sim}{A}_2$. We find by simply dividing the denominators into the numerators beginning with the highest powers of p

$$\underset{\sim}{T}(p) = \frac{1}{p}\begin{bmatrix} 1 \\ 0 \end{bmatrix} + \frac{1}{p^2}\begin{bmatrix} -1 \\ 1 \end{bmatrix} + \frac{1}{p^3}\begin{bmatrix} 1 \\ -3 \end{bmatrix} + \cdots$$

$$= \underset{\sim}{A}_{-1} + \frac{1}{p}\underset{\sim}{A}_0 + \frac{1}{p^2}\underset{\sim}{A}_1 + \frac{1}{p^3}\underset{\sim}{A}_2 + \cdots \qquad \text{(IV-14d)}$$

The Hankel matrix can then be formed

$$\underset{\sim}{S}_r = \begin{bmatrix} \underset{\sim}{A}_0 & \underset{\sim}{A}_1 \\ \underset{\sim}{A}_1 & \underset{\sim}{A}_2 \end{bmatrix} = \begin{bmatrix} \begin{bmatrix} 1 \\ 0 \end{bmatrix} & \begin{bmatrix} -1 \\ 1 \end{bmatrix} \\ \begin{bmatrix} -1 \\ 1 \end{bmatrix} & \begin{bmatrix} 1 \\ -3 \end{bmatrix} \end{bmatrix} \qquad \text{(IV-14e)}$$

and one finds by the use of elementary operations that

$$\underset{\sim}{M}\,\underset{\sim}{S}_r\,\underset{\sim}{N} = \begin{bmatrix} 1 & 0 & 0 & 0 \\ 0 & 1 & 0 & 0 \\ 1 & 0 & 1 & 0 \\ -1 & 2 & 0 & 1 \end{bmatrix} \begin{bmatrix} 1 & -1 \\ 0 & 1 \\ -1 & 1 \\ 1 & 3 \end{bmatrix} \begin{bmatrix} 1 & 1 \\ 0 & 1 \end{bmatrix} = \begin{bmatrix} 1 & 0 \\ 0 & 1 \\ 0 & 0 \\ 0 & 0 \end{bmatrix} \qquad \text{(IV-14-f)}$$

We also have

$$\underset{\sim}{1}_{\delta,rn} = \begin{bmatrix} 1 & 0 & 0 & 0 \\ 0 & 1 & 0 & 0 \end{bmatrix}, \qquad \underset{\sim}{1}_{\delta,rm} = \begin{bmatrix} 1 & 0 \\ 0 & 1 \end{bmatrix} = \underset{\sim}{1}_2 \qquad \text{(IV-14-g)}$$

The final matrix necessary for Eqs. (IV-9) is the companion matrix associated with $g(p)$.

$$\underset{\sim}{\Omega}_2 = \begin{bmatrix} 0 & 0 & 1 & 0 \\ 0 & 0 & 0 & 1 \\ -2 & 0 & -3 & 0 \\ 0 & -2 & 0 & -3 \end{bmatrix} \qquad \text{(IV-14h)}$$

We can then calculate the minimal realization using Eq. (IV-9)

$$\underset{\sim}{A} = \begin{bmatrix} 1 & 0 & 0 & 0 \\ 0 & 1 & 0 & 0 \end{bmatrix} \begin{bmatrix} 1 & 0 & 0 & 0 \\ 0 & 1 & 0 & 0 \\ 1 & 0 & 1 & 0 \\ -1 & 2 & 0 & 1 \end{bmatrix} \begin{bmatrix} 0 & 0 & 1 & 0 \\ 0 & 0 & 0 & 1 \\ -2 & 0 & -3 & 0 \\ 0 & -2 & 0 & -3 \end{bmatrix} \begin{bmatrix} 1 & -1 \\ 0 & 1 \\ -1 & 1 \\ 1 & -3 \end{bmatrix} \begin{bmatrix} 1 & 1 \\ 0 & 1 \end{bmatrix} = \begin{bmatrix} -1 & 0 \\ 1 & -2 \end{bmatrix}$$

(IV-15a)

$$\underset{\sim}{B} = \begin{bmatrix} 1 & 0 & 0 & 0 \\ 0 & 1 & 0 & 0 \end{bmatrix} \begin{bmatrix} 1 & 0 & 0 & 0 \\ 0 & 1 & 0 & 0 \\ 1 & 0 & 1 & 0 \\ -1 & 2 & 0 & 1 \end{bmatrix} \begin{bmatrix} 1 & -1 \\ 0 & 1 \\ -1 & 1 \\ 1 & -3 \end{bmatrix} \begin{bmatrix} 1 \\ 0 \end{bmatrix} = \begin{bmatrix} 1 \\ 0 \end{bmatrix}$$

(IV-15b)

$$\underset{\sim}{C} = \begin{bmatrix} 1 & 0 & 0 & 0 \\ 0 & 1 & 0 & 0 \end{bmatrix} \begin{bmatrix} 1 & -1 \\ 0 & 1 \\ -1 & 1 \\ 1 & -3 \end{bmatrix} \begin{bmatrix} 1 & 1 \\ 0 & 1 \end{bmatrix} \begin{bmatrix} 1 & 0 \\ 0 & 1 \end{bmatrix} = \begin{bmatrix} 1 & 0 \\ 0 & 1 \end{bmatrix}$$

(IV-15c)

$$\underset{\sim}{D} = \begin{bmatrix} 0 \\ 0 \end{bmatrix} \tag{IV-15d}$$

One can easily check that $\underset{\sim}{T}(p)$ results from this realization through the calculation of $\underset{\sim}{D} + \underset{\sim}{C}(p\,\underset{\sim}{1}_2 - \underset{\sim}{A})^{-1}\underset{\sim}{B}$.

By physically constructing, as in Chapter III, the canonical state variable equations

$$\begin{bmatrix} \dot{s}_1 \\ \dot{s}_2 \end{bmatrix} = \begin{bmatrix} -1 & 0 \\ 1 & -2 \end{bmatrix} \begin{bmatrix} s_1 \\ s_2 \end{bmatrix} + \begin{bmatrix} 1 \\ 0 \end{bmatrix} u \tag{IV-15e}$$

$$\begin{bmatrix} y_1 \\ y_2 \end{bmatrix} = \begin{bmatrix} 1 & 0 \\ 0 & 1 \end{bmatrix} \begin{bmatrix} s_1 \\ s_2 \end{bmatrix} \tag{IV-15f}$$

one can obtain a device with the given transfer function and which uses the minimum number of dynamical elements (capacitors, say, for integrated circuits).

Next let us consider the minimal realization of the general degree two scalar

$$T(p) = d + \frac{c_2 p + c_1}{p^2 + 2\zeta\omega_n p + \omega_n^2} \tag{III-6a}$$

which was previously considered (Fig. III-6). We have

$$m = n = 1 \quad , \qquad r = \delta = 2 \tag{IV-16a}$$

and Eqs. (IV-7) already give a minimal realization, as do Eqs. (IV-3) as well as Eqs. (III-6c). For Eqs. (IV-7) we have

$$\underset{\sim}{\Omega}_1 = \begin{bmatrix} 0 & 1 \\ -\omega_n^2 & -2\zeta\omega_n \end{bmatrix} \tag{IV-16b}$$

which follows on identification of terms from

$$g(p) = p^2 + 2\zeta\omega_n p + \omega_n^2 = p^2 + a_2 p + a_1 \tag{IV-16c}$$

Likewise

$$\underset{\sim}{S}_r = \begin{bmatrix} c_2 & c_1 - 2\zeta\omega_n c_2 \\ c_1 - 2\zeta\omega_n c_2 & 2\zeta\omega_n c_1 - (1+4\zeta^2)\omega_n^2 c_2 \end{bmatrix} \tag{IV-16d}$$

which follows from the expansion of $T(p)$ about infinity

$$T(p) = d + \frac{c_2}{p} + \frac{c_1 - 2\zeta\omega_n c_2}{p^2} + \frac{2\zeta\omega_n c_1 - (1+4\zeta^2)\omega_n^2 c_2}{p^3} + \ldots \tag{IV-16e}$$

Equations (IV-7) give

$$\underset{\sim}{A} = \underset{\sim}{\Omega}_1 = \begin{bmatrix} 0 & 1 \\ -\omega_n^2 & -2\zeta\omega_n \end{bmatrix}, \qquad \underset{\sim}{B} = \underset{\sim}{S}_r \underset{\sim}{\tilde{I}}_{m,rm} = \begin{bmatrix} c_2 \\ c_1 - 2\zeta\omega_n c_2 \end{bmatrix}$$

$$\underset{\sim}{C} = \underset{\sim}{1}_{n,rn} = [1 \quad 0], \qquad \underset{\sim}{D} = d \tag{IV-16f}$$

We observe that the calculations for Eq. (IV-9) are sometimes unnecessarily burdensome, as for example, in this case $\underset{\sim}{M}$ and $\underset{\sim}{N}$ are not even needed. Also from the simplicity of Eq. (III-6e) which has $\underset{\sim}{C} = [c_1, c_2]$ we see that perhaps there is a more convenient method (as yet undiscovered) for finding minimal realizations.

E. Discussion

Using a basic equation, (IV-6e), for a decomposition of the matrices $\underset{\sim}{A}_i$ obtained by expanding the transfer function $\underset{\sim}{T}(p)$ about infinity a generally nonminimal realization, Eq. (IV-7), is easily found from which simple but ingenious manipulations lead to a minimal realization, Eq. (IV-9). The matrix case is seen to be somewhat a generalization of the scalar situation where a minimal realization is relatively easily obtained by converting a higher order differential equation to a set of first order ones. Because the method proceeds in an algebraic manner directly from

the transfer function it is quite suitable for computer synthesis of systems, although as yet we are unaware of such a program being carried out. In fact it appears that it is worthwhile looking for improved methods, since, as the last example has shown, there are sometimes situations when easier calculations than those called for by the general theory can be used.

There are of course other methods of obtaining minimal realizations. One such is to augment $\underline{T}$ such that $m = n$, make appropriate frequency shifts and constant additions such that it is positive or bounded-real, and then give a minimal reactive synthesis of the result [2]. Other methods exist which work in the time domain from impulse response matrices [3][4]. But for the time-invariant case the procedure of Ho, given here, presents the most promising because of its possibilities for computer synthesis of systems. Nevertheless we will later, Chapter IX, briefly look at the time-domain for time-variable synthesis procedures.

At this point we have on hand the basic portions of the important theories. We have seen how to set up the canonical equations from a circuit, and now from a transfer function, and we have shown how to obtain a circuit from the canonical equations and thus from a transfer function. As a consequence our remaining topics are all associated with improvements and extensions of the basic results. We first look into methods of finding equivalents, which require more knowledge of the concepts of observability and controllability.

F. References

1. Ho, B. L., "On Effective Construction of Realizations from Input-Output Descriptions," Ph.D. Dissertation, Stanford University, March 1966.

2. Anderson, B. D. O., and R. W. Newcomb, "A Canonical Simulation of a Transfer Function Matrix," IEEE Transactions on Automatic Control, Vol. AC-11, No. 2, April 1966, pp. 319-320.

3. Youla, D. C., "The Synthesis of Linear Dynamical Systems from Prescribed Weighting Patterns," SIAM Journal, Vol. 14, No. 3, May 1966, pp. 527-549.

4. Desoer, C. A., and P. P. Varaiya, "The Minimal Realization of a Nonanticipative Impulse Response Matrix," SIAM Journal, Vol. 15, No. 3, May 1967, pp. 754-764.

G. Exercises

1. Find $\underset{\sim}{B}$ in compact form for Eq. (IV-3).
2. For the general degree two scalar transfer function, exhibit completely Eq. (IV-3) and compare with the several other results available.
3. Insert the modifications required for Eq. (IV-3) to hold for time-variable circuits.
4. Find a realization for

$$\underset{\sim}{T}(p) = \left[\frac{1}{p+1} \quad , \quad \frac{1}{(p+1)(p+2)}\right]$$

and compare with the results of Eq. (IV-15).

5. Find a realization for

$$T(p) = \begin{bmatrix} \dfrac{p-1}{p+1} \\ \dfrac{2}{p+a} \end{bmatrix}$$

for an arbitrary. What is the nature of the result when $a = 1$?

*6. Investigate the realization of $\underset{\sim}{T}(p)$ by factorization into degree one or two parts and the realization in minimal form of each part.

7. For Eq. (IV-15d) find $\underset{\sim}{M}$ and $\underset{\sim}{N}$ and determine a minimal realization using the general theory associated with this $\underset{\sim}{M}$ and $\underset{\sim}{N}$. Compare with the realization of Eq. (IV-15f).
8. Find a realization for $T(p) = 1/(p+1)$ and one for $T(p) = 1/(p+1)(p+2)$ and "connect" the two to obtain a realization for the text example of Eq. (IV-14a). Compare the result with that of the text and discuss with specific reference to minimality.

Il passe, entre duex êtres que se rencontrent
pour la première fois, d'étranges secrets
de vie et de mort; et bien d'autres secrets
qui n'ont pas encore de nom, mais qui
s'emparent immédiatement de notre
attitude, de nos regards et de notre
visage.

M. Maeterlinck
"Les Avertis" du "Tresor des Humbles"

CHAPTER V

EQUIVALENCE

A. Summary

Through the use of various transformations on the canonical state-variable equations one can generally find all canonical equation representations for a given transfer function. When the realizations are minimal this occurs through nonsingular transformations on the state. When it is a question of nonminimal equivalents, decompositions involving the "encirclement" of controllable and observable portions result.

B. Minimal Equivalents

Given a transfer function matrix $\underset{\sim}{T}(p)$ which is rational and having $\underset{\sim}{T}(\infty)$ well defined we have seen in the last chapter how to obtain a canonical set of state variable equations

$$\dot{\underset{\sim}{s}} = \underset{\sim}{A}\underset{\sim}{s} + \underset{\sim}{B}\underset{\sim}{u} \qquad \text{(I-11a)}$$

$$\underset{\sim}{y} = \underset{\sim}{C}\underset{\sim}{s} + \underset{\sim}{D}\underset{\sim}{u} \qquad \text{(I-11b)}$$

such that the state has minimal dimension, δ, and with

$$\underset{\sim}{T}(p) = \underset{\sim}{D} + \underset{\sim}{C}(p\underset{\sim}{1}_{\delta}-\underset{\sim}{A})^{-1}\underset{\sim}{B} \qquad \text{(I-11d)}$$

One problem of equivalence, and that which we treat here, is that of finding other realizations $R = \{\underset{\sim}{A}, \underset{\sim}{B}, \underset{\sim}{C}, \underset{\sim}{D}\}$, perhaps nonminimal, for which the above equations are true. Here in fact we will find all such realizations. However we first show how to find all minimal realizations.

Let us consider as on hand two minimal realizations $R = \{\underset{\sim}{A}, \underset{\sim}{B}, \underset{\sim}{C}, \underset{\sim}{D}\}$ and $\hat{R} = \{\hat{\underset{\sim}{A}}, \hat{\underset{\sim}{B}}, \hat{\underset{\sim}{C}}, \underset{\sim}{D}\}$ of a given transfer function $n \times m$ matrix $\underset{\sim}{T}(p)$. We define the observability, $\underset{\sim}{P}$ and $\hat{\underset{\sim}{P}}$, matrices and controllability, $\underset{\sim}{Q}$ and $\hat{\underset{\sim}{Q}}$, matrices as before, Eq. (IV-11); then we find

$$\underset{\sim}{S}_r = \underset{\sim}{\tilde{P}}\underset{\sim}{Q} = \underset{\sim}{\tilde{\hat{P}}}\underset{\sim}{\hat{Q}} \qquad \text{(V-1a)}$$

We also recall that $\underset{\sim}{P}$ and $\underset{\sim}{Q}$ have δ rows and are of rank δ, in which case $\underset{\sim}{Q}\underset{\sim}{\tilde{Q}}$, $\underset{\sim}{P}\underset{\sim}{\tilde{P}}$, and the same expressions in terms of $\hat{\underset{\sim}{P}}$ and $\hat{\underset{\sim}{Q}}$, are $\delta \times \delta$ nonsingular matrices. If we premultiply $\underset{\sim}{S}_r$ by $\underset{\sim}{P}$ we obtain

$$\underset{\sim}{Q} = [(\underset{\sim}{\tilde{P}}\underset{\sim}{P})^{-1}\underset{\sim}{P}\underset{\sim}{\tilde{\hat{P}}}]\hat{\underset{\sim}{Q}} = \underset{\sim}{T}\hat{\underset{\sim}{Q}} \qquad \text{(V-1b)}$$

which serves to define the transformation matrix $\underset{\sim}{T} = (\underset{\sim}{P}\underset{\sim}{\tilde{P}})^{-1}\underset{\sim}{P}\underset{\sim}{\tilde{\hat{P}}}$ which is nonsingular by the fact that

$$\underset{\sim}{S}_r = \underset{\sim}{\tilde{P}}\underset{\sim}{T}\hat{\underset{\sim}{Q}} = \underset{\sim}{\tilde{\hat{P}}}\hat{\underset{\sim}{Q}}$$

has rank δ and $\underset{\sim}{T}$ is $\delta \times \delta$. Postmultiplying both sides of this latter by the transpose of $\hat{\underset{\sim}{Q}}$ gives, on cancellation of the nonsingular matrix $\hat{\underset{\sim}{Q}}\hat{\underset{\sim}{Q}}$,

$$\hat{\underset{\sim}{P}} = \underset{\sim}{\tilde{P}}\underset{\sim}{T} \qquad \text{(V-1c)}$$

Since the first m columns in $\underset{\sim}{Q}$ are $\underset{\sim}{B}$ we conclude from Eq. (V-1b) that $\underset{\sim}{B} = \underset{\sim}{T}\hat{\underset{\sim}{B}}$. Likewise since the first n rows of $\underset{\sim}{\tilde{P}}$ are $\underset{\sim}{C}$ we have from Eq. (V-1c) that $\hat{\underset{\sim}{C}} = \underset{\sim}{C}\underset{\sim}{T}$. The canonical state variable equations are then

$$\dot{\underset{\sim}{s}} = \underset{\sim}{A}\underset{\sim}{s} + \underset{\sim}{T}\hat{\underset{\sim}{B}}\underset{\sim}{u} \qquad \dot{\hat{\underset{\sim}{s}}} = \hat{\underset{\sim}{A}}\hat{\underset{\sim}{s}} + \hat{\underset{\sim}{B}}\underset{\sim}{u} \qquad \text{(V-1d)}$$

$$\underset{\sim}{y} = \hat{\underset{\sim}{C}}\underset{\sim}{T}^{-1}\underset{\sim}{s} + \underset{\sim}{D}\underset{\sim}{u} \qquad \underset{\sim}{y} = \hat{\underset{\sim}{C}}\hat{\underset{\sim}{s}} + \underset{\sim}{D}\underset{\sim}{u} \qquad \text{(V-1e)}$$

It is then reasonable that the identification

$$\underset{\sim}{s} = \underset{\sim}{T}\hat{\underset{\sim}{s}} \tag{V-1f}$$

should be made, in which case $\underset{\sim}{T}^{-1}\underset{\sim}{A}\underset{\sim}{T}\hat{\underset{\sim}{s}} = \hat{\underset{\sim}{A}}\hat{\underset{\sim}{s}}$. As any initial state is allowed we can cancel the $\hat{\underset{\sim}{s}}$ to conclude that any two minimal realizations are related through a nonsingular transformation by the relationships

$$\hat{\underset{\sim}{A}} = \underset{\sim}{T}^{-1}\underset{\sim}{A}\underset{\sim}{T}, \qquad \hat{\underset{\sim}{B}} = \underset{\sim}{T}^{-1}\underset{\sim}{B}, \qquad \hat{\underset{\sim}{C}} = \underset{\sim}{C}\underset{\sim}{T} \tag{V-2a}$$

In other words, any two minimal realizations are given one in terms of the other through Eqs. (V-2a) where in fact

$$\underset{\sim}{T} = (\underset{\sim}{P}\tilde{\underset{\sim}{P}})^{-1}\underset{\sim}{P}\tilde{\hat{\underset{\sim}{P}}} \tag{V-2b}$$

By letting $\underset{\sim}{T}$ run through all nonsingular $\delta\times\delta$ matrices we obtain all minimal realizations from a given one.

We comment that previously we checked, at Eq. (I-11e), that this transformation, Eq. (V-2a), does leave the transfer function invariant.

As an example let us reconsider the Brune section of Chapter I for which

$$\dot{\underset{\sim}{s}} = \begin{bmatrix} 0 & -g_2/c_2 \\ g_2/c_1 & 0 \end{bmatrix}\underset{\sim}{s} + \begin{bmatrix} & 1 \\ g_1-g_2 & 0 \end{bmatrix}\underset{\sim}{u} \tag{I-9g}$$

$$\underset{\sim}{y} = \begin{bmatrix} -1/c_1 & 0 \\ 0 & (g_1-g_2)/c_2 \end{bmatrix}\underset{\sim}{s} + \begin{bmatrix} 1 & 0 \\ 0 & 1 \end{bmatrix}\underset{\sim}{u} \tag{I-9h}$$

If it is desired to have a skew-symmetric $\underset{\sim}{A}$ matrix we can set $\underset{\sim}{T} = \begin{bmatrix} t_{11} & t_{12} \\ t_{21} & t_{22} \end{bmatrix}$ and examine the set of (nonlinear in t_{ij}) entries in

$\underset{\sim}{T}^{-1}\underset{\sim}{A}\underset{\sim}{T}$ such that the result is skew-symmetric. We find a suitable $\underset{\sim}{T}$ as

$$\underset{\sim}{T} = \begin{bmatrix} \sqrt{c_1} & -\sqrt{c_1} \\ \sqrt{c_2} & \sqrt{c_2} \end{bmatrix} \tag{V-3a}$$

Thus, we find

$$\hat{\underset{\sim}{A}} = \underset{\sim}{T}^{-1}\underset{\sim}{A}\underset{\sim}{T} = \frac{g_2}{\sqrt{c_1 c_2}}\begin{bmatrix} 0 & -1 \\ 1 & 0 \end{bmatrix}, \qquad \hat{\underset{\sim}{B}} = \underset{\sim}{T}^{-1}\underset{\sim}{B} = \frac{1}{2}\begin{bmatrix} \dfrac{g_1-g_2}{\sqrt{c_1 c_2}} & \dfrac{1}{\sqrt{c_1}} \\ \dfrac{g_1-g_2}{\sqrt{c_1 c_2}} & \dfrac{-1}{\sqrt{c_2}} \end{bmatrix}$$

$$\hat{\underset{\sim}{C}} = \underset{\sim}{C}\underset{\sim}{T} = \begin{bmatrix} -1/\sqrt{c_1} & 1/\sqrt{c_1} \\ (g_1-g_2)/\sqrt{c_2} & (g_1-g_2)/\sqrt{c_2} \end{bmatrix} \tag{V-3b}$$

which we know yields an equivalent structure to the original Brune section.

C. Controllability and Observability

In order to proceed to nonminimal equivalents it is necessary to introduce the concepts of controllability and observability which we have already seen enter into the theory of equivalence through the matrices $\underset{\sim}{P}$ and $\underset{\sim}{Q}$.

To be somewhat precise we say that an initial state $\underset{\sim}{s}_1(t_o)$ is <u>controllable</u> if there exists a finite time t_1 and an input $\underset{\sim}{u}(t)$, $t_o \leq t \leq t_1$, such that $\underset{\sim}{s}_1(t) = \underset{\sim}{0}$ for $t \geq t_1$, that is, such that the state can be brought to zero (which is also the origin of the state space). By beginning on a trajectory of a controllable state starting at t_o we see that later values of time yield controllable initial states and hence we can work with controllable states $\underset{\sim}{s}(t)$ in which case we can decompose the state space into the set of controllable states

and those which are not, the uncontrollable states (this requires also letting t_1 tend to infinity).

On the other hand an initial state $\underset{\sim}{s}_1(t_o)$ is <u>observable</u> if there exists a finite time t_1 and a zero input output $\underset{\sim}{y}(t)$, $t_o \leq t \leq t_1$, such that a knowledge of $\underset{\sim}{y}(t)$ determines $\underset{\sim}{s}_1(t_o)$. Again we extend the concept to all times and hence can decompose the set of states into those which are observable and nonobservable.

Unfortunately the background concepts needed to derive useful results from these definitions are rather complicated so we will state some of the results omitting to some extent noncrucial proofs. As background we recall that a vector $\underset{\sim}{x}$ is in the nullspace of a matrix $\underset{\sim}{M}$ if $\underset{\sim}{M}\underset{\sim}{x} = \underset{\sim}{0}$. Considering the time-invariant case, a state $\underset{\sim}{s}(t_o)$ is controllable if it is not in the null-space of [1, p. 409]

$$\underset{\sim}{W}(t_o,t_1) = \int_{t_o}^{t_1} e^{\underset{\sim}{A}(t_o-t)}\underset{\sim}{B}\tilde{\underset{\sim}{B}}e^{\tilde{\underset{\sim}{A}}(t-t_o)}dt \qquad \text{(V-4a)}$$

Likewise a state is observable if it is not in the null-space of

$$\underset{\sim}{M}(t_o,t_1) = \int_{t_o}^{t_1} e^{\tilde{\underset{\sim}{A}}(t_o-t)}\tilde{\underset{\sim}{C}}\underset{\sim}{C}e^{\underset{\sim}{A}(t-t_o)}dt \qquad \text{(V-4b)}$$

One can see the validity of this latter, for example, by noting that the zero input-output is

$$\underset{\sim}{y}(t) = \underset{\sim}{C}e^{\underset{\sim}{A}(t-t_o)}\underset{\sim}{s}(t_o)$$

If we multiply by $\exp[\tilde{\underset{\sim}{A}}(t_o-t)]\tilde{\underset{\sim}{C}}$ and integrate we have

$$\int_{t_o}^{t_1} e^{\tilde{\underset{\sim}{A}}(t_o-t)}\underset{\sim}{C}\underset{\sim}{y}(t)dt = \underset{\sim}{M}(t_o,t_1)\underset{\sim}{s}(t_o)$$

from which $\underset{\sim}{s}(t_o)$ can be determined if it is not in the null-space of $\underset{\sim}{M}(t_o,t_1)$.

From the similarity in form and associated statements of $\underset{\sim}{W}$ and $\underset{\sim}{M}$ we see that the controllability and observability properties of

$$\dot{\underset{\sim}{s}} = \underset{\sim}{A}\underset{\sim}{s} + \underset{\sim}{B}\underset{\sim}{u} \qquad \text{(I-11a)}$$

$$\underset{\sim}{y} = \underset{\sim}{C}\underset{\sim}{s} + \underset{\sim}{D}\underset{\sim}{u} \qquad \text{(I-11b)}$$

are respectively the observability and controllability properties of the transposed system

$$\dot{\underset{\sim}{x}} = \underset{\sim}{A}\underset{\sim}{x} + \underset{\sim}{C}\underset{\sim}{u}_t \qquad \text{(V-5a)}$$

$$\underset{\sim}{y}_t = \underset{\sim}{B}\underset{\sim}{x} + \underset{\sim}{D}\underset{\sim}{u}_t \qquad \text{(V-5b)}$$

This result is customarily referred to as the principle of system <u>duality</u> and essentially means that we need to consider only one of the two concepts (controllability or observability) as independent.

Actually the matrices $\underset{\sim}{M}$ and $\underset{\sim}{W}$ are rather difficult to work with and have been only introduced to obtain the principle of duality which links the concepts. Equivalent results are expressed in terms of the observability and controllability matrices

$$\underset{\sim}{P} = [\underset{\sim}{C}, \underset{\sim}{A}\underset{\sim}{C}, \ldots, \underset{\sim}{A}^{k-1}\underset{\sim}{C}], \qquad \underset{\sim}{Q} = [\underset{\sim}{B}, \underset{\sim}{A}\underset{\sim}{B}, \ldots, \underset{\sim}{A}^{k-1}\underset{\sim}{B}] \qquad \text{(V-6)}$$

where k is the order of $\underset{\sim}{A}$. Thus the set of controllable (initial) states is the space spanned by the columns of $\underset{\sim}{Q}$ while the set of non-observable states is perpendicular to the space spanned by the columns of $\underset{\sim}{P}$ [2, pp. 500, 504]. These criterion are easier to apply, as compared to those for $\underset{\sim}{M}$ and $\underset{\sim}{W}$. We note that if $\underset{\sim}{P}$ and Q have rank k then all states are controllable and observable; in this situation it is actually true that the realization is minimal, $k = \nu$ (as $\underset{\sim}{S}_r$ of Eq. (IV-12) has rank k).

D. Nonminimal Equivalents

At this point we can turn to the general result. From two sections previous we know how to find all minimal equivalents so we are interested

in the cases where the dimension k of the state is larger than the minimum size δ. Such can occur when there are either uncontrollable or nonobservable states present, or both. Consequently it is convenient to partition the state vector $\underset{\sim}{s}$ into various canonical components, as

$$\underset{\sim}{\tilde{s}}_c = [\underset{\sim}{\tilde{s}}^{cn}, \underset{\sim}{\tilde{s}}^{co}, \underset{\sim}{\tilde{s}}^{un}, \underset{\sim}{\tilde{s}}^{uo}] \qquad \text{(V-6)}$$

where the superscript indices have the following meaning:

- c: controllable
- o: observable
- u: uncontrollable
- n: nonobservable

Thus, for example, $\underset{\sim}{s}^{uo}$ is the set of uncontrollable but observable states.

To accompany the partition of the states we can partition a given realization to obtain the canonical equations in the form

$$\begin{bmatrix} \dot{\underset{\sim}{s}}^{cn} \\ \dot{\underset{\sim}{s}}^{co} \\ \dot{\underset{\sim}{s}}^{un} \\ \dot{\underset{\sim}{s}}^{uo} \end{bmatrix} = \begin{bmatrix} \underset{\sim}{A}_{11} & \underset{\sim}{A}_{12} & \underset{\sim}{A}_{13} & \underset{\sim}{A}_{14} \\ \underset{\sim}{A}_{21} & \underset{\sim}{A}_{22} & \underset{\sim}{A}_{23} & \underset{\sim}{A}_{24} \\ \underset{\sim}{A}_{31} & \underset{\sim}{A}_{32} & \underset{\sim}{A}_{33} & \underset{\sim}{A}_{34} \\ \underset{\sim}{A}_{41} & \underset{\sim}{A}_{42} & \underset{\sim}{A}_{43} & \underset{\sim}{A}_{44} \end{bmatrix} \begin{bmatrix} \underset{\sim}{s}^{cn} \\ \underset{\sim}{s}^{co} \\ \underset{\sim}{s}^{un} \\ \underset{\sim}{s}^{uo} \end{bmatrix} + \begin{bmatrix} \underset{\sim}{B}_1 \\ \underset{\sim}{B}_2 \\ \underset{\sim}{B}_3 \\ \underset{\sim}{B}_4 \end{bmatrix} \underset{\sim}{u} \qquad \text{(V-7a)}$$

$$\underset{\sim}{y} = [\underset{\sim}{C}_1 \ \underset{\sim}{C}_2 \ \underset{\sim}{C}_3 \ \underset{\sim}{C}_4] \begin{bmatrix} \underset{\sim}{s}^{cn} \\ \underset{\sim}{s}^{co} \\ \underset{\sim}{s}^{un} \\ \underset{\sim}{s}^{uo} \end{bmatrix} + \underset{\sim}{D}\underset{\sim}{u} \qquad \text{(V-7b)}$$

In order to have the state $\underset{\sim}{s}$ partitioned in the form given by Eq. (V-6) generally requires that a transformation be performed upon the state. But once such a partition has been performed we see from the physical meaning of controllability and observability that $\underset{\sim}{B}_3$, $\underset{\sim}{B}_4$, $\underset{\sim}{C}_1$, $\underset{\sim}{C}_3$ are zero. Also since there should be no way for the input to couple to the uncontrollable states, $\underset{\sim}{A}_{31}$, $\underset{\sim}{A}_{32}$, $\underset{\sim}{A}_{41}$ and $\underset{\sim}{A}_{42}$ are also zero. Since also the nonobservable states should not be seen at the output even after coupling through observable states we find $\underset{\sim}{A}_{21}$, $\underset{\sim}{A}_{23}$ and

$\underset{\sim}{A}_{43}$ are also zero. Thus we can obtain the decomposition

$$\begin{bmatrix} \dot{\underset{\sim}{s}}^{cn} \\ \dot{\underset{\sim}{s}}^{co} \\ \dot{\underset{\sim}{s}}^{um} \\ \dot{\underset{\sim}{s}}^{uo} \end{bmatrix} = \begin{bmatrix} \underset{\sim}{A}_{11} & \underset{\sim}{A}_{12} & \underset{\sim}{A}_{13} & \underset{\sim}{A}_{14} \\ \underset{\sim}{0} & \underset{\sim}{A}_{22} & \underset{\sim}{0} & \underset{\sim}{A}_{24} \\ \underset{\sim}{0} & \underset{\sim}{0} & \underset{\sim}{A}_{33} & \underset{\sim}{A}_{34} \\ \underset{\sim}{0} & \underset{\sim}{0} & \underset{\sim}{0} & \underset{\sim}{A}_{44} \end{bmatrix} \begin{bmatrix} \underset{\sim}{s}^{cn} \\ \underset{\sim}{s}^{co} \\ \underset{\sim}{s}^{um} \\ \underset{\sim}{s}^{uo} \end{bmatrix} + \begin{bmatrix} \underset{\sim}{B}_1 \\ \underset{\sim}{B}_2 \\ \underset{\sim}{0} \\ \underset{\sim}{0} \end{bmatrix} \underset{\sim}{u} \qquad \text{(V-8a)}$$

$$\underset{\sim}{y} = [\underset{\sim}{0}\ \underset{\sim}{C}_2\ \underset{\sim}{0}\ \underset{\sim}{C}_4] \begin{bmatrix} \underset{\sim}{s}^{cn} \\ \underset{\sim}{s}^{co} \\ \underset{\sim}{s}^{um} \\ \underset{\sim}{s}^{uo} \end{bmatrix} + \underset{\sim}{D}\underset{\sim}{u} \qquad \text{(V-8b)}$$

Equations (V-8) give a canonical form for realizations of a given transfer function $\underset{\sim}{T}(p)$ when the state has nonminimal size. They can be obtained from any other realization by a transformation $\underset{\sim}{T}_c$ applied to the state $\underset{\sim}{s}$ [3, p. 172]

$$\underset{\sim}{s} = \underset{\sim}{T}_c \underset{\sim}{s}_c \qquad \text{(V-8c)}$$

To actually find $\underset{\sim}{T}_c$ there are fixed procedures, but we remark that the dimensions of the four subcomponents of $\underset{\sim}{s}_c$ can be determined from $\underset{\sim}{P}$ and $\underset{\sim}{Q}$ in which case one can solve for $\underset{\sim}{T}_c$ by hunting for a canonical realization $R_c = \{\underset{\sim}{A}_c, \underset{\sim}{B}_c, \underset{\sim}{C}_c, \underset{\sim}{D}\}$, that is, one of the form of Eqs. (V-8a,b), in terms of a given one $R = \{\underset{\sim}{A}, \underset{\sim}{B}, \underset{\sim}{C}, \underset{\sim}{D}\}$ by applying the result

$$\underset{\sim}{T}_c \underset{\sim}{A}_c = \underset{\sim}{A}\underset{\sim}{T}_c, \qquad \underset{\sim}{T}_c \underset{\sim}{B}_c = \underset{\sim}{B}, \qquad \underset{\sim}{C}_c = \underset{\sim}{C}\underset{\sim}{T}_c \qquad \text{(V-8d)}$$

which holds since Eq. (V-8c) is valid.

The important point to observe is that only the matrices of a minimal realization $R_m = \{\underset{\sim}{A}_{22}, \underset{\sim}{B}_2, \underset{\sim}{C}_2, \underset{\sim}{D}\}$ enter into $\underset{\sim}{T}(p)$, that is since

$$\underset{\sim}{T}(p) = \underset{\sim}{D} + \underset{\sim}{C}(p\underset{\sim}{1}_k - \underset{\sim}{A})^{-1}\underset{\sim}{B} = \underset{\sim}{D} + \underset{\sim}{C}_2(p\underset{\sim}{1}_k - \underset{\sim}{A}_{22})^{-1}\underset{\sim}{B}_2 \qquad \text{(V-9)}$$

the other nonzero entries of R_c are completely arbitrary. Thus, given any minimal realization we can find all other realizations, nonminimal or not, by "encircling" the minimal one arbitrarily but as required by Eqs. (V-8a,b) and then transforming by arbitrary (nonsingular) $\underset{\sim}{T}_c$ as required by Eq. (V-8d). This being the case we can derive any realization $\hat{R}$ from any other R as shown in Fig. V-1 [4].

$$R \xrightarrow[\underset{\sim}{T}_c]{\text{basis change}} R_c \xrightarrow{\text{minimal extraction}} R_m \xrightarrow[\underset{\sim}{T}]{\text{basis change}} \hat{R}_m \xrightarrow{\text{encirclement}} \hat{R}_c \xrightarrow[\hat{\underset{\sim}{T}}_c]{\text{basis change}} \hat{R}$$

Equivalence for Two Realizations R and $\hat{R}$

Figure V-1

Of most practical interest to us is the derivation of nonminimal realizations from minimal ones. Since we can readily find a minimal realization the procedure of encirclement is convenient for taking a given transfer function $\underset{\sim}{T}(p)$ and finding all realizations. Note that Eq. (V-9) shows that minimal realizations have all state components controllable and observable.

As an example, the circuit of Fig. V-2 has

$$\dot{s} = -s+u \tag{V-10a}$$

$$y = s \tag{V-10b}$$

If for some reason one were to want a configuration using two capacitors, perhaps to be used jointly for some other purpose, but with only observable portions one could proceed from

$$\begin{bmatrix} \dot{s}^{co} \\ \dot{s}^{uo} \end{bmatrix} = \begin{bmatrix} -1 & \alpha \\ 0 & \beta \end{bmatrix} \begin{bmatrix} s^{co} \\ s^{uo} \end{bmatrix} + \begin{bmatrix} 1 \\ 0 \end{bmatrix} u \tag{V-10c}$$

$$y = \begin{bmatrix} 1 & \gamma \end{bmatrix} \begin{bmatrix} s^{co} \\ s^{uo} \end{bmatrix} \tag{V-10d}$$

One can easily check that these two sets of canonical equations yield the same transfer function. To obtain the most general realization of the type required one next can apply the transformation of Eq. (V-6d).

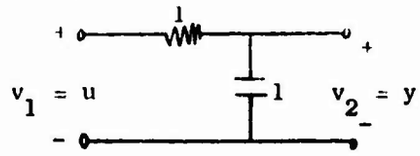

Example Circuit

Figure V-2

In Eqs. (V-10) we comment that α, β, γ are arbitrary constants. However, if $\gamma = 0$ then s^{uo} is not observable so that there is some further constraint placed on the arbitrariness of the matrix $\underset{\sim}{C}_1$; this constraint we believe remains to be determined but should be expressable in terms of the observability matrix $\underset{\sim}{P}$.

From Section III-d) we know that for $u = v_1$ and $y = i$ the equations of Eq. (V-10) can be physically realized by loading a circuit realization of the coupling admittance matrix

$$\underset{\sim}{Y}_c = \begin{bmatrix} 0 & -1 & -\gamma \\ 1 & 1 & -\alpha \\ 0 & 0 & -\beta \end{bmatrix} \qquad \text{(V-10e)}$$

in two unit capacitors. To obtain the output as a voltage one can then insert a resistor and its negative in series with the source to convert $y = i$ to $y = v_2$, as shown in Fig. V-3. Such gives an alternate but not too practical realization scheme.

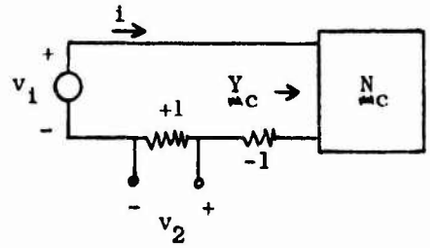

Augmentation to Convert to Voltage Output

Figure V-3

E. Discussion

Given one set of canonical state variable equations we have shown in this chapter how to find all others possessing the same transfer function. Since we have previously seen how to find one realization, in fact minimal, from a transfer function, we are now in a position to find all state variable realizations from a given transfer function. In some sense then we have found all equivalents.

However in another sense we have not completed the picture since we have not shown how to find all physical circuits yielding a given set of canonical equations. To be sure there are several since, for example, we can give an analog simulation or we can synthesize a resistive coupling network to load in capacitors and indeed these two methods yield different structures. However, one can apply the standard theory of Howitt [5] to generally find all physical resistive coupling circuits, the ones containing operational amplifiers usually being included in the result.

The theory has been given for time-invariant systems. The primary reason for excluding time-variable ones at this point is that one can not generally expect the decomposition of the state into the components $\tilde{\underset{\sim}{s}} = [\tilde{\underset{\sim}{s}}^{cn}, \tilde{\underset{\sim}{s}}^{co}, \tilde{\underset{\sim}{s}}^{un}, \tilde{\underset{\sim}{s}}^{uo}]$ to hold for all time unless there is some restriction placed upon the system. Of course time-invariance is a sufficient restriction in which case a constant transformation exists to bring the realization into canonical form. Nevertheless much can be said about the time-variable case where the use of proper transformations, which may be time-variable even in the time-invariant case, yields a different canonical form [6]. Perhaps the flow pattern of Fig. V-4 is of interest in depicting the structure of the actual decomposition.

The somewhat complete nature of the equivalence results, which have not been obtained by other means, should give sufficient justification for the existence and study of state variable theory. Nevertheless the concepts of controllability and observability can be expressed in terms of cancellations in $[p\underset{\sim}{1}_k - \underset{\sim}{A}]^{-1}\underset{\sim}{B}$ and $\underset{\sim}{C}[p\underset{\sim}{1}_k - \underset{\sim}{A}]^{-1}$, respectively [1, pp. 389, 408]. Likewise, if internal variables are considered in an $\underset{\sim}{\mathcal{A}}\underset{\sim}{v} = \underset{\sim}{\mathcal{B}}\underset{\sim}{i}$ description the concepts can be expressed in terms of the $\underset{\sim}{\mathcal{A}}$ and $\underset{\sim}{\mathcal{B}}$ matrices [7].

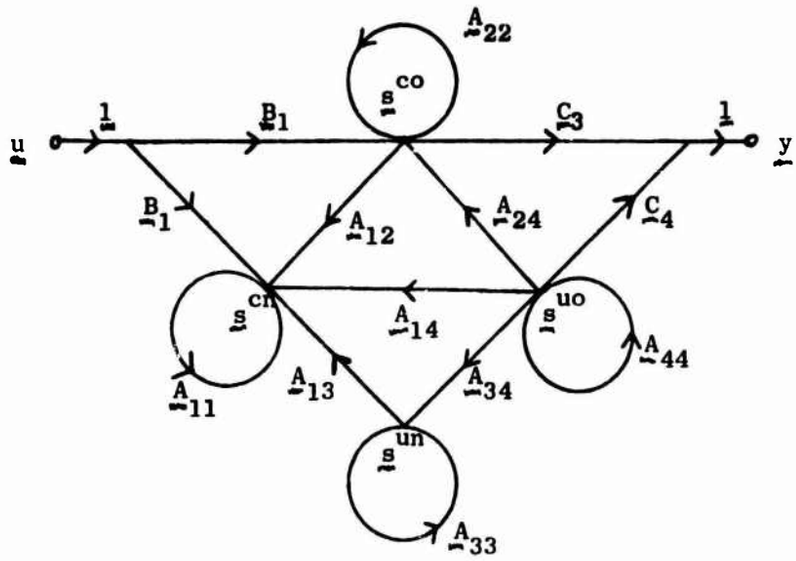

Flow Pattern for Canonical Realization

Figure V-4

In summary, using the dual concepts of controllability and observability we have been able to obtain a feeling for the internal structure of time-invariant systems through the form of canonical realizations. Using the results we have also been able to obtain all canonical state variable equations, thus allowing a designer maximum freedom of choice to obtain a desired circuit configuration.

F. References

1. Ogata, K., "State Space Analysis of Control Systems," Prentice-Hall, Englewood Cliffs (N.J.), 1967.
2. Zadeh, L. A., and C. A. Desoer, "Linear System Theory," McGraw-Hill, New York, 1963.
3. Kalman, R. E., "Mathematical Description of Linear Dynamical Systems," Journal of SIAM Control, Vol. 1, No. 2, 1963, pp. 152-192.
4. Anderson, B. D. O., R. Newcomb, R. E. Kalman, and D. C. Youla, "Equivalence of Linear Time-Invariant Dynamical Systems," Journal of the Franklin Institute, Vol. 281, No. 5, May 1966, pp. 371-378.
5. Howitt, N., "Group Theory and the Electric Circuit," Physical Review, Vol. 37, June 15, 1931, pp. 1583-1595.

6. Youla, D. C., "The Synthesis of Linear Dynamical Systems from Prescribed Weighting Patterns," SIAM Journal, Vol. 14, No. 3, May 1966, pp. 527-549.

7. Belevitch, V., "Classical Network Theory," Holden-Day, 1968.

G. Exercises

1. Complete two syntheses of the canonical equations of Eq. (V-10). Compare the results and discuss relationships between them.
2. Find all canonical equations using two state parameters for equivalents to the circuit of Fig. V-2. What changes if an arbitrary number of capacitors are allowed?
3. Suppose that it is possible to find a time-variable transformation $\underset{\sim}{T}_c(t)$ to bring the state to the canonical form of Eq. (V-6). Discuss the changes in Eqs. (V-8) and Fig. V-1.
4. Discuss why the basis change $\underset{\sim}{T}$ for Fig. V-1 could actually be omitted from the figure.
5. Show how $\underset{\sim}{T}_c$ can be created, at least to a great extent, directly from $\underset{\sim}{P}$ and $\underset{\sim}{Q}$ [4, p. 374].
6. Find all equivalents for the integrator of Fig. III-4a) and discuss factors influencing the choice of one over another.

Rein n'est visible et cependant nous voyons tout. Ils ont peur de nous, parce que nous les avertissons sans cesse et malgré nous; et à peine les avons-nous abordés qu'ils sentent que nous réagissons contre leur avenir.

M. Maeterlinck
"Les Avertis" du "Tresor des Humbles"

CHAPTER VI

SENSITIVITY AND TRANSITION MATRICES

A. Summary

Using the canonical equations transfer function sensitivity can be conveniently expressed, this being done here for scalar transfer functions. Time domain calculations can also be made in which case convenient methods of computation for fundamental matrices are also presented.

B. Scalar Transfer Function Sensitivity

In terms of precent changes it is of interest to know how much a transfer function changes with a given change in some parameter. Thus, for transistor circuits it is of interest often to know the effects of replacing one transistor by another one having the same characteristics except for a different current gain, β. Or alternatively with integrated circuits one would desire to know how the overall performance is affected by a change in temperature. To study such, the sensitivity of a (scalar) transfer function $T(p)$ to a parameter x has been defined as [1]

$$S_x^{T(p)} = \frac{x}{T(p)} \frac{\partial T(p)}{\partial x} \qquad \text{(VI-1)}$$

Note that in this definition the sensitivity is a complex valued function of a complex variable p. In most cases of interest one really desires to know the behavior of the magnitude of the transfer function for sinusoidal signals, that is the actually desired quantity is $S_x^{|T(j\omega)|}$.

However this latter is analytically difficult to work with and one does have the relationships

$$S_x^{T(p)} = S_x^{|T(p)|} + jx\frac{\partial \measuredangle T(p)}{\partial x} \qquad \text{(VI-2a)}$$

and

$$|S_x^{T(p)}| \geq |S_x^{|T(p)|}| \qquad \text{(VI-2b)}$$

both of which are relatively easy to check.

The sensitivity can be evaluated in terms of a state space realization through differentiation of

$$T(p) = D + \underset{\sim}{C}(p\underset{\sim}{1}_k - \underset{\sim}{A})^{-1}\underset{\sim}{B} \qquad \text{(VI-3a)}$$

If for any matrix $\underset{\sim}{G}$ we realize that

$$\frac{\partial \underset{\sim}{G}^{-1}}{\partial x} = -\underset{\sim}{G}^{-1}\frac{\partial \underset{\sim}{G}}{\partial x}\underset{\sim}{G}^{-1} \qquad \text{(VI-3b)}$$

then we obtain

$$\begin{aligned}\frac{\partial T}{\partial x} = \frac{\partial D}{\partial x} &+ \frac{\partial \underset{\sim}{C}}{\partial x}(p\underset{\sim}{1}_k - \underset{\sim}{A})^{-1}\underset{\sim}{B} + \underset{\sim}{C}(p\underset{\sim}{1}_k - \underset{\sim}{A})^{-1}\frac{\partial \underset{\sim}{A}}{\partial x}(p\underset{\sim}{1}_k - \underset{\sim}{A})^{-1}\underset{\sim}{B} \\ &+ \underset{\sim}{C}(p\underset{\sim}{1}_k - \underset{\sim}{A})^{-1}\frac{\partial \underset{\sim}{B}}{\partial x}\end{aligned} \qquad \text{(VI-4)}$$

We observe that, except for the derivations, the only operations involved are those already used in forming the transfer function from the realization. Consequently, this method of determining the sensitivity is quite applicable to computer analysis of circuits where we have previously seen that there are convenient methods of obtaining the realization $R = \{\underset{\sim}{A}, \underset{\sim}{B}, \underset{\sim}{C}, D\}$ from the circuit diagram. We observe, for example, that if the realization is set up in the special form of Eq. (IV-3) where $\underset{\sim}{C} = [1, 0, \ldots, 0]$, then $\partial\underset{\sim}{C}/\partial x = \underset{\sim}{0}$ while $\partial\underset{\sim}{A}/\partial x$ also takes a simple form (having only nonzero entries in the last row).

As an example let us consider the sensitivity to the damping factor ζ of

$$T(p) = \frac{1}{p^2 + 2\zeta\omega_n p + \omega_n^2} \qquad \text{(VI-5a)}$$

From Eq. (IV-15f) we have

$$\underset{\sim}{A} = \begin{bmatrix} 0 & 1 \\ -\omega_n^2 & -2\zeta\omega_n \end{bmatrix}, \quad \underset{\sim}{B} = \begin{bmatrix} 0 \\ 1 \end{bmatrix}, \quad \underset{\sim}{C} = [1, 0], \quad D = 0 \qquad \text{(VI-5b)}$$

Then we have

$$(p\underset{\sim}{1}_2 - \underset{\sim}{A})^{-1} = T(p)\begin{bmatrix} p+2\zeta\omega_n & 1 \\ -\omega_n^2 & p \end{bmatrix}, \quad \frac{\partial \underset{\sim}{A}}{\partial \zeta} = \begin{bmatrix} 0 & 0 \\ 0 & -2\omega_n \end{bmatrix} \qquad \text{(VI-5c)}$$

in which case Eq. (VI-4) gives

$$S_\zeta^T = \frac{\zeta}{T}\{\underset{\sim}{C}(p\underset{\sim}{1}_2 - \underset{\sim}{A})^{-1} \frac{\partial \underset{\sim}{A}}{\partial \zeta}(p\underset{\sim}{1}_2 - \underset{\sim}{A})^{-1}\underset{\sim}{B}] = -2\zeta\omega_n pT(p) \qquad \text{(VI-5d)}$$

If the sensitivity is desired at $p = j\omega_n$ we find $|S_\zeta^{T(j\omega_n)}| = 1 \geq |S_\zeta^{|T(j\omega_n)|}|$ in which case a 1% change in ζ causes no more than a 1% change in $|T(j\omega_n)|$. Note also that the sensitivity is zero at both zero and infinity frequencies. Of course we could have obtained the same results by differentiating $T(p)$ with respect to ζ directly. But if $T(p)$ is available in terms of the canbnical equations and calculated in terms of a digital computer, this direct method of calculating the sensitivity generally calls for added routines over that using Eq. (VI-4).

C. Pole Position Sensitivities

A useful set of design parameters is the set of pole position sensitivities defined through

$$s_x^{p_k} = \frac{\partial p_k}{\partial x} \qquad \text{(VI-6)}$$

where p_k is a pole of the transfer function $T(p)$. In general the poles of $T(p)$ are eigenvalues of $\underset{\sim}{A}$ or, what is the same, zeros of the determinant $\Delta(p)$ of $p\underset{\sim}{1}_k - \underset{\sim}{A}$. If we assume that p_k is a simple eigenvalue of $\underset{\sim}{A}$ then we can evaluate the pole sensitivity $s_x^{p_k}$ for p_k with respect to x as follows. We have, which serves to define the polynomial $K(p)$,

$$\Delta(p) = (p-p_k)K(p), \qquad K(p_k) \neq 0 \tag{VI-7a}$$

on differentiation

$$\frac{\partial\Delta(p)}{\partial x} = (p-p_k)\frac{\partial K(p)}{\partial x} - \frac{\partial p_k}{\partial x}K(p) \tag{VI-7b}$$

Solving for $\partial p_k/\partial x$ on letting $p = p_k$ gives, on noting that $K(p_k) = \partial\Delta(p)/\partial p$ evaluated at $p = p_k$,

$$s_x^{p_k} = \frac{p_k}{x} = -\left.\frac{\partial\Delta(p)/\partial x}{\partial\Delta(p)/\partial p}\right|_{p = p_k} \tag{VI-7c}$$

where

$$\Delta(p) = \det(p\underset{\sim}{1}_k - \underset{\sim}{A}) \tag{VI-7d}$$

As a consequence the pole position sensitivity is relatively easily evaluated in terms of the $\underset{\sim}{A}$ matrix and with the use of a computer [2].

To illustrate the situation let us again consider the transfer function of Eq. (VI-5a), we have

$$\Delta(p) = \det(p\underset{\sim}{1}_2 - \underset{\sim}{A}) = p^2 + 2\zeta\omega_n p + \omega_n^2 \tag{VI-8a}$$

and thus

$$\partial\Delta(p)/\partial\zeta = 2\omega_n p, \qquad \partial\Delta(p)/\partial p = 2p + 2\zeta\omega_n \tag{VI-8b}$$

There are two poles of $T(p)$, let us consider

$$p_1 = -\omega_n[\zeta + \sqrt{\zeta^2-1}] \qquad \text{(VI-8c)}$$

Then Eq. (VI-7c) gives

$$s_\zeta^{p_1} = \omega_n\left[\frac{\zeta + \sqrt{\zeta^2-1}}{\sqrt{\zeta^2-1}}\right] \qquad \text{(VI-8d)}$$

D. Time-Domain Variations

In many situations the quantity of most importance is the actual output change as a function of time due to a parameter change. In such situations the canonical state variable equations

$$\dot{\underset{\sim}{s}} = \underset{\sim}{A}\underset{\sim}{s} + \underset{\sim}{B}u \qquad \text{(VI-9a)}$$

$$y = \underset{\sim}{C}\underset{\sim}{s} + Du \qquad \text{(VI-9b)}$$

can advantageously be used.

Again let us consider a parameter x, as well as constant (in time) realization matrices $\underset{\sim}{A}$, $\underset{\sim}{B}$, $\underset{\sim}{C}$, D, the last one being a scalar by virtue of our treatment of single input single output systems. Then we find on differentiation with respect to x

$$\frac{\partial}{\partial t}\left(\frac{\partial \underset{\sim}{s}}{\partial x}\right) = \underset{\sim}{A}\left(\frac{\partial \underset{\sim}{s}}{\partial x}\right) + \left[\frac{\partial \underset{\sim}{A}}{\partial x}\underset{\sim}{s} + \frac{\partial \underset{\sim}{B}}{\partial x}u\right] \qquad \text{(VI-10a)}$$

$$\frac{\partial y}{\partial x} = \underset{\sim}{C}\left(\frac{\partial \underset{\sim}{s}}{\partial x}\right) + \frac{\partial \underset{\sim}{C}}{\partial x}\underset{\sim}{s} + \frac{\partial D}{\partial x}u \qquad \text{(VI-10b)}$$

To determine $\partial y/\partial x$ we can first solve Eq. (VI-9a) for $\underset{\sim}{s}$ and then Eq. (VI-10a) for $\partial \underset{\sim}{s}/\partial x$. The important thing to observe is that the same matrix $\underset{\sim}{A}$ occurs in the two situations, only the forcing functions differ being $\underset{\sim}{B}u$ in the first case and $(\partial \underset{\sim}{A}/\partial x)\underset{\sim}{s} + (\partial \underset{\sim}{B}/\partial x)u$ in the second.

The problem in this case is one of solving the differential equation $\dot{\underset{\sim}{z}} = \underset{\sim}{A}\underset{\sim}{z} + \underset{\sim}{f}$ with $\underset{\sim}{f}$ known. Such solutions are obtained in a straight-

forward manner, and are in fact conveniently obtained on a digital computer, as discussed in the next section. Consequently, the variations in the output, $\delta y/\delta x$, as a function of time are conveniently obtained. Of course they can also be normalized, as for the transfer function, to give percent changes if so desired.

E. Transition Matrix Evaluation

Theoretically it is a relatively simple matter to solve the differential equation

$$\dot{\underset{\sim}{z}} = \underset{\sim}{A}\underset{\sim}{z} + \underset{\sim}{f} \qquad \text{(VI-11a)}$$

where $\underset{\sim}{f}$ is a known forcing function independent of $\underset{\sim}{x}$ and $\underset{\sim}{A}$ is a square $k \times k$ matrix, also independent of $\underset{\sim}{x}$ but perhaps not of time. To solve Eq. (VI-11a), which is the type of equation appearing in Eqs. (VI-9a, 10a), we first solve the equation

$$\dot{\underset{\sim}{Z}} = \underset{\sim}{A}\underset{\sim}{Z}, \qquad \underset{\sim}{Z}(t_o) = \underset{\sim}{1}_k \qquad \text{(VI-11b)}$$

which is the original one with the k-vector $\underset{\sim}{x}$ replaced by the $k \times k$ matrix $\underset{\sim}{Z}$, without the forcing function and with the identity matrix for initial conditions. The solution to the latter equation can be denoted by $\underset{\sim}{\Phi}(t,t_o)$ and is called the <u>transition matrix</u> for the system. In the case where $\underset{\sim}{A}$ is constant in time this transition matrix can be explicitly evaluated as

$$\underset{\sim}{\Phi}(t,t_o) = e^{\underset{\sim}{A}(t-t_o)}, \quad \text{constant } \underset{\sim}{A} \qquad \text{(VI-12a)}$$

where the exponential of a matrix is defined precisely by

$$e^{\underset{\sim}{A}t} = \underset{\sim}{1}_k + \underset{\sim}{A}t + \underset{\sim}{A}^2 \frac{t^2}{2!} + \ldots + \underset{\sim}{A}^i \frac{t^i}{i!} + \ldots \qquad \text{(VI-12b)}$$

In fact one can directly check that the exponential transition matrix of Eq. (VI-12a) does solve the unforced differential equation of (VI-11b).

As an example, if as in Eq. (V-3b) we have

$$\underset{\sim}{A} = a\begin{bmatrix} 0 & -1 \\ 1 & 0 \end{bmatrix} \qquad \text{(VI-13a)}$$

then

$$\underset{\sim}{A}^2 = a^2\begin{bmatrix} -1 & 0 \\ 0 & -1 \end{bmatrix}, \quad \underset{\sim}{A}^3 = a^3\begin{bmatrix} 0 & 1 \\ -1 & 0 \end{bmatrix}, \quad \underset{\sim}{A}^4 = a^4\underset{\sim}{1}_2, \quad \underset{\sim}{A}^5 = a^5\underset{\sim}{A} \qquad \text{(VI-13b)}$$

in which case Eq. (VI-12b) gives

$$e^{\underset{\sim}{A}t} = \begin{bmatrix} 1-a^2t^2/2!+a^4t^4/4!+\ldots & -at+a^3t^3/3!-a^5t^5/5!+\ldots \\ at-a^3t^3/3!+a^5t^5/5!+\ldots & 1-a^2t^2/2!+a^4t^4/4!+\ldots \end{bmatrix}$$

$$= \begin{bmatrix} \cos jat & -j\sin jat \\ j\sin jat & \cos jat \end{bmatrix} \qquad \text{(VI-13c)}$$

In the case of the zero input situation with k-vector $\underset{\sim}{z}$ we simply multiply $\underset{\sim}{Z}(t_o)$ by $\underset{\sim}{z}(t_o)$ to get

$$\underset{\sim}{z}(t) = \underset{\sim}{\Phi}(t,t_o)\underset{\sim}{z}(t_o) \qquad \text{(VI-14)}$$

which yields the zero input response. If $\underset{\sim}{f} \neq \underset{\sim}{0}$, then by treating $\underset{\sim}{z}$ as the output we can apply the fundamental decomposition of Eq. (I-4). In the time-invariant case we then wish to convolute the impulse response $\underset{\sim}{\Phi}(t,0)1(t)$ with $\underset{\sim}{f}(t)$, where $1(t)$ is the unit-step function. Thus the general solution of interest to Eq. (V-11a) is

$$\underset{\sim}{z}(t) = e^{\underset{\sim}{A}(t-t_o)}\underset{\sim}{z}(t_o) + \int_{t_o}^{t} e^{\underset{\sim}{A}(t-\tau)}\underset{\sim}{f}(\tau)d\tau, \quad t > t_o \qquad \text{(VI-15)}$$

One can check that this latter is a solution by direct substitution in the original differential equation.

Several points of observation are worth observing. We see that in the time-invariant case the transition matrix is found by summing an infinite series. Since the series is always uniformly convergent one can use the series summation as a method for finding the transition matrix on a digital computer. Such a method involves only summation and matrix multiplication and the error after a finite number of terms are considered is relatively easily determined [3]. Alternate methods result from noting that $\exp \underset{\sim}{A}t$ is the inverse Laplace transform of $(p\underset{\sim}{1}_k - \underset{\sim}{A})^{-1}$ as Eq. (VI-11b) shows. Consequently, all entries in $\exp \underset{\sim}{A}t$ are exponentials or time multiplied exponentials; these can be determined from a partial fraction expansion of $(p\underset{\sim}{1}_k - \underset{\sim}{A})^{-1}$ where in fact iterative methods can be used to replace evaluation of this inverse by simple matrix multiplications [4] [5]. If also $\underset{\sim}{f}$ has a rational Laplace transform the final $\underset{\sim}{z}(t)$ for Eq. (VI-15) can be relatively simply found by inversion of Laplace transforms. Alternatively the needed convolution can be carried out directly, though less conveniently, on the computer.

F. Discussion

In terms of the realization matrices several types of sensitivity have been discussed and evaluated, all for scalar transfer functions of time-invariant networks. Both transfer function and pole position sensitivity are relatively easily evaluated while time domain variations require a solution of the canonical equations to find the transition matrix $\exp \underset{\sim}{A}t$.

Actually to determine the variations in the output $y(t)$ due to x parameter changes, $\partial y/\partial x$, requires two solutions of the equations $\underset{\sim}{z} = \underset{\sim}{A}\underset{\sim}{z} + \underset{\sim}{f}$, first with $\underset{\sim}{f} = \underset{\sim}{B}u$, with $\underset{\sim}{z}(t_o) = \underset{\sim}{s}(t_o)$, and then with $\underset{\sim}{f} = (\partial \underset{\sim}{A}/\partial x)\underset{\sim}{s} + (\partial \underset{\sim}{B}/\partial x)u$ subject to $\partial \underset{\sim}{s}(t_o)/\partial x = \underset{\sim}{z}(t_o)$, this latter often being taken as zero. Typical results in the somewhat unrealistic situations where $x = a_{11}$ are plotted in [2, p. 341].

Because changes in responses due to circuit element variations can be disturbing it is often desirable to try to find circuitry which minimizes such variations. One can see from the formula $T(p) = D +$

$\underset{\sim}{C}(p\underset{\sim}{1}_k-\underset{\sim}{A})^{-1}\underset{\sim}{B}$ that if the entire transfer function is obtained by a single realization then the feedback supplied by the configuration will generally mean that each circuit element can possibly strongly interact with all other components resulting in relatively high sensitivity. On the other hand if the transfer function is broken into degree one or two factors as $T(p) = \prod_i [d_i + \frac{c_i b_i}{p+a_i}] \prod_j [D_j + \underset{\sim}{C}_j(p\underset{\sim}{1}_2-\underset{\sim}{A}_j)^{-1}\underset{\sim}{B}_j]$ then those circuit elements occurring in a given portion only relatively strongly interact with those components associated with the appropriate degree one or two realization. Consequently there is practical value in designs based upon the factorization of transfer functions into small degree sub-portions.

Finally we mention that, as with most other state-variable techniques, the theory of sensitivity is made practical for the use of digital computers through the techniques discussed.

G. References

1. Newcomb, R. W., "Concepts of Linear Systems and Controls," Brooks/Cole, Belmont (Calif.), 1968.
2. Kerlin, T. W., "Sensitivities by the State Variable Approach," Simulation, Vol. 8, No. 6, June 1967, pp. 337-345.
3. Liou, M. L., "A Novel Method of Evaluating Transient Response," Proceedings of the IEEE, Vol. 54, No. 1, January 1966, pp. 20-23.
4. Liou, M. L., "Evaluation of the Transition Matrix," Proceedings of the IEEE, Vol. 55, No. 2, February 1967, pp. 228-229.
5. Thomson, W. E., "Evaluation of Transient Response," Proceedings of the IEEE, Vol. 54, No. 11, November 1966, p. 1584.

H. Exercises

1. Exhibit a formula for $\partial y/\partial x$ in terms of the realization matrices and the initial state and input.
2. Show [4] that

$$(p\underset{\sim}{1}_k-\underset{\sim}{A})^{-1} = \sum_{i=0}^{k-1} \frac{p^{k-i-1}}{d(p)}\underset{\sim}{B}_i$$

where

$$d(p) = p^k + d_1 p^{k-1} + \ldots + d_{k-1} p + d_k$$

and

$$\underset{\sim}{B}_o = \underset{\sim}{1}_k, \qquad \underset{\sim}{B}_1 = \underset{\sim}{B}_o \underset{\sim}{A} + d_1 \underset{\sim}{1}_k \quad \ldots$$

$$\underset{\sim}{B}_{k-1} = \underset{\sim}{B}_{k-2} \underset{\sim}{A} + d_{k-1} \underset{\sim}{1}_k, \qquad \underset{\sim}{0} = \underset{\sim}{B}_{k-1} \underset{\sim}{A} + d_k \underset{\sim}{1}_k$$

3. Find the sensitivity of the Brune section, Fig. I-5, to variations in the two gyrators. From this determine which gyrator should be most stably constructed.
4. Discuss the actual programming involved in setting up Eq. (VI-15). Give a flow chart for a program to determine $\partial y/\partial x$ on a digital computer.

Il se peut qu'il n'y ait aucune arrière - pensée entre deux hommes, mais il y a des choses plus impérieuses et plus profondes que la pensée. J'ai été plusieurs fois témoin de ces choses, et un jour je les ai vues de si près que je ne savais plus s'il s'agissait d'un autre ou de moi-même ...

M. Maeterlinck
"Les Avertis" du "Tresor des Humbles"

CHAPTER VII

POSITIVE-REAL ADMITTANCE SYNTHESIS

A. Summary

The results of the Positive-Real Lemma, whose proof is merely outlined, are applied to obtain a transformation which yields a positive-real coupling admittance to load in capacitors such that a passive circuit synthesises a positive-real admittance $\underset{\sim}{Y}(p)$.

B. Introductory Remarks

Previously, Section III D), we saw that if an admittance matrix $\underset{\sim}{Y}(p)$ has a state-variable realization $R = \{\underset{\sim}{A}, \underset{\sim}{B}, \underset{\sim}{C}, \underset{\sim}{D}\}$ then a physical structure yielding $\underset{\sim}{Y}(p)$ as the input n-port admittance results from loading a resistive coupling (n+k)-port structure described by the admittance

$$\underset{\sim}{Y}_c = \begin{bmatrix} \underset{\sim}{D} & -\underset{\sim}{C} \\ \underset{\sim}{B} & -\underset{\sim}{A} \end{bmatrix} \qquad \text{(III-7)}$$

in k unit capacitors. Here $\underset{\sim}{Y}(p)$ is an $n \times n$ matrix while k is the size of the state; conveniently k is taken as the minimal value δ, this being the degree of $\underset{\sim}{Y}(p)$. The structure is as in Fig. VII-1 which is Fig. III-7 repeated for convenience.

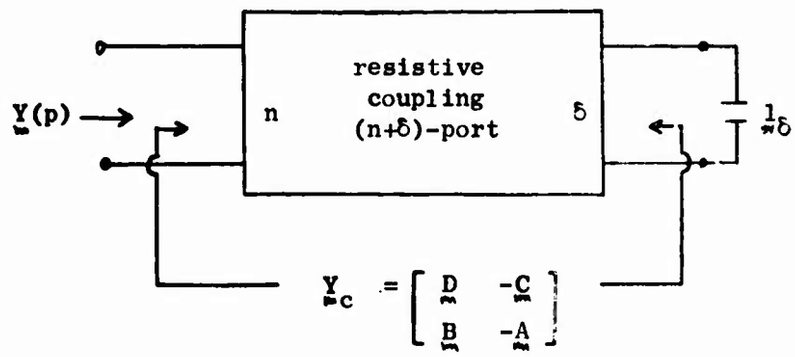

Realization Structure

$\delta = \delta[\underset{\sim}{Y}(p)]$ for Minimal

Figure VII-1

However, even when $\underset{\sim}{Y}(p)$ can be obtained through the use of only passive circuit elements, this method may require other than passive elements since $\underset{\sim}{Y}_c$ may not be obtainable without the use of active elements. Consequently we recall that all minimal equivalents can be obtained by transformations performed upon $\underset{\sim}{Y}_c$; thus all minimal capacitor structures result by allowing $\underset{\sim}{T}$ to vary in

$$\hat{\underset{\sim}{Y}}_c = \begin{bmatrix} \underset{\sim}{D} & -\underset{\sim}{C}\underset{\sim}{T} \\ \underset{\sim}{T}^{-1}\underset{\sim}{B} & -\underset{\sim}{T}^{-1}\underset{\sim}{A}\underset{\sim}{T} \end{bmatrix} \qquad \text{(VII-1)}$$

Our interest here is to search for a proper choice of the transformation $\underset{\sim}{T}$ such that the new coupling admittance matrix $\hat{\underset{\sim}{Y}}_c$ can be realized by passive resistors (and gyrators, recall Fig. III-8).

We recall that the condition for a given rational $n \times n$ matrix $\underset{\sim}{Y}(p)$ to be the admittance matrix of a passive n-port constructed of only passive circuit elements is that $\underset{\sim}{Y}(p)$ is positive-real [1, p. 240]. By definition a matrix $\underset{\sim}{Y}(p)$ is positive-real if

a) $\underset{\sim}{Y}(p)$ is holomorphic in $\text{Re } p > 0$

b) $\underset{\sim}{Y}(p^*) = \underset{\sim}{Y}^*(p)$ in $\text{Re } p > 0$

c) The Hermitian part $\underset{\sim}{Y}_H(p)$, $2\underset{\sim}{Y}_H(p) = \underset{\sim}{Y}(p) + \tilde{\underset{\sim}{Y}}^*(p)$, is nonnegative definite in $\text{Re } p > 0$,

where the superscript asterisk denotes complex conjugation. If $\underset{\sim}{Y}(p)$ is positive-real and rational we will call it PR for convenience.

Since it is known that any rational positive-real matrix has a passive synthesis in the form of Fig. VII-1, it is then a matter of searching for a suitable transformation $\underset{\sim}{T}$ to make $\hat{\underset{\sim}{Y}}_c$ positive-real when $\underset{\sim}{Y}(p)$ is. The purpose of the next sections is to obtain the desired $\underset{\sim}{T}$.

C. The PR Lemma

First we recall that any PR matrix $\underset{\sim}{Y}(p)$ can be decomposed into the sum of two matrices

$$\underset{\sim}{Y}(p) = \underset{\sim}{Y}_L(p) + \underset{\sim}{Y}_o(p) \qquad \text{(VII-2)}$$

where $\underset{\sim}{Y}_L$, the lossless part has all its poles on the $j\omega$ axis [and satisfies $\underset{\sim}{Y}_L(p) = -\tilde{\underset{\sim}{Y}}_L(-p)$] while $\underset{\sim}{Y}_o(p)$ has poles only in the open left half plane; both $\underset{\sim}{Y}_L$ and $\underset{\sim}{Y}_o$ are PR while the decomposition can be obtained through a partial fraction expansion. Since the poles of $\underset{\sim}{Y}_L$ and $\underset{\sim}{Y}_o$ can not coincide, a minimal realization for $\underset{\sim}{Y}_L$ can be "added" to a minimal realization for $\underset{\sim}{Y}_o$ to obtain one for $\underset{\sim}{Y}$. As a consequence we will first obtain properties of these separate realizations and then show how to combine them to give the proper meaning to the word "added." For convenience we assume $\underset{\sim}{Y}(\infty) = \underset{\sim}{Y}_o(\infty)$.

The basic result in the theory is as follows [2].

<u>The PR Lemma</u>: Let $\underset{\sim}{Y}(p)$ be an $n \times n$ rational matrix with real coefficients and with no poles in $\text{Re } p \geq 0$, and let $R = \{\underset{\sim}{A}, \underset{\sim}{B}, \underset{\sim}{C}, \underset{\sim}{D}\}$ be a minimal realization. Then $\underset{\sim}{Y}(p)$ is PR if and only if there exist matrices $\underset{\sim}{W}_\infty$, $\underset{\sim}{L}$, and a (unique) positive definite (symmetric) $\underset{\sim}{P}$ satisfying

$$\underset{\sim}{P}\underset{\sim}{A} + \tilde{\underset{\sim}{A}}\underset{\sim}{P} = -\tilde{\underset{\sim}{L}}\underset{\sim}{L} \qquad \text{(VII-3a)}$$

$$\underset{\sim}{P}\underset{\sim}{B} = \tilde{\underset{\sim}{C}} - \tilde{\underset{\sim}{L}}\underset{\sim}{W}_\infty \qquad \text{(VII-3b)}$$

$$\tilde{W}_{\infty}W_{\infty} = \tilde{D} + D \qquad \text{(VII-3c)}$$

Outline of Demonstration: As the steps in the proof are detailed and involved [2] we merely outline the main ideas with emphasis upon those points of interest for actual calculations.

To see that if Eqs. (VII-3) hold then $Y(p)$ is PR is straightforward from the following calculations, since $Y(p)$ is assumed holomorphic in $\mathrm{Re}\, p \geq 0$ and has real coefficients.

$$\begin{aligned}
2Y_H(p) &= \tilde{Y}(p^*) + Y(p) = D+\tilde{D} + \tilde{B}(p^*1_\xi-\tilde{A})^{-1}\tilde{C} + C(p1_\xi-A)^{-1}B \\
&= \tilde{W}_\infty W_\infty + \tilde{B}[(p^*1_\xi-\tilde{A})^{-1}\tilde{P} + \tilde{P}(p1_\xi-A)^{-1}]B \\
&\quad + \tilde{B}(p^*1_\xi-\tilde{A})^{-1}\tilde{L}W_\infty + \tilde{W}_\infty L(p1_\xi-A)^{-1}B \\
&= \tilde{W}_\infty W_\infty + \tilde{B}(p^*1_\xi-\tilde{A})^{-1}[P(p+p^*)+\tilde{L}L](p1_\xi-A)^{-1}B \\
&\quad + \tilde{B}(p^*1_\xi-\tilde{A})^{-1}\tilde{L}W_\infty + \tilde{W}_\infty L(p1_\xi-A)^{-1}B \\
&= [W_\infty+\tilde{B}(p^*1_\xi-A)^{-1}\tilde{L}][W_\infty+L(p1_\xi-A)^{-1}B] \\
&\quad + \tilde{B}(p^*1_\xi-\tilde{A})^{-1}[(p+p^*)P](p1_\xi-A)^{-1}B \qquad \text{(VII-4)}
\end{aligned}$$

This last shows that $Y_H(p)$ is positive semidefinite for all p with $p+p^* \geq 0$, that is in the right half plane, since P can also be factored into $P = P^{1/2}P^{1/2}$ with the square roots also symmetric.

To show that $Y(p)$ is PR only if Eqs. (VII-3) hold is more difficult. We first find a $W(p)$ satisfying

$$Y(p) + \tilde{Y}(-p) = \tilde{W}(-p)W(p) \qquad \text{(VII-5a)}$$

where further $W(p)$ is holomorphic, together with its right inverse W_r^{-1}, in the right half plane. Such $W(p)$ can be found conveniently, but the calculations can become involved [5]. The use of this particular $W(p)$ is used to guarantee the minimality of $W(p)$, often simpler factorizations as the one of Gauss [1, p. 108] can be made to advantage.

NOT REPRODUCIBLE

One can then show that $\underset{\sim}{W}(p)$ has the minimal realization $R = \{\underset{\sim}{A}, \underset{\sim}{B}, \underset{\sim}{L}, \underset{\sim}{W}_\infty\}$ which serves to define $\underset{\sim}{L}$; note that the matrices $\underset{\sim}{A}$ and $\underset{\sim}{B}$ are identical for $\underset{\sim}{Y}(p)$ and $\underset{\sim}{W}(p)$. We then transform the minimal realization

$$R_1 = \left\{ \begin{bmatrix} \underset{\sim}{A} & \underset{\sim}{0} \\ \underset{\sim}{\tilde{L}}\underset{\sim}{L} & -\underset{\sim}{\tilde{A}} \end{bmatrix}, \begin{bmatrix} \underset{\sim}{B} \\ \underset{\sim}{\tilde{L}}\underset{\sim}{W}_\infty \end{bmatrix}, [\underset{\sim}{\tilde{W}}_\infty \underset{\sim}{L}, -\underset{\sim}{\tilde{B}}], \underset{\sim}{\tilde{W}}_\infty \underset{\sim}{W}_\infty \right\} \qquad \text{(VII-5b)}$$

of $\underset{\sim}{\tilde{W}}(-p)\underset{\sim}{W}(p)$ through Eq. (V-2a) using

$$\underset{\sim}{T} = \begin{bmatrix} \underset{\sim}{1}_\delta & \underset{\sim}{0} \\ -\underset{\sim}{P} & \underset{\sim}{1}_\delta \end{bmatrix} \qquad \text{(VII-5c)}$$

to get the equivalent realization for $\underset{\sim}{\tilde{W}}(-p)\underset{\sim}{W}(p)$

$$R_2 = \left\{ \begin{bmatrix} \underset{\sim}{A} & \underset{\sim}{0} \\ \underset{\sim}{0} & -\underset{\sim}{\tilde{A}} \end{bmatrix}, \begin{bmatrix} \underset{\sim}{B} \\ \underset{\sim}{P}\underset{\sim}{B} + \underset{\sim}{\tilde{L}}\underset{\sim}{W}_\infty \end{bmatrix}, [\underset{\sim}{\tilde{W}}_\infty \underset{\sim}{L} + \underset{\sim}{\tilde{B}}\underset{\sim}{P}, -\underset{\sim}{\tilde{B}}], \underset{\sim}{\tilde{W}}_\infty \underset{\sim}{W}_\infty \right\} \qquad \text{(VII-5d)}$$

Here $\underset{\sim}{P}$ is the unique positive definite solution of the equation

$$\underset{\sim}{P}\underset{\sim}{A} + \underset{\sim}{\tilde{A}}\underset{\sim}{P} = -\underset{\sim}{\tilde{L}}\underset{\sim}{L} \qquad \text{(VII-3a)}$$

Next we note that a realization for $\underset{\sim}{Y}(p)+\underset{\sim}{Y}(-p)$ is

$$R_3 = \left\{ \begin{bmatrix} \underset{\sim}{A} & \underset{\sim}{0} \\ \underset{\sim}{0} & -\underset{\sim}{\tilde{A}} \end{bmatrix}, \begin{bmatrix} \underset{\sim}{B} \\ \underset{\sim}{\tilde{C}} \end{bmatrix}, [\underset{\sim}{C}, -\underset{\sim}{\tilde{B}}], \underset{\sim}{\tilde{D}} + \underset{\sim}{D} \right\} \qquad \text{(VII-5e)}$$

On noting the conditions for equivalence and identification of realizations we obtain $R_2 = R_3$ and the PR Lemma follows. Q.E.D.

On noting that almost all of the previous holds except that $\underset{\sim}{W} = \underset{\sim}{0}$, and hence $\underset{\sim}{L} = \underset{\sim}{0}$, when $\underset{\sim}{Y}$ is lossless and zero at infinity, we conclude that in the lossless case there exists a positive definite (symmetric) $\underset{\sim}{P}_I$ such that

$$\underset{\sim}{P}_L \underset{\sim}{A}_L + \tilde{\underset{\sim}{A}}_L \underset{\sim}{P}_L = \underset{\sim}{0} \qquad \text{(VII-6a)}$$

$$\underset{\sim}{P}_L \underset{\sim}{B}_L = \tilde{\underset{\sim}{C}}_L \qquad \text{(VII-6b)}$$

where $\{\underset{\sim}{A}_L, \underset{\sim}{B}_L, \underset{\sim}{C}_L, \underset{\sim}{0}\}$ is a minimal realization of the lossless PR admittance which is zero at infinity. As a consequence we can replace the conditions of the PR Lemma to allow simple poles on the $j\omega$ axis, none though at infinity, if we use

$$\underset{\sim}{P} = \underset{\sim}{P}_L \dotplus \underset{\sim}{P}_o, \qquad \underset{\sim}{A} = \underset{\sim}{A}_L \dotplus \underset{\sim}{A}_o$$

$$\underset{\sim}{B} = \begin{bmatrix} \underset{\sim}{B}_L \\ \underset{\sim}{B}_o \end{bmatrix}, \qquad \underset{\sim}{C} = [\underset{\sim}{C}_L, \underset{\sim}{C}_o], \qquad \underset{\sim}{L} = \begin{bmatrix} \underset{\sim}{0} \\ \underset{\sim}{L}_o \end{bmatrix} \qquad \text{(VII-7)}$$

where the subscript zeros refer to the realization of $\underset{\sim}{Y}_o$, that portion of $\underset{\sim}{Y}(p)$ with only open left half plane poles. Note, however, that now $\underset{\sim}{P}$ is no longer unique by virtue of the presence of $\underset{\sim}{P}_L$.

In conclusion, if $\underset{\sim}{Y}(p)$ is PR with no pole at infinity then Eqs. (VII-3) hold with the various matrices obtained using Eq. (VII-7) upon decomposing $\underset{\sim}{Y}(p)$ into the sum of a lossless part $\underset{\sim}{Y}_L(p)$ and a nonlossless part $\underset{\sim}{Y}_o(p)$. The calculations are theoretically very straightforward but the computation for $\underset{\sim}{W}(p)$ with the proper holomorphic inverse gives considerable difficulty in practice. However once such a $\underset{\sim}{W}(p)$ is found Eqs. (VII-3a) can be solved for $\underset{\sim}{P}_o$ in a very straightforward manner as a set of linear algebraic equations subject to the positive definite constraints. As it stands the method does not allow the direct treatment of poles at infinity and these must therefore be extracted separately as an added term $p\underset{\sim}{C}_\infty$, for the right side of Eq. (VII-2), to be independently considered for synthesis purposes.

D. PR Admittance Synthesis

We assume as given an $n \times n$ PR admittance matrix which we can, as a consequence, decompose into

$$\underset{\sim}{Y}(p) = \underset{\sim}{Y}_o(p) + \underset{\sim}{Y}_L(p) + p\underset{\sim}{C}_\infty \qquad \text{(VII-8)}$$

where $\underset{\sim}{Y}_o(p)$ is holomorphic in $\text{Re } p \geq 0$, all the poles of $\underset{\sim}{Y}_L(p)$ are on the $j\omega$ axis and simple with none at infinity, and all three terms on the right of Eq. (VI-8) are separately PR. The term $p\underset{\sim}{C}_\infty$ is separately synthesized, using for example only capacitors loading transformers [1, p. 204]; the resulting network for $p\underset{\sim}{C}_\infty$ is connected in parallel with one of $\underset{\sim}{Y}_o + \underset{\sim}{Y}_L$.

To synthesize $\underset{\sim}{Y}_o + \underset{\sim}{Y}_L$ we find any minimal realization $R = \{[\underset{\sim}{A}_L \dot{+} \underset{\sim}{A}_o], \begin{bmatrix} \underset{\sim}{B}_L \\ \underset{\sim}{B}_o \end{bmatrix}, [\underset{\sim}{C}_L, \underset{\sim}{C}_o], \underset{\sim}{D}\}$ and then determine a desired $\underset{\sim}{P} = \underset{\sim}{P}_L \dot{+} \underset{\sim}{P}_o$ as for Eq. (VII-7). Since $\underset{\sim}{P}$ is positive definite we find its (unique) positive definite square root $\underset{\sim}{P}^{1/2}$. Thus

$$\underset{\sim}{P} = \underset{\sim}{P}^{1/2}\underset{\sim}{P}^{1/2} \qquad \text{(VII-9a)}$$

In actual fact, since $\underset{\sim}{P}$ is in direct sum form we can also write $\underset{\sim}{P}^{1/2}$ in direct sum form as

$$\underset{\sim}{P}^{1/2} = \underset{\sim}{P}_L^{1/2} \dot{+} \underset{\sim}{P}_o^{1/2} \qquad \text{(VII-9b)}$$

Next we apply the theory of equivalence of Chapter V, choosing

$$\underset{\sim}{T} = \underset{\sim}{P}^{-1/2} \qquad \text{(VII-9c)}$$

where $\underset{\sim}{P}^{-1/2}$ is the inverse of $\underset{\sim}{P}^{1/2}$ [note that the $\underset{\sim}{P}$ of Eq. (V-2b) has a different meaning than the $\underset{\sim}{P}$ of Eq. (VII-9c) whereas the $\underset{\sim}{T}$'s are the same]. We then have a realization $\hat{R} = \{\underset{\sim}{P}^{1/2}\underset{\sim}{A}\underset{\sim}{P}^{-1/2}, \underset{\sim}{P}^{1/2}\underset{\sim}{B}, \underset{\sim}{C}\underset{\sim}{P}^{-1/2}, \underset{\sim}{D}\}$ derived from the original R having its entries as given by Eqs. (VII-7). As a consequence, by our introductory comments and Eq. (VII-1) we can form

$$\hat{\underset{\sim}{Y}}_c = \begin{bmatrix} \underset{\sim}{D} & -\underset{\sim}{C}\underset{\sim}{P}^{1/2} \\ \underset{\sim}{P}^{1/2}\underset{\sim}{B} & -\underset{\sim}{P}^{1/2}\underset{\sim}{A}\underset{\sim}{P}^{-1/2} \end{bmatrix} \qquad \text{(VII-10a)}$$

$$= \begin{bmatrix} \underset{\sim}{Y}_L(\infty) + \underset{\sim}{Y}_o(\infty) & -[\underset{\sim}{C}_L \underset{\sim}{C}_o](\underset{\sim}{P}_L^{-1/2} \dot{+} \underset{\sim}{P}_o^{-1/2}) \\ (\underset{\sim}{P}_L^{1/2} \dot{+} \underset{\sim}{P}_o^{1/2}) \begin{bmatrix} \underset{\sim}{B}_L \\ \underset{\sim}{B}_o \end{bmatrix} & -(\underset{\sim}{P}_L^{1/2} \dot{+} \underset{\sim}{P}_o^{1/2})[\underset{\sim}{A}_L \dot{+} \underset{\sim}{A}_o](\underset{\sim}{P}_L^{-1/2} \dot{+} \underset{\sim}{P}_o^{-1/2}) \end{bmatrix} \quad \text{(VII-10b)}$$

By our previous reasoning $\underset{\sim}{Y}(p) - p\underset{\sim}{C}_\infty$ results from loading the resistive coupling network having the admittance matrix $\hat{\underset{\sim}{Y}}_c$ in δ unit capacitors, where δ is the degree of $\underset{\sim}{Y}(p) - p\underset{\sim}{C}_\infty$. Our claim is now that $\hat{\underset{\sim}{Y}}_c$ is PR if $\underset{\sim}{Y}(p)$ is, such that a circuit structure from $\hat{\underset{\sim}{Y}}_c$ need use only gyrators and positive resistors. That is, the choice $\underset{\sim}{T} = \underset{\sim}{P}^{-1/2}$ has allowed a completely passive synthesis of a PR admittance matrix.

To see that $\hat{\underset{\sim}{Y}}_c$ is PR we merely need to check to see if it has a positive semidefinite Hermitian part. Thus we form

$$\hat{\underset{\sim}{Y}}_c + \tilde{\hat{\underset{\sim}{Y}}}_c = \begin{bmatrix} \underset{\sim}{D} + \tilde{\underset{\sim}{D}} & -\underset{\sim}{C}\underset{\sim}{P}^{-1/2} + \tilde{\underset{\sim}{B}}\tilde{\underset{\sim}{P}}^{1/2} \\ \underset{\sim}{P}^{1/2}\underset{\sim}{B} - \tilde{\underset{\sim}{P}}^{-1/2}\tilde{\underset{\sim}{C}} & -\underset{\sim}{P}^{1/2}\underset{\sim}{A}\underset{\sim}{P}^{-1/2} - \tilde{\underset{\sim}{P}}^{-1/2}\tilde{\underset{\sim}{A}}\tilde{\underset{\sim}{P}}^{1/2} \end{bmatrix} \quad \text{(VII-11a)}$$

$$= (\underset{\sim}{1}_n \dot{+} \underset{\sim}{P}^{-1/2}) \begin{bmatrix} \tilde{\underset{\sim}{W}}_\infty \underset{\sim}{W}_\infty & -\underset{\sim}{C} + \tilde{\underset{\sim}{B}}\underset{\sim}{P} \\ \underset{\sim}{P}\underset{\sim}{B} - \tilde{\underset{\sim}{C}} & -\underset{\sim}{P}\underset{\sim}{A} - \tilde{\underset{\sim}{A}}\underset{\sim}{P} \end{bmatrix} (\underset{\sim}{1}_n \dot{+} \underset{\sim}{P}^{-1/2}) \quad \text{(VII-11b)}$$

$$= (\underset{\sim}{1}_n \dot{+} \underset{\sim}{P}_L^{-1/2} \dot{+} \underset{\sim}{P}_o^{-1/2}) \begin{bmatrix} \tilde{\underset{\sim}{W}}_\infty \underset{\sim}{W}_\infty & \underset{\sim}{0} & -\tilde{\underset{\sim}{W}}_\infty \underset{\sim}{L}_o \\ \underset{\sim}{0} & \underset{\sim}{0} & \underset{\sim}{0} \\ -\tilde{\underset{\sim}{L}}_o \underset{\sim}{W}_\infty & \underset{\sim}{0} & \tilde{\underset{\sim}{L}}_o \underset{\sim}{L}_o \end{bmatrix} (\underset{\sim}{1}_n \dot{+} \underset{\sim}{P}_L^{-1/2} \dot{+} \underset{\sim}{P}_o^{-1/2} \quad \text{(VII-11c)}$$

where we have used the fact that $\underset{\sim}{P}^{1/2}$ is symmetric, $\tilde{\underset{\sim}{P}}^{1/2} = \underset{\sim}{P}^{1/2}$, as well as Eqs. (VII-3) in their extended form valid for the inclusion of lossless parts, Eq. (VII-7). That is, $\underset{\sim}{W}_\infty$ is that $\underset{\sim}{W}(\infty)$ which corresponds to $\underset{\sim}{Y}_o(p)$ while $\tilde{\underset{\sim}{L}} = [\underset{\sim}{0}, \tilde{\underset{\sim}{L}}_o]$. If $\underset{\sim}{W}_\infty$ has rank r, that is if r is the rank of $\underset{\sim}{Y}_o(p) + \tilde{\underset{\sim}{Y}}_o(p)$, then we can rewrite Eq. (VII-11c) as

$$\hat{\underset{\sim}{Y}}_c + \tilde{\hat{\underset{\sim}{Y}}}_c = \begin{bmatrix} \tilde{\underset{\sim}{W}}_\infty \\ \underset{\sim}{0} \\ -\tilde{\underset{\sim}{P}}_o^{-1/2}\tilde{\underset{\sim}{L}}_o \end{bmatrix} \underset{\sim}{1}_r [\underset{\sim}{W}_\infty, \underset{\sim}{0}, -\underset{\sim}{L}_o \underset{\sim}{P}_o^{-1/2}] \quad \text{(VII-11d)}$$

As shown by Section III D), $\underset{\sim}{Y}_c$ can now be synthesized by gyrators and r positive resistors. For instance Fig. III-8 applies to synthesize the symmetric part, which is one-half of Eq. (VII-11d), with r unit resistors and a gyrator coupling network described by the gyrator conductance matrix

$$\underset{\sim}{G} = \frac{1}{\sqrt{2}}\begin{bmatrix} \underset{\sim}{\tilde{W}}_\infty \\ \underset{\sim}{0} \\ -\underset{\sim}{P}_o^{-1/2}\underset{\sim}{L}_o \end{bmatrix} \qquad \text{(VII-11e)}$$

We comment that zeros in $\underset{\sim}{G}$ which designate rows and columns of zeros in the symmetric part of $\underset{\sim}{\hat{Y}}_c$ are as expected since they are associated with the lossless part $\underset{\sim}{Y}_L(p)$ for which no resistors are necessary. In fact since

$$r = \text{rank}[\underset{\sim}{Y}(p)+\underset{\sim}{\tilde{Y}}(-p)] \qquad \text{(VII-11f)}$$

and since this rank corresponds to the minimum number of resistors possible in a synthesis, we see that besides using a minimum number of capacitors this method uses the minimum number of resistors. In fact in the case where the original $\underset{\sim}{Y}(p)$ is lossless, $\underset{\sim}{G}$ of Eq. (VII-11e) reduces completely to zero. Of course the vanishing of the $\underset{\sim}{P}_L$ portions of Eq. (VII-11d) does not mean that $\underset{\sim}{P}_L$ never enters into consideration; for example $\underset{\sim}{P}_L$ occurs in the skew-symmetric portion which acts through gyrators to couple the capacitors to the input ports in a lossless manner.

E. Example

Let us apply the method to the PR scalar

$$y(p) = \frac{4p^3 + 2p^2 + 18p}{p^3 + 2p^2 + 4p + 8} \qquad \text{(VII-12a)}$$

$$= \frac{2p}{p^2 + 4} + \frac{4p}{p + 2} \qquad \text{(VII-12b)}$$

The latter split gives the decomposition into lossless and nonlossless parts; thus $y_L(p) = 2p/(p^2+4)$, $y_o(p) = 4p/(p+2)$.

For y_L and y_o appropriate realizations R_L and R_o are obtained from Eq. (IV-3) as

$$R_L = \left\{ \begin{bmatrix} 0 & 1 \\ -4 & 0 \end{bmatrix}, \begin{bmatrix} 2 \\ 0 \end{bmatrix}, [1, 0], [0] \right\} \qquad \text{(VII-12c)}$$

$$R_o = \{[-2], [-8], [1], [4]\} \qquad \text{(VII-12d)}$$

For y_o we have

$$y_o(p) + y_o(-p) = \frac{-8p^2}{-p^2 + 4} = \left(\frac{-2\sqrt{2}p}{-p+2}\right)\left(\frac{2\sqrt{2}p}{p+2}\right) \qquad \text{(VII-12e)}$$

We observe that $W(p)$ is unique to within a minus sign; we choose

$$W(p) = \frac{2\sqrt{2}p}{p+2} \qquad \text{(VII-12f)}$$

for which a realization following Eq. (IV-3) is $\{[-2], [-4\sqrt{2}], [1], [2\sqrt{2}]\}$. We thus desire to choose a transformation $T = 1/\sqrt{2}$ to bring this B of $-4\sqrt{2}$ to $T^{-1}B = -8$. Thus we have as the appropriate realization R_W for W

$$R_W = \{[-2], [-8], [1/\sqrt{2}], [2\sqrt{2}]\} \qquad \text{(VII-12g)}$$

We have at this point $L_o = 1/\sqrt{2}$ and $W_\infty = 2\sqrt{2}$. The transformation P_o is found from

$$P_o A_o + A_o P_o = -4P_o = -L_o L_o = -1/2 \qquad \text{(VII-12h)}$$

or

$$P_o = 1/8, \qquad P_o^{1/2} = 1/2\sqrt{2} \qquad \text{(VII-12i)}$$

To find Γ_L we observe that $y_L(p) + y_L(-p) = 0$ in which case $\underset{\sim}{L}_L = \underset{\sim}{0}$ and we simply solve for a positive definite $\underset{\sim}{P}_L$ satisfying $\underset{\sim}{P}_L\underset{\sim}{A}_L + \tilde{\underset{\sim}{A}}_L\underset{\sim}{P}_L = \underset{\sim}{0}_2$, that is

$$\begin{bmatrix} p_{11} & p_{12} \\ p_{12} & p_{22} \end{bmatrix}\begin{bmatrix} 0 & 1 \\ -4 & 0 \end{bmatrix} + \begin{bmatrix} 0 & -4 \\ 1 & 0 \end{bmatrix}\begin{bmatrix} p_{11} & p_{12} \\ p_{12} & p_{22} \end{bmatrix} = \begin{bmatrix} 0 & 0 \\ 0 & 0 \end{bmatrix} \qquad \text{(VII-12j)}$$

The (1,1) and (2,2) entries require $p_{12} = 0$ while the (1,2) entry gives $p_{11} = 4p_{22}$ as does the (2,1) term. Positive definiteness merely requires $p_{22} > 0$ while $\underset{\sim}{P}_L\underset{\sim}{B}_L = \tilde{\underset{\sim}{C}}_L$ requires $8p_{22} = 1$. Thus

$$\underset{\sim}{P}_L = \begin{bmatrix} 1/2 & 0 \\ 0 & 1/8 \end{bmatrix}, \quad \underset{\sim}{P}_L^{1/2} = \begin{bmatrix} 1/\sqrt{2} & 0 \\ 0 & 1/2\sqrt{2} \end{bmatrix} \qquad \text{(VII-12k)}$$

Now the original coupling admittance, before the application of $\underset{\sim}{P}^{1/2}$ is

$$\underset{\sim}{Y}_c = \left[\begin{array}{c|cc|c} 4 & -1 & 0 & -1 \\ \hline 2 & 0 & -1 & 0 \\ 0 & 4 & 0 & 0 \\ \hline -8 & 0 & 0 & 2 \end{array}\right] \qquad \text{(VII-12l)}$$

which is not PR as can be seen by the principal middle submatrix $\underset{\sim}{A}_L$. We then form

$$\hat{\underset{\sim}{Y}}_c = [1 \dot{+} \underset{\sim}{P}^{1/2}]\underset{\sim}{Y}_c[1 \dot{+} \underset{\sim}{P}^{-1/2}] \qquad \text{(VII-12m)}$$

where $\underset{\sim}{P}^{1/2} = \underset{\sim}{P}_L^{1/2} \dot{+} P_o$ or

$$\hat{\underset{\sim}{Y}}_c = \begin{bmatrix} 1 & 0 & 0 & 0 \\ 0 & \frac{1}{\sqrt{2}} & 0 & 0 \\ 0 & 0 & \frac{1}{2\sqrt{2}} & 0 \\ 0 & 0 & 0 & \frac{1}{2\sqrt{2}} \end{bmatrix} \begin{bmatrix} 4 & -1 & 0 & -1 \\ 2 & 0 & -1 & 0 \\ 0 & 4 & 0 & 0 \\ -8 & 0 & 0 & 2 \end{bmatrix} \begin{bmatrix} 1 & 0 & 0 & 0 \\ 0 & \sqrt{2} & 0 & 0 \\ 0 & 0 & 2\sqrt{2} & 0 \\ 0 & 0 & 0 & 2\sqrt{2} \end{bmatrix}$$

$$= \begin{bmatrix} 4 & -\sqrt{2} & 0 & -2\sqrt{2} \\ \sqrt{2} & 0 & -2 & 0 \\ 0 & 2 & 0 & 0 \\ -2\sqrt{2} & 0 & 0 & 2 \end{bmatrix}$$

Finally we have for $\hat{\underset{\sim}{Y}}_c = \hat{\underset{\sim}{Y}}_{c\ sy} + \hat{\underset{\sim}{Y}}_{c\ sk}$

$$\hat{\underset{\sim}{Y}}_{c\ sy} = \begin{bmatrix} 4 & 0 & 0 & -2\sqrt{2} \\ 0 & 0 & 0 & 0 \\ 0 & 0 & 0 & 0 \\ -2\sqrt{2} & 0 & 0 & 2 \end{bmatrix} = \begin{bmatrix} 2 \\ 0 \\ 0 \\ -\sqrt{2} \end{bmatrix} [2\ 0\ 0\ -\sqrt{2}]$$

$$\hat{\underset{\sim}{Y}}_{c\ sk} = \begin{bmatrix} 0 & -\sqrt{2} & 0 & 0 \\ \sqrt{2} & 0 & -2 & 0 \\ 0 & 2 & 0 & 0 \\ 0 & 0 & 0 & 0 \end{bmatrix}$$

Note that $\hat{\underset{\sim}{Y}}_{c\ sy}$ takes the form predicted by Eq. (VII-11d). The final circuit diagram is shown in Fig. VII-2.

In the figure we observe that y_L and y_o are separately realized and then connected in parallel. In all situations $\hat{\underset{\sim}{Y}}_{c\ sy}$ will be associated only with $y_o(p)$ but in this case the skew symmetric part has only occurred while synthesizing $y_L(p)$. Note that even though a minimum number of capacitors and resistors have been used an excess number of gyrators occurs. By shifting elements through the gyrators

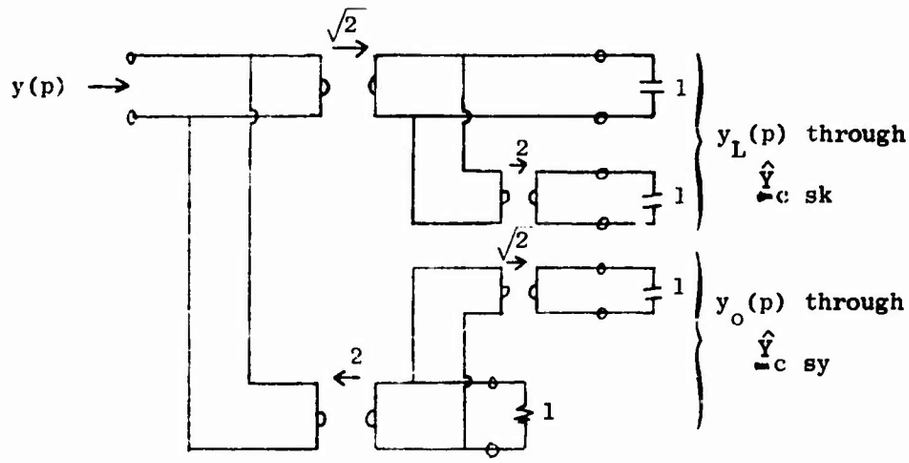

Final Example Configuration

Figure VII-2

we can easily obtain Fig. VII-3a) from Fig. VII-2, or by direct synthesis. Decomposing this latter circuit yields the resistive circuit of Fig. VII-3b), loaded in capacitors. We observe however that this latter configuration possesses no admittance coupling matrix. Our conclusion is that always our synthesis of PR admittances will work but that in some instances more than the minimum number of gyrators will be used, though never more than the minimum number of capacitors and resistors is needed.

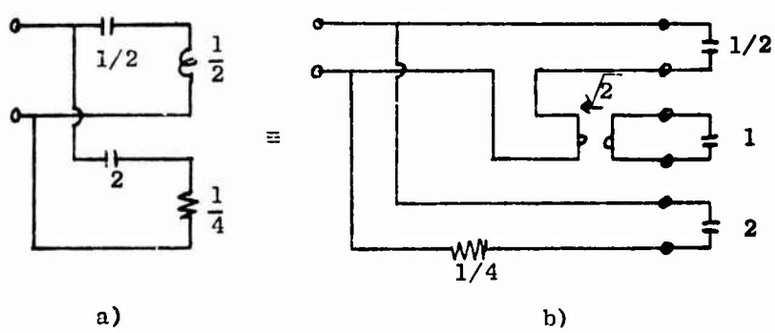

Minimal Gyrator Realization

Figure VII-3

F. Discussion

In this chapter we have presented a method of synthesis of positive-real rational admittance matrices, and by duality impedance matrices. The method is based upon only algebraic operations and thus is readily programmed on a computer. The key point of the theory is the proper application of the PR Lemma to obtain the appropriate transformation. However it is in the application of this Lemma where the greatest difficulty occurs since a rather complicated factorization of the para-Hermitian part of $\underset{\sim}{Y}(p)$ sometimes must be undertaken in order to obtain $\underset{\sim}{W}(p)$. For nonpositive-real matrices or positive-real matrices of infinite dimension similar steps appear to be possible but as yet have not been extensively studied.

The ideas of the method can be applied to a hybrid coupling matrix in such a manner that some promise holds for minimal gyrator synthesis [4]. That is, $\underset{\sim}{Y}_c$ can be interpreted as a hybrid matrix if some ports are loaded in inductors in place of capacitors; in such a case one still desires $\underset{\sim}{Y}_c$ PR when $\underset{\sim}{Y}(p)$ is. Alternately, by using the hybrid interpretation one can give a synthesis in terms of the cut set and tie set matrices previously studied, at least in the lossless (and gyrator-less) case [5]. However, as with the minimal gyrator situation improved conditions are still needed to complete the theory. Nevertheless the nonlinear theory has been interestingly investigated [6].

Because of the situation illustrated in Fig. VII-3, where no coupling admittance matrix exists, it seems important to extend the method to scattering matrices where partial results of the PR Lemma type are available [7]. The work of Youla and Tissi represents a step in this direction [8].

Since it was possible to find one transformation $\underset{\sim}{T}$ taking any minimal realization into a passive one it is of interest to find all such $\underset{\sim}{T}$. As yet little solid theory is available in this direction but the theory of continuous transformation groups seems applicable.

G. References

1. Newcomb, R. W., "Linear Multiport Synthesis," McGraw-Hill, New York, 1966.
2. Anderson, B. D. O., "A System Theory Criterion for Positive Real Matrices," J. SIAM Control, Vol. 5, No. 2, 1967, pp. 171-182.
3. Davis, M. C., "Factoring the Spectral Matrix," IEEE Transactions on Automatic Control, Vol. AC-8, No. 4, October 1963, pp. 296-305.
4. Anderson, B. D. O., and R. W. Newcomb, "Lossless N-Port Synthesis Via State-Space Techniques," Stanford Electronics Laboratories, Technical Report No. 6558-8, April 1967.
5. Yarlagadda, R., and Y. Tokad, "Synthesis of LC Networks -- A State-Model Approach," Proceedings of the IEE, Vol. 113, No. 6, June 1966, pp. 975-981.
6. Ohtsuki, T., and H. Watanabe, "State-Variable Analysis of RLC Networks Containing Nonlinear Coupling Elements," Nippon Electric Co., Research Memorandum, 1967.
7. Anderson, B. D. O., "Algebraic Description of Bounded Real Matrices," Electronics Letters, Vol. 2, No. 12, December 1966, pp. 464-465.
8. Youla, D. C., and P. Tissi, "N-Port Synthesis via Reactance Extraction," 1966 IEEE International Convention Record, Part 7, pp. 183-208.
9. Barnett, S., and C. Storey, "Solution of the Lyapunov Matrix Equation," Electronics Letters, Vol. 2, No. 12, December 1966, pp. 466-467.
10. Anderson, B. D. O., and R. W. Brockett, "A Multiport State-Space Darlington Synthesis," IEEE Transactions on Circuit Theory, Vol. CT-14, No. 3, September 1967.

H. Exercises

1. Synthesize the PR impedance matrix

$$\underset{\sim}{Z}(p) = \frac{1}{p^2+2}\begin{bmatrix} p & 1 \\ 1 & 4p \end{bmatrix} + \frac{1}{p+1}\begin{bmatrix} 1 & -2 \\ -2 & 4 \end{bmatrix}$$

by converting to the admittance matrix and applying the methods of this chapter.

2. Fill in the steps of the PR Lemma proof.

*3. Discuss a positive-real lemma for nonrational matrices and how this might be used for synthesis.

4. Investigate possible methods of determining $\underset{\sim}{W}(p)$, [3], [1, p. 168], and discuss the simplest for machine calculation.

5. Show that the synthesis of the text uses both the minimum number of resistors and capacitors.

*6. For the example of the text:

   a) find all minimal realizations and isolate those for which $\hat{\underset{\sim}{Y}}_c$ is PR.

   b) investigate possible ways of accounting for Fig. VII-3.

   c) find all minimal realizations on a scattering matrix basis.

7. Discuss the various methods of calculating the matrix $\underset{\sim}{P}$ [9].

*8. Investigate methods of synthesizing bounded-real rational matrices by the techniques of the text [7].

*9. Show how the same techniques can be extended to cover nonminimal synthesis of PR matrices and discuss how such may be of importance for minimal gyrator synthesis.

10. Apply the PR Lemma to show how to synthesize through the equations [10]

$$\dot{\underset{\sim}{s}} = \frac{1}{2}(\underset{\sim}{A}-\tilde{\underset{\sim}{A}})\underset{\sim}{s} + \underset{\sim}{B}\underset{\sim}{v} - \frac{1}{\sqrt{2}}\tilde{\underset{\sim}{L}}\underset{\sim}{v}^*$$

$$\underset{\sim}{i} = \tilde{\underset{\sim}{B}}\underset{\sim}{s}$$

$$\underset{\sim}{i}^* = \frac{1}{\sqrt{2}}\underset{\sim}{L}\underset{\sim}{s}$$

subject to $\underset{\sim}{i} = -\underset{\sim}{v}^*$. In particular show that a network realization occurs by terminating the gyrator network

$$\underset{\sim}{Y}_c = \begin{bmatrix} \underset{\sim}{0} & \underset{\sim}{0} & -\tilde{\underset{\sim}{B}} \\ \underset{\sim}{0} & \underset{\sim}{0} & \frac{1}{\sqrt{2}}\underset{\sim}{L} \\ \underset{\sim}{B} & \frac{-\tilde{\underset{\sim}{L}}}{\sqrt{2}} & \frac{1}{2}(\underset{\sim}{A}-\tilde{\underset{\sim}{A}}) \end{bmatrix}$$

in unit resistors and unit capacitors. Show that the minimum number of resistors and capacitors are used.

Ils semblaient par moments nous
regarder du haut d'une tour. Il est
vrai que rien n'est caché; et vous
tous qui me rencontrez, vous savez
ce que j'ai fait et ce que je ferai,
vous savez ce que je pense et ce
que j'ai pensé.

M. Maeterlinck
"Les Avertis" du "Tresor les Humbles"

CHAPTER VIII

LUMPED-DISTRIBUTED LOSSLESS SYNTHESIS

A. Summary

Here we briefly summarize the application of the previously discussed techniques to the synthesis of networks constructed of lossless lumped circuit elements and LC transmission lines. The theory is based upon the use of frequency transformations to obtain lossless but rational 2-variable matrices.

B. Introductory Material

We first review some properties of LC transmission lines as well as a method of treating circuits constructed from lumped circuit elements in conjunction with the LC lines. This will lead us to positive-real and rational 2-variable matrices and their synthesis. As we will see the admittance description, which we adhere to, is not rational in the true frequency variable, and as a consequence we introduce a second frequency variable to obtain rationality.

Let us first consider a lossless transmission line of length ℓ and inductance L and capacitance C per unit length. As shown in Fig. VIII-1 this line can be treated as a 2-port having the admittance matrix [1, p. 66]

$$\underset{\sim}{Y}(p) = y_o \begin{bmatrix} \text{ctnh } \gamma p & -\text{csch } \gamma p \\ -\text{csch } \gamma p & \text{ctanh } \gamma p \end{bmatrix} \qquad \begin{matrix} \gamma = \sqrt{LC}\,\ell \\ \\ y_o = \sqrt{C/L} \end{matrix} \qquad \text{(VIII-1a)}$$

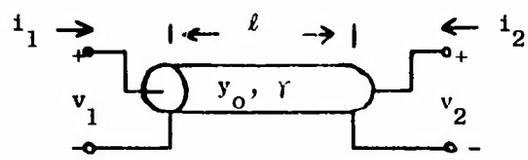

Lossless Transmission Line

Figure VIII-1

We observe that the admittance matrix $\underset{\sim}{Y}(p)$ is not rational in p but that the positive-real frequency transformation

$$\lambda = \text{ctnh}\,(\gamma p/2) \qquad \text{(VIII-1b)}$$

yields a rational positive-real admittance description

$$\textcircled{\underset{\sim}{Y}}(\lambda) = \underset{\sim}{Y}(p) = y_o \begin{bmatrix} \frac{1+\lambda^2}{2\lambda} & \frac{1-\lambda^2}{2\lambda} \\ \frac{1-\lambda^2}{2\lambda} & \frac{1+\lambda^2}{2\lambda} \end{bmatrix} \qquad \text{(VIII-1c)}$$

In fact we observe that any transmission line which has its γ an integer multiple of this basic line also has an admittance matrix which is rational in λ. Since given a set of transmission lines for which the γ's are rationally related there always exists a smallest γ for which the admittance description is Eq. (VIII-1c), we will assume that all lines under consideration are rationally related, that is have rationally related γ's.

If next we assume the presence of lumped capacitors, inductors and gyrators, as well as the rationally related LC lines considered in the λ plane, a node analysis yields branch admittances of the form

$$y_{ij} = C_{ij}p + (1/L_{ij}p) + c_{ij}\lambda + (1/\ell_{ij}\lambda) + g_{ij} \qquad \text{(VIII-2a)}$$

and for $i \neq j$

$$y_{ji} = C_{ij}p + (1/L_{ij}p) + c_{ij}\lambda + (1/\ell_{ij}\lambda) - g_{ij} \qquad \text{(VIII-2b)}$$

Such a network we will call lumped distributed. We note that for passive elements a lumped distributed network has an admittance matrix $\underset{\sim}{y}(p,\lambda)$ at any ports which is positive-real in both variables and satisfies the lossless constraint

$$\underset{\sim}{y}(p,\lambda) = -\tilde{\underset{\sim}{y}}(-p,-\lambda) \qquad \text{(VIII-2c)}$$

In actual fact $\underset{\sim}{y}(p,\lambda)$ satisfies the 2-variable positive-real constraints. That is, by definition a matrix is 2-variable positive-real if [2, p. 252]

a) $\underset{\sim}{y}(p,\lambda)$ is holomorphic in $\mathrm{Re}\ p > 0$, $\mathrm{Re}\ \lambda > 0$.

b) $\underset{\sim}{y}(p,\lambda)$ is real for p and λ real in $\mathrm{Re}\ p > 0$, $\mathrm{Re}\ \lambda > 0$,

c) the Hermitian part of $\underset{\sim}{y}(p,\lambda)$ is positive semi-definite in $\mathrm{Re}\ p > 0$, $\mathrm{Re}\ \lambda > 0$.

A rational 2-variable positive-real matrix will also be called PR.

A property of interest for synthesis is that the poles on the imaginary axes can be separately extracted to yield [3, p. 34]

$$\underset{\sim}{y}(p,\lambda) = \underset{\sim}{y}_1(p) + \underset{\sim}{y}_2(\lambda) + \underset{\sim}{y}_o(p,\lambda) \qquad \text{(VIII-3)}$$

where $\underset{\sim}{y}_o$, $\underset{\sim}{y}_1$, and $\underset{\sim}{y}_2$ are all separately positive-real and rational when $\underset{\sim}{y}$ is rational; here $\underset{\sim}{y}_o$ has only poles which explicitly depend upon both p and λ. Of primary interest is the fact that $\underset{\sim}{y}_o(p,\lambda)$ has no poles at infinity in either variable.

To head toward synthesis it is of importance to note that those lines which have lengths one-half the basic length, called <u>unit-elements</u>, are described by

$$\textcircled{\underset{\sim}{Y}}_{ue}(\lambda) = \underset{\sim}{Y}_{ue}(p) = y_o \begin{bmatrix} \lambda & -\sqrt{\lambda^2-1} \\ -\sqrt{\lambda^2-1} & \lambda \end{bmatrix} \qquad \text{(VIII-4)}$$

Although such a description is not rational we observe that when loaded in a short circuit the unit-element appears as a capacitor of capacitance

y_o in the λ-plane when observed at the input. Similarly loading in an open circuit yields a λ-plane inductor at the input. These relationships can be depicted as shown in Fig. VIII-2.

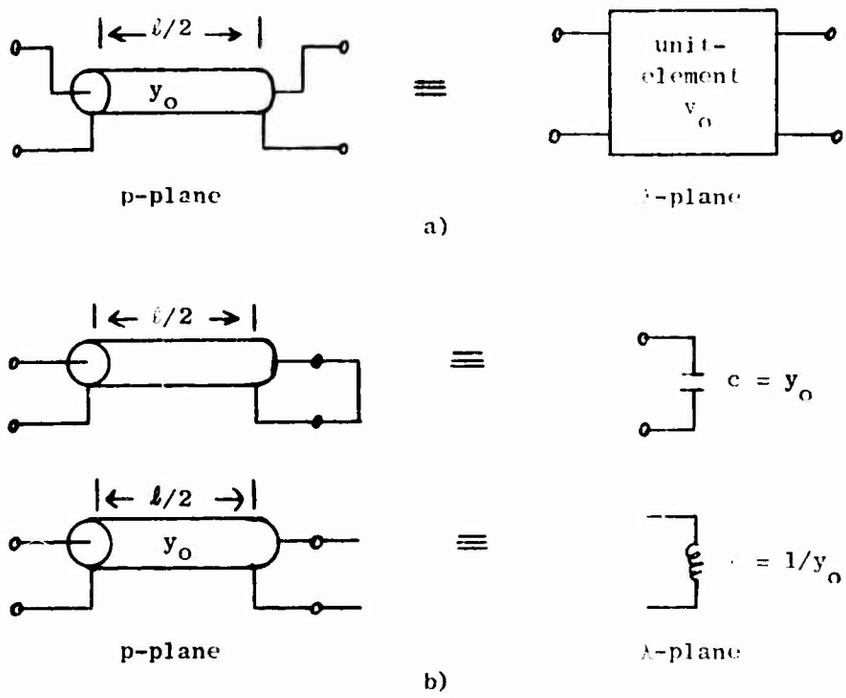

p vs. λ-Plane Elements

Figure VIII-2

With this last observation we see that a synthesis method could possibly arise by loading a p-plane (n+c)-port described by

$$\underset{\sim}{y}_{nc}(p) = \begin{bmatrix} \underset{\sim}{y}_{11}(p) & \underset{\sim}{y}_{12}(p) \\ \underset{\sim}{y}_{21}(p) & \underset{\sim}{y}_{22}(p) \end{bmatrix} \qquad \text{(VIII-5a)}$$

by a set of c unit λ-plane capacitors (which are p-plane shorted unit-elements), as shown in Fig. VIII-3. If such occurs then one obtains

$$\underset{\sim}{y}(p,\lambda) = \underset{\sim}{y}_{11}(p) - \underset{\sim}{y}_{12}(p)[\lambda \underset{\sim}{1}_c + \underset{\sim}{y}_{22}(p)]^{-1} \underset{\sim}{y}_{21}(p) \qquad \text{(VIII-5b)}$$

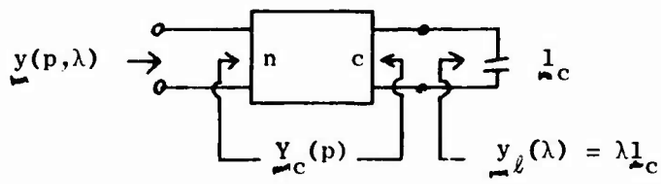

Possible Configuration

Figure VIII-3

We observe the following. In the general expansion of a 2-variable PR matrix, Eq. (VIII-3), the matrix $\underset{\sim}{y}_2(\lambda)$ can not be absorbed in Eq. (VIII-5b) while $\underset{\sim}{y}_1(p)$ can. However, both $\underset{\sim}{y}_1$ and $\underset{\sim}{y}_2$ can be synthesized by standard methods with the resulting networks being placed in parallel with that for $\underset{\sim}{y}_o$. Hence we really need only consider Eq. (VIII-5b) for $\underset{\sim}{y}_o(p,\lambda)$. Now Eq. (VIII-5b) is in the form of previous results except that the realization matrices vary with p. Thus we are after a realization $R(p) = \{\underset{\sim}{A}(p), \underset{\sim}{B}(p), \underset{\sim}{C}(p), \underset{\sim}{D}(p)\} = \{-\underset{\sim}{y}_{22}, \underset{\sim}{y}_{12}, -\underset{\sim}{y}_{21}, \underset{\sim}{y}_{11}\}$ in which case the previous theory should hold. In fact we can use the methods of Chapter IV to create a minimal realization R(p). However, the transformation to bring $\underset{\sim}{Y}_c(p)$ to be PR though obtainable in theory is not known in explicite form. Thus we proceed by directly finding a PR coupling admittance, this being possible because of the lossless nature imposed.

C. Minimal Realization Creation

To obtain a realization R(p) for an n×n PR $\underset{\sim}{y}_o(p,\lambda)$, for which $\underset{\sim}{Y}_c(p)$ is also PR we will simply modify the previous realization theory, presenting the method of Rao [4], in some places omitting the details of proof which can be rather lengthy for their content.

As before we write

$$\underset{\sim}{y}_o(p,\lambda) = \frac{\lambda^r \underset{\sim}{B}_{r+1}(p) + \lambda^{r-1}\underset{\sim}{B}_r(p) + \ldots + \lambda \underset{\sim}{B}_2(p) + B_1(p)}{\lambda^r + a_r(p)\lambda^{r-1} + \ldots + a_1(p)}$$

$$= \underset{\sim}{A}_{-1}(p) + \sum_{i=0}^{\infty} \frac{\underset{\sim}{A}_i(p)}{\lambda^{i+1}} \qquad \text{(VIII-6a)}$$

where the latter is the expansion about $\lambda = \infty$. The $rn \times rn$ **companion** matrix is defined as

$$\underset{\sim}{M}_n(p) = \begin{bmatrix} \underset{\sim}{0}_n & \underset{\sim}{1}_n & \underset{\sim}{0}_n & \cdots & \vdots \\ \underset{\sim}{0}_n & \underset{\sim}{0}_n & \underset{\sim}{1}_n & \cdots & \underset{\sim}{0}_n \\ \vdots & \vdots & & \ddots & \vdots \\ & & & & \underset{\sim}{1}_n \\ -a_1(p)\underset{\sim}{1}_n & -a_2(p)\underset{\sim}{1}_n & \cdots & & -a_r(p)\underset{\sim}{1}_n \end{bmatrix} \qquad \text{(VIII-6b)}$$

and a modified Hankel matrix defined by

$$\underset{\sim}{T}_r(p) = \begin{bmatrix} \underset{\sim}{A}_0(p) & \underset{\sim}{A}_1(p) & \cdots & \underset{\sim}{A}_{r-1}(p) \\ -\underset{\sim}{A}_1(p) & -\underset{\sim}{A}_2(p) & \cdots & -\underset{\sim}{A}_r(p) \\ \underset{\sim}{A}_2(p) & \underset{\sim}{A}_3(p) & \cdots & \underset{\sim}{A}_{r+1}(p) \\ \vdots & & & \vdots \\ (-1)^{r-1}\underset{\sim}{A}_{r-1}(p) & & \cdots & (-1)^{r-1}\underset{\sim}{A}_{2r-2}(p) \end{bmatrix} \qquad \text{(VIII-6c)}$$

Because of the lossless nature of $\underset{\sim}{y}_o$, $\underset{\sim}{T}_r(p)$ is equal to $\tilde{T}_r(-p)$ [the para-Hermitian property] and it is nonnegative semidefinite for $p = j\omega$. Consequently $\underset{\sim}{T}_r(p)$ can be factored, in fact by the method used at Eq. (VIII-5a), to obtain

$$\underset{\sim}{T}_r(p) = \underset{\sim}{U}(p)\underset{\sim}{U}(-p) \qquad \text{(VIII-6d)}$$

where $\underset{\sim}{U}(p)$ as well as its <u>left inverse</u> $\underset{\sim}{U}^{-1}(p)$ are holomorphic in $\mathrm{Re}\, p > 0$; this factorization preserves the real-rational nature of $\underset{\sim}{T}_r$, that is, $\underset{\sim}{U}(p)$ is also rational with real coefficients. Further the matrix $\underset{\sim}{U}$ can be taken of size $nr \times \delta_\lambda$ where δ_λ is the rank of $\underset{\sim}{T}_r(p)$ and then partitioned into $n \times \delta_\lambda$ blocks to define the entries in

$$\tilde{\underset{\sim}{U}}(p) = [\underset{\sim}{U}_o(p), \underset{\sim}{U}_1(p), \ldots, \underset{\sim}{U}_{r-1}(p)] \qquad \text{(VIII-6e)}$$

Noting that $\underset{\sim}{A}_o(p) = -\underset{\sim}{y}_{12}(p)\underset{\sim}{y}_{21}(p) = \underset{\sim}{U}_o(p)\tilde{\underset{\sim}{U}}_o(p)(-p)$ we see that as we desire $\underset{\sim}{y}_{21}(p) = -\tilde{\underset{\sim}{y}}_{12}(-p)$ because of the lossless constraint, we are led to define

$$\underset{\sim}{y}_{12}(p) = -\tilde{\underset{\sim}{y}}_{21}(-p) = \underset{\sim}{U}_o(p) \qquad \text{(VIII-7a)}$$

Noting further the previous method of defining $\underset{\sim}{A}$ by Eq. (IV-9) somewhat justifies the definition

$$\underset{\sim}{y}_{22}(p) = \underset{\sim}{U}_\ell^{-1}(p)\underset{\sim}{\Omega}_n(p)\underset{\sim}{U}_o(p) \qquad \text{(VIII-7b)}$$

Of course we also define

$$\underset{\sim}{y}_{11}(p) = \underset{\sim}{y}_o(p,\infty) \qquad \text{(VIII-7c)}$$

With these the coupling admittance matrix of Eq. (VIII-5a) is completely specified. In fact $\underset{\sim}{Y}_c(p)$ is PR and satisfies the lossless condition $\underset{\sim}{Y}_c(p) = -\tilde{\underset{\sim}{Y}}_c(-p)$ though both these properties, especially the PR one, are rather delicate to prove; the interested reader is referred to [4]. Further, the degree of $\underset{\sim}{Y}_c(p)$ is the minimum possible and equal to the p degree of $\underset{\sim}{y}_o(p,\lambda)$ defined as $\delta_p = \max_{\lambda_o} \delta[\underset{\sim}{y}_o(p,\lambda_o)]$. The number of λ-plane capacitors is equal to δ_λ where in fact $\delta_\lambda = \max_{p_o} \delta[\underset{\sim}{y}_o(p_o,\lambda)] =$ rank $\underset{\sim}{T}_r(p)$. We comment that the whole process could have been undertaken by making p-plane capacitor extractions from which we conclude that δ_p represents the minimum possible number of p-plane reactive elements, while δ_λ gives the minimum number of λ-plane reactive elements.

In summary, loading the PR $(n+\delta_\lambda)\times(n+\delta_\lambda)$ matrix

$$\underset{\sim}{Y}_c(p) = \begin{bmatrix} \underset{\sim}{y}_o(p,\infty) & \underset{\sim}{U}_o(p) \\ -\tilde{\underset{\sim}{U}}_o(-p) & \underset{\sim}{U}_\ell^{-1}(p)\underset{\sim}{\Omega}_n(-p)\underset{\sim}{U}_o(p) \end{bmatrix} \qquad \text{(VIII-7d)}$$

realization in ξ_λ unit λ-plane capacitors (which are shorted unit-elements) yields $\underline{y}_o(p,\lambda) = \underline{y}_o(p, \text{ctnh}[\gamma p/2])$ at the n input ports. A synthesis of the lossless coupling admittance $\underline{Y}_c(p)$ by a minimum number of reactive p-plane reactive elements, which is readily possible [1, Chap 8], yields a network possessing a minimum number of lumped reactive elements as well as (p-plane) transmission lines.

D. Examples

Let us synthesize the function

$$y(p,\lambda) = \frac{\lambda(p/2) + 1}{\lambda + ([2+p^2]/2p)} \qquad \text{(VIII-8a)}$$

We have

$$T_r = \frac{1}{2} - \frac{p^2}{4} = [-(\frac{1}{\sqrt{2}} + \frac{p}{2})][-(\frac{1}{\sqrt{2}} - \frac{p}{2})] \qquad \text{(VIII-8b)}$$

with

$$U_o(p) = -\frac{1}{2}(p+\sqrt{2}), \qquad U_\ell^{-1} = \frac{-2}{p+\sqrt{2}}, \qquad \xi_1 = -\frac{2+p^2}{2p} \qquad \text{(VIII-8c)}$$

for which

$$\underline{Y}_c(p) = \frac{1}{2}\begin{bmatrix} p & -p-\sqrt{2} \\ -p+\sqrt{2} & p+\frac{2}{p} \end{bmatrix} \qquad \text{(VIII-8d)}$$

Using a short circuited transmission line for the λ-plane capacitor yields the circuit of Fig. VIII-4.

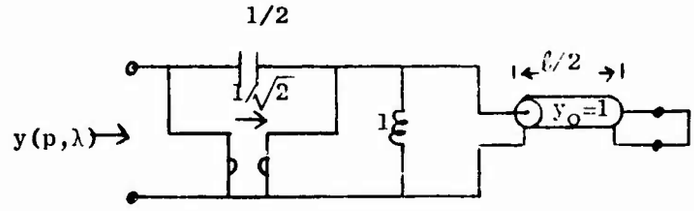

Example Synthesis

Figure VIII-4

To illustrate the difficulties of the more general situations consider the lossless PR

$$y(p,\lambda) = \frac{\lambda^2 p+2\lambda}{\lambda^2+p\lambda+2} \qquad \text{(VIII-9a)}$$

The expansion about $\lambda = \infty$ gives

$$y(p,\lambda) = p + \frac{(2-p^2)}{\lambda} + \frac{(p^3-4p)}{\lambda^2} + \frac{(-p^4+6p^2-4)}{\lambda^3} + \ldots \qquad \text{(VIII-9b)}$$

Thus

$$\underset{\sim}{T}_2 = \begin{bmatrix} 2-p^2 & p^3-4p \\ -p^3+4p & -p^4+6p^2-4 \end{bmatrix} \qquad \text{(VIII-9c)}$$

One then needs to factor this as discussed at Eq. (VIII-6d), which is no simple task. Hence we drop this example at this point with the comment that a simple factorization to produce the holomorphic factor would be most welcome.

E. Symmetrization

As we saw in the last figure the method may use gyrators where actually none are apparently required. Here we show how these gyrators can be avoided by the procedure of Koga [3, p. 44].

Given the PR admittance $\underset{\sim}{Y}_c(p)$, of Eq. (VIII-7d) for example, if it is not already symmetric we form the following coupling admittance matrix

$$\underset{\sim}{Y}_S(p) = \begin{bmatrix} \underset{\sim}{y}_{11} & \underset{\sim}{y}_{12S} & -\underset{\sim}{y}_{12A} \\ \tilde{\underset{\sim}{y}}_{12S} & \underset{\sim}{y}_{22S} & -\underset{\sim}{y}_{22A} \\ \tilde{\underset{\sim}{y}}_{12A} & \tilde{\underset{\sim}{y}}_{22A} & \underset{\sim}{y}_{22S} \end{bmatrix} \qquad \text{(VIII-10a)}$$

where

$$2\underset{\sim}{y}_{12S} = \underset{\sim}{y}_{12} + \tilde{\underset{\sim}{y}}_{21} \qquad 2\underset{\sim}{y}_{12A} = \underset{\sim}{y}_{12} - \tilde{\underset{\sim}{y}}_{21} \qquad \text{(VIII-10b)}$$

$$2\underset{\sim}{y}_{22S} = \underset{\sim}{y}_{22} + \tilde{\underset{\sim}{y}}_{22} \qquad 2\underset{\sim}{y}_{22A} = \underset{\sim}{y}_{22} - \tilde{\underset{\sim}{y}}_{22} \qquad \text{(VIII-10c)}$$

with the subscript S and A standing for the symmetric and (skew) antisymmetric parts. The matrix $\underset{\sim}{Y}_S(p)$ is PR and lossless with $\underset{\sim}{Y}_c(p)$, and $\underset{\sim}{y}_o(p,\lambda)$ results at the first n ports of a circuit realization by loading the final $2\delta_\lambda$ ports in unit λ-plane capacitors, as we will discuss below. If next we extract a (cascade) gyrator from each of the final δ_λ ports, as shown in Fig. VIII-5a), we obtain a symmetric coupling admittance matrix $\underset{\sim}{Y}_C$; for example, when (as is the normal situation) $\underset{\sim}{y}_{22S}$ is nonsingular

$$\underset{\sim}{Y}_C(p) = \begin{bmatrix} \underset{\sim}{y}_{11} + \underset{\sim}{y}_{12A}\underset{\sim}{y}_{22S}^{-1}\tilde{\underset{\sim}{y}}_{12A} & \underset{\sim}{y}_{12S} + \underset{\sim}{y}_{12A}\underset{\sim}{y}_{22S}^{-1}\tilde{\underset{\sim}{y}}_{22A} & \underset{\sim}{y}_{12A}\underset{\sim}{y}_{22S}^{-1} \\ \tilde{\underset{\sim}{y}}_{12S} + \underset{\sim}{y}_{22A}\underset{\sim}{y}_{22S}^{-1}\tilde{\underset{\sim}{y}}_{12A} & \underset{\sim}{y}_{22S} + \underset{\sim}{y}_{22A}\underset{\sim}{y}_{22S}^{-1}\tilde{\underset{\sim}{y}}_{22A} & \underset{\sim}{y}_{22A}\underset{\sim}{y}_{22S}^{-1} \\ \underset{\sim}{y}_{22S}^{-1}\tilde{\underset{\sim}{y}}_{12A} & \underset{\sim}{y}_{22S}^{-1}\tilde{\underset{\sim}{y}}_{22A} & \underset{\sim}{y}_{22S}^{-1} \end{bmatrix} \qquad \text{(VIII-10d)}$$

The extracted gyrators can be combined with the loading capacitors to yield s-plane inductors while $\underset{\sim}{Y}_C(p)$ can be synthesized by a reciprocal, passive, lossless p-plane configuration. The overall structure is then reciprocal with $\underset{\sim}{y}_c(p,\lambda)$ and as shown in Fig. VIII-5b).

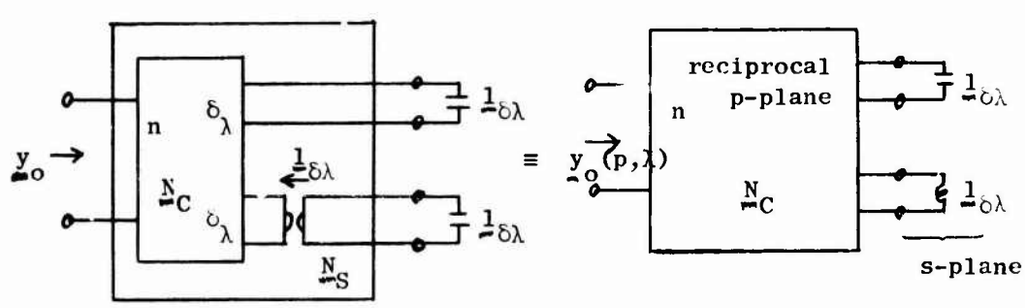

a) b)

Procedure for Reciprocal Synthesis

of a Symmetric $\underset{\sim}{y}_o(p,\lambda)$

Figure VIII-5

To see why the method works let us reason as follows. Since $\underset{\sim}{y}_o(p,\lambda)$ is assumed symmetric we can write

$$\underset{\sim}{y}_o = \frac{1}{2}(\underset{\sim}{y}_o + \tilde{\underset{\sim}{y}}_o) = \underset{\sim}{y}_{11}(p) - \frac{1}{2}\{\underset{\sim}{y}_{12}(p)[\underset{\sim}{y}_{22}(p)+\lambda\underset{\sim}{1}_{o\lambda}]^{-1}\underset{\sim}{y}_{21}(p) \qquad \text{(VIII-11a)}$$

$$+ \tilde{\underset{\sim}{y}}_{21}(p)[\tilde{\underset{\sim}{y}}_{22}(p)+\lambda\underset{\sim}{1}_{o\lambda}]^{-1}\tilde{\underset{\sim}{y}}_{12}(p)$$

for which a realization is seen to come from the coupling admittance matrix

$$\underset{\sim}{Y}_1(p) = \begin{bmatrix} \underset{\sim}{y}_{11} & \frac{1}{\sqrt{2}}\underset{\sim}{y}_{12} & \frac{1}{\sqrt{2}}\tilde{\underset{\sim}{y}}_{21} \\ \frac{1}{\sqrt{2}}\underset{\sim}{y}_{21} & \underset{\sim}{y}_{22} & \underset{\sim}{0} \\ \frac{1}{\sqrt{2}}\tilde{\underset{\sim}{y}}_{12} & \underset{\sim}{0} & \tilde{\underset{\sim}{y}}_{22} \end{bmatrix} \qquad \text{(VIII-11b)}$$

That is, a circuit realization for $\underset{\sim}{Y}_1$ yields $\underset{\sim}{y}_o$ at the input when terminated by $2\underset{\sim}{1}_{o\lambda}$ unit λ-plane capacitors. Next we find an equivalent realization using Eq. (V-2a) with the orthogonal transformation

$$\underset{\sim}{T} = \frac{1}{\sqrt{2}}\begin{bmatrix} \underset{\sim}{1}_{o\lambda} & -\underset{\sim}{1}_{o\lambda} \\ \underset{\sim}{1}_{o\lambda} & \underset{\sim}{1}_{o\lambda} \end{bmatrix} \qquad \text{(VIII-11c)}$$

Thus we obtain

$$\underset{\sim}{Y}_2(p) = [\underset{\sim}{1}_n + \underset{\sim}{T}]\underset{\sim}{Y}_1(p)[\underset{\sim}{1}_n + \underset{\sim}{T}] \qquad \text{(VIII-11d)}$$

which gives Eq. (VIII-11a). The PR property as well as losslessness is preserved through these operations. Finally we comment that if $\underset{\sim}{y}_{22s}$ is not nonsingular for Eq. (VIII-10d) it can be made so by an orthogonal transformation to yield $\underset{\sim}{y}_{22s}$, $\tilde{\underset{\sim}{T}}_1 \underset{\sim}{y}_{22s} \tilde{\underset{\sim}{T}}_1$ [illegible] a matrix [illegible] $\underset{\sim}{1}_n$ [illegible].

The previous example of Eq. (VIII-8d) illustrates the procedure. We have [illegible]

NOT REPRODUCIBLE

$$\underset{\sim}{Y}_S(p) = \frac{1}{2}\begin{bmatrix} p & -p & \sqrt{2} \\ -p & p + \frac{2}{p} & 0 \\ -\sqrt{2} & 0 & p + \frac{2}{p} \end{bmatrix} \qquad \text{(VIII-12a)}$$

Extraction of the gyrator at port three yields

$$\underset{\sim}{Y}_C(p) = \frac{1}{2}\begin{bmatrix} p + \frac{2p}{p^2+2} & -p & \frac{-\sqrt{2}p}{p^2+2} \\ -p & p + \frac{2}{p} & 0 \\ \frac{-\sqrt{2}p}{p^2+2} & 0 & \frac{p}{p^2+2} \end{bmatrix} \qquad \text{(VIII-12b)}$$

Synthesis of $\underset{\sim}{Y}_C(p)$, which is symmetric, yields $y_o(p,\lambda)$ at the input when the second port is loaded in a unit capacitor and the third port in a unit inductor, the latter two being p-plane short and open circuited LC transmission lines. Note however that four p-plane (lumped) reactive elements must be used to synthesize $\underset{\sim}{Y}_C(p)$, in contrast to the two used at Fig. VIII-4.

F. Discussion

Given a nonrational admittance matrix in p, $\underset{\sim}{Y}(p)$, if there exists a γ such that $\underset{\sim}{Y}(p) = \underset{\sim}{y}(p,\lambda)$ is rational, PR, and lossless in the two variables p and $\lambda = \text{ctanh}(\gamma p/2)$, then the procedures of this chapter can be used to obtain a synthesis. In particular the synthesis uses both lumped and distributed LC components, a minimum number of all types when gyrators are also allowed. If the original matrix is symmetric then also a series of operations can be used to eliminate the gyrators, but an excess number of reactive elements is needed for the given procedure, though it seems that other methods should be available to reduce this number.

In the treatment given we have extracted λ-plane elements as the load to obtain realization matrices which depend upon the other variable p, $R(p) = \{\underset{\sim}{A}(p), \underset{\sim}{B}(p), \underset{\sim}{C}(p), \underset{\sim}{D}(p)\}$. Of course we could have reversed

the role of λ and p since in $\underset{\sim}{y}(p,\lambda)$ there is no real preference. The only difference occurs in the synthesis where the extraction of the lumped p-plane elements means that the λ-plane coupling network needs to be synthesized in terms of distributed elements. This latter though can be conveniently carried out in terms of cascade synthesis methods using the unit-elements [1, Chap. 7] and is, thus, in some ways superior.

The same methods can be used for the synthesis of lumped-distributed RC networks of considerable interest to the theory of integrated circuits. For such one introduces a different variable $s = \sqrt{p}$. Then a given admittance $\underset{\sim}{Y}(p)$ can be synthesized by a synthesis of the lossless admittance [5]

$$\underset{\sim}{y}(s,\lambda) = \frac{1}{\sqrt{p}} \underset{\sim}{Y}(p) \qquad \text{(VIII-13)}$$

Such a synthesis can follow that of the text with the s-plane elements replaced by resisters (for the inductors) and capacitors while the λ-plane elements are replaced by RC lines to obtain the original p-plane $\underset{\sim}{Y}(p)$.

In the case where there are nonrationally related lines the methods discussed can be extended by considering ν-variable matrices, with $\nu > 2$. Although minimal realizations can relatively easily be given, as yet it has not been possible to obtain a PR coupling admittance in terms of ν-1 of the variables.

G. References

1. Newcomb, R. W., "Linear Multiport Synthesis," McGraw-Hill, New York, 1966.
2. Ozaki, H., and T. Kasami, "Positive Real Functions of Several Variables and Their Applications to Variable Networks," IRE Transactions on Circuit Theory, Vol. CT-7, No. 3, September 1960, pp. 251-260.
3. Koga, T., "Synthesis of Finite Passive n-Ports with Prescribed Two-Variable Reactance Matrices," IEEE Transactions on Circuit Theory, Vol. CT-13, No. 1, March 1966, pp. 31-52.

4. Rao, T. N., "Synthesis of Lumped-Distributed RC Networks," Stanford University, Ph.D. Dissertation, May 1967.

5. Rao, T. N., and R. W. Newcomb, "Synthesis of Lumped-Distributed RC n-Ports," IEEE Transactions on Circuit Theory, Vol. CT-13, No. 4, December 1966, pp. 458-460.

H. Exercises

1. Synthesize the lossless PR

   a) $y(p,\lambda) = \dfrac{2\lambda(2p^2+1)}{4\lambda p+2p^2+1}$

   b) $y(p,\lambda) = \dfrac{4\lambda p+2p^2+1}{2\lambda(2p^2+1)}$

2. Prove that $\underset{\sim}{Y}_C(p)$ of Eq. (VIII-7d) is PR and lossless.
3. Carry out the steps for p-plane, instead of λ-plane, extractions.
4. Show that the gyrator extraction of Fig. VIII-5a) yields $\underset{\sim}{Y}_C(p)$ of Eq. (VIII-10d). Carry out the details when $\underset{\sim}{y}_{22S}$ is singular.
5. Obtain a realization for $\underset{\sim}{y}_o(p,\lambda)$ using the method of Chapter IV and show how to obtain the realization of this chapter from the other.
6. Analyze any 2-port lossless lumped-distributed circuit and from the resulting $\underset{\sim}{y}(p,\lambda)$ synthesize the network by the methods of this chapter. Compare the final circuit with the original and discuss the problems raised.

Il y a ainsi une part de la vie, -- et c'est la meilleure, la plus pure et la plus grande, -- qui ne se mêle pas à la vie ordinaire, et les yeux des amants eux-mêmes ne percent presque jamais cette digue de silence et d'amour.

M. Maeterlinck
"Les Avertis" du "Trésor des Humbles"

CHAPTER IX

TIME-VARIABLE SYNTHESIS

A. Summary

Using similar but generally somewhat different techniques than for time-invariant structures, realizations for impulse responses can be obtained and manipulated to yield synthesis results. Of primary interest is that discussed for transfer voltage functions and that for special types of admittances.

B. Properties of Impulse Response Matrices

If we are given the state-variable equations with time variable coefficients

$$\dot{\underset{\sim}{s}}(t) = \underset{\sim}{A}(t)\underset{\sim}{s}(t) + \underset{\sim}{B}(t)\underset{\sim}{u}(t) \qquad \text{(IX-1a)}$$

$$\underset{\sim}{y}(t) = \underset{\sim}{C}(t)\underset{\sim}{s}(t) + \underset{\sim}{D}(t)\underset{\sim}{u}(t) \qquad \text{(IX-1b)}$$

we can find the zero state output through

$$\underset{\sim}{y}(t) = \int_{-\infty}^{\infty} [\underset{\sim}{D}(t)\delta(t-\tau) + \underset{\sim}{C}(t)\underset{\sim}{\Phi}(t,\tau)\underset{\sim}{B}(\tau)]\underset{\sim}{u}(\tau)d\tau \qquad \text{(IX-1c)}$$

where $\underset{\sim}{\Phi}(t,\tau)$ is the state transition matrix satisfying

$$\frac{d\underset{\sim}{\Phi}(t,\tau)}{dt} = \underset{\sim}{A}(t)\underset{\sim}{\Phi}(t,\tau), \quad t > \tau \tag{IX-1d}$$

$$\underset{\sim}{\Phi}(\tau,\tau) = \underset{\sim}{1}_k, \quad \underset{\sim}{\Phi}(t,\tau) = \underset{\sim}{0}_k \quad t < \tau \tag{IX-1e}$$

In actual fact since $\underset{\sim}{\Phi}$ satisfies the differential equation of Eq. (IX-1d) it can be shown [1, p.530] to be the product of two matrices, one in t and one in τ

$$\underset{\sim}{\Phi}(t,\tau) = \underset{\sim}{\Xi}(t)\underset{\sim}{\Lambda}(\tau)1(t-\tau) \tag{IX-1f}$$

where $1(t-\tau)$ is the unit step function. Further the number of rows in $\Lambda(\tau)$ can be assumed reduced to its minimal size δ, this size being independent of τ for reasonably behaved $\underset{\sim}{A}(t)$ [1, p.530]

As a consequence, we can associate with the state-variable equations an impulse response matrix [here $\delta(t)$ is the unit impulse]

$$\underset{\sim}{T}(t,\tau) = \underset{\sim}{D}(t)\delta(t-\tau)+\underset{\sim}{C}(t)\underset{\sim}{\Xi}(t)\underset{\sim}{\Lambda}(\tau)\underset{\sim}{B}(\tau)1(t-\tau) \tag{IX-2a}$$

such that

$$\underset{\sim}{y}(t) = \int_{-\infty}^{\infty} \underset{\sim}{T}(t,\tau)\underset{\sim}{u}(\tau)d\tau \tag{IX-2b}$$

This latter can be conveniently denoted as

$$\underset{\sim}{y} = \underset{\sim}{T}\bullet\underset{\sim}{u} \tag{IX-2c}$$

Since $\underset{\sim}{T}$ contains impulses it is often referred to as a distributional kernel defining the mapping of $\underset{\sim}{u}$ into $\underset{\sim}{y}$, $\underset{\sim}{y} = \underset{\sim}{T}\bullet\underset{\sim}{u}$. If we have two such mappings defined by kernels $\underset{\sim}{T}_1$ and $\underset{\sim}{T}_2$ we can apply one after another, as might occur in a cascade of voltage transfer functions. This leads to the definition of the composition $\underset{\sim}{T}_1 o \underset{\sim}{T}_2$ through

$$\underset{\sim}{y} = \underset{\sim}{T}_1\bullet[\underset{\sim}{T}_2\bullet\underset{\sim}{u}] = [\underset{\sim}{T}_1 o \underset{\sim}{T}_2]\bullet\underset{\sim}{u} \tag{IX-2d}$$

As an integral this composition takes the form

$$\underset{\sim}{T}_1 o \underset{\sim}{T}_2(t,\tau) = \int_{-\infty}^{\infty} \underset{\sim}{T}_1(t,\lambda)\underset{\sim}{T}_2(\lambda,\tau)d\lambda \qquad \text{(IX-2e)}$$

Through the concept of composition the inverse of a $k \times k$ kernel can be defined by

$$\underset{\sim}{T}^{-1} o \underset{\sim}{T} = \underset{\sim}{T} o \underset{\sim}{T}^{-1} = \delta(t-\tau)\underset{\sim}{1}_k \qquad \text{(IX-2f)}$$

Consequently $\underset{\sim}{T}$ can be given the representation alternate to Eq. (IX-2a) as

$$\underset{\sim}{T} = \underset{\sim}{D}\delta + (\underset{\sim}{C}\delta) o [\delta' \underset{\sim}{1}_k - \underset{\sim}{A}\delta]^{-1} o (\underset{\sim}{B}\delta) \qquad \text{(IX-3a)}$$

Since $[\delta'(t-\tau)]^{-1} = 1(t-\tau)$ we see by comparison with this last expression that if we are given

$$\underset{\sim}{T}(t,\tau) = \underset{\sim}{H}(t)\delta(t-\tau) + \underset{\sim}{\Psi}(t)\underset{\sim}{\theta}(\tau)1(t-\tau) \qquad \text{(IX-3b)}$$

then a possible realization is

$$\underset{\sim}{A} = \underset{\sim}{0}, \quad \underset{\sim}{B} = \underset{\sim}{\theta}, \quad \underset{\sim}{C} = \underset{\sim}{\Psi}, \quad \underset{\sim}{D} = \underset{\sim}{H} \qquad \text{(IX-3c)}$$

This is minimal if the number of rows in $\underset{\sim}{\theta}$ has been minimized.

If we make a transformation on the state

$$\hat{\underset{\sim}{s}}(t) = \underset{\sim}{\mathcal{T}}(t)\underset{\sim}{s}(t) \qquad \text{(IX-4a)}$$

then, since the transforming matrix must now be differentiated we have

$$\hat{\underset{\sim}{A}} = \underset{\sim}{\mathcal{T}}\underset{\sim}{A}\underset{\sim}{\mathcal{T}}^{-1} + \dot{\underset{\sim}{\mathcal{T}}}\underset{\sim}{\mathcal{T}}^{-1}, \quad \hat{\underset{\sim}{B}} = \underset{\sim}{\mathcal{T}}\underset{\sim}{B}, \quad \hat{\underset{\sim}{C}} = \underset{\sim}{C}\underset{\sim}{\mathcal{T}}^{-1} \qquad \text{(IX-4b)}$$

Consequently, the freedom of using time-variable transformations allows one to change the structure of the $\underset{\sim}{A}$ matrix, resulting in some rather interesting phenomena.

C. Passive Voltage Transfer Function Synthesis

Let us consider the problem of synthesis of kernels mapping voltages into voltages; the material follows to a large extent the ideas of Silverman [2].

As a preliminary, let us first observe that if we define, for a given $\underset{\sim}{A}(t)$ and a fixed t_o,

$$\underset{\sim}{V}(t) = \int_{t_o}^{t} \underset{\sim}{\Phi}(t,\tau)\tilde{\underset{\sim}{\Phi}}(t,\tau)d\tau, \quad t > t_o \tag{IX-5a}$$

(which is positive definite) then the choice

$$\underset{\sim}{\mathcal{J}} = (\underset{\sim}{V}^{-1})^{1/2} \tag{IX-5b}$$

yields on using Eqs. (IX-1d, 4b).

$$\hat{\underset{\sim}{A}} + \tilde{\hat{\underset{\sim}{A}}} = -\underset{\sim}{V}^{-1} \tag{IX-5c}$$

As a consequence, from what we previously learned at Eq. (VII-11) we should be able to use this transformation for a passive synthesis. We comment, however, that $\underset{\sim}{V}(t)$ varies with time even in the time-invariant case so that slightly different procedures are preferable when $\underset{\sim}{A}$, $\underset{\sim}{B}$, $\underset{\sim}{C}$ are constant.

As the next preliminary let us synthesize a voltage to current transfer function (kernel) $\underset{\sim}{T}$, $\underset{\sim}{i}_2' = \underset{\sim}{T} \bullet \underset{\sim}{v}_1$, where $\underset{\sim}{i}_2'$ and $\underset{\sim}{v}_1$ are measured at different ports. Given any realization, say the one of Eq. (IX-3c) let us perform the transformation of Eq. (IX-5b) to obtain

$$\dot{\hat{\underset{\sim}{s}}} = \hat{\underset{\sim}{A}}\hat{\underset{\sim}{s}} + \hat{\underset{\sim}{B}}\underset{\sim}{v}_1 \tag{IX-6a}$$

$$\underset{\sim}{i}_2' = \hat{\underset{\sim}{C}}\hat{\underset{\sim}{s}} + \underset{\sim}{D}\underset{\sim}{v}_1 \tag{IX-6b}$$

Let us next introduce another set of variables, the current $\underset{\sim}{i}_1$ associated with the first ports and $\underset{\sim}{v}_2'$ the voltage associated with the final ports to write

$$\dot{\hat{\underset{\sim}{s}}} = \hat{\underset{\sim}{A}}\hat{\underset{\sim}{s}} + [\hat{\underset{\sim}{B}}, \tilde{\underset{\sim}{C}}] \begin{bmatrix} \underset{\sim}{v}_1 \\ \underset{\sim}{v}_2' \end{bmatrix} \tag{IX-6c}$$

$$\begin{bmatrix} \underset{\sim}{i}_1 \\ \underset{\sim}{i}_2' \end{bmatrix} = \begin{bmatrix} \tilde{\hat{\underset{\sim}{B}}} \\ \hat{\underset{\sim}{C}} \end{bmatrix} \hat{\underset{\sim}{s}} + \begin{bmatrix} \underset{\sim}{0} & -\underset{\sim}{D} \\ \underset{\sim}{D} & \underset{\sim}{0} \end{bmatrix} \begin{bmatrix} \underset{\sim}{v}_1 \\ \underset{\sim}{v}_2' \end{bmatrix} \tag{IX-6d}$$

Note that if we set $\underset{\sim}{v}_2' = \underset{\sim}{0}$ and ignore the input port currents $\underset{\sim}{i}_1$ then the original description is returned. However, as in the time-invariant case, Eqs. (IX-6c,d) define a coupling (time-variable) resistive network through

$$\underset{\sim}{Y}_c(t,\tau) = \begin{bmatrix} \underset{\sim}{0} & -\tilde{\underset{\sim}{D}}(t) & -\tilde{\hat{\underset{\sim}{B}}}(t) \\ \underset{\sim}{D}(t) & \underset{\sim}{0} & -\hat{\underset{\sim}{C}}(t) \\ \hat{\underset{\sim}{B}}(t) & \hat{\underset{\sim}{C}}(t) & -\hat{\underset{\sim}{A}}(t) \end{bmatrix} \delta(t-\tau) \tag{IX-6e}$$

Note that, by virtue of Eq. (IX-5c)

$$\underset{\sim}{Y}_c + \tilde{\underset{\sim}{Y}}_c = \underset{\sim}{0} + \dot{\underset{\sim}{V}}^{-1}(t)\delta(t-\tau) \tag{IX-6f}$$

in which case $\underset{\sim}{Y}_c$ can be synthesized by time-variable gyrators and resistors both of which are passive. Termination of the resultant network in unit capacitors yields Eq. (IX-6c,d). At the final ports we can next insert unit gyrators to obtain

$$\underset{\sim}{v}_2 = \underset{\sim}{i}_2', \quad \underset{\sim}{i}_2 = \underset{\sim}{v}_2' \tag{IX-7a}$$

Setting $\underset{\sim}{v}_2' = \underset{\sim}{0}$ results in an open circuit load while $\underset{\sim}{i}_2' = \underset{\sim}{v}_2$ yields

$$\underset{\sim}{v}_2 = \underset{\sim}{T} \bullet \underset{\sim}{v}_1 \tag{IX-7b}$$

As a consequence the procedure results, for $t > t_o$, in a passive realization of any $\underset{\sim}{T}(t,\tau)$ of the form of Eq. (IX-3b). Since practically such constructs are only used after a finite time, the $t > t_o$ restriction is of no practical restriction; but in some cases $t_o = -\infty$ can be used

in which case the theory of Silverman results when $\underset{\sim}{D} = \underset{\sim}{0}$. The synthesis is summarized in Fig. IX-1.

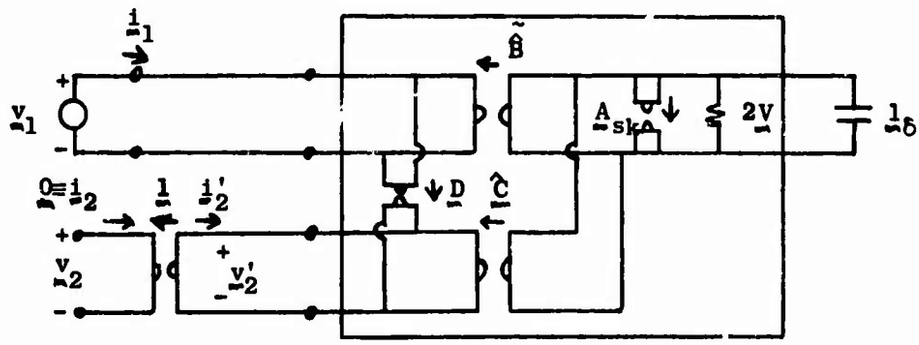

Transfer Voltage Realization

Figure IX-1

As an example to illustrate the various points let us synthesize the time-invariant transfer function

$$\frac{V_2}{V_1} = \frac{3p}{p+2} = 3 + \frac{-6}{p+2} \qquad \text{(IX-8a)}$$

We have

$$T(t,\tau) = 3\delta(t-\tau) + (-6e^{-2t})(e^{2t})1(t-\tau) \qquad \text{(IX-8b)}$$

For a realization we can take

$$A = 0, \quad B = e^{2t}, \quad C = -6e^{-2t}, \quad D = 3 \qquad \text{(IX-8c)}$$

Then, for any fixed t_o,

$$V(t) = \int_{t_o}^{t} d\tau = t-t_o, \quad t > t_o \qquad \text{(IX-8d)}$$

which is positive definite for $t > t_o$ as expected; we have for Eq. (IX-5b)

$$\mathcal{J}(t) = \frac{1}{\sqrt{t-t_o}} \qquad \text{(IX-8e)}$$

From the transformed realization equations we find

$$\hat{A} = \dot{\mathcal{J}}\mathcal{J}^{-1} = \frac{-1/2}{\sqrt{t-t_o}}, \quad \hat{B} = \frac{e^{2t}}{\sqrt{t-t_o}}, \quad \hat{C} = -6\sqrt{t-t_o}\; e^{-2t}, \quad D = 3 \qquad \text{(IX-8f)}$$

Thus $\underset{\sim}{Y}_c$ takes the form

$$\underset{\sim}{Y}_c(t,\tau) = \begin{bmatrix} 0 & -3 & -e^{2t}/\sqrt{t-t_o} \\ 3 & 0 & 6\sqrt{t-t_o}\; e^{-2t} \\ \dfrac{e^{2t}}{\sqrt{t-t_o}} & -6\sqrt{t-t_o}\; e^{-2t} & \dfrac{1/2}{\sqrt{t-t_o}} \end{bmatrix} \delta(t-\tau) \qquad \text{(IX-8g)}$$

The structure of the circuit realization is shown in Fig. IX-2. It should be observed that a) the elements are all passive, (b) the elements

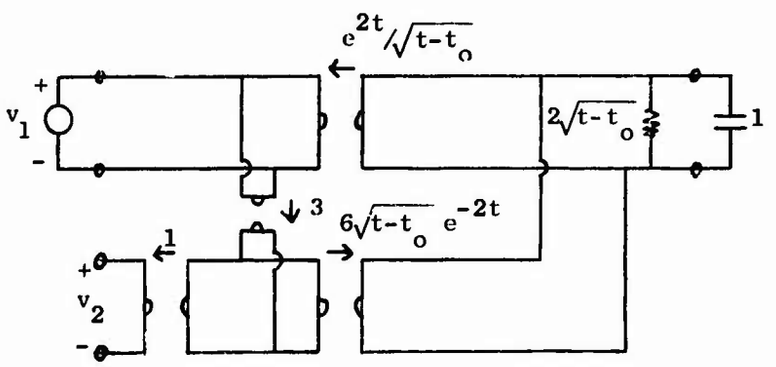

Circuit for $V_2 = (3p/[p+2])V_1$

Figure IX-2

are time-variable even though the overall network is time-invariant, c) the elements become unbounded for t approaching t_o. If we would have chosen $A = -2$ and $t_o = -\infty$ this latter (unboundedness) could have been avoided while a slightly different approach (see the Exercises) would allow a time-invariant synthesis.

D. Passive Admittance Synthesis

Following the previous ideas we can form the coupling admittance matrix

$$\underset{\sim}{Y}_c(t,\tau) = \begin{bmatrix} \underset{\sim}{D}(t) & -\underset{\sim}{C}(t)\underset{\sim}{\mathcal{J}}^{-1}(t) \\ \underset{\sim}{\mathcal{J}}(t)\underset{\sim}{B}(t) & -\underset{\sim}{\mathcal{J}}(t)\underset{\sim}{A}(t)\underset{\sim}{\mathcal{J}}^{-1}(t)-\dot{\underset{\sim}{\mathcal{J}}}(t)\underset{\sim}{\mathcal{J}}^{-1}(t) \end{bmatrix}\delta(t-\tau) \qquad \text{(IX-9a)}$$

We then wish for a passive synthesis to be able to choose $\underset{\sim}{\mathcal{J}}$ such that the symmetric part of $\underset{\sim}{Y}_c$ is positive semidefinite. On evaluating this symmetric part we have, assuming a symmetric $\underset{\sim}{\mathcal{J}}$,

$$\underset{\sim}{Y}_c+\tilde{\underset{\sim}{Y}}_c = \begin{bmatrix} \underset{\sim}{D}+\tilde{\underset{\sim}{D}} & [\tilde{B}\mathcal{J}^2-C]\mathcal{J}^{-1} \\ \underset{\sim}{\mathcal{J}}^{-1}[\underset{\sim}{\mathcal{J}}^2\underset{\sim}{B}-\tilde{\underset{\sim}{C}}] & -\underset{\sim}{\mathcal{J}}^{-1}(\underset{\sim}{\mathcal{J}}^2\underset{\sim}{A}+\tilde{\underset{\sim}{A}}\mathcal{J}^2+[\dot{\underset{\sim}{\mathcal{J}}}^2])\mathcal{J}^{-1} \end{bmatrix}\delta \qquad \text{(IX-9b)}$$

where we have also used $\dot{\underset{\sim}{\mathcal{J}}}^2 = \dot{\underset{\sim}{\mathcal{J}}}\underset{\sim}{\mathcal{J}}+\underset{\sim}{\mathcal{J}}\dot{\underset{\sim}{\mathcal{J}}}$. In the case where $\underset{\sim}{D}+\tilde{\underset{\sim}{D}}$, which is twice the symmetric part of $\underset{\sim}{D}$, is positive definite and $\underset{\sim}{A}$, $\underset{\sim}{B}$, $\underset{\sim}{C}$ have bounded entries the (Riccati) equation

$$\underset{\sim}{\mathcal{J}}^2\underset{\sim}{A}+\tilde{\underset{\sim}{A}}\mathcal{J}^2+[\dot{\underset{\sim}{\mathcal{J}}}^2] = -[\underset{\sim}{\mathcal{J}}^2\underset{\sim}{B}-\tilde{\underset{\sim}{C}}][\underset{\sim}{D}+\tilde{\underset{\sim}{D}}]^{-1}[\tilde{\underset{\sim}{B}}\mathcal{J}^2-\underset{\sim}{C}] \qquad \text{(IX-9c)}$$

is known [3] to have a solution for a nonsingular <u>symmetric</u> $\underset{\sim}{\mathcal{J}}$. Consequently,

$$\underset{\sim}{Y}_c+\tilde{\underset{\sim}{Y}}_c = \begin{bmatrix} (\underset{\sim}{D}+\tilde{\underset{\sim}{D}})^{1/2} & \underset{\sim}{0} \\ \underset{\sim}{0} & \underset{\sim}{\mathcal{J}}^{-1}(\underset{\sim}{\mathcal{J}}^2\underset{\sim}{B}-\tilde{\underset{\sim}{C}})(\underset{\sim}{D}+\tilde{\underset{\sim}{D}})^{-1/2} \end{bmatrix}\begin{bmatrix} \underset{\sim}{1}_n \\ \underset{\sim}{1}_n \end{bmatrix}\begin{bmatrix} \underset{\sim}{1}_n & \underset{\sim}{1}_n \end{bmatrix}\begin{bmatrix} (\underset{\sim}{D}+\tilde{\underset{\sim}{D}})^{1/2} & \underset{\sim}{0} \\ \underset{\sim}{0} & (\underset{\sim}{D}+\tilde{\underset{\sim}{D}})^{-1/2}(\underset{\sim}{B}\mathcal{J}^2-\underset{\sim}{C})\mathcal{J}^{-1} \end{bmatrix}$$

(IX-9d)

which shows that $\underset{\sim}{Y}_c$ can be synthesized by n constant resistors loading time-variable gyrators (for the symmetric part) and time-variable gyrators (for the skew-symmetric part); here n is the number of terminal ports.

We conclude that if a given $n\times n$ admittance kernel

$$\underset{\sim}{y}(t,\tau) = \underset{\sim}{D}(t)\delta(t-\tau) + \underset{\sim}{C}(t)\underset{\sim}{B}(\tau)1(t-\tau) \qquad \text{(IX-10)}$$

has the symmetric part of $\underset{\sim}{D}$ positive definite (as well as bounded minimal $\underset{\sim}{C}$ and $\underset{\sim}{B}$ matrices) then a passive synthesis can be given. Such results by solving the nonlinear Riccati equation, (IX-9c), for $\underset{\sim}{\mathfrak{J}}(t)$, and forming $\underset{\sim}{Y}_c$ which then yields $\underset{\sim}{y}(t,\tau)$ by loading of the passive coupling structure in unit capacitors. Several observations are worth noting. First $\underset{\sim}{\mathfrak{J}}$ is very difficult to obtain, if not impossible practically, since a nonlinear variable coefficient differential equation must be solved. Second, Eq. (IX-9d) shows where difficulty arises if the symmetric part of $\underset{\sim}{D}$ is singular; hence the method seems hard to extend to cover more general cases. Third, the presence of terms $\underset{\sim}{E}(t)\delta'(t-\tau)$ is handled by writing $\underset{\sim}{E}(t)\delta'(t-\tau) = \underset{\sim}{\tilde{J}}(t)\underset{\sim}{J}(\tau)\delta'(t-\tau) - \underset{\sim}{J}(t)\dot{\underset{\sim}{J}}(t)\delta(t-\tau)$; if $\underset{\sim}{y}$ is known to come from a passive network this decomposition is always possible since $\underset{\sim}{E}$ is then positive semidefinite. Fourth, although the passivity conditions on $\underset{\sim}{D}$ (and $\underset{\sim}{E}$) are known, those on $\underset{\sim}{B}$ and $\underset{\sim}{C}$ are not, except in the lossless case where $\underset{\sim}{B} = \underset{\sim}{\tilde{C}}$ is possible and an alternate synthesis applies to cover all cases [4] $\{\underset{\sim}{\mathfrak{J}} = \underset{\sim}{1}_n$ holds to yield a skew-symmetric $\underset{\sim}{Y}_c\}$.

An alternate and interesting method results from the following manipulation [5]. Let

$$\hat{\underset{\sim}{A}} = \underset{\sim}{\mathfrak{J}}\underset{\sim}{A}\underset{\sim}{\mathfrak{J}}^{-1} + \dot{\underset{\sim}{\mathfrak{J}}}\underset{\sim}{\mathfrak{J}}^{-1} \tag{IX-11a}$$

$$\hat{\underset{\sim}{B}} = \underset{\sim}{\mathfrak{J}}\underset{\sim}{B}, \quad \hat{\underset{\sim}{C}} = \underset{\sim}{C}\underset{\sim}{\mathfrak{J}}^{-1} \tag{IX-11b}$$

then from Eq. (IX-9c)

$$\begin{aligned} \hat{\underset{\sim}{A}}+\hat{\underset{\sim}{A}} &= -\underset{\sim}{\mathfrak{J}}^{-1}[\underset{\sim}{\mathfrak{J}}^2\underset{\sim}{B}-\underset{\sim}{C}][\underset{\sim}{D}+\underset{\sim}{\tilde{D}}]^{-1}[\underset{\sim}{\tilde{B}}\underset{\sim}{\mathfrak{J}}^2-\underset{\sim}{C}]\underset{\sim}{\mathfrak{J}}^{-1} \\ &= 2\underset{\sim}{\tilde{\hat{L}}}\underset{\sim}{\hat{L}} \end{aligned} \tag{IX-11c}$$

where $\underset{\sim}{\hat{L}}$ is defined as

$$\underset{\sim}{\hat{L}} = -\frac{1}{\sqrt{2}}(\underset{\sim}{D}+\underset{\sim}{\tilde{D}})^{-1/2}[\underset{\sim}{\tilde{B}}\underset{\sim}{\mathfrak{J}}^2-\underset{\sim}{C}]\underset{\sim}{\mathfrak{J}}^{-1} \tag{IX-11d}$$

If further we define

$$\underset{\sim}{z} = \left(\frac{\underset{\sim}{D}+\tilde{\underset{\sim}{D}}}{2}\right)^{1/2} = \tilde{\underset{\sim}{z}} \tag{IX-11e}$$

where the positive definite symmetric square root is again meant, we obtain

$$\dot{\underset{\sim}{s}} = \frac{1}{2}(\hat{\underset{\sim}{A}}-\tilde{\hat{\underset{\sim}{A}}})\underset{\sim}{s}+(\hat{\underset{\sim}{B}}+\hat{\underset{\sim}{L}}\underset{\sim}{z})\underset{\sim}{v}-\hat{\underset{\sim}{L}}\underset{\sim}{v}^* \tag{IX-12a}$$

$$\underset{\sim}{i} = \widetilde{(\hat{\underset{\sim}{B}}+\tilde{\hat{\underset{\sim}{L}}}\underset{\sim}{z})}\underset{\sim}{s}+\underset{\sim}{z}\underset{\sim}{v}^* \tag{IX-12b}$$

$$\underset{\sim}{i}^* = -\underset{\sim}{v}^* = -\hat{\underset{\sim}{L}}\underset{\sim}{s}-\underset{\sim}{z}\underset{\sim}{v} \tag{IX-12c}$$

Here direct substitution of the last constraint upon noticing that $2\underset{\sim}{z}\hat{\underset{\sim}{L}} = \hat{\underset{\sim}{C}}-\hat{\underset{\sim}{B}}$ yields the original set of equations

$$\dot{\underset{\sim}{s}} = \hat{\underset{\sim}{A}}\underset{\sim}{s}+\hat{\underset{\sim}{B}}\underset{\sim}{v}, \qquad \underset{\sim}{i} = \hat{\underset{\sim}{C}}\underset{\sim}{s}+\left[\frac{\underset{\sim}{D}+\tilde{\underset{\sim}{D}}}{2}\right]\underset{\sim}{v} \tag{IX-12d}$$

The constraint $\underset{\sim}{i}^* = -\underset{\sim}{v}^*$ corresponds to resistive loads at the $\underset{\sim}{v}^*$, $\underset{\sim}{i}^*$ ports. As a consequence we consider the coupling admittance matrix

$$\hat{\underset{\sim}{Y}}_c = \begin{bmatrix} \underset{\sim}{0} & \underset{\sim}{z} & -\tilde{\hat{\underset{\sim}{B}}}+\underset{\sim}{z}\hat{\underset{\sim}{L}} \\ -\underset{\sim}{z} & \underset{\sim}{0} & \tilde{\hat{\underset{\sim}{L}}} \\ \hat{\underset{\sim}{B}}+\tilde{\hat{\underset{\sim}{L}}}\underset{\sim}{z} & -\hat{\underset{\sim}{L}} & \frac{1}{2}(\tilde{\hat{\underset{\sim}{A}}}-\hat{\underset{\sim}{A}}) \end{bmatrix} \tag{IX-13}$$

which is skew-symmetric and hence realizable by gyrators. When loaded at the final ports by unit resistors and at the next to final ports by unit capacitors, the input admittance $\underset{\sim}{y}(t,\tau)$ occurs at the input ports. In this manner an alternate synthesis results when $\underset{\sim}{D}+\tilde{\underset{\sim}{D}}$ is nonsingular, for a passive $\underset{\sim}{y}(t,\tau)$. It should be observed that this method requires that the skew-symmetric part of $\underset{\sim}{D}$ must be extracted before Eqs. (IX-12) are considered, as seen from Eq. (IX-12d). Of course the skew-symmetric part of $\underset{\sim}{D}$ is obtained by gyrators connected in parallel with the input ports. Note that this again shows that all time-variations for time-variable circuits can be placed in the gyrators.

E. Discussion

Because the state-variable equations are expressed in the time domain they are primarily suited for obtaining syntheses of time-variable networks. Here we have investigated two types of synthesis, one for voltage transfer and the other for n-port admittance impulse responses.

Emphasis has been placed upon passive structures but it is clear that the same ideas can be applied to synthesis using active elements, perhaps in an even simpler manner. The transfer function synthesis contains relatively simple calculations while the solution of a nonlinear differential equation makes the admittance syntheses extremely difficult to carry out. Consequently one would hope for a simpler admittance synthesis and in fact one which relaxes the unnecessary constraint of a nonsingular symmetric part for $\underset{\sim}{D}$.

In the time-invariant case the methods yield, in general, circuits with time-variable components. In some instances these can be combined to obtain time-invariant components but the result does show that perhaps some other synthesis methods exist which reduce to the known time-invariant techniques perviously discussed. It is worth observing though that many of the previous concepts discussed only for time-invariant structures do extend to the time-variable situation. For example it seems relatively simple to set up a theory of equivalence for time-variable structures from the discussions in Chapter V.

Although the n-port synthesis techniques have been given in terms of admittances the classical synthesis methods in terms of scattering matrices can also be extended [6] [7] [8] though as yet these latter time-variable methods have not really applied the concepts of state-variable theory for their success.

As a point of philosophical interest we point out that the passive synthesis of Section C can be applied to non-stable network functions, such as $T = 1/(p-1)$. Consequently one can relatively easily construct passive unstable networks, a rather paradoxical situation when it is realized that many intuitive deductions concerning passive networks have rested upon the "stability" of passive structures.

F. References

1. Youla, D. C., "The Synthesis of Linear Dynamical Systems from Prescribed Weighting Patterns," Journal of SIAM, Vol. 14, May 1966, pp. 527-549.
2. Silverman, L. M., "Synthesis of Impulse Response Matrices by Internally Stable and Passive Realizations," submitted for publication.
3. Moore, J. B. and B. D. O. Anderson, "Extensions of Quadratic Minimization Theory Using a Covariance Condition," Technical Report No. EE-6704, Department of Electrical Engineering, University of Newcastle, Australia, July 1967.
4. Newcomb, R. W., "A Quasilossless Time-Variable Synthesis Suitable for Integrated Circuits," Microelectronics and Reliability, Vol. 7, 1968, to appear.
5. Anderson, B. D. O., "Synthesis of Passive Time-Variable Impedance Matrices," submitted for publication.
6. Saeks, R., "Synthesis of General Linear Networks," Cornell University Memorandum, July 1967.
7. Anderson, B. D. O., "Passive Time-Variable Scattering Matrix Synthesis," submitted for publication.
8. Newcomb, R. W., "Active Integrated Circuit Synthesis," Prentice-Hall, 1968.

G. Exercises

1. Synthesize by a passive structure the voltage transfer functions

   a) $T(p) = \dfrac{p+2}{(p+3)(p+1)}$

   b) $T(t,\tau) = t\tau^2 e^{-(t-\tau)} 1(t-\tau)$

2. Synthesize by the methods described the time-invariant admittance

$$y(p) = \frac{2p}{p+3}$$

From the result discuss various simplifications which can be made, or need to be made, in the theory.

3. Give a synthesis for time-invariant voltage transfer functions using ideas similar to those of Section C. For this one can choose any positive definite constant matrix $\underset{\sim}{V}$ and solve for $\underset{\sim}{\mathcal{J}}$ to yield Eq. (IX-5c).

4. Synthesize the voltage transfer function

$$T(p) = \frac{1}{p-1}$$

by the method of Section C. From the result discuss why a passive network need not be stable.

5. Discuss means of solving Eq. (IX-9c) for $\underset{\sim}{\mathcal{J}}$.

*6. Develop a state-variable synthesis of passive scattering matrices.

7. Extend the results of this chapter to nonpassive structures and discuss the meaning of your methods.

Nous vivons a côté de notre véritable vie
et nous sentons que nos pensées les
plus intimes et les plus profondes
même ne nous regardent pas, car nous
sommes autre chose que nos pensées
et que nos rêves. Et ce n'est qu'a certains
moments et presque par distraction que
nous vivons nous-mêmes.

M. Maeterlinck
"Les Avertis" du "Trésor des Humbles"

CONCLUSIONS

Paradoxically the simple expediant of introducing a set of first order differential equations to describe high order ones has led to the solution of previously unsolved problems, such as the determination of all equivalent active structures for a given network. As we have seen there are many areas where the ideas can be applied, perhaps with a possibility of gaining insight into the behavior of a system.

Thus, because most systems of practical significance possess an identifiable state, the state-variable equations give a general, or universal, means of observing systems. By keeping track of the solutions of the describing equations in state-variable form one can keep track of the behavior of the subparts of a system in orderly fashion. And because this tracking can be done orderly, the theory allows readily for the computer analysis of networks, this analysis having the possibility of proceeding in two ways, as we have seen in Chapter II in either the topological or capacitor extraction form. Once a computer analysis is set up in this manner the results can be used for other purposes than keeping a record of voltages and currents; for example Chapter VI has shown how a sensitivity analysis can proceed from a state-variable analysis program.

But the most striking uses of the theory occur when synthesis is considered. Here we have seen that minimal degree realizations, that is minimum reactive element circuits, result for general transfer functions by the theory of Chapter IV. Even though this latter is somewhat

abstract its significance should not be overlooked. Because of its form it allows convenient integrated circuit constructions as well as analog modeling for simulation and preliminary testing of designs. Also because of its algebraic form the realization technique allows for the complete computer design of a system, though as yet such a program remains to be carried out. In the area of classical multiport synthesis, Chapter VII has shown that the introduction of state-variables can lead to a contribution since a minimal resistor and minimal capacitor circuit results by application of the given method.

Still it is by way of generalization of the positive-real admittance synthesis where the most significant contributions of state-variable theory seem to be made. We have illustrated this in two different ways. The first is through the introduction of a second variable to allow for design with both lumped and distributed elements, as covered in Chapter VIII. The second generalization is that of Chapter IX for the synthesis of time-variable circuits. Though this latter is as yet not completely finished, to us it represents a beautiful application of the theory which in almost all parts is carried out in the time domain.

Once a circuit has been designed the material of Chapter V on equivalence shows how many other circuits, in fact almost all, with the same terminal behavior can be found. To complete the picture any of these can be, in turn, analyzed by the methods of Chapters I and II to check its performance.

In summary, the theory of state-variables has allowed an almost complete picture of the theory of networks, in fact within the larger framework of scientific systems. It has, however, raised many fascinating problems, some of which we have tried to point out along the way. Thus, though the theory may offer little to some people it can offer an immense amount to those who would allow it -- so is it with almost all that we meet.

> Quel jour deviendrons-nous ce que nous sommes?
> Nous nous écartions sans rien dire et nous
> comprenions tout sans rien savior.
>
> M. Maeterlinck
> "Les Avertis" du "Trésor du Humbles"

LIST OF PRINCIPAL SYMBOLS

$\underset{\sim}{A}$, state coefficient matrix....7

b, number of branches.....26

$\underset{\sim}{B}$, input-state matrix.....7

$\underset{\sim}{C}$, state-output matrix.....7

$\underset{\sim}{C}$, capacitance matrix.....21

cut set matrix.....27

$\underset{\sim}{D}$, canonical equation matrix...7

$\underset{\sim}{E}$, coefficient matrix.....7

g(p), least common denominator.....30

h, impulse response.....8

H, transfer function.....9

$\underset{\sim}{i}$, port currents.....27

$\mathcal{L}$[ ], Laplace transform.....9

ℓ, number of links.....26

m, input size.....4

n, output size.....4

$p = \sigma + j\omega$, frequency.....9

$\underset{\sim}{P}$, observability matrix.....64

PR lemma matrix.....96

Q, quality factor.....48

$\underset{\sim}{Q}$, controllability matrix.....64

R, realization.....7

resistance.....6

s, number of separate ports...26

$s_x^{p_k}$, pole position sensitivity.....86

$\underset{\sim}{s}$, state.....4

$S_x^{T(p)}$, sensitivity.....84

$\underset{\sim}{S}_r$, Hankel matrix.....62

t, number of tree branches....26

time.....3

t_o, initial time.....3

T, state transformation.....16

$\underset{\sim}{T}$[,], system transformation.....4

$\underset{\sim}{T}_r$, modified Hankel matrix.....115

$\underset{\sim}{\mathcal{T}}$, tie set matrix.....28

state transformation.....126

$\underset{\sim}{u}$, input.....3

$\underset{\sim}{U}$, factor of T_r.....115

$\underset{\sim}{U}_\ell^{-1}$, left inverse of $\underset{\sim}{U}$.....115

v, number of vertices.....26

$\underset{\sim}{v}$, port voltages.....27

$\underset{\sim}{V}$, transition energy form.....127

$\underset{\sim}{W}(p)$, para-Hermitian factor.....97

$\underset{\sim}{W}_r^{-1}$, right inverse of W.....97

$\underset{\sim}{y}$, output.....3

$\underset{\sim}{y}(t,\tau)$, admittance kernel.....131

$\underset{\sim}{Y}_c$, coupling admittance....20, 128

$\underset{\sim}{Y}_C$, symmetric coupling admittance.....119

$\underset{\sim}{Y}_g$, gyrator coupling matrix.....51

δ, impulse, = δ[ ].....9, 10

δ_λ, λ-degree = rank $\underset{\sim}{T}_r$....115, 116

λ, frequency variable.....111

$\underset{\sim}{\theta}$, zero state.....4

ω_n, undamped natural frequency..48

$\underset{\sim}{\Omega}_n$, companion matrix.....61, 115

$\underset{\sim}{0}$, zero matrix.....4

1(t), unit step.....9

$\underset{\sim}{1}_k$, k×k identity.....9

$\underset{\sim}{1}_{\rho,\gamma}$, partial identity matrix...62

$\dot{+}$, direct sum.....51

~, transpose.....23

•,o, compositions.....125

INDEX

Admittance matrix.....17
Canonical equation simulation.....50
Coupling.....20, 128
Kernel.....131
Synthesis.....99, 131, 133
Transmission line.....110
Branch.....25
Brune section.....11
Canonical equations..13, 24
Equivalents.....73
Canonical Representation.....7
Block diagram.....44
Capacitor extraction form.....22
Degree two.....48
Equations.....7, 15
Formulation.....19
General network form.....36
Scaled form.....45
Time-variable.....126
Topological derivation...25
Transformation of.....16
Transformation to.....39
Capacitor extraction.....20
Companion matrix.....61
Composition.....125
Computer use.....24
Controllability.....74
Matrix.....64
Controlled source equivalent..41
Coupling admittance.....20
Synthesis use...95, 109 , 128
Current source replacement.....30
Cut set.....27
Degree.....10
Relation to Hankel matrix.....63, 64
Degree two realization.....48
Differential amplifier.....46
Differential system.....7
Distributional kernel.....8
Duality of systems.....76
Equivalent controlled sources...41
Equivalence transformation.....72
Equivalent realizations.....16, 71
Nonminimal.....77
Finite system.....7
Frequency equivalents.....113
Fundamental decomposition.....5
General description.....20
Graph.....25
Gyrator.....12
Hankel matrix.....62
Modified.....115
Hazony section.....18
Identity matrix.....9
Impulse response.....8
Differential system form..125
Integrator.....6, 47
Kernel.....8
Synthesis.....124
Kirchhoff's current law.....27

Kirchhoff's voltage law..28
Lambda degree.....115, 116
Linear system.....5
Link.....25
Lossless
Admittance.....96
Two-variable matrix.....112
Lumped-distributed synthesis.110
Minimal realization.....10
Creation.....57
Example.....65
Result.....63
Two-variable.....114
Network.....10, 17
Graph.....25
Node.....25
Nonminimal equivalents.....77
Observability.....75
Matrix.....64
Passive synthesis
PR matrices.....109
Time-variable.....127, 131
Two-variable lossless...114
Positive-real
Definition.....95
Example synthesis.....103
Lemma.....96
Lossless.....96
Synthesis.....100, 109
Two-variable.....112
Quality factor.....48
Realization.....7
Equivalent.....16
Frequency dependent.....114
Minimal.....10, 63
Positive-real.....100
Reciprocal 2-variable
synthesis.....119
Riccati equation.....131
Sensitivity
Computer evaluation.....85
Definition.....84
Pole position.....86
Time-domain.....88
State
Block diagram.....44
Computer programming.....24
Definition.....4
Equations.....7
Equivalence.....73
Intuitive definition.....1
Mathematical definition.....4
Summary.....15
Time-variable network.....124
Topological formulation....25
Transformation....16, 39, 126
Uses.....3
Zero.....4
State-variable equations....7, 124
Minimal form.....63
Skew-symmetric part.....51
Symmetric part.....51
Symmetrization.....118
Tie set.....28
Time-invariant system.....7
Time-variable synthesis.....124
Topological formulation.....25
Results.....35

Transfer function.....9
Synthesis.....127
Transition matrix.....89
Sensitivity use.....88
Transmission line.....110
Transpose.....23
System.....76
Tree.....25
Two-variable
PR.....112
Synthesis.....116
Unit-element.....112
Zero state.....4
Examples.....5

No más, sino que Dios te guarde,
y á mí me dé paciencia para
llevar bien el mal que han de
decir de mí mas de cuatro
sotiles y almidonados-Vale.

M. de Cervantes, "Novelas Ejemplares,"
M. Alvarez, Cadiz, 1916, p. 6

AFOSR,
under Contract/Grant F44620-67-C-0001

Security Classification

DOCUMENT CONTROL DATA – R & D

(Security classification of title, body of abstract and indexing annotation must be entered when the overall report is classified)

1. ORIGINATING ACTIVITY (Corporate author)

Stanford University
Electrical Engineering
Stanford, California 94305

2a. REPORT SECURITY CLASSIFICATION

UNCLASSIFIED

2b. GROUP

3. REPORT TITLE

NETWORK THEORY: THE STATE-SPACE APPROACH

4. DESCRIPTIVE NOTES (Type of report and inclusive dates)

Scientific Interim

5. AUTHOR(S) (First name, middle initial, last name)

Robert W. Newcomb

6. REPORT DATE

December 1968

7a. TOTAL NO. OF PAGES

142

7b. NO. OF REFS

52

8a. CONTRACT OR GRANT NO.

F44620-67-C-0001

b. PROJECT NO.

9749-01

c. 6144501F

d. 681304

9a. ORIGINATOR'S REPORT NUMBER(S)

9b. OTHER REPORT NO(S) (Any other numbers that may be assigned this report)

AFOSR 68-0006TR

10. DISTRIBUTION STATEMENT

1. This document has been approved for public release and sale; its distribution is unlimited.

11. SUPPLEMENTARY NOTES

TECH, OTHER

12. SPONSORING MILITARY ACTIVITY

Air Force Office of Scientific Research (SRMA)
1400 Wilson Boulevard
Arlington, Virginia 22209

13. ABSTRACT

This report contains a set of lectures presented as a final year one semester course at L'Universite Catholique de Louvain in 1967-1968. The material presentes network theory from a state space approach. The topics covered include introduction to the state, the state-intuitively, formulation of canonical equations, integrated and anolog circuit configurations, minimal realization creation, equivalence, controllability and observability, sensitivity and transition matrices, positive-real admittance synthesis, lumped-distributed lossless synthesis, and time variable synthesis. Appropriate exercises are presented at the end of each chapter.

DD FORM 1 NOV 65 1473

Security Classification