FTD-HT-23-1450-67

AD 681393

# FOREIGN TECHNOLOGY DIVISION

APPARATUS AND MACHINERY OF OXYGEN PLANTS
(SELECTED ARTICLES)

D D C
FEB 5 1969
RECEIVED
C

Distribution of this document is unlimited. It may be released to the Clearinghouse, Department of Commerce, for sale to the general public.

Reproduced by the
CLEARINGHOUSE
for Federal Scientific & Technical
Information Springfield Va 22151

60

ACCESSION for
CFSTI WHITE SECTION ☑
DDC BUFF SECTION ☐
UNANNOUNCED ☐
JUSTIFICATION
BY
DISTRIBUTION/AVAILABILITY CODES
DIST. AVAIL. and/or SPECIAL
1

This translation was made to provide the users with the basic essentials of the original document in the shortest possible time. It has not been edited to refine or improve the grammatical accuracy, syntax or technical terminology.

FTD-HT- 23-1450-67

# UNEDITED ROUGH DRAFT TRANSLATION

APPARATUS AND MACHINERY OF OXYGEN PLANTS (SELECTED ARTICLES)

English pages: 52

SOURCE: Vsesoyuznyy Nauchno-Issledovatel'skiy Institut Kislorodnogo Mashinostroyeniya. Trudy (All-Union Scientific Research Institute of Industrial Oxygen Apparatus Construction. Transactions). No. 4, 1961, pp. 38-86.

Translated under: Contract F33657-67-C-1452

UR/2800-61-000-004

TT8000640-642

| | |
|---|---|
| THIS TRANSLATION IS A RENDITION OF THE ORIGINAL FOREIGN TEXT WITHOUT ANY ANALYTICAL OR EDITORIAL COMMENT. STATEMENTS OR THEORIES ADVOCATED OR IMPLIED ARE THOSE OF THE SOURCE AND DO NOT NECESSARILY REFLECT THE POSITION OR OPINION OF THE FOREIGN TECHNOLOGY DIVISION. | PREPARED BY: TRANSLATION DIVISION FOREIGN TECHNOLOGY DIVISION WP-AFB, OHIO. |

FTD-HT - 23-1450-67

Date 4 Mar 1968

S

## DATA HANDLING PAGE

| 01-ACCESSION NO. | 98-DOCUMENT LOC | 39-TOPIC TAGS |
|---|---|---|
| TT8000640 | | air breathing engine, alternating current, antifriction bearing, engine crankshaft, engine cylinder, feed mechanism, liquid oxygen, lubricant, pump/(U)NZhK7 liquid oxygen pump, (U)BR5 air separating apparatus |
| 09-TITLE THE NZhK-7 LIQUID-OXYGEN PUMP | | |
| 47-SUBJECT AREA 13, 21 | | |

| 42-AUTHOR/CO-AUTHORS | 10-DATE OF INFO |
|---|---|
| MIROSLAVSKAYA, YU. A. | -----61 |
| 43-SOURCE VSESOYUZNYY NAUCHNO-ISSLEDOVATEL'SKIY INSTITUT KISLORODNOGO MASHINOSTROYENIYA. TRUDY (RUSSIAN) | 68-DOCUMENT NO. FTD-HT-23-1450-67 |
| | 69-PROJECT NO. 72301-78 |

| 63-SECURITY AND DOWNGRADING INFORMATION | 64-CONTROL MARKINGS | 97-HEADER CLASN |
|---|---|---|
| UNCL, 0 | NONE | UNCL |

| 76-REEL/FRAME NO. | 77-SUPERSEDES | 78-CHANGES | 40-GEOGRAPHICAL AREA | NO. OF PAGES |
|---|---|---|---|---|
| 1884 0805 | | | UR | 5 |
| **CONTRACT NO.** | **X REF ACC. NO.** | **PUBLISHING DATE** | **TYPE PRODUCT** | **REVISION FREQ** |
| 94-00 | 65- | | Translation | NONE |

| STEP NO. | ACCESSION NO. |
|---|---|
| 02-UR/2800/61/000/004/0038/0042 | TT8000640 |


ABSTRACT

The NZhK-7 liquid-oxygen pump is designed to feed dry gaseous industrial oxygen obtained by means of the BR-5 apparatus directly into cylinders at 165 gage atmospheres.

The pump operates with supercooled liquid.

Figure 1 is a schematic diagram showing how the NZhK-7 pump is connected to the separation unit of the BR-5 air separating apparatus.

The NZhK-7 pump is a one-line horizontal machine of the plunger type (Fig. 2).

The stainless steel plunger (Fig. 3) is guided in M20 or 15E-S graphite bushings, which have good antifriction properties.

The NZhK-7 pump was tested on the test stand of the VNIIKIMASh for 115 hours, during 100 of which the pump operated at a pressure of 165 gage atmospheres; it had a delivery coefficient of not less than 0.75.

## DATA HANDLING PAGE

| 01-ACCESSION NO. | 98-DOCUMENT LOC | 39-TOPIC TAGS |
|---|---|---|
| TT8000641 | | bushing, compressor design, compressor rotor, engine oil pump, gas dynamics, lubrication technique, turbine cooling, turbine compressor /(U)KTK7 oxygen turbocompressor |
| 09-TITLE THE KTK-7 OXYGEN TURBOCOMPRESSOR | | |
| 47-SUBJECT AREA 13, 21 | | |

| 42-AUTHOR/CO-AUTHORS | 10-DATE OF INFO |
|---|---|
| 16- GORSHKOV, A. M.;GRUSHEVSKIY, V. M. | ------61 |
| 43-SOURCE VSESOYUZNYY NAUCHNO-ISSLEDOVATEL'SKIY INSTITUT KISLORODNOGO MASHINOSTROYENIYA. TRUDY (RUSSIAN) | 68-DOCUMENT NO. FTD-HT-23-1450-67 |
| | 69-PROJECT NO. 72301-78 |

| 63-SECURITY AND DOWNGRADING INFORMATION | 64-CONTROL MARKINGS | 97-HEADER CLASN |
|---|---|---|
| UNCL, 0 | NONE | UNCL |

| 76-REEL/FRAME NO. | 77-SUPERSEDES | 78-CHANGES | 40-GEOGRAPHICAL AREA | NO. OF PAGES |
|---|---|---|---|---|
| 1884 0806 | | | UR | 22 |

| CONTRACT NO. | X REF ACC. NO. | PUBLISHING DATE | TYPE PRODUCT | REVISION FREQ |
|---|---|---|---|---|
| 94-00 | 65- | | Translation | NONE |

| STEP NO. | ACCESSION NO. |
|---|---|
| 02-UR/2800/61/000/004/0043/0064 | TT8000641 |


ABSTRACT

Piston compressors with such output values are rather, cumbersome and heavy machines. To ensure reliable oxygen operation, the piston group is lubricated with a soap emulsion, and this creates certain difficulties in the operation of the machine.

The replacement of piston compressors with turbo-compressors of greater output capacity reduces the initial costs and the operating costs, simplifies maintenance, and provides better opportunities for complex automation. The dimensions and weight of turbocompressors are much smaller than those of piston compressors.

In the design of the compressor, considerable attention was given to the problems of stable compressor operation. Experience in the adjusting of turbomachines designed by the Institute showed that if the ratio of the operational number of revolutions per minute to the first critical value exceeds 1.8-1.9, there may be self-oscillations of the rotor, i.e., oscillations close to its first characteristic frequency. Such oscillations often make machine operation erratic, lead to jamming in the labyrinth packings and unreliable functioning of the bearings, and sometimes even lead to breakdown. For this reason, in those turbines which the VNIIKIMASh designs with flexible shafts, for stabiliazation of the rotor rotation, one of the bearings is equipped with a specially designed elastic-damping support and this eliminates self-oscillations when the machine is adjusted.

**DATA HANDLING PAGE**

| 01-ACCESSION NO. | 02-DOCUMENT LOC | 03-TOPIC TAGS |
|---|---|---|
| TT8000642 | | bushing, compressor stage, compressive stress, engine cylinder, engine oil pump, metallurgic plant, oxygen, piston engine, vacuum pump/(U)KPK-6 piston oxygen compressor |
| 09-TITLE THE KPK-6 PISTON-TYPE OXYGEN COMPRESSOR | | |
| 47-SUBJECT AREA 13, 21 | | |

| 42-AUTHOR/CO-AUTHORS | 10-DATE OF INFO |
|---|---|
| 16- ALEKSEYEV, L. A.; BUTKEVICH, K. S. | -----61 |
| 43-SOURCE VSESOYUZNYY NAUCHNO-ISSLEDOVATEL'SKIY INSTITUT KISLORODNOGO MASHINOSTROYENIYA. TRUDY (RUSSIAN) | 68-DOCUMENT NO. FTD-HT-23-1450-67 |
| | 69-PROJECT NO. 72301-78 |

| 63-SECURITY AND DOWNGRADING INFORMATION | 64-CONTROL MARKINGS | 97-HEADER CLASN |
|---|---|---|
| UNCL, 0 | NONE | UNCL |

| 76-REEL/FRAME NO. | 77-SUPERSEDES | 78-CHANGES | 40-GEOGRAPHICAL AREA | NO. OF PAGES |
|---|---|---|---|---|
| 1884 0807 | | | UR | 25 |
| **CONTRACT NO.** | **X REF ACC. NO.** | **PUBLISHING DATE** | **TYPE PRODUCT** | **REVISION FREQ** |
| 94-00 | 65- | | Translation | NONE |

| STEP NO. | ACCESSION NO. |
|---|---|
| 02-UR/2800/61/000 /004/0065/0086 | TT8000642 |


ABSTRACT

Piston-type compressors with unlubricated packing and, in particular, with graphite piston packing have recently come into increasingly widespread use both in Soviet and in foreign industry.

The reason for this is that the use of such compressors makes it possible to supply the consumer with compressed gas uncontaminated by any lubricant.

The following conclusions may be drawn from the results of the tests performed on the KPK-6 compressor: 1) The operation of the graphite piston packings may be considered satisfactory; the amount of gas leaking through the piston rings was less than 0.5%; the wear of the compressor piston rings in air operation after 100 hr was 0.07 to 0 09% and in oxygen operation after 100 hr approximately 0.5%. With this wear value, we may assume that the service lifetime of the piston rings will be 4000-6000 hr. 2) The good operation of the piston packings and valves, as well as the samll amount of dead volume, made it possible to obtain a high delivery coefficient. 3) The high wear of the guide rings is attributable to the axial misalignment of the pistons and cylinders. The hinge joints supplied for joining the piston rods to the pistons did not adequately compensate the axial misalignment between the cylinders and the pistons. 4) A compressor with graphite packings requires greater care in fabrication than compressors with metal piston rings. 5) The operation of self-expanding band valves in the compressor was satisfactory; during the test period we observed no breaks in the plates, no appreciable wear of their limiters or of the plates themselves; the

tightness of the valves was also within the range of the acceptable standards. 6) For compressors with a delivery pressure of 16 atm abs or higher, we may recommend 2P-1000 graphite, which showed good resistance to wear. However, it is highly rigid and brittle, so that it is difficult to work.

For compressors with a delivery pressure of up to 10 atm abs, we may recommend brands D and Ye graphites of the Electrode Plant, which are less brittle and are more easily worked, and which are also much less expensive than 2P-1000 graphite.

TABLE OF CONTENTS:

Miroslavskaya, Yu.A., The NZhK-7 Liquid-Oxygen Pump..... 1

Gorshkov, A.M., Grushevskiy, V.M., The KTK-7 Oxygen Turbocompressor..... 6

Alekseyev, L.A., Butkevich, K.S., The KPK-6 Piston-Type Oxygen Compressor..... 28

# THE NZhK-7 LIQUID-OXYGEN PUMP

Yu.A. Miroslavskaya, Engineer

The NZhK-7 liquid-oxygen pump is designed to feed dry gaseous industrial oxygen obtained by means of the BR-5 apparatus directly into cylinders at 165 gage atmospheres.

The pump operates with supercooled liquid.

Figure 1 is a schematic diagram showing how the NZhK-7 pump is connected to the separation unit of the BR-5 air-separating apparatus.

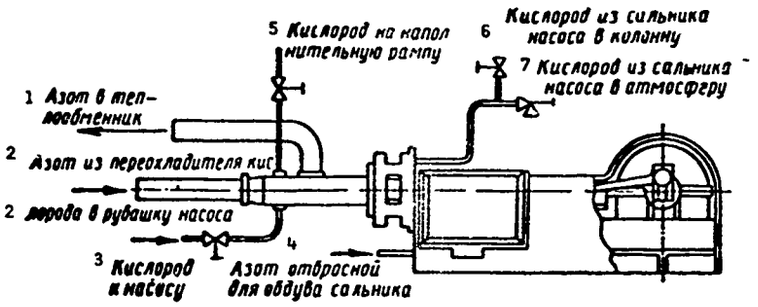


Fig. 1. Schematic diagram showing how the NZhK-7 pump is connected to the air-separation unit of the BR-5 oxygen apparatus of the VNIIKIMASh. 1) Nitrogen to heat exchanger; 2) nitrogen from oxygen supercooler to pump jacket; 3) oxygen to pump; 4) waste nitrogen for blowing out the gland; 5) oxygen to charging ramp; 6) oxygen from pump gland to column; 7) oxygen from pump gland to atmosphere.

The NZhK-7 pump is a one-line horizontal machine of the plunger type (Fig. 2).

The stainless steel plunger (Fig. 3) is guided in M20 or 15E-S graphite bushings, which have good antifriction properties.

At the cold end the plunger is sealed with a gland consisting of alternating rings of graphited fibrous lead 4 and loose lamellar graphite 5, which serves as a lubricant. The gland is kept tight by means of a threaded collar 6 situated at the hot end, through the housing 3 of the gland, the intermediate bushing 7, the connector 8, and the guide bushing 2.

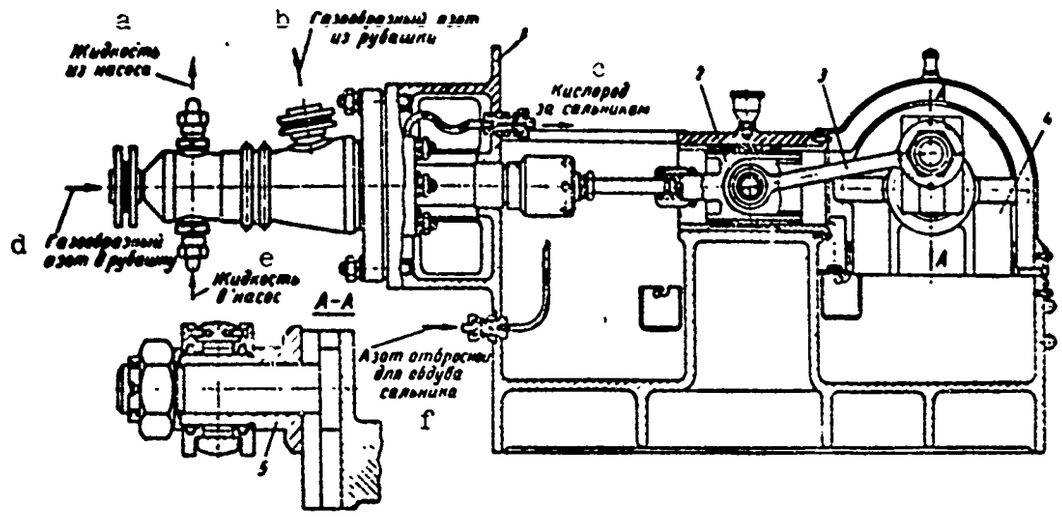


Fig. 2. The NZhK-7 liquid-oxygen pump: 1) frame of pump; 2) cross-head; 3) connecting rod; 4) worm reducer; 5) crank pin. a) Liquid from pump; b) gaseous nitrogen from jacket; c) oxygen after gland; d) gaseous nitrogen to jacket; e) liquid to pump; f) waste nitrogen for blowing out the gland.

At the hot end there is a small lead-graphite gland 9, which prevents the escape of the oxygen that gets through the main gland.

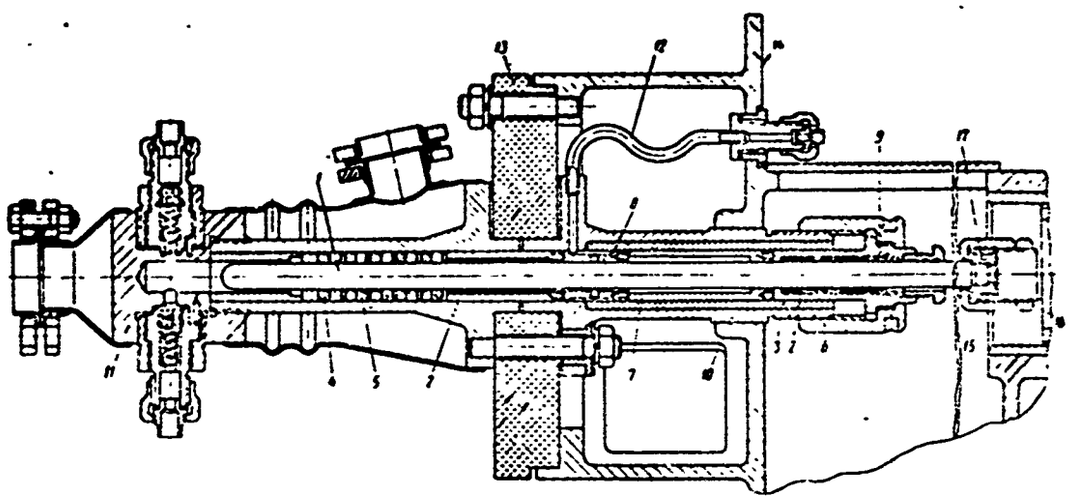

Fig. 3. Cylinder group of the NZhK-7 oxygen pump: 1) plunger; 2) guide bushing; 3) gland housing; 4) seal ring; 5) lamellar graphite; 6) threaded collar; 7) intermediate bushing; 8) connector; 9) lead-graphite gland; 10) cylinder; 11) pump cap; 12) pipe for removing oxygen into atmosphere; 13) textolite insulating plate; 14) frame of pump; 15) threaded collar; 16) lock nut; 17) calibrated ring.

At the hot end the cylinder 10, the housing 3 of the gland, and the intermediate bushing 7 are made of stainless steel in order to reduce the flow of heat from outside to the operating part of the pump cylinder group. For the same reason, the cap 11 of the pump and the cylinder have gaseous nitrogen from the supercooler flowing past them.

The oxygen which leaks through the gland is removed from the cavity formed by the connector through the pipe 12 into the atmosphere or into a rectifying column.

The valve labeled "oxygen to atmosphere" is opened only when it becomes necessary to check the operation of the gland, and at such times the valve labeled "oxygen to column" is closed. The operation of the gland can be evaluated on the basis of the amount of oxygen escaping from the pipe.

The intake valve and the feed valve are situated in the cylinder cap, and their construction is of the thimble type: the valve seat is made of LZhMts 59-1 brass, and the thimble is made of 1Kh18N9 stainless steel.

The pump cylinder group is fastened to the pump frame by means of pins, through a textolite insulating plate, and the crank pin-connecting rod group is also mounted on the frame.

The front panel of the frame is attached to the housing of the separation unit nn such a way that the cylinder group is inside the housing and the crank pin-connecting rod group is outside.

The pump is driven by an alternating-current motor through a worm gear reducer with a gear ratio of 15.5.

The electric motor is placed horizontally and is connected by means of a pin clutch directly to the shaft of the worm gear reducer.

The reducer is constructed with its shafts placed horizontally and mounted in antifriction bearings.

The shaft of the worm gear acts at the same time as a bearing shaft, which simplifies the grouping and reduces the size of the pump. For convenience in assembling, the crank pin is removable, so that when the pump is assembled, any crank radius smaller than 50 mm can be used.

The gears and bearings of the reducer are lubricated by the splashing of oil poured into the reducer housing.

To ensure normal reducer operation at ambient temperatures of up to +50°C, a helical-type water cooler is placed in the lower part of the reducer housing.

Motion is transmitted from the reducer crank shaft to the crosshead of the pump by a connecting rod which has needle bearings at its upper and lower ends. The rod and crosshead are joined

by means of a threaded collar 15 and a lock nut 16 through a calibrated ring 17 in such a way as to ensure a guaranteed space of 0.1 mm between the nut screwed onto the front of the plunger and the front of the crosshead; the presence of this space enables the plunger to adjust itself along the graphite guide bushings.

The crank pin-connecting rod group is shielded by a cast aluminum alloy guard.

The elements of the crank pin-connecting rod group are lubricated in the following manner.

Machine oil S (All-Union State Standard 1707-51) is poured into the reducer housing through the opening for the lubrication of the gears and bearings; the oil is completely changed once a month.

The crosshead is lubricated with UTV grease (grease 1-13, All-Union State Standard 1631-52) by means of a cap oiler. The same lubricant is applied liberally to the upper and lower ends of the connecting rod during assembly. The needle bearings are lubricated every 4 months.

The NZhK-7 pump was tested on the test stand of the VNIIKIMASh for 115 hours, during 100 of which the pump operated at a pressure of 165 gage atmospheres; it had a delivery coefficient of not less than 0.75.

**Technical Characteristics of Pump**

| | |
|---|---|
| Kind of liquid pumped | Supercooled liquid oxygen |
| Output of pump (averaged over the time required to fill cylinders to 165 gage atmospheres, with a stroke length of 80 mm), in liters/hr | 90 |
| Maximum feed pressure, in atmospheres | 165 |
| Number of complete (back-and-forth) strokes per minute | 90 |
| Operating stroke of plunger, mm | 80 |
| Diameter of plunger, mm | 20 |
| Gear ratio of reducer | 15.5 |
| Weight of pump and electric motor, in kg | 215 |
| Alternating-current motor, type AO-42-4-$Sh_2$ | 2.8 kw; 1420 rpm; 220/380 v. |

For countries with a tropical climate, the pump is equipped with an AO-42-4-T motor (2.8 kw, 1420 rpm, 400 volts).

The direction of rotation of the motor is clockwise as the motor is viewed from the direction of the front bearing.

| Manuscript Page No. | Transliterated Symbols |
|---|---|
| 1 | НЖК = NZhK = nasos zhidkogo kisloroda = liquid-oxygen pump |
| 1 | БР = BR = blok razdeleniya = separation unit |
| 1 | ВНИИКИМАШ = VNIIKIMASh = Vsesoyuznyy nauchno-issledovatel'skiy institut kislorodnogo mashinostroyeniya = All-Union Scientific Research Institute of Oxygen Machinery Construction |

# THE KTK-7 OXYGEN TURBOCOMPRESSOR

Engineer A.M. Gorshkov, Engineer V.M. Grushevskiy

During the years 1950-1955 the VNIIKIMASh produced oxygen turbocompressors of the KTK-12.5 type, which had an output of 12,000-13,000 $m^3$/hr and a pressure of 28 atmospheres. The VNIIKIMASh was then given the problem of producing an oxygen turbocompressor with a pressure of about 16 atmospheres, designed for feeding oxygen into open-hearth furnaces. Somewhat earlier, two-stage piston compressors with an output of 3500 $m^3$/hr and a design pressure of up to 16 atmospheres had been produced for this purpose.

Piston compressors with such output values are rather cumbersome and heavy machines. To ensure reliable oxygen operation, the piston group is lubricated with a soap emulsion, and this creates certain difficulties in the operation of the machine.

The replacement of piston compressors with turbocompressors of greater output capacity reduces the initial costs and the operating costs, simplifies maintenance, and provides better opportunities for complex automation. The dimensions and weight of turbocompressors are much smaller than those of piston compressors.

The design data specified for the turbocompressor were the following:

| | |
|---|---|
| Volumetric output capacity in terms of oxygen at $t$ = 20°C, $p$ = 760 mm Hg, in $m^3$/hr | 7000 |
| Final pressure, $p_k$, in absolute atmospheres | 11-13 |
| Initial pressure, $p_n$, in absolute atmospheres | 1 |
| Average initial temperature of oxygen at inlet, $t_n$, in °C | 25 |
| Maximum oxygen temperature at inlet, in °C | 35 |
| Final temperature of compressed and cooled oxygen, $t_k$, in °C | 13-15 |
| Purity of oxygen,* in % | Not more than 96 |
| Average relative humidity of oxygen, in % | 30 |
| Temperature of cooled water in summer, $t_w$, in °C | 40 |
| Same during cold season, in °C | 17 |
| Temperature of cooled water for second final cooler, in °C | 8 |
| Amount of cooling water at a temperature of 8°, in $m^3$/hr | 4 |
| Temperature in the plant, in °C | Up to 50 |

This technical problem was formulated for the climatic conditions of the metallurgical combine at Bhilai (India), but the achievement of a compression factor of about 16 under the climatic conditions of the USSR ($t_n = t_w = 20°$) had to be taken into consideration.

A final gas temperature of 13-15° and a temperature of 8° in the cooling water for the second final cooler, with a water flow rate of up to 4 $m^3$/hr, were specified on the basis of the condition that a moisture content of not more than 1 g/$m^3$ in the oxygen had to be achieved.

Later the allowable water content in the compressed and cooled oxygen was increased to 4 g/$m^3$, and as a result it became possible to allow a higher oxygen temperature at the outlet of the cooler and, accordingly, to accept a higher water temperature (up to 20°) in the additional final cooler.

The main design difference between this turbocompressor and the one produced earlier (the KTK-12.5) is that two-coil outlets are used in every stage except the last. The outer diameters and the profiles of the vanes of the rotors are much the same in the KTK-7 turbocompressor as in the KTK-12.5.

The eight compression stages are housed in two casings arranged in series, four stages in each casing.

The compressor rotates at 13,640 rpm.

The relative width of the rotors in the second casing is unfavorable from the standpoint of gasdynamic parameters. In the present case there are two solutions: either to use pump-type rotors, on the basis of the experience acquired at the Neva "Lenin" Plant, as more favorable with respect to the value of the relative width at the outlet, i.e., the quantity $b_2/D_2$, or to manufacture two-casing machines with different numbers of revolutions per minute. However, since time was short and since relatively good parameters had been achieved with the KTK-12.5 turbocompressor, it was decided to adopt the simpler solution of manufacturing machines with the same number of revolutions per minute and using rotors of the ordinary compressor type.

## BASIC DESIGN CONDITIONS

The gas-dynamics design of the turbocompressor was carried out according to the usual method. On the basis of general considerations and available operating experience, values were adopted for the subtropical efficiencies of the individual group and for the relative losses for disk friction and overflow.

On the basis of the selected rotor diameters and the specified number of revolutions per minute, we found the compression factor for the individual group and the amount of work required.

The angles of inclination of the rotor vanes at the outlet, as in previous VNIIKIMASh turbocompressor designs, were kept

small: 40-41° in the first group and 38° in the subsequent groups. The angles at the inlet essentially corresponded to the value $\tan \beta_1 = \frac{c_{1r}}{u_1}$, i.e., small positive or negative angles of attack were used, with complete retention of the vane profile within the limits of one group.

In keeping with usual practice, the number of vanes on the rotors was taken to be small (16); this does not contradict either Eckert's formula or Stodola's formula, and it likewise does not contradict Pfleiderer's formula for centrifugal pumps. The circular velocity at the rim of the rotors of the first group is 271 m/sec. The value of the dimensionless quantity $\overline{M}$, determined from the absolute velocity at the outlet of the rotor,

$$\overline{M}_{c_2} = \frac{c_2}{\sqrt{gRT_2}} = 0{,}6$$

and from the circular velocity of the rotor,

$$\overline{M}_{u_2} = \frac{u_2}{\sqrt{gRT_2}} = 0{,}965$$

is found to be within the allowable limits and gives no cause to expect a reduction of efficiency or a very steep characteristic.*

As indicated, the compressor was designed as a dual-diffuser machine. Thus, in each stage the gas from the rotor passes to two open half-coils which act as gas collectors, with transformation of the velocity energy in two rectilinear conical diffusers. Only the last stage has a complete coil and one diffuser.

The outlet cross section of the coil was designed by graphical integration according to the rule $rc_u$ = const. The linear value of the integral was determined from the calculated volumetric flow rate with the parameters at the outlet of the rotor,

$$\int \frac{b}{r}\, dr = \frac{Q_p \cdot 10^3}{k_{v_2} K},$$

where $Q_p$ is the calculated volumetric flow rate before the group, in $m^3$/sec; $k_{v_2}$ is the ratio of specific volumes – the initial specific volume and the specific volume at the outlet of the rotor; $K = r_2 c_{u_2}$ at the outlet of the rotor, in $m^2$/sec.

The remaining coil cross sections were selected in accordance with the corresponding fraction of the flow rate. The calculated compression factor at the outlet of the compressor discharge nozzle, $p_k/p_n$, for an initial gas temperature of 25° and an average cooling-water temperature of 30°, was found to be 13.4. For a gas temperature of 35° and a water temperature of 40° it was found to be approximately 12.6.

In the design of the compressor, considerable attention was

given to the problems of stable compressor operation. Experience in the adjusting of turbomachines designed by the Institute showed that if the ratio of the operational number of revolutions per minute to the first critical value exceeds 1.8-1.9, there may be self-oscillations of the rotor, i.e., oscillations close to its first characteristic frequency. Such oscillations often make machine operation erratic, lead to jamming in the labyrinth packings and unreliable functioning of the bearings, and sometimes even lead to breakdown. For this reason, in those turbines which the VNIIKIMASh designs with flexible shafts, for stabilization of the rotor rotation, one of the bearings is equipped with a specially designed elastic-damping support, and this eliminates self-oscillations when the machine is adjusted.

The oscillations which do occur, synchronous with the number of revolutions per minute, present no danger if the rotor is suitably balanced.

## DESIGN OF THE KTK-7 TURBOCOMPRESSOR

As was mentioned earlier, the turbocompressor (Fig. 1a and b) is a two-casing machine with external cooling, without deflectors, with spiral gas outlets after each stage, and with external admission of the gas from one stage to the next.

The intermediate cooling of the gas is carried out after every two stages, in three pairs of remote gas condensers situated on both sides of the machine.

The rotors are made of type 2Kh13 stainless steel, with an admixture of 1-1.5% Ni and 0.2-0.3% Mo to obtain the necessary stable mechanical properties. The vanes are machined at the same time with the main disks. The covering disks are attached with rivets which pass through the body of the vanes. The shafts are made of 2Kh13 steel.

The casings are made of cast iron, with a joint in the horizontal plane, and are supported on cast-iron base plates by means of bearing chambers cast at the same time with the lower parts of the casings.

The bearing bushings are made of cast iron and are lined with Babbitt metal. In each casing, one of the bearings is a support bearing and the other is a support-thrust bearing with self-adjusting shoes. The thrust bearing absorbs small axial forces, since the rotors are largely relieved of such forces by the fact that the rotor input funnels are arranged in opposite directions.

The bushings of the support bearings rest on specially designed elastic-damping supports which eliminate the possibility of dangerous oscillation. Forced circulating lubrication is used on the bearings.

The compressor has internal and terminal labyrinth packing constructed in the form of thin nickel rings calked into the grooves of the rotor.

The gas leaking through the terminal packings of each casing is removed from the intermediate chambers into a common collector connected to the intake pipe of the machine.

Nitrogen is blown past the terminal packings in order to prevent the entry of oil into the machine and also to prevent the entry of pure oxygen from the labyrinths into the zone of the bearing chambers.

The intermediate gas condensers of the first two groups of rotors are mounted pairwise in a single unit.

The compressor is equipped with a terminal gas condenser and moisture separator to dry the oxygen.

In cases where the temperature of the cooling water is unusually high, an additional terminal cooler supplied with specially cooled water is used to make the gas sufficiently dry.

The gears of the reducing and multiplying gear train are made with two-sided helical teeth. The bearings are made of cast iron and lined with Babbitt metal. The bearings and the gears are lubricated with forced circulating lubrication from the common oil system.

A gear-type oil pump, driven by the shaft of the low-speed wheel, is built into the reducer.

The turbocompressor is driven by an STM-1500-2 synchronous electric motor with a power of 1500 kw and a rotation rate of 3000 rpm.

The shafts of the compressor, the reducer, and the electric motor are connected by means of toothed clutches.

The turbocompressor is equipped with instruments and devices designed for automatic starting and stopping from a button on the control panel. For this purpose all the equipment involved in starting and stopping is electrically driven.

Regulation and the maintenance of constant pressure are achieved by an intake throttle combined with a return of the excess gas into the intake line by means of an antisurge device.

The compressor is equipped with systems to protect against a shortage of lubricant or cooling water, unacceptable temperature increases at the bearings, and unacceptable axial displacement of the rotors. In addition, the compressor is equipped with a fast-acting gate to close the intake pipe, actuated by special sensors, which prevents the entry of additional oxygen into the machine and admits nitrogen in case of fire. For additional safety of operation, nitrogen is used both for starting and for stopping the turbocompressor. The conversion from nitrogen to oxygen after starting and the conversion from oxygen to nitrogen upon stopping are also carried out automatically as a part of the general automatic start-and-stop complex.

The automatic control system is so designed that after the turbocompressor has been halted by means of the control panel button, the starting button is automatically unlocked and a light goes on to indicate that the machine may be started again. If the power circuits of the electric motor have been deenergized at the substation, the electric power is automatically disconnected from the control panel.

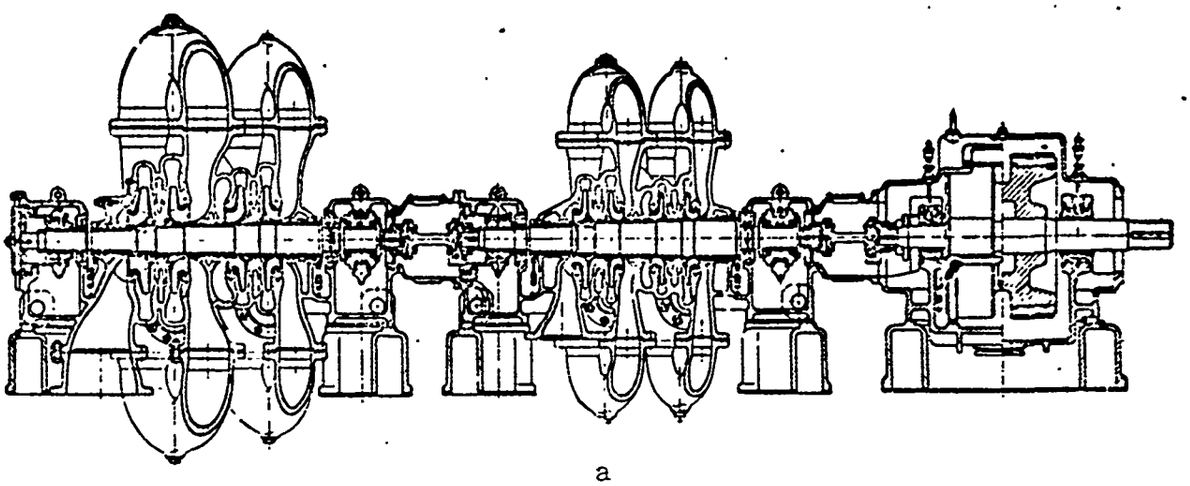

a

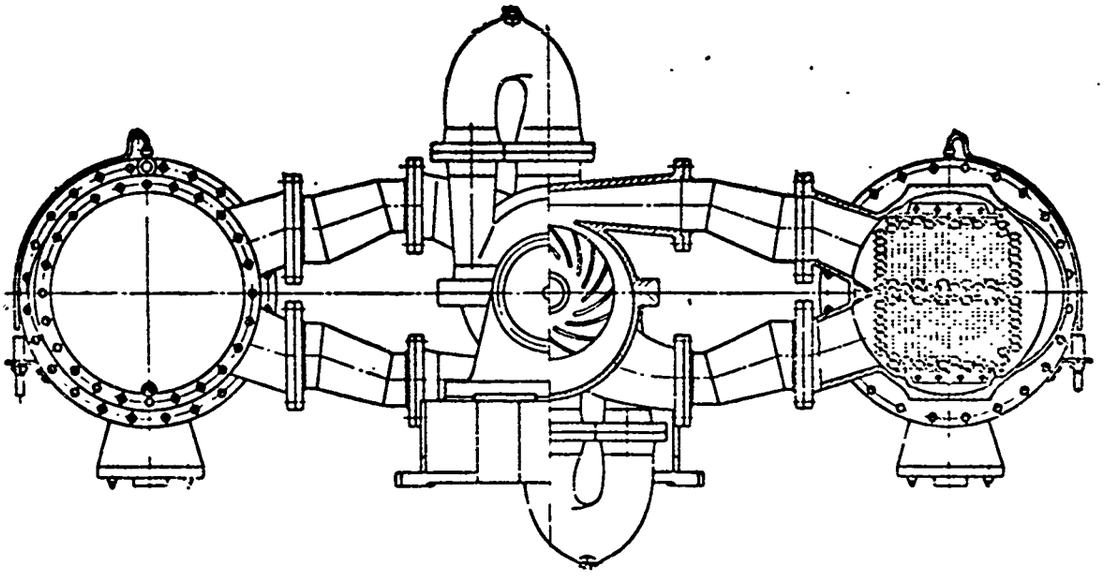

b

Fig. 1. Over-all view of the KTK-7 turbocompressor: a) longitudinal section; b) transverse section.

In the event of shutdown due to malfunction after preliminary audible or light signals a new startup of the turbocompressor automatically becomes possible after the defect which caused the malfunction has been removed.

The fluid-flow controls and regulating devices can also be operated remotely from the control panel or by hand from the maintenance platforms.

Figure 2 is a flow diagram of the turbocompressor.

A number of shutoff valves not connected to the automatic control system are designed for regulation of the water supply to each of the gas condensers, the supply of nitrogen to the traps of the labyrinth packing, and regulation of leakage and overflow, i.e., for operations which are carried out during adjusting of the machine or occasionally. Provision is made in the design of the machine for maximum convenience in assembly, adjusting, operation, and inspection.

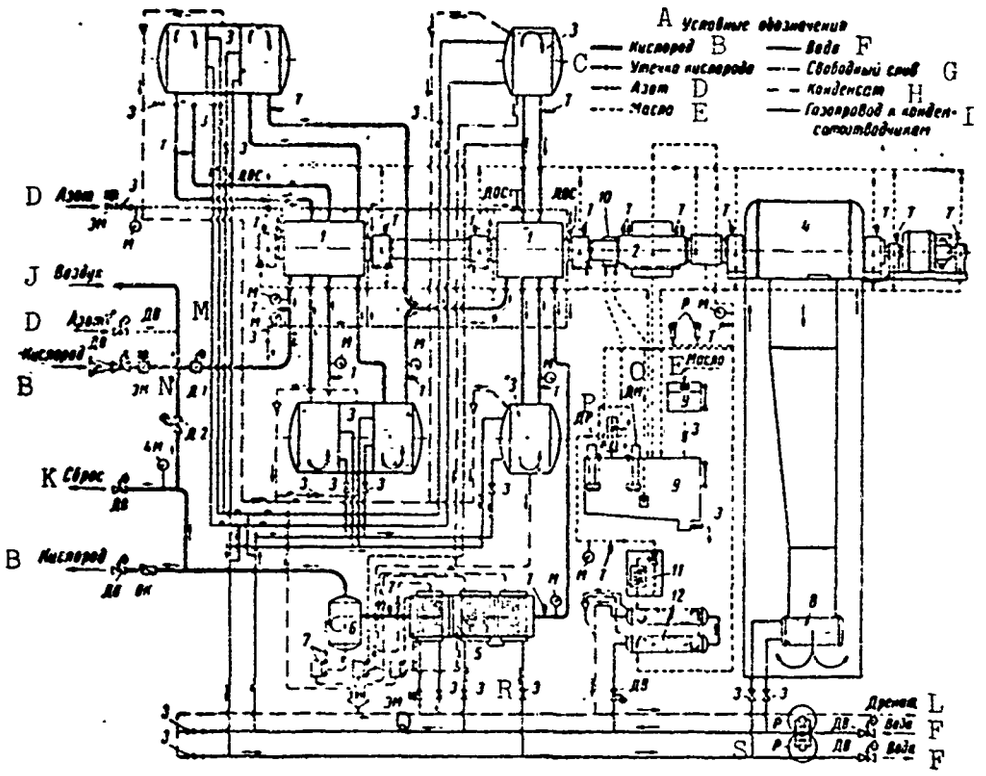


Fig. 2. Flow diagram of the KTK-7 turbocompressor: 1) turbocompressor; 2) reducer; 3) intermediate coolers; 4) electric motor; 5) final cooler; 6) moisture separator; 7) condensate removers; 8) air-cooler motor; 9) oil tanks; 10) operating oil pump; 11) oil filter; 12) oil cooler; DV) gates and valves, electrically driven; D-1) throttling gate; D-2) bypass valve; DM and DR) starting oil pumps (main and reserve); EM) electromagnetically driven valves and oxygen cutoff gate; Z) manual regulating valves and drainage valves; M) manometers; 4M) sensitive manometer to regulator; R) oil-pressure relay and cooling-water flow rate relay; T) resist-

ance thermometer; OK) check valve; DOS) axial-displacement sensor. A) Legend; B) oxygen; C) oxygen leakage; D) nitrogen; E) oil; F) water; G) waste drain; H) condensate; I) gas duct to condensate removers; J) air; K) discharge; L) drainage; M) DV; N) D; O) DM; P) DR; Q) EM; R) Z; S) R; T) DOS.

## ASSEMBLY OF THE KTK-7 TURBOCOMPRESSOR

The technology of assembly of oxygen turbocompressors has been worked out on the basis of the technology of assembly of air turbocompressors. However, the assembly of oxygen compressors involves more severe requirements with regard to precision and reliability in setting up the machine. In addition, the technology of assembly of an oxygen turbocompressor involves a number of additional operations due to the specific properties of the gas being compressed.

In order to meet these requirements, the design provided for setting up the turbocompressor casings on setting plates or on a welded metal framework built into the foundation. The casings are aligned by means of precisely adjusted shims placed between the setting elements and the base plates, one on each side of the foundation bolt and at heavily loaded points.

Foils or shims must not be placed under the base plates.

This method of assembly ensures reliable attachment of the machine to the foundation, i.e., maintenance of alignment when mortar is poured into the molds and when the machine is operated for long periods.

In the design of the machine supports and in the assembly techniques, provision is made for vertical and horizontal adjuster bolts. The use of adjuster bolts in the alignment of the machine eliminates the use of crowbars, sledge hammers, and wedges and considerably simplifies the preliminary placement of the turbocompressor on the foundation. After the permanent shims have been placed, the adjuster bolts are removed.

The following is a description of the assembly of the first KTK-7 turbocompressor, set up at the "Zaporozhstal'" factory, and the results of its adjustment.

The KTK-7 oxygen turbocompressor (factory compressor No. 1) was installed, in accordance with the plans, in the machine room on the second floor of the oxygen plant, on a reinforced-concrete foundation plate. Steel support plates were placed on prepared areas of the foundation and cemented to it with cement mortar. Support plates were placed at all the foundation bolts (Fig. 3).

In addition, other support plates were placed under the reducer and motor, against the low-speed shafts. In the preparation of the sites and the placement of the plates on the foundation, the levels were adjusted to within 0.00-0.010 mm per meter along the foundation axis and to within 0.1-0.3 mm per 100 mm in the

GRAPHIC NOT REPRODUCIBLE

Fig. 3. Arrangement of the main foundation supports.

transverse direction with tilt away from the foundation axis. With this positioning of the foundation plates the intermediate shims had the shape of a slightly tapering regular wedge, which made it easy to drive them into place with minimum loss of time for filing and scraping. The surfaces of the supporting and foundation plates were carefully checked against a standard plate and partly filed before being set in place.

In the installation of the KTK-7 unit, the reducer was taken as the basis, and therefore the assembly began with the alignment of the reducer on the foundation, and the compressor hull and the electric motor were centered with respect to the reducer. The machine was provisionally adjusted by means of vertical and horizontal adjusting bolts (Fig. 4), which greatly facilitated the assembly process. The machine supports were adjusted at a distance of 50 mm from the foundation surface. The thickness of the intermediate shims was determined by means of an internal-reading gauge and was set equal to the distance between the supporting plate and the lower surfaces of the base plates of the machine. The dimensions of the shims were 120 × 180 and 120 × 150 mm for a thickness of 24-34 mm, and the slope was 0.2-0.6 mm over a length of 180 mm. The shims were made on a lathe with an allowance of 0.1 mm for manual adjustment. The fit of the surfaces was checked by paint-testing and with a 0.03-mm feeler.

GRAPHIC NOT REPRODUCIBLE

Fig. 4. Foundation supports.

After all the shims had been fitted into place and after the final centering, the adjusting bolts were removed, the shims were temporarily welded to the supporting plates by electrical welding, and the plates and frames of the machine were fixed to the foundation supports by conical control pins 12 mm in diameter.

In the welding of the shims the relative position of the hulls was checked with gauges.

It was noted that the centering was slightly disturbed during the welding, but thanks to the alternation of the welding points, the inaccuracy did not go beyond the allowable limits.

The spaces between the aperture walls and the bolts of the movable supports of the compressor hulls were checked. The bolts of the movable supports were tightened with a very small amount of force.

The KTK-7 units were centered by means of special devices with two gauges (Fig. 5). The method used made it possible to save time and make the centering highly accurate. In order to prevent any axial movement of the high-speed gear shaft, a supporting bolt with a small sphere was placed against the face of the shaft during centering.

GRAPHIC NOT
REPRODUCIBLE

Fig. 5. Centering of the turbocompressor.

The results of the final centering are shown in Table 1, from which it is clear that the displacement of the high-speed shafts is no more than 0.03 mm and the displacement of the low-speed shafts is no more than 0.04 mm; the misalignment of the axes is no more than 0.01 mm over 100 mm of coupling diameter.

After the final adjustment of the support, the plates and frames of the units were attached with cement mortar made with fine gravel measuring up to 20 mm.

The oxygen turbocompressor was degreased twice with carbon tetrachloride, with subsequent blowing and drying of the parts. The first degreasing of the machine was carried out at the time of assembly, the second after running-in with air and nitrogen

TABLE 1

Results of Centering of the KTK-7 Turbocompressor

| 1 Наименование агрегатов | 2 Замеры смещения по индикатору в мм | | | | 3 Смещение осей в плоскостях в мм | |
|---|---|---|---|---|---|---|
| | a | b | c | d | 4 горизонтальной | 5 вертикальной |
| 6 Редуктор — корпус высокого давления | 0,02 | 0,03 | 0,00 | 0,051 | 0,005 | 0,03 |
| 7 Корпус высокого давления — корпус низкого давления | 0,02 | —0,04 | 0,00 | 0,02 | 0,03 | 0,01 |
| 8 Электродвигатель — редуктор | 0,00 | 0,06 | 0,00 | 0,08 | 0,03 | 0,04 |

1) Names of units; 2) displacement measurements according to gauge, in mm; 3) displacement of axes in planes, in mm; 4) horizontal; 5) vertical; 6) reducer-high-pressure hull; 7) high-pressure hull-low-pressure hull; 8) electric motor-reducer.

Continuation of Table 1

| 1 Наименование агрегатов | 2 Замеры излома осей по индикатору в мм | | | | 3 Излом осей в плоскостях в мм | |
|---|---|---|---|---|---|---|
| | x | y | z | w | 4 горизонтальной | 5 вертикальной |
| 6 Редуктор — корпус высокого давления | 0,002 | 0,004 | 0,00 | 0,00 | 0,002 | 0,00 |
| 7 Корпус высокого давления — корпус низкого давления | 0,04 | 0,015 | 0,004 | 0,01 | 0,025 | 0,006 |
| 8 Электродвигатель — редуктор | 0,00 | 0,00 | 0,000 | 0,015 | 0,00 | 0,015 |

Displacement:

in horizontal plane $i_g = (a - b)/2$

in vertical plane $i_v = (c - d)/2$

Misalignment of axes:

in horizontal plane $k_g = x - y$

in vertical plane $k_v = z - w$

Diameter of centering device $D$ = 250 mm.

1) Names of units; 2) displacement measurements according to gauge, in mm; 3) misalignment of axes in planes, in mm; 4) horizontal; 5) vertical; 6) reducer-high-pressure hull; 7) high-pressure hull-low-pressure hull; 8) electric motor-reducer.

before starting the machine on oxygen operation.

The second degreasing was carried out by vaporization, for which a terminal cooler was used. The steam from the heating system, connected to the water space of the cooler, heated the solvent poured into the gas space.

The solvent evaporated, and its vapors washed the entire machine, the coolers, and the piping. In addition, 25-30 liters of solvent were poured into the intake pipe with an open bypass valve and a closed discharge valve of the operating machine. Thereafter, the entire system was blown through for several hours with waste nitrogen.

A thorough blow-through after the first and second washings prevented corrosion of the parts.

Before final assembling, the oil pipes were pickled with a hydrochloric acid solution, washed with water, dried, and lubricated with oil in order to prevent corrosion.

During the assembly process the assembly clearances were checked and adjusted. When the machine was run in the clearances in the reducer bearings became somewhat larger. Tables 2 and 3 (Figs. 6 and 7) show the final assembly clearances, with which the machine was started in operation.

TABLE 2

Clearances in Bearings, in mm (Fig. 6)

| | | | | | | |
|---|---|---|---|---|---|---|
| 1 № подшипника | I | II | III | IV | V | VI |
| 2 Радиальные зазоры между вкладышем и шейкой вала | 0,12 | 0,15 | 0,13 | 0,16 | 0,16 | 0,16 |
| 3 Натяг (—) или зазор (+) между вкладышем и корпусом . . . . . | +0,02 | +0,05 | —0,02 | +0,025 | +0,025 | +0,035 |
| 4 Осевые зазоры в упорных подшипниках . . . . . | — | 0,25 | — | 0,25 | — | — |
| 5 Зазор в демпфере . . . | 0,3 | — | 0,3 | — | — | — |

Continuation of Table 2

| | | | | | | |
|---|---|---|---|---|---|---|
| 1 № подшипника | VII | VIII | IX | X | XI | XII |
| 2 Радиальные зазоры между вкладышем и шейкой вала . | 0,15 | 0,14 | 0,17 | 0,17 | 0,16 | 0,2 |
| 3 Натяг (—) или зазор (+) между вкладышем и корпусом . . . . . | —0,025 | —0,01 | +0,07 | +0,05 —0,02 | —0,02 | +0,04 |
| 4 Осевые зазоры в упорных подшипниках . . . . . | — | 0,25 | — | — | — | — |
| 5 Зазор в демпфере . . . | — | — | — | — | — | — |

Note. Clearance between gear piece equals 0.14-0.16 mm.

1) Number of bearing; 2) radial clearances between the bushing and the neck of the shaft; 3) force fit (—) or clearance (+) between

bushing and hull; 4) axial clearances in support bearings; 5) clearance in damper.

TABLE 3

Radial Clearances in Labyrinths and Other Clearances Between Parts of Rotor and Stator (Fig. 7)

| 1 Осевые зазоры в мм | | | 5 Радиальные зазоры в лабиринтах в мм | | |
|---|---|---|---|---|---|
| 2 Обозначение позиции | 3 Корпус низкого давления | 4 Корпус высокого давления | 2 Обозначение позиции | 3 Корпус низкого давления | 4 Корпус высокого давления |
| a | 2,45 | 2,37 | I | 0,25 | 0,17 |
| b | — | — | II | 0,25 | 0,2 |
| c | 3,95 | 2,87 | III | 0,25 | 0,2 |
| d | 2,45 | 2,75 | IV | 0,65 | 0,4 |
| e | — | — | V | 0,4 | 0,18 |
| f | 2,6 | 2,55 | VI | 0,65 | 0,3 |
| g | 2,5 | 2,55 | VII | 0,25 | 0,3 |
| h | — | — | VIII | 0,5 | 0,3 |
| i | 2,95 | 2,35 | IX | 0,3 | 0,2 |
| k | 2,35 | 2,35 | X | 0,28 | 0,2 |
| l | — | — | XI | 0,25 | 0,25 |
| m | 2,3 | 2,4 | XII | 0,28 | 0,25 |
| n | 2,5 | 3,5 | XIII | 0,27 | 0,3 |
| o | 3,0 | 3,0 | XIV | 0,1 | 0,1 |
| p | 3,0 | 3,6 | XV | 0,1 | 0,1 |
| q | 3,0 | 3,6 | | | |
| r | 3,0 | 3,0 | | | |
| s | 1,65 | 1,06 | | | |
| t | 1,45 | 1,15 | | | |
| u | 3,0 | 3,0 | | | |
| v | 3,85 | 3,0 | | | |
| w | 1,0 | 1,45 | | | |
| x | 1,0 | 0,95 | | | |

1) Axial clearances in mm; 2) designation of position; 3) low-pressure hull; 4) high-pressure hull; 5) radial clearances in labyrinths in mm.

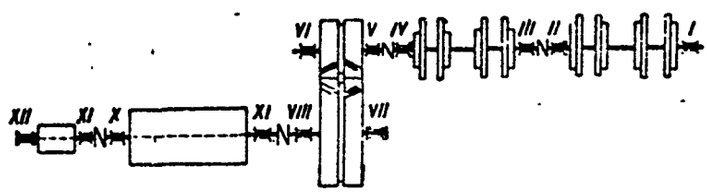


Fig. 6. Arrangement of bearings of the KTK-7 turbocompressor: I, III) radial damping bearings; II, IV) radial support bearings; V, VI) radial bearings of high-speed gear; VII) radial bearing of low-speed gear of reducer; VIII) radial support bearing of low-speed gear; IX, X) bearings of electric motor; XI, XII) bearings of exciter.

During the assembly period the wobbling was measured at various points (Fig. 8) of the rotors and toothed couplings (Table 4). After the machine had been run in, the wobble was measured again and no changes were found.

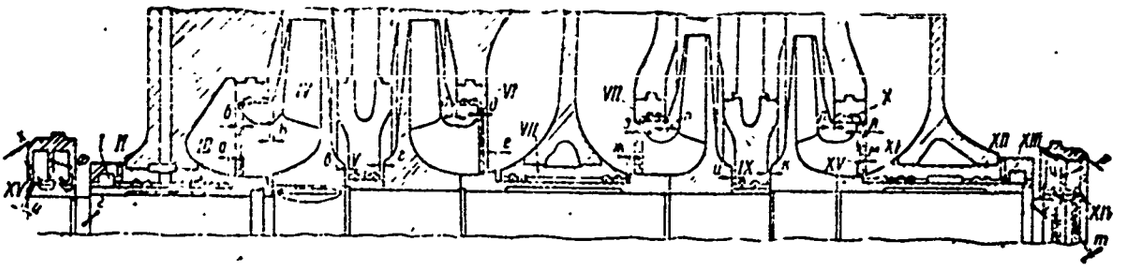

Fig. 7. Clearances between rotor and hull of the turbocompressor and clearances in the labyrinths.

The oil and gas coolers were tested at operating pressure and high pressure before installation.

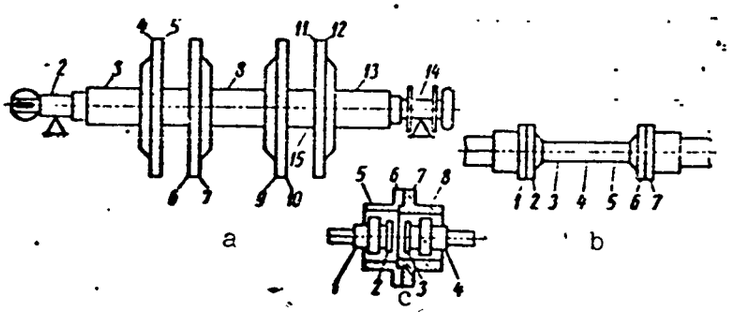


Fig. 8. Arrangement for the checking of radial wobble: a) rotor of turbocompressor; b) high-speed toothed coupling; c) low-speed toothed coupling of reducer and electric motor.

The pipes were tested for strength and tightness and were thoroughly blown through with air.

During the initial starts and running in of the KTK-7 turbocompressor, the machine was run with air for 8 hours. The water was taken from the atmosphere through an intake tube 250 mm in diameter. It was observed that during operation the compressor took in not only air but also oil vapors which had gone from the oil tank into the atmosphere, and for this reason the subsequent tests were made with waste nitrogen from the regenerators. The purity of the waste nitrogen varied between 94 and 96%.

The machine operated with air and nitrogen for about 15 hours. During this period the safety devices were adjusted; the adjustment limits are shown in Table 5.

TABLE 4

Wobble of Rotors and Couplings (Fig. 8)

| 1 Узлы | 2 Величина биения для различных точек в мм | | | | | | |
|---|---|---|---|---|---|---|---|
| | 1 | 2 | 3 | 4 | 5 | 6 | 7 |
| 3 Ротор турбокомпрессора, корпус низкого давления (фиг. 8, а) | — | 0,00 | 0,05 | 0,06 | 0,05 | 0,01 | 0,055 |
| 4 То же корпус высокого давления (фиг. 8, а) | — | 0,00 | 0,01 | 0,02 | 0,02 | 0,015 | 0,015 |
| 5 Быстроходная зубчатая муфта роторов низкого и высокого давления (фиг. 8, б) | 0,03 | 0,02 | 0,02 | 0,02 | 0,025 | 0,03 | 0,02 |
| 6 То же муфта редуктора и ротора высокого давления (фиг. 8, б) | 0,02 | 0,04 | 0,045 | 0,03 | 0,02 | 0,02 | 0,02 |
| 7 Тихоходная зубчатая муфта редуктора и электродвигателя (фиг. 8, в) | 0,015 | 0,015 | 0,03 | 0,015 | 0,01 | 0,05 | 0,02 |

Continuation of Table 4

| 1 Узлы | 2 Величина биения для различных точек в мм | | | | | | | |
|---|---|---|---|---|---|---|---|---|
| | 8 | 9 | 10 | 11 | 12 | 13 | 14 | 15 |
| 3 Ротор турбокомпрессора, корпус низкого давления (фиг. 8, а) | 0,04 | 0,04 | 0,03 | 0,02 | 0,02 | 0,01 | 0,00 | — |
| 4 То же корпус высокого давления (фиг. 8, а) | 0,15 | 0,025 | 0,01 | 0,01 | 0,01 | 0,01 | 0,00 | 0,02 |
| 5 Быстроходная зубчатая муфта роторов низкого и высокого давления (фиг. 8, б) | — | — | — | — | — | — | — | — |
| 6 То же муфта редуктора и ротора высокого давления (фиг. 8, б) | — | — | — | — | — | — | — | — |
| 7 Тихоходная зубчатая муфта редуктора и электродвигателя (фиг. 8, в) | 0,04 | — | — | — | — | — | — | — |

1) Assembly; 2) wobble value for different points, in mm; 3) turbocompressor rotor, low-pressure hull (Fig. 8a); 4) same with high-pressure hull (Fig. 8a); 5) high-speed toothed coupling of low-pressure and high-pressure rotors (Fig. 8b); 6) same with coupling of reducer and high-pressure rotor (Fig. 8b); 7) low-speed toothed coupling of reducer and electric motor (Fig. 8c).

The automatic turbocompressor was adjusted.

The sequence of operation in automatic startup, automatic normal shutdown, and emergency shutdown is given in the time-sequence diagram (Fig. 9).

Further adjustments and the production and acceptance tests were carried out with 95-98.5% pure oxygen.

After running-in and three-day continuous testing of the machine under operating conditions, the turbocompressor and reducer were inspected; no defects were discovered in the course of the inspection.

TABLE 5

Adjustment Limits of the Safety Devices of the KTK-7 Turbocompressor

| 1 Наименование защитных устройств | Количество 2 | 3 Пределы регулирования | |
|---|---|---|---|
| | | 4 Звуковой и световой сигнал | 5 Аварийное отключение машины |
| 6 Масляное реле | 1 | 0,5 ат 13 | — 13 |
| 7 Водяное реле | 1 | — 14 | 0,3 ат |
| | 1 | 60 м³/ч | — 14 |
| 8 Температурная защита подшипников | 1 | — | 30 м³/ч |
| 9 Защита машины по температуре кислорода после холодильников | 12 | 70° | 80° |
| 10 Защита машины по температуре масла, поступающего на машину | 7 | 55° | 65° |
| 11 Противопожарные датчики | 1 | 50° | 65° |
| 12 Датчики осевого сдвига | 8 | — | 195–200° |
| | 4 | — | Зазор 0,5 мм 15 |

1) Designation of safety device; 2) number; 3) adjustment limits; 4) sound and light signal; 5) emergency shutdown of machine; 6) oil relay; 7) water relay; 8) bearing temperature safety device; 9) machine safety device controlled by oxygen temperature after coolers; 10) machine safety device controlled by temperature of the oil entering the machine; 11) fire-prevention indicators; 12) axial displacement indicators; 13) atmospheres; 14) $m^3$/hr; 15) clearance 0.5 mm.

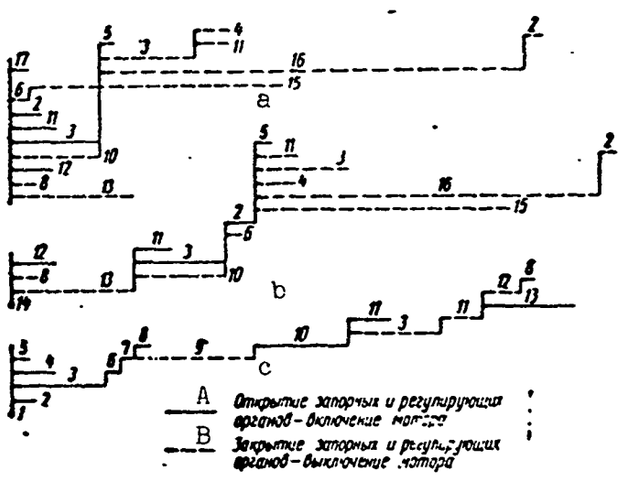


Fig. 9. Time-sequence diagram for startup and shutdown of the KTK-7 oxygen turbocompressor: a) emergency shutdown of compressor caused by tripping of oil and water relays and fire-prevention indicators, by increase of bearing temperature, by axial displacement of rotors, and by increase in temperature of gas and oil in coolers; b) automatic shutdown from control panel; c) automatic startup; 1) starting button; 2) startup oil pump; 3) waste-nitrogen gate (opening 70 sec); 4) water gate (30 sec); 5) nitrogen into labyrinths (instantaneously); 6) synchronous electric motor (startup 9 sec); 7) idling operation of compressor (10 sec); 8) throttle valve (15 sec); 9) compressor operation for warmup (600 sec); 10) oxygen intake gate (90 sec); 11) discharge valve (30

sec); 12) bypass valve (15 sec); 13) oxygen pressure valve (90 sec); 14) shutdown button; 15) runout of the compressor (185 sec); 16) oil pumping to cool the machine (420 sec); 17) $O_2$ cutoff valve (instantaneous). A) Opening of blocking and regulating elements-startup of motor; B) closing of blocking and regulating elements-shutdown of motor.

The turbocompressor was put into operation after a thorough and lengthy (about 400 hours) check of its operation under normal operating conditions.

## THE KTK-7 TURBOCOMPRESSOR IN OPERATION AND AT THE BRUSSELS WORLD'S FAIR (1958)

The experimental plant of the institute produced three KTK-7 turbocompressors. All of them were tested with air at the VNII-KIMASh testing unit. One of them was installed, tested with oxygen, and put into operation at the Zaporozhstal' plant in November 1958.

In April 1959, after more than 5 months of round-the-clock operation, this turbocompressor was subjected to an inspection which showed it to be in good condition. The commission recommended that it should next be inspected after 5000-6000 hours of operation. Two units were sent to India for installation at the oxygen station of the Bhilai metallurgical plant.

Figure 10 shows a general view of the KTK-7 turbocompressor at the institute's testing unit.

GRAPHIC NOT REPRODUCIBLE

Fig. 10. The KTK-7 turbocompressor at the institute's testing unit.

In addition, the experimental plant of the institute produced a turbocompressor with an incomplete set of auxiliary equipment for the Brussels World's Fair.

Figure 11 shows the turbocompressor at its exhibition station, with an automatic control console and a pilot-light system simulating automatic startup and shutdown.

GRAPHIC NOT REPRODUCIBLE

Fig. 11. The KTK-7 turbocompressor at its exhibition station at the Brussels World's Fair (1958).

The KTK-7 turbocompressor was awarded high honors at the fair, receiving the Grand Prize.

## RESULTS OF THE TESTS

The testing of the compressor at its installation site at the Zaporozhstal' plant, after an adjustment with vibration check, was carried out with oxygen with a concentration of about 95%, in a closed cycle.

The compressed oxygen entered the final gas cooler and moisture separator, was directed through a pressure valve into a pressure collector, and from there, through a special connector, was returned to the intake line.

The oxygen which escaped through the external packing passed into the intake pipe.

In the testing process we measured the gas pressures $p_n$ and $p_k$ in the intake and pressure pipes of the compressor, respectively; the gas temperatures at the compressor inlet and outlet, $t_n$ and $t_k$; the temperature $t_w$ and the flow rate of the cooling water (after the diaphragm) in the feeder pipes; the output of the compressor after the diaphragm installed in the intake pipes; and the required power at the terminals of the electric motor, using a two-wattmeter circuit.

In addition, we measured the temperatures and pressures at

the outlets of the intermediate gas coolers.

The weight output of the turbocompressor was determined by the formula

$$G = 0{,}01252\alpha d^2 \varepsilon \sqrt{\Delta h \gamma} \text{ kg/hr},^*$$

where $\Delta h$ is the drop at the diaphragm in mm of Hg; $\gamma$ is the specific weight of the gas before the diaphragm in kg/m³; $d$ is the diameter of the diaphragm opening in mm; $\alpha$ is the flow rate coefficient with corrections; $\varepsilon$ is the correction for expansion.

The volume output under the intake conditions is

$$Q_н = \frac{G}{\gamma_н} \text{ m}^3/\text{hr}.$$

The volume output refers to $p$ = 760 mm Hg and $t$ = 20° is

$$Q_0 = \frac{G}{\gamma_0} \text{ m}^3/\text{hr},$$

where the specific weight of oxygen, $\gamma_0$, for an average gas constant value of $R_{sr}$ = 27 kgm/kg·deg, is equal to 1.3 kg/m³.

The degree of compression was defined as the ratio of the final and initial pressures, $p_k/p_n$.

The over-all isothermal efficiency was defined as the ratio of the isothermal power to the power loss:

$$\eta_{из} = \frac{GL_{из}}{10^3 N}.$$

The isothermal work was defined by the formula

$$L_{из} = 2{,}303 RT_н \lg \frac{p_к}{p_н} \text{ kgm/kg}$$

for approximately equal temperatures of the gas and cooling water during the testing of the compressor.

Figure 12 shows the results of the compressor tests in the form of curves of the degree of compression $p_k/p_n$, the power $N$ at the terminals of the electric motor, and the over-all isothermal efficiency $\eta_{iz}$, as functions of the volume output reduced to conditions of 20° and 760 mm Hg. As can be seen from the graph, under the test conditions, i.e., for an average initial temperature of 15° in the gas and 14° in the water, at an average oxygen concentration of about 95%, the results of turbocompressor operation at maximum efficiency are the following:

Volume output, referred to $p$ = 760 mm Hg and $t$ = 20°, in m³/hr..... 7700
Degree of compression..... 16.5

*In this article, kg should appear as kgf.

Power consumed at the terminals of the electric motor, in kw..... 1060
Isothermal efficiency at the terminals of the electric motor..... 0.57
Specific energy consumption, in kwh/m³..... 0.138
Total flow rate of cooling water, including water for cooling the electric motor, in m³/hr..... ∿140

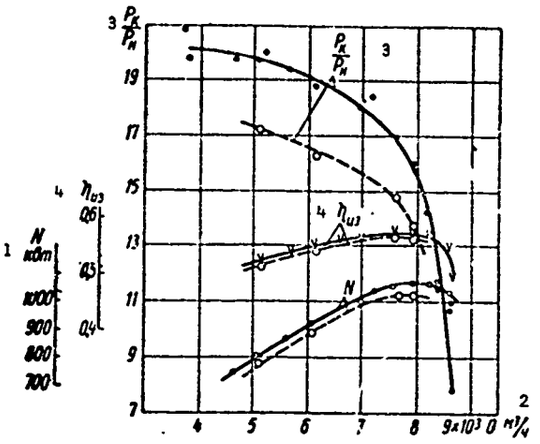


Fig. 12. Characteristics of the KTK-7 turbocompressor: oxygen 95%; $t_n = 15°$; $t_w = 14°$; $Q_w = 140$ m³/hr; the dashed curves represent the characteristic for $t_n = 25°$, $t_w = 30°$. 1) kw; 2) m³/hr; 3) $p_k/p_n$; 4) $\eta_{iz}$.

The economical range of utilization of the turbocompressor with an efficiency not less than 0.56 under the given conditions may be considered to be the output range from 7000 to 8300 m³/hr; the range of variation of the degree of compression corresponding to this is 18 to 13.

An approximate conversion to the conditions given and assumed in the design, i.e., to an initial temperature of $t_n = 25°$ in the gas and $t_w = 30°$ in the cooling water, yields the characteristics indicated by the dashed curves.

For a maximum efficiency of about 57% the degree of compression for the same output value is reduced to about 14.5, with a power loss of about 1030 kw.

Accordingly, the economical range of utilization of the turbocompressor with an efficiency not less than 0.56 is in the 7000-8100 m³/hr range with the corresponding range of degree of compression from 15.5 to 13. The pumping regime is rather far from the optimal regime. The ratio of the $Q_{kr}$, i.e., of the output corresponding to the pumping point, to the optimal output is

$$\frac{Q_{кр}}{Q_{опт}} = 0{,}52.$$

The operation of the turbocompressor at the Zaporozhstal' plant for more than a year showed that it is fully reliable in operation. Both its physical construction and its operating data — reliability, relatively quiet operation — were highly praised by the operating personnel.

The entire automatic system also performed very well. However, there are occasional false-alarm shutdowns of the turbocompressor due to defects in the design of the shutdown instruments.

Further manufacture of KTK-7 compressors has been transferred to the Kazan' Compressor Plant, which has already delivered three machines to the Krivorozhstal' plant. One of them has already been placed in operation.

Operating experience with the turbocompressor under the conditions of the Zaporozhstal' plant indicates that the compressor ordinarily operates at outlet pressures of approximately 11 absolute atmospheres, i.e., considerably lower pressure than the value specified for USSR conditions (15-16 absolute atmospheres).

Another compressor, a piston-type compressor with an output of about 3500 $m^3$/hr, normally operates in parallel with the KTK-7.

The above data indicate the need for additional work on the question of the advisable parameters — output and degree of compression — of oxygen turbocompressors designed to feed oxygen into open-hearth furnaces. It should be borne in mind that a reduction of the degree of compression and an increase of the output, other conditions being equal, leads to an increase in the efficiency of the turbocompressor.

Manuscript Page No.

## Footnotes

6 The Institute later authorized operation of the compressor with industrial oxygen as well.

8 V.F. Ris, Tsentrobezhnyye kompressornyye mashiny [Centrifugal Compressor Machinery], Mashgiz, Moscow-Leningrad, 1951.

## Transliterated Symbols

6 КТК = KTK = kislorodnyy turbokompressor = oxygen turbocompressor

6 ВНИИХИММАШ = VNIIKhIMMASh = Vsesoyuznyy nauchno-issledovatel'skiy institut khimicheskogo mashinostroyeniya = All-

| | |
|---|---|
| 6 | к = k = konechnyy = final |
| 6 | н = n = nachal'nyy = initial |
| 12 | ДВ = DV = dvigatel' = [electric] motor |
| 12 | Д = D = drossel' = throttle; = dvigatel' = motor |
| 12 | М = M = maslyanyy = oil; = manometr = manometer |
| 12 | Р = R = rezervnyy = reserve; = rele = relay |
| 12 | ЭМ = EM = elektromagnit = electromagnet |
| 12 | З = Z = zolotnik = slidevalve |
| 12 | Т = T = termometr = thermometer |
| 12 | ОК = OK = obratnyy klapan = check valve |
| 12 | ДОС = DOS = datchik osevogo sdviga = axial displacement sensor |
| 16 | г = g = gorizontal'nyy = horizontal |
| 16 | в = v = vertikal'nyy = vertical |
| 24 | ср = sr = srednly = average |
| 24 | из = iz = izotermicheskiy = isothermal |
| 25 | кр = kr = kriticheskiy = critical |
| 25 | опт = opt = optimal'nyy = optimum |

# THE KPK-6 PISTON-TYPE OXYGEN COMPRESSOR

Engineer L.A. Alekseyev, Engineer K.S. Butkevich

## INTRODUCTION AND GENERAL REMARKS

Piston-type compressors with unlubricated packing and, in particular, with graphite piston packing have recently come into increasingly widespread use both in Soviet and in foreign industry.

The reason for this is that the use of such compressors makes it possible to supply the consumer with compressed gas uncontaminated by any lubricant.

The use of such machines is desirable for compressing oxygen, since it makes it possible to dispense with the difficult and sometimes ineffective drawing process required when the compression is carried out by means of compressors using water-glycerine or emulsion lubrication. A design for an oxygen compressor with the parameters $Q$ = 1800 $m^2$/hr and $p_{nach}$ = 64 atm abs is now being worked out for the chemical industry by the Kazan' Design Office for Compressor Construction on the basis of technical designs prepared by the Central Design Office for Compressor Machinery of the VNIIKIMASh. The same Design Office, in accordance with the recommendations of the VNIIKIMASh, is producing a compressor with graphite rings to compress gaseous dry hydrogen chloride to a pressure of 6-8 gage atmospheres for the chemical industry on the basis of the KPK-6 compressor.

In the oxygen industry, graphite piston packings may be used in the following machines:

1) oxygen compressors operating at pressures of 15-16 gage atmospheres, serving autogenous networks of large metallurgical plants;

2) low-pressure and medium-pressure air compressors of oxygen stations;

3) compressors to deliver argon and krypton-xenon concentrates to the plants where they are refined;

4) oxygen vacuum pumps.

The KPK-6 piston-type oxygen compressor with graphite piston packing was developed at the VNIIKIMASh in 1958 in connection with the production of the VNIIKIMASh's large BR-5 oxygen installation for metallurgical plants.

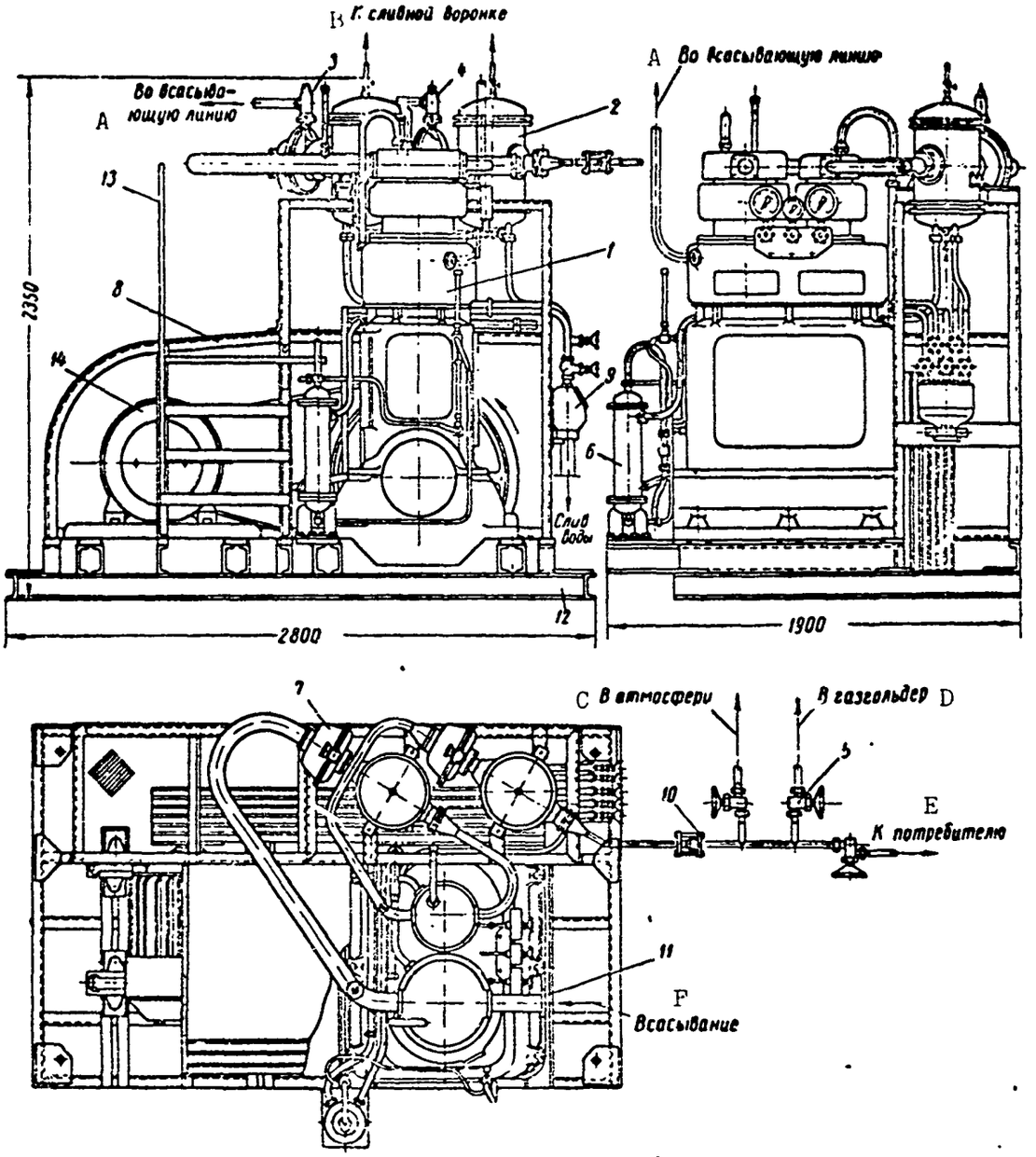


Fig. 1. The KPK-6 oxygen compressor: 1) the compressor proper; 2) cooler; 3) safety valve, $d_0$ = 16, $p$ = 4 gage atmospheres; 4) safety valve, $d_0$ = 6, $p$ = 16 gage atmospheres; 5) shutoff valve, $d_y$ = = 25, $p$ = 16 gage atmospheres; 6) oil cooler; 7) filter; 8) protective enclosure; 9) funnel; 10) check valve; 11) screen filter; 12) base beam; 13) platform; 14) electric motor. A) To intake line; B) to drainage funnel; C) to atmosphere; D) to gas holder; E) to consumer; F) intake.

The purpose of the KPK-6 compressor is to compress gaseous oxygen to a pressure of 15 kg/cm$^2$ and deliver it to the autogenous network of the plant.

### Technical Characteristics of the KPK-6 Compressor

| | |
|---|---|
| Gas being compressed | Oxygen |
| Output capacity on the basis of intake conditions in m$^3$/hr | 220-240 |
| Discharge pressure in kg/cm$^2$ | 16 |
| Intake pressure in kg/cm$^2$ | 1.04 |
| Temperature of intake oxygen in °C | not more than 40 |
| Temperature of cooling water in °C | not more than 40 |
| Cooling-water flow rate at temperature of 5°, in m$^3$/hr, not more than | 6 |
| Type of piston packing | Graphite (piston rings made of 2P-1000 graphite) |
| Number of compression stages | 2 |
| Diameters of cylinders, in mm: | |
| first stage | 280 |
| second stage | 140 |
| Piston stroke, in mm | 150 |
| Number of rpm | 500 |
| Shaft input, in kw | 42 |
| Total weight of compressor, in kg | 2270 |
| Maximum dimensions of unit, in mm: | |
| width | 1900 |
| length | 2800 |
| height | 2350 |
| Total weight of unit, in kg | 4100 |

Note. The electric motor driving the compressor is a type A083-4T motor; it has a power of 55 kw; it runs at 1450 rpm. The movement is transmitted from the electric motor to the compressor by six type G V-belts 4500 mm long.

The KPK-6 compressor (Fig. 1) consists of the compressor proper 1, two shell-and-tube coolers 2 for cooling the compressed oxygen, two filters 7 made of porous bronze, an electric motor 14, a cooler 6 for the oil, and an over-all welded base beam 12. In addition, the compressor is equipped with the necessary shutoff and safety devices and with monitoring and measuring instruments.

All the equipment of the unit is mounted on the welded frame, which is attached to the foundation.

The high position of the coolers, together with the filters and safety valves, makes for a compact structure and eliminates the need for excess piping.

A small manometer panel is mounted on the front face of the compressor.

The frame system which supports the coolers serves at the

same time as a shield 8 for the flywheel and the inclined-belt transmission. The electric motor is mounted on the frame on skids.

The cooling water is distributed through the coolers and the cylindrical jackets of the compressor in the water discharge lines into the drainage funnel.

For convenience in maintenance and repair, the compressor is equipped with the drainage funnel 13.

The fact that the entire unit is mounted on a single frame makes it convenient to transport.

## FLOW DIAGRAM OF THE KPK-6 COMPRESSOR

Figure 2 shows a flow diagram of the KPK-6 compressor.

The oxygen from the gasholder is drawn into the first stage, passes through the filter 2 and the cooler 3 of the first stage, and then goes into the second stage. After compression in the second stage, the gas passes through the filter 4 and the cooler 5 of the second stage and then goes to the pressure collector, which contains three shutoff valves.

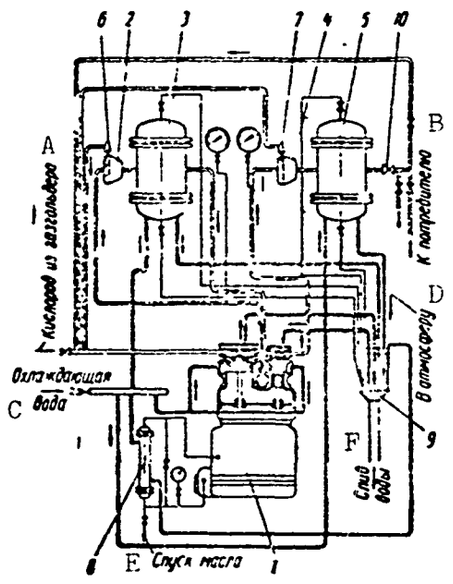


Fig. 2. Engineering flow diagram of the KPK-6 oxygen compressor: 1) oxygen compressor; 2 and 4) filters; 3 and 5) coolers; 6 and 7) safety valves; 8) oil cooler; 9) drainage funnel; 10) check valve. A) Oxygen from gasholder; B) to consumer; C) cooling water; D) to atmosphere; E) oil outlet; F) water discharge.

The gas can be delivered to a consumer, discharged into the atmosphere, or fed into the first stage.

The water for cooling the compressor and the coolers is de-

livered to a pressure collector and from there to the cylinders and coolers. At the water discharge point the amount of water delivered is regulated by means of valves.

The water is discharged into the drainage funnel 9 and is discharged into the drainage system.

In order to trap mechanical impurities, a filter is set up at the intake of the first stage; in addition, beyond the first and second stages there are two filters 2 and 4 made of porous bronze which are suitable for trapping the fine graphite dust formed through wear of the graphite piston rings.

The safety valves 6 and 7 of the first and second stages keep the operation safe in the event of overloading or raising the pressure beyond the allowable value.

The main pressure line contains a check valve 10 (see Fig. 2) designed for the case of parallel operation of several machines in a common network. This valve lets the gas through in only one direction.

## THE KPK-6 COMPRESSOR

The KPK-6 compressor (Fig. 3) is a vertical two-line two-stage single-action machine.

The main distinguishing features of the compressor are graphite piston and gland packings which do not require lubrication.

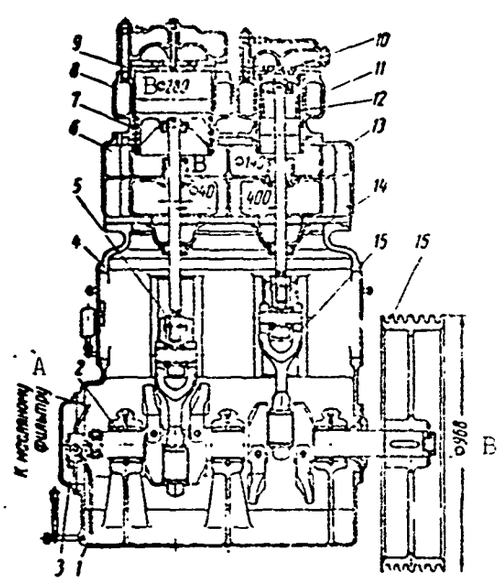


Fig. 3. Compressor: 1) crank case; 2) crank shaft; 3) oil pump; 4) housing; 5) crosshead; 6) intermediate piece (connector) with packing glands; 7) piston of first stage; 8) cylinder of first stage; 9) valve of first stage; 10) valve of second stage; 11) cylinder of second stage; 12) piston of second stage; 13) gas gland; 14) oil gland; 15) connecting rod; 16) flywheel. A) To oil filter; B) diameter.

The crankshaft-and-connecting-rod base of the compressor, the reliability of which was tested in operation, was taken without change from the compressor of series 2R of the Kazan' Compressor Factory.

The vertical position of the cylinders in the compressors creates favorable conditions for the operation of the piston rings and guide rings of the pistons. The crankshaft-and-connecting-rod base is also suitable from the standpoint of the allowable linear stresses.

The use of a prefabricated base reduced the time needed for constructing the experimental machine.

**The intermediate piece (connector) with glands.** A characteristic design detail of the oxygen compressors is an intermediate piece with two glands – an oil gland and a gas gland – which separate the crankcase cavity and the cylinder cavities.

This type of construction makes it possible to seal the cylinder hermetically and to remove any leaked oxygen through the piston rings into the intake pipe, as well as to prevent oil from passing from the crankcase into the cylinders, which is absolutely necessary for safe operation of the machine.

For the same purpose, antioil rings are attached to the piston rods between the glands and serve to prevent the oil film creeping up along the metal piston rod from entering the cylinders.

The gas gland (Fig. 4) is an assembly of graphite packing rings 4, pairwise enclosed in cups 2 and held tight by bracelet springs 3.

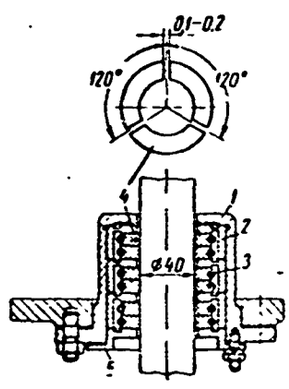


Fig. 4. Gas gland: 1) housing; 2) cup; 3) spring; 4) packing ring; 5) flange.

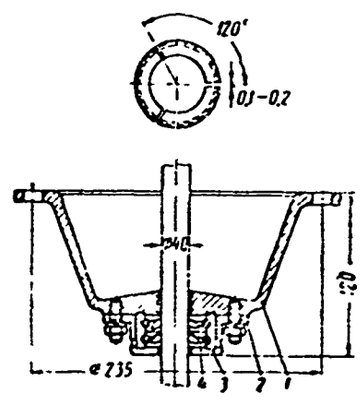


Fig. 5. Oil gland: 1 and 2) cups; 3) spring; 4) ring.

The oil gland (Fig. 5) has two rings 4 made of Br. OTsS 6-6-3

bronze; each ring is cut into three segments and is pressed together by means of cylindrical springs. The gas penetrating through the piston packing into the connector is removed into the intake piping.

**The pistons** of the first and second stages are made of LK 80-3L brass and are of the disk type. On the piston of the first stage (Fig. 6) there are four paired piston rings and two guide rings, and on the piston of the second stage (Fig. 7) there are six paired piston rings and two guide rings.

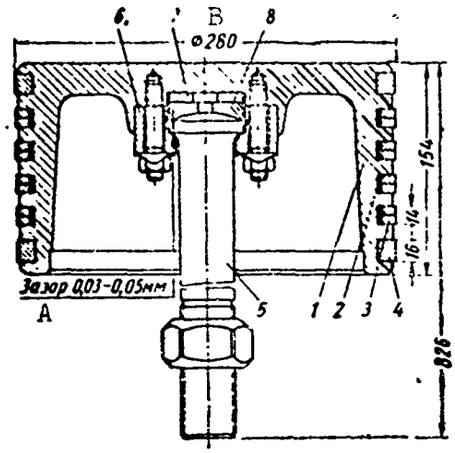


Fig. 6. Piston of the first stage: 1) piston; 2) expander ring; 3) piston ring; 4) guide ring; 5) piston rod; 6) cap; 7) washer; 8) pin. A) Space 0.03-0.05 mm; B) diameter.

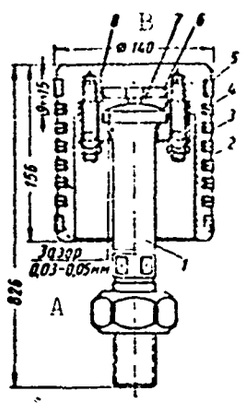


Fig. 7. Piston of the second stage: 1) piston rod; 2) piston of the second stage; 3) piston ring; 4) expander ring; 5) guide ring; 6) washer; 7) pin; 8) cap. A) Space 0.03-0.05 mm; B) diameter.

The pistons are hinged onto the piston rods, and this provides better centering of the piston in the cylinder.

The piston rings (Fig. 8) are made of 2P-1000 graphite.

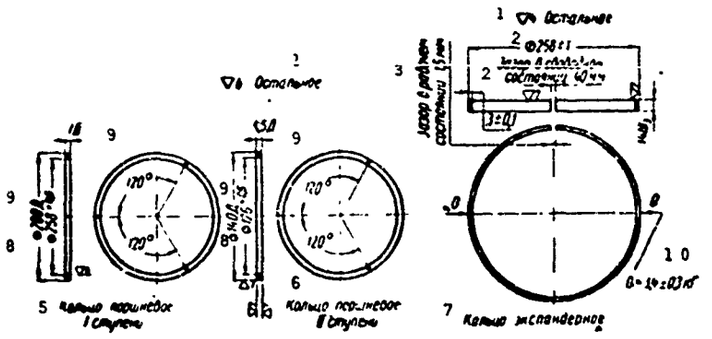

Fig. 8. Piston rings. 1) All others; 2) diameter; 3) space in operating condition equals 15 mm; 4) space in free condition equals 40 mm; 5) piston ring of first stage; 6) piston ring of second stage; 7) expander ring; 8) diameter; 9) D; 10) kg.

As can be seen from Figs. 6 and 7, the piston packing element consists of a pair of piston rings and a steel expander ring.

Such a system provides the best hermetic seal for the piston packing, since the system of two nested piston rings makes it possible to cover the spaces in the face joints on the rings (of which there are three per ring, spaced 120° apart), and the expander ring not only serves the primary function of pressing the rings against the cylinder wall but also covers these joints from the inside.

The construction of the piston rings is shown in Fig. 8. It can be seen from the figure that the piston lock is extremely simple in form and not advantageous from the standpoint of leakage.

Such a form was adopted because of the relatively low compression value in the compressor and the simpler manufacturing technique, as well as because the VNIIKIMASh lacked experience in working with high-strength graphites. We believe that the most serious attention should be devoted to the form of the piston lock.

It can be seen from Figs. 6 and 7 that the number of rings in the piston assembly of the first and second stages is 1.5-2 times the number found in the assemblies of ordinary compressors with oil lubrication.

This is fully justified when we consider that there is no oil film and there are more gaps in the joints of the segments of the graphite piston rings, which become larger in size as the rings wear out.

There are as yet no experimental recommendations for determining the most rational number of piston rings as a function of the delivery pressure in the stage. This problem must be solved in connection with a number of other factors: the dimensions of the pistons, the average piston velocity, the nature of the gas

being compressed, the form of the piston lock, etc.

The piston rods are made of 3Kh13 steel with surface hardening and subsequent polishing. The high strength and precise machining of the piston rod surfaces makes for tight seals in the packings and minimizes the wear of the parts which are in friction contact.

**The cylinders** of the first and second stages (Figs. 9 and 10), taken from the 2RK-1.5/220 compressor, are made of cast iron, with a cooling water jacket and are subjected to slight additional finishing when the bushings are forced into them.

The bushings forced into the cylinders are made of LK 80-3L cast brass. The working surface is subjected to chrome plating, with subsequent grinding and polishing to a high degree of purity – not less than ∇8.

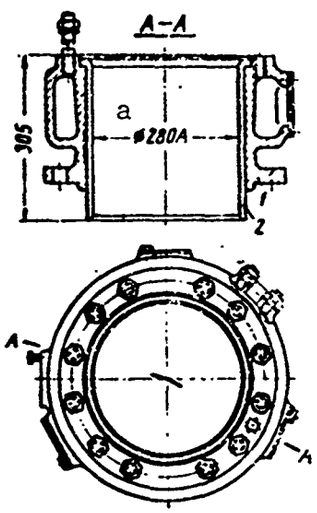


Fig. 9. Cylinder of first stage: 1) cylinder; 2) bushing. a) Diameter.

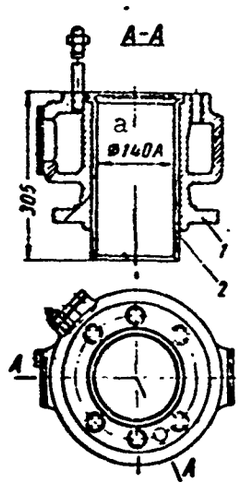


Fig. 10. Cylinder of second stage: 1) cylinder; 2) bushing. a) Diameter.

It should be noted that the graphite piston rings are well run in and operate with only slight wear of their hard and well-polished surfaces. This latter fact is particularly important. In the trials of the experimental model of the machine, the operating bushing of the second stage, made of 1Kh18N9T stainless steel, proved to be quite good.

**Valves.** A favorable choice of the design for the valves of compressors predetermines their working capacity to a considerable extent. Valve design becomes even more important in a compressor in which there is no lubrication and the valve plates operate under conditions of dry friction with no oil film to facilitate a better seal.

In the design of the KPK-6 compressor, two possible types of valves were considered: Gerbiger valves and band-type self-expanding valves.

The most suitable valves for the operating conditions of the KPK-6 compressor are Gerbiger valves, which have no friction elements. The VNIIKIMASh designers specified such a valve for the experimental KPK-6 machine, but it has not yet been adapted to this use. We believe that the adaptation of this valve will be necessary in connection with the more widespread use of compressors with graphite packings.

We used the second type of valve, i.e., band-type self-expanding valves (Figs. 11 and 12), in the KPK-6 compressor. This valve has a number of good features: light plates with small friction surfaces mean that there will be small frictional forces, which reduces jamming and wear of the valves; the valves are simple in construction and can be conveniently arranged in the cylinders of the machine; the technique of their manufacture is well known in our industry. Unlike the usual disks, the disks of these valves are made of LZhMts 59-1 brass, the plates themselves are made of 70S2KhA steel, and the face limiters of the plates are made of 1Kh18N9T stainless steel.

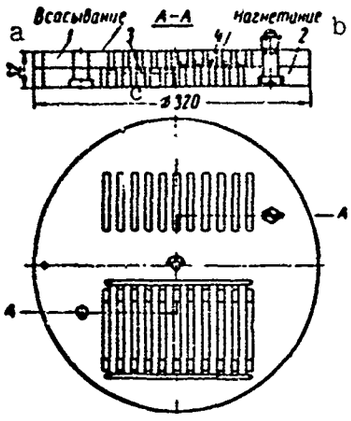


Fig. 11. Valve of first stage: 1) lower board; 2) upper board; 3) plate of intake valve; 4) plate. a) Intake; b) delivery; c) diameter.

The band plates made of 70S2KhA steel have one important drawback: under conditions of oxygen and moisture, they corrode. The use of an anticorrosion cover, such as cadmium plating or the like, is impossible, since this reduces the surface strength of the plates and may cause cracking and breaking, and the cover itself is not stable under the operating conditions of the plates. The use of beryllium plates, subjected to suitable heat treatment, obviously, is promising.

**Gas coolers.** The coolers of the first and second stages (Fig. 13) are of the shell-and-cube type with a movable grid.

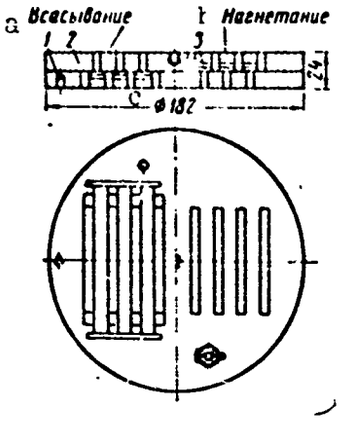


Fig. 12. Valve of second stage: 1) lower board; 2) upper board; 3) plate. a) Intake; b) delivery; c) diameter.

In the cooler the gas moves through the space between the pipes, and the water moves through the pipes.

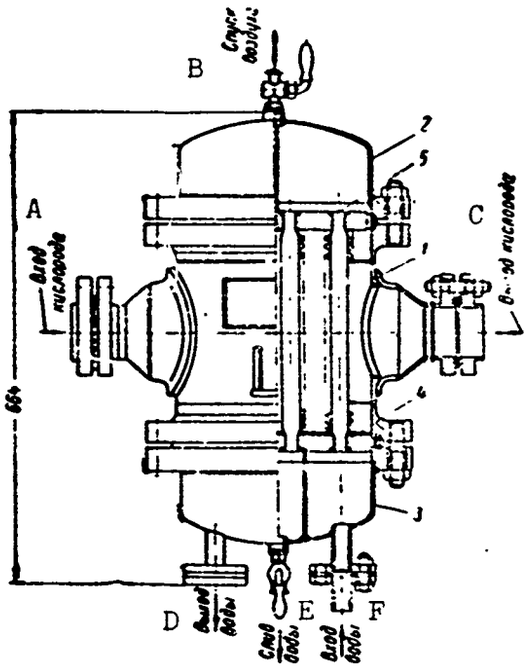


Fig. 13. Cooler of first and second stages: 1) shell; 2) upper cover; 3) lower cover; 4) pipe grid; 5) ribbed pipe. A) Oxygen inlet; B) air discharge; C) oxygen outlet; D) water outlet; E) water discharge; F) water inlet.

The pipes are made of brass and are elliptical in shape, with band-type ribbing, which provides better heat exchange between the gas and the water. In addition to the cooler described above (Fig.

13), the Central Design Office of the VNIIKIMASh has developed a design for a cooler (Fig. 14) which uses a cast brass shell and immovable (rigid) piping boards.

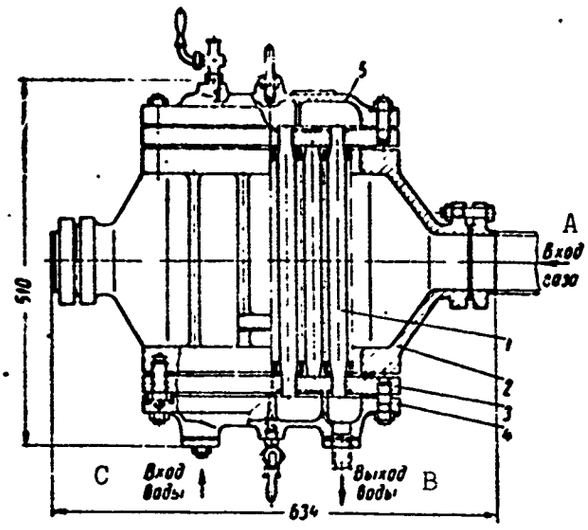


Fig. 14. Cooler of first and second stages: 1) ribbed pipe; 2) shell; 3) pipe grid; 4) lower cap; 5) upper cap. A) Gas inlet; B) water outlet; C) water inlet.

Similar designs were used by the VNIIKIMASh in the gas coolers for the turbocompressor delivered to India.

The advantage of this type of cooler construction over the cooler shown in Fig. 13 is that its dimensions are smaller, the design is more advanced, and the cooler is easier to manufacture. The upper part of the water chamber contains a tap to let out the air, and the lower part contains a tap to drain out the water. The shell of the cooler is made of brass.

**Filters.** After each compressor stage before the coolers there are filters for trapping the graphite dust (Fig. 15).

In the split cast brass shell 1, 3, between the two grids, there are seven conical cups 4 made of porous bronze, VTU 1083 (VNIIKIMASh), with a powder particle size of 0.2-0.3 mm.

**Safety valves.** The design of the safety valves of the first and second stages of the compressor is shown in Fig. 16. It ensures removal of the gas upon triggering of the valve into the intake of the first stage.

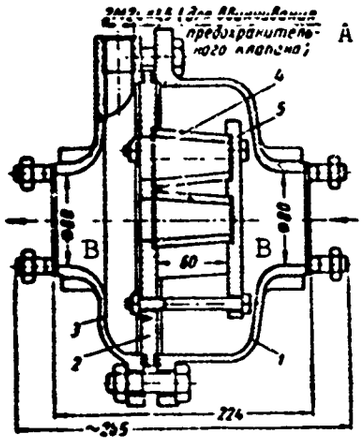


Fig. 15. Filter: 1) shell; 2) core; 3) cap; 4) cup; 5) cap. A) (For screwing in the safety valve); B) diameter.

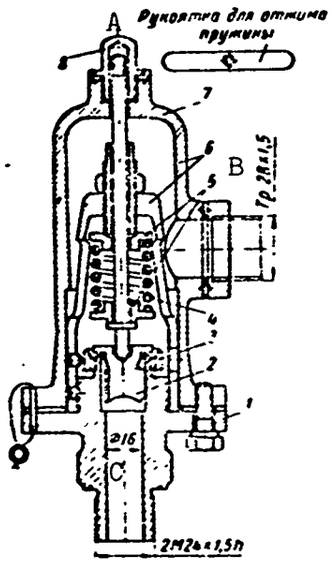


Fig. 16. Safety valve: 1) seat; 2) valve; 3) socket; 4) spring; 5) plates; 6) shell; 7) cap; 8) cap screw. A) Handle for releasing spring; B) Tr; C) diameter.

## MAIN PROPERTIES OF GRAPHITE MATERIALS AND REQUIREMENTS IMPOSED ON THEM

The special graphite materials from which the piston rings and seal rings of the glands are made must have a number of special properties, namely: a low coefficient of dry friction against metal; high resistance to wear; strength and tightness.

Our enterprises for the electrotechnical and other branches of industry manufacture blanks for rings, segments, rectangular

blocks, and bushings made of graphite materials of various brands.

Table 1 shows the brands and manufacturer's characteristics for graphites produced by specialized organizations in the Soviet Union and also, for purposes of comparison, foreign graphite brands known to us.

Among the brands of graphites shown in the table, those most suitable for piston rings are 2P-1000, G-3P, and G-2P. These brands of graphites have been tested at the VNIIKIMASh on its testing machines.*

We shall mention briefly the results of these tests.

Tests of wear in 2P-2000 graphites in steam with cast iron and G-3P graphites with 1Kh18N9T steel on a friction machine with a rocking journal yielded approximately identical results (Table 2). It can be seen from the table that the wear allowable for our conditions lies within the range of specific pressures up to 30 kg/cm$^2$.

Tests of G-2P and 2P-1000 graphites in steam with 1Kh18N9 steel on a friction machine with rotating disks (Table 3) also yielded approximately identical results. In steam with 2Kh13 steel the wear of these graphites became approximately twice as great. The wear of the E-46 graphite in steam with 1Kh18N9 steel is satisfactory; the wear of 2P-1000 graphite in steam with cast iron is slight, but the wear results for E-46 and G-2P graphites in steam with cast iron were found to be completely unsatisfactory.

The data given above indicate how much the brand of the metal against which the friction takes place influences the graphite wear.

Tests on the explosiveness of 2P-1000, G-2P, E-46, D, and Ye graphites showed that they do not explode in a gaseous oxygen medium at a pressure of up to 200-250 atm. Individual specimens of brands D and Ye graphites ignited.

From the tests of graphite piston rings on the 2R-3/220 and SA-8 test compressors, the following conclusions may be drawn.

Piston packings made of 2P-1000 graphite showed little wear under compression of the air to a pressure of up to 16 kg/cm$^2$; the assumed service lifetime of the piston packing is 6000 hr, and at an air compression value of up to 30 kg/cm$^2$ the service lifetime of the rings is 2500-3000 hr.

Graphite packings made of brand D graphite were tested at a pressure of 6-7 kg/cm$^2$; the approximate service lifetime of the rings is 2000-2500 hr. The use of brands D and Ye graphites in the cylinder for higher compression values is not recommended.

The durability of graphite piston packings under service conditions is greatly affected by how well the piston is centered in the cylinder and by whether there is any skewness during piston

TABLE 1

Characteristics of Graphites

| Марка графита 1 | Прочность на сжатие в кГ/см² 2 | Твердость по Шору $H_{sh}$ 3 | Пористость в % 4 | Кажущийся уд. вес $\gamma_k$ в Г/см³ 5 |
|---|---|---|---|---|
| 6 Г-3 | 256 | 34 | 21,65 | 1,7 |
| 7 Г-3П | 325 | 34 | 15,56 | 1,79 |
| 8 ПКО-С | 492 | 41 | 27,5 | — |
| 9 ПКО-О | 548 | 73 | 26,8 | — |
| 10 ПКО-ОС | 599 | 52 | 26,7 | — |
| 11 Г-2П | 615 | 54,3 | 25,62 | 1,48 |
| 12 АП | 659 | 67,1 | 22,64 | 1,56 |
| 13 ПКО | 733 | — | 25,38 | 1,47 |
| 14 ПКО-1000-П | 958 | 73,6 | 20,15 | 1,57 |
| 15 2П-1000 | 1675 | 78 | 14 | 1,7 |
| 16 Г-2П-ПП | 1878 | 81,5 | 13,19 | 1,71 |
| A | | | | |
| B | 400—500 | — | — | 1,75—1,80 |
| C | 300—400 | — | — | 1,60—1,65 |
| D | 250—300 | — | — | 1,50—1,60 |
| E | 160—250 | — | — | 1,50—1,55 |
| F | 1500—1800 | — | — | 1,65—1,60 |
| | 800—1000 | — | — | 1,70—1,80 |
| 17 Э-46 (отожженный) | 455 | — | — | 1,44 |
| 18 Г-1 | 160—400 | — | — | 1,48—1,47 |
| 19 Т-2 | 388—450 | — | — | 1,47—1,54 |
| Графит* 20 | 250—2500 | 30—100 | — | 1,65—1,86 |
| Граффаллой* 21 | 2350 | 75 | — | 2,83 |
| Морганий 22 СУ-4** | 1125 | 68 | — | 1,6 |
| Морганий 23 МУ-3Д** | 2750 | 65 | — | 3,0 |
| Морганий 24 ЕУ-1906** | 755 | 69 | — | 1,66 |
| Пьюребон* 25 | 1000—2670 | 52—85 | — | 1,56—1,6 |
| Баскадур*** 26 | 650—900 | — | — | 1,8 —1,9 |

*Manufactured in the United States of America.
**Manufactured in England.
***Manufactured in the Federal Republic of Germany.

1) Brand of graphite; 2) compression strength, in kg/cm²; 3) Shore hardness, $H_{sh}$; 4) porosity, in %; 5) apparent specific weight, $\gamma_k$, in g/cm³; 6) G-3; 7) G-3P; 8) PKO-S; 9) PKO-O; 10) PKO-OS; 11) G-2P; 12) AP; 13) PKO; 14) PKO-1000-P; 15) 2P-1000; 16) G-2P-PP; 17) E-46 (annealed); 18) G-1; 19) T-2; 20) graphite*; 21) graphalloy*; 22) Morganium SU-4**; 23) Morganium MU-3D**; 24) Morganium EU-1906**; 25) Purebon*; 26) Baskadur.***

motion, as well as by the material and degree of polish on the cylinder walls.

It should be noted that the VNIIKIMASh, together with the

TABLE 2

| Марка графита 1 | Трение графита в паре с металлом 2 | Удельное давление в кГ/см² 3 | 4 Длительность испытания в ч. | | | |
|---|---|---|---|---|---|---|
| | | | 2 | 4 | 6 | 8 |
| 5 2П-1000 | 7 Графит с чугуном | 10 | 1,8 | 2,53 | 2,7 | 2,8 |
| | | 20 | 2,0 | 3,6 | 4,6 | 5,0 |
| | | 30 | 4,2 | 6,2 | 11,9 | 20,4 |
| 6 Г-3П | 8 Графит со сталью 1Х18Н9 | 10 | 1,1 | 1,23 | 1,4 | 1,53 |
| | | 20 | 1,87 | 2,9 | 3,5 | 3,83 |
| | | 30 | 4,3 | 5,8 | 6,93 | 9,27 |

1) Brand of graphite; 2) friction of graphite in steam against metal; 3) specific pressure, in kg/cm²; 4) duration of test, in hours; 5) 2P-1000; 6) G-3P; 7) graphite with cast iron; 8) graphite with 1Kh18N9 steel.

TABLE 3

| Марка графита 1 | Удельное давление в кГ/см² 2 | 3 Износ материала по металлам | | | 4 Коэффициенты трения | | |
|---|---|---|---|---|---|---|---|
| | | Сталь 1Х18Н9 5 | Сталь 2Х13 6 | Чугун 7 | Сталь 1Х18Н9 5 | Сталь 2Х13 6 | Чугун 7 |
| Г-2П 8 | 50 | 0,29 | 0,46 | 0,53 | 0,23 | 0,20 | 0,18 |
| Э-46 9 | 50 | Неуд. 10 | 0,33 | 10 Неуд. | | 0,21 | Неуд. 10 |
| 2П-1000 11 | 50 | 0,27 | 0,46 | 0,23 | 0,17 | 0,19 | 0,23 |

1) Brand of graphite; 2) specific pressure, in kg/cm²; 3) wear of material against metals; 4) coefficients of friction; 5) 1Kh18N9 steel; 6) 2Kh13 steel; 7) cast iron; 8) G-2P; 9) E-46; 10) failure; 11) 2P-1000.

specialized organizations will have to conduct scientific investigations along the following lines:

1) determining the fatigue life of different brands of graphites under compression in nitrogen, hydrogen, helium, etc.;

2) investigations of how the wear of graphite piston packings depends on the average piston velocity, the final pressure, and the moisture content of the gas being compressed;

3) selection of the brands of graphite which are suitable for long-term operation in the compression of oxygen and air up to pressures of 100-200 kg/cm².

## RESULTS OF THE TESTS OF THE FIRST TEST SPECIMENS OF THE KPK-6 COMPRESSOR*

A special testing unit (Fig. 17) was set up at the VNIIKIMASh for testing the KPK-6 compressor.

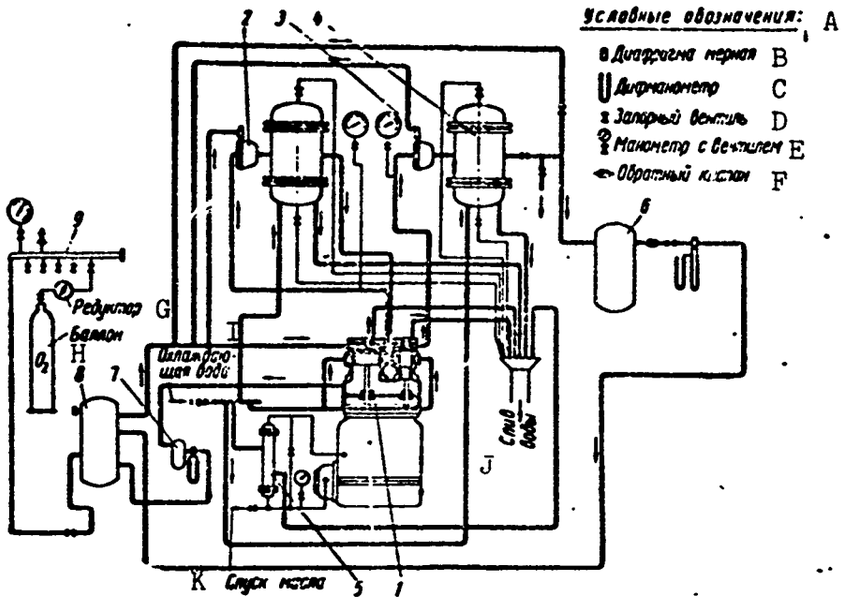


Fig. 17. Flow diagram of testing unit for tests of the KPK-6 oxygen compressor: 1) oxygen compressor; 2) filters; 3) safety valves; 4) coolers; 5) oil cooler; 6) delivery receiver; 7) leakage receiver; 8) intake receiver; 9) filling ramp. A) Legend; B) measuring diaphragm; C) dynamometer; D) shutoff valve; E) manometer with valve; F) check valve; G) reducer; H) tank; I) cooling water; J) water drainage; K) oil discharge.

The testing unit was adapted to operation with air and with oxygen. The flow diagram of the testing unit provides for a closed gas circulation system. Gas leaks were compensated during air operation by the inleakage of air from the atmosphere into a receiver, and during oxygen operation by the addition of oxygen into a receiver through a filling ramp, with the oxygen coming from tanks through a reducer.

The gas compressed in the first stage passed through the porous metal filter 2, the cooler 4, and, after being cooled, went to the second stage of the compressor. From the second stage the gas, at a pressure of 15 gage atmospheres, passing through the filter and cooler, entered the delivery receiver 6, the choke valve, the flow-rate measuring diaphragm, the main receiver 8, and then the intake line. The gas leaking through the piston rings was removed into the leakage receiver 7 and through a pipe to which the diaphragm was attached the leakage gas returned to the main receiver 8.

TABLE 4

Average Operational Indicators of the KPK-6 During the Testing Period

| Сжимаемый газ 1 | $p_к$ в ати 2 | $p$ первой ступени в ати 3 | Температура сжатого газа в °С 4 | | Производительность в м³/ч при 760 мм рт. ст. и 0° 7 | $n$ в об/мин. 8 | Коэффициент подачи $\lambda_п$ 9 |
|---|---|---|---|---|---|---|---|
| | | | после первой ступени 5 | после второй ступени 6 | | | |
| 10 Воздух | 15,0 | 2,85 | 157,5 | 162,0 | 212,4 | 500 | 0,761 |
| Кислород 11 | 11,6 | 2,7 | 169,7 | 173,4 | 230 | 500 | 0,827 |

1) Gas being compressed; 2) $p_k$, in gage atmospheres; 3) $p$ of first stage, in gage atmospheres; 4) temperature of compressed gas, in °C; 5) after first stage; 6) after second stage; 7) output in $m^3$/hr at 760 mm Hg and 0°; 8) $n$, in rpm; 9) delivery coefficient $\lambda_p$; 10) air; 11) oxygen.

In the testing process we measured the pressure of the gas after the first and second stages, the output capacity, the oil pressure, the delivery pressure after the first and second stages, after the coolers of the first and second stages, the temperature of the water and the oil, the power, the number of rpm, and the leakage of gas through the piston rings; we also made an analysis of the oxygen in the intake receiver.

The pressure was measured with engineering manometers, and the temperature with mercury thermometers. The output capacity of the compressor was measured by means of a normal diaphragm with $d$ = 40 mm and $D$ = 103 mm. For the output capacity measurements the diaphragm was placed after the pressure receiver 6. The output capacity of the compressor during long-term testing with air and oxygen was measured with circulation of the gas in a closed system. In addition, the output capacity of the compressor was measured three more times with an open system, in which the final gas pressure ranged from 3 to 15 kg/cm².

In the testing process we measured the quantity of air supplied by means of a pipe isolated from the receiver 8 (the results of the measurements are given in Table 5); the amount of air supplied when the intake tube was disconnected from the cylinder of the first stage in order to determine the influence of resistance on the intake of receiver 8 and the piping (the results of the test are shown in Table 6); the quantity of air taken in through the same diaphragm which was connected to the receiver 8 and isolated from the pressure line (the results of the measurements are shown in Table 7).

The leakage was measured periodically; the amount of leakage varied between 0.7 and 1.88 $m^3$/hr, i.e., it did not exceed 0.5% of the volume traveled through.

TABLE 5

| 1 Давление в *атм* | | Производительность $V_п$ в $м^3/ч$ при 760 *мм* рт. ст. и 0° | Коэффициент подачи $\lambda_п$ |
|---|---|---|---|
| 2 $p_к$ | 3 $p_н$ первой ступени | 4 | 5 |
| 3,0 | 2,5 | 239 | 0,86 |
| 5,0 | 2,63 | 239 | 0,86 |
| 10,0 | 2,87 | 228 | 0,82 |
| 14,0 | 2,9 | 226 | 0,813 |
| 15,0 | 2,98 | 222 | 0,797 |

1) Pressure in gage atmospheres; 2) $p_k$; 3) $p_n$ of first stage; 4) output capacity $V_p$, in $m^3$/hr at 760 mm Hg and 0°; 5) delivery coefficient, $\lambda_p$.

TABLE 6

$V_p$ and $\lambda_p$ as Functions of $p_k$

| 1 Давление в *атм* | | Производительность в $м^3/ч$ при 760 *мм* рт. ст. и 0° | Коэффициент подачи $\lambda_п$ |
|---|---|---|---|
| 2 $p_к$ | 3 $p_н$ второй ступени | 4 | 5 |
| 5,0 | 2,5 | 239 | 0,86 |
| 5,0 | 2,63 | 237 | 0,85 |
| 10,0 | 2,83 | 234 | 0,84 |
| 14,0 | 2,98 | 228 | 0,82 |
| 15,0 | 3,0 | 228 | 0,82 |

Note. The intake pipe is isolated from the first stage of the cylinder.

1) Pressure in gage atmospheres; 2) $p_k$; 3) $p_n$ of second stage; 4) output capacity, in $m^3$/hr at 760 mm Hg and 0°; 5) delivery coefficient, $\lambda_p$.

For measuring the leakage through the piston rings we set up a normal diaphragm with $d$ = 20 mm and $D$ = 53 mm.

Since the leakage was found to be slight and it was found impossible to measure the pressure drop by means of a differential manometer, the measurements were made with a gas counter. The power of the electric motor of the compressor was measured by means of Aron's circuit, and the number of rpm was measured with a hand tachometer. The analysis of the oxygen was done with a Hempel instrument.

The delivery coefficient and intake coefficient were determined from the formulas

TABLE 7

$V_{vs}$ and $\lambda_{vs}$ as Functions of $p_k$

| 1 Давление в *ати* | | Производительность $V_{вс}$ в м³/ч при 760 мм рт. ст. и 0° | Коэффициент всасывания |
|---|---|---|---|
| $p_к$ 2 | $p_к$ первой ступени 3 | 4 | 5 |
| 3,0 | 2,3 | 245 | 0,88 |
| 5,0 | 2,4 | 243 | 0,875 |
| 10,0 | 2,6 | 240 | 0,865 |
| 14,0 | 2,7 | 237 | 0,85 |
| 15,0 | 3,0 | 237 | 0,85 |

Note. The amount of air taken in, $V_{vs}$, was measured by means of a diaphragm with $d$ = 40 mm, $D$ = 103 mm.

1) Pressure in gage atmospheres; 2) $p_k$; 3) $p_n$ of first stage; 4) output capacity, $V_{vs}$, in m³/hr at 760 mm Hg and 0°; 5) intake coefficient.

$$\lambda_n = \frac{V_n}{V_0} \text{ and } \lambda_{вс} = \frac{V_{вс}}{V_0},$$

where $V_p$ is the amount of air delivered by the compressor, reduced to 0° and 760 mm Hg, in m³/hr; $V_{vs}$ is the amount of air taken in by the compressor, reduced to 0° and 760 mm Hg, in m³/hr; $V_0$ = = 0.278 is the volume traveled through by the piston of the first stage, in m³/hr.

In operation with air, the compressor was tested for 330 hr, and in operation with oxygen for 137 hr.

The average output capacity of the compressor in operation with air for 330 hr was 212.4 m³ (at 760 mm Hg and 0°) at a delivery coefficient of 0.76. The average output capacity of the compressor in operation with oxygen was 230 m³/hr (at 760 mm Hg and 0°), and the delivery coefficient was equal to 0.827.

The average basic indicators of the operation of the KPK-6 compressor during the tests conducted with air and with oxygen in a closed system are shown in Table 4.

The terminal power consumed by the electric motor was 44.8 kw at a compressor output capacity of 237 m³/hr and a final pressure of 15 kg/cm².

The measured power across the terminals of the electric motor in no-load operation was 1.62 kw.

The linear dead space in the cylinders of the machine was 2 mm in the first stage and 2.3 mm in the second stage.

The measured dead volume of the first stage was 3.5%.

It follows from Tables 5 and 6 that the loss in output capacity resulting from the resistance of the intake line at a final pressure of 15 gage atmospheres is 2%.

From Tables 5 and 7 it is possible to determine the loss due to imperfect seals in the machine and the testing unit.

At $p_k$ = 15 gage atmospheres the total gas loss is

$$\lambda_{\infty} - \lambda_n = 0{,}85 - 0{,}797 = 0{,}053, \text{ or } 5{,}3\%.$$

Since the gas loss through the piston rings does not exceed 0.5%, it follows that 5.0% of the loss is attributable to the piping and containers. The volumetric coefficient of the compressor is determined from the formula

$$\lambda_v = 1 - a\left(\tau^{\frac{1}{m}} - 1\right) = 0{,}93,$$

where $a$ = 0.035 is the ratio of the dead volume to the volume of the cylinder; $\tau$ = 4 is the degree of expansion of the gas; $m$ = = 1.2 is the exponent of the polytropic expansion curve.*

The temperature coefficient for the intake at the given degree of compression is $\lambda_t = 0{,}97$

The coefficient of pressure for the intake is $\lambda_p$ = 0.96.

Thus, the output loss of the KPK-6 compressor (in %) is:

| | |
|---|---|
| Loss due to imperfect seal..... | 5.5 |
| Loss caused by dead volume..... | 7 |
| Loss due to heating of gas..... | 3 |
| Loss due to intake resistance..... | 4 |
| Including: | |
| loss in intake piping..... | 2 |
| loss in valve and channels..... | 2 |
| Total loss..... | 19.5 |

This figure is in good agreement with the delivery coefficient $\lambda_p$ = 0.797 found above (Table 5).

The reduced value of $\lambda_p$ when the compressor was tested with air (Table 4) is attributable to leakage through the valves.

The air tests (Tables 5-7) and the $O_2$ tests (Table 4) were carried out after the valves had been checked.

When the compressor was tested with oxygen, a higher value of $\lambda_p$ was obtained, owing to the difficulty of regulating the admission of oxygen into the intake line and the creation of a certain amount of head.

The isothermal compressor power was

$$N_{из} = \frac{RTG \cdot 2.303 \lg \frac{16}{1}}{300.0 \cdot 102} = 18{,}5 \text{ kw},$$

where $R$ = 29.3 kgm/kg·deg is the gas constant for air; $T$ = 293°K is the temperature of the air intake; $G$ = 1.2·238 = 286 kg/hr is the output capacity of the compressor when the power was measured.

The no-load power concealed by the motor was 1.62 kw, amounting to 3.6%.

The power required for the electric motor under load was taken to be 5% of the total measured power.

The power at the compressor shaft was

$$T = \frac{20}{0{,}5} 100 = 4000 \text{ hr}.$$

The isothermal (external) efficiency of the compressor was

$$\eta_{из} = \frac{18.5}{42.6} = 0{,}445, \text{ or } 44{,}5\%.$$

The average wear of the graphite piston rings and guide rings is shown in Table 8.

TABLE 8

Average Wear of One Ring After 100 hr of Use when the Compressor Operated on Air and on Oxygen

| Рабочее тело 1 | Наименование колец 2 | 3 Первая ступень: Вес колец в г 5 | 3 Первая ступень: 6 Износ в г 7 | 3 Первая ступень: 6 Износ в % 8 | 4 Вторая ступень: Вес колец в г 5 | 4 Вторая ступень: 6 Износ в г 7 | 4 Вторая ступень: 6 Износ в % 8 |
|---|---|---|---|---|---|---|---|
| 9 Воздух | 10 Уплотнительное | 101,8 | 0,071 | 0,07 | 20,07* | 0,159* | 0,077* |
| | 11 Верхнее направляющее | 275 | 0,15 | 0,055 | — | — | — |
| | 12 Нижние направляющее | 356 | 0,14 | 0,04 | 130,51* | 1,33* | 1,03* |
| | 10 Уплотнительное | — | — | — | 21,2** | 0,191** | 0,09** |
| | 11 Верхнее направляющее | — | — | — | 89,45** | 1,13** | 1,27** |
| | 12 Нижнее направляющее | — | — | — | 90,07** | 1,14** | 1,27** |
| Кислород 13 | 10 Уплотнительное | 101,8 | 0,551 | 0,54 | 21,2 | 1,01 | 0,475 |
| | 11 Верхнее направляющее | 275 | 2,56 | 0,94 | 89,45 | 0,7 | 0,8 |
| | 12 Нижнее направляющее | 356 | 3,5 | 0,98 | 90,07 | 5,4 | 6,0 |

*Diameter 150 mm; operating time 221 hr.
**Diameter 140 mm; operating time 109 hr.

1) Working medium; 2) designation of rings; 3) first stage; 4) second stage; 5) weight of rings in grams; 6) wear; 7) in grams; 8) in %; 9) air; 10) packing ring; 11) upper guide ring; 12) lower guide ring; 13) oxygen.

The rings of the first stage operated with air for 330 hr and with oxygen for 137 hr, making a total of 467 hr. The 105-mm diameter rings of the second stage operated with air for 221 hr; the 140-mm diameter rings of the second stage (second variant) operated with air for 109 hr and with oxygen for 137 hr, making a total of 246 hr. In order to improve the pressure distribution, the 150-mm cylinder bushing of the second stage, together with the piston and rings, was replaced after 221 hr of operation with a 140-mm diameter bushing.

When the compressor operated with air, the average wear of the packing rings of the first stage after 100 hr of operation was 0.07%, and the average for the second stage varied from 0.077 to 0.09%.

When the compressor operated with oxygen, the wear of the rings became somewhat greater: after 100 hr of operation the value in the first stage went up to 0.54%, and the value in the second stage up to 0.47%.

The increased wear of the guide rings of the first-stage and second-stage pistons is attributable to the fact that they absorb all lateral forces arising as a result of any axial misalignment of the cylinders with the piston rods and crossheads.

The increased wear of the graphite piston rings (packing rings) when the compressor operated with oxygen is attributable to the extreme dryness of the oxygen beam compressed. Unfortunately, this problem was not investigated during the testing of the KPK-6 compressor.

According to data gathered outside the USSR, a small amount of moisture in the gas being compressed reduces the wear of the graphite piston rings.

Let us calculate, on the basis of the data obtained, a tentative service lifetime for graphite piston rings when the compressor operates with oxygen and the average ring wear is 0.5% per 100 hr of operation; we shall assume that the maximum admissible ring wear is 20%:

$$N = 44{,}8 \cdot 0{,}95 = 42{,}6 \text{ kw}.$$

The following conclusions may be drawn from the results of the tests performed on the KPK-6 compressor:

1. The operation of the graphite piston packings may be considered satisfactory: the amount of gas leaking through the piston rings was less than 0.5%; the wear of the compressor piston rings in air operation after 100 hr was 0.07 to 0.09%, and in oxygen operation after 100 hr approximately 0.5%.

With this wear value, we may assume that the service lifetime of the piston rings will be 4000-6000 hr.

2. The good operation of the piston packings and valves, as

well as the small amount of dead volume, made it possible to obtain a high delivery coefficient.

3. The high wear of the guide rings is attributable to the axial misalignment of the pistons and cylinders. The hinge joints supplied for joining the piston rods to the pistons did not adequately compensate the axial misalignment between the cylinders and the pistons.

4. A compressor with graphite packings requires greater care in fabrication than compressors with metal piston rings.

5. The operation of self-expanding band valves in the compressor was satisfactory; during the test period we observed no breaks in the plates, no appreciable wear of their limiters or of the plates themselves; the tightness of the valves was also within the range of the acceptable standards.

6. For compressors with a delivery pressure of 16 atm abs or higher, we may recommend 2P-1000 graphite, which showed good resistance to wear. However, it is highly rigid and brittle, so that it is difficult to work.

For compressors with a delivery pressure of up to 10 atm abs, we may recommend brands D and Ye graphites of the Electrode Plant, which are less brittle and are more easily worked, and which are also much less expensive than 2P-1000 graphite.

## Footnotes

| Manuscript Page No. | |
|---|---|
| 41 | VNIIKIMASh Note, "Testing of Graphite Packings on the 2R-3/220 and SA-8 Compressors (inv. No. 715). |
| 44 | For details of the tests conducted on the KPK-6, see VNIIKIMASh Note, "Tests of the KPK-6 Oxygen Compressor (inv. No. 716)." |
| 48 | M.P. Frenkel', Porshnevyye kompressory [Piston Compressors], Mashgiz, 1949, page 33. |

## Transliterated Symbols

| | |
|---|---|
| 28 | нач = nach = nachal'noye = initial |
| 28 | КПК = KPK = kislorodnyy porshnevoy kompressor = piston-type oxygen compressor |
| 28 | ВНИИХИМАШ = VNIIKIMASh = Vsesoyuznyy nauchno-issledovatel'skiy institut kislorodnogo mashinostroyeniya = All-Union Scientific Research Institute of Oxygen Machinery Construction |

42 к = k = kazhushchiy = apparent; = konechnyy = final

45 п = p = podacha = delivery

47 вс = vs = vsasyvaniye = intake, aspiration

49 из = iz = izotermicheskiy = isothermal