AD 680806

SYNTHETIC-APERTURE OPTICS
VOLUME 1
WOODS HOLE SUMMER STUDY
AUGUST 1967

JAN 22 1969

Advisory Committee to the
Air Force Systems Command

NATIONAL ACADEMY OF SCIENCES
NATIONAL RESEARCH COUNCIL

CLEARINGHOUSE

95

SYNTHETIC-APERTURE OPTICS

VOLUME 1

WOODS HOLE SUMMER STUDY

AUGUST 1967

Advisory Committee to the
Air Force Systems Command

NATIONAL ACADEMY OF SCIENCES
NATIONAL RESEARCH COUNCIL

PAGES _____

ARE

MISSING

IN

ORIGINAL

DOCUMENT

ADVISORY COMMITTEE TO THE AIR FORCE SYSTEMS COMMAND

Brian O'Brien, North Woodstock, Connecticut, Chairman
Richard G. Folsom, Rensselaer Polytechnic Institute
William R. Sears, Cornell University
Oswald G. Villard, Jr., Stanford University
Willis H. Ware, The RAND Corporation
Kenneth S. McAlpine, Executive Secretary

OPTICAL MASER PANEL

Stephen M. MacNeille, American Optical Company, Chairman
John K. Galt, Bell Telephone Laboratories, Inc.
Brian O'Brien, North Woodstock, Connecticut

Carroll O. Alley, Jr., University of Maryland, Consultant

Copies available from

Defense Documentation Center
Cameron Station
Alexandria, Virginia

The investigation of the size and structure of the heavenly bodies is limited by the resolving power of the observing telescope. When the bodies are so small or so distant that this limit of resolution is passed, the telescope can give no information concerning them. But an observation of the visibility curves of the interference fringes due to such sources, when made by the method of the double slit or its equivalent, and properly interpreted, gives information concerning the size, shape, and distribution of the components of the system. Even in the case of a fixed star, which may subtend an angle of less than one-hundredth of a second, it may not be an entirely hopeless task to attempt to measure its diameter by this means.

A. A. Michelson, *Light Waves and Their Uses*, The University of Chicago Press, Chicago, 1903, pp. 144, 145.

PARTICIPANTS AND VISITORS

DIRECTOR

Joseph W. Goodman
Stanford University, Stanford, California

GROUP COORDINATORS

David D. Cudaback
University of California, Berkeley, California

Craig K. Rushforth
Institute for Defense Analyses, Arlington, Virginia

Jerry S. Zelenka
University of Michigan, Ann Arbor, Michigan

FULL-TIME PARTICIPANTS

Justin L. Kreuzer
The Perkin-Elmer Corporation, Wilton, Connecticut

Steven H. Lerman
Itek Corporation, Lexington, Massachusetts

David A. Markle
The Perkin-Elmer Corporation, Wilton, Connecticut

Richard H. Miller
University of Chicago, Chicago, Illinois

W. Duane Montgomery
Institute for Defense Analyses, Arlington, Virginia

George D. Reynolds
Technical Operations, Inc., Burlington, Massachusetts

David H. Rogstad
California Institute of Technology, Pasadena, California

George A. Taylor
Air Force Avionics Laboratory, Wright-Patterson Air Force Base, Dayton, Ohio

Raoul F. van Ligten
American Optical Company, Southbridge, Massachusetts

PART-TIME PARTICIPANTS

Carroll O. Alley, Jr.
University of Maryland, College Park, Maryland

Ronald N. Bracewell
Stanford University, Stanford, California

Richard S. Cesaro
Advanced Research Projects Agency, Department of Defense, Washington, D. C.

Douglas G. Currie
University of Maryland, College Park, Maryland

Edward C. Field, Jr.
The RAND Corporation, Santa Monica, California

B. Roy Frieden
University of Arizona, Tucson, Arizona

John K. Galt
Bell Telephone Laboratories, Inc., Murray Hill, New Jersey

Leo Goldberg
Harvard University, Cambridge, Massachusetts

Jacob J. Gustincic
University of California, Los Angeles, California

James L. Harris, Sr.
University of California, San Diego, California

Harold S. Hematreet
The Perkin-Elmer Corporation, Wilton, Connecticut

Lewis M. Hobbs
Yerkes Observatory, Williams Bay, Wisconsin

Robert E. Hopkins
University of Rochester, Rochester, New York

Sherman Karp
National Aeronautics and Space Administration, Lexington, Massachusetts

Robert H. Kingston
Lincoln Laboratory (MIT), Lexington, Massachusetts

Emmett N. Leith
University of Michigan, Ann Arbor, Michigan

Adolf W. Lohmann
International Business Machines Corporation, San Jose, California

Stephen M. MacNeille
American Optical Company, Southbridge, Massachusetts

Aden B. Meinel
University of Arizona, Tucson, Arizona

Alan T. Moffet
California Institute of Technology, Pasadena, California

Robert W. Noyes
Harvard University, Cambridge, Massachusetts

Brian O'Brien
North Woodstock, Connecticut

Edward L. O'Neill
Worcester Polytechnic Institute, Worcester, Massachusetts

Paul L. Pryor
Air Force Avionics Laboratory, Wright-Patterson Air Force Base,
Dayton, Ohio

Albert M. Rubenstein
Institute for Defense Analyses, Arlington, Virginia

William C. Schoonover
Air Force Avionics Laboratory, Wright-Patterson Air Force Base,
Dayton, Ohio

Robert R. Shannon
Itek Corporation, Lexington, Massachusetts

George W. Swenson, Jr.
National Radio Astronomy Observatory, Charlottesville, Virginia

Oswald G. Villard, Jr.
Stanford University, Stanford, California

John L. Walsh
Institute for Defense Analyses, Arlington, Virginia

Adriaan Walther
Diffraction Limited, Bedford, Massachusetts

Janusz S. Wilczynski
International Business Machines Corporation, Yorktown Heights, New York

VISITORS (Less than one week participation)

Myron Block
Block Associates, Inc., Cambridge, Massachusetts

Louis J. Cutrona
Conductron Corporation, Ann Arbor, Michigan

Tor Hagfors
Lincoln Laboratory (MIT), Lexington, Massachusetts

Leonard Mandel
University of Rochester, Rochester, New York

Lawrence Mertz
Block Associates, Inc., Cambridge, Massachusetts

Bruce C. Murray
California Institute of Technology, Pasadena, California

Max Nagel
National Aeronautics and Space Administration, Lexington, Massachusetts

Robert Nathan
Jet Propulsion Laboratory, Pasadena, California

Thomas J. Skinner
Technical Operations, Inc., Burlington, Massachusetts

Luther Smith
American Optical Company, Southbridge, Massachusetts

John Winthrop
American Optical Company, Southbridge, Massachusetts

PREFACE

The Woods Hole Summer Study on Synthetic-Aperture Optics was held at the National Academy of Sciences - National Research Council Summer Studies Center at Woods Hole, Massachusetts, during the period 7 August through 1 September 1967. The study was intiated by the Optical Maser Panel of the Advisory Committee to the Air Force Systems Command of the National Academy of Sciences - National Research Council, and the work was supported by the Air Force Systems Command under an amendment to Contract F 18600-67-C-0071.

During the winter of 1966-1967, attention was devoted by members of the Optical Maser Panel to the possibility of using aperture synthesis techniques at optical frequencies. The concern of the Panel was motivated by present limitations on useful aperture size, as dictated by both cost and fabrication technology. An excellent example of the capabilities of the current state of the art in large aperture optical systems is the 100 inch (F.6) collimator to be installed at the U.S. Air Force Avionics Laboratory Optics Facility. The cost of the 100 inch mirror alone was in excess of two million dollars, and the fabrication time exceeded two years. In view of the present limitations, the Panel considered it important to explore whether alternative means might be available for obtaining precise optical information without pressing close to the ultimate limits of size, weight, cost, and technical feasibility, as dictated by current high-resolution systems.

That alternative methods of viewing distant objects might be feasible was suggested by recent advances in two nonoptical technologies: (1) the highly successful use of synthetic-aperture radars at microwave frequencies, yielding

resolutions far in excess of those available from a single antenna of practical dimensions, and (2) the well-developed aperture synthesis interferometric techniques now widely exploited in the field of radio astronomy.

It is significant that much of the motivation for the study was provided by microwave-frequency techniques. Indeed it was clear at the time the plans for the study were initiated that little in the way of ongoing research in optical aperture synthesis was underway. The Optical Maser Panel felt the potential importance of these techniques to be sufficiently great to warrant attention by a wider variety of competent people.

To this end, the Academy agreed to sponsor, and the Air Force Systems Command to support, a four-week study by a group of research scientists from universities, industrial laboratories, and government, representing skills in radio and optical astronomy, microwave radar, optical design, laser physics, holography, electromagnetic theory, information theory, and related disciplines. Ultimately the working group consisted of about 15 scientists with a total of 56 on hand at one time or another.

In order to accomplish anything definite in the short span of four weeks, certain simplifying assumptions were deemed acceptable for the study. Specifically, the following assumptions were considered allowable, when necessary:

(1) The objects of concern may be assumed of limited extent, subtending a diameter of as few as perhaps 10 resolution cells of the synthesized system.

(2) The transmission medium may be assumed to be turbulence-free, as encountered outside the earth's atmosphere.

(3) The ranges of concern may be assumed sufficiently short to allow the use of active illumination.

Within these limitations, situations of practical importance are still included, such as satellite-to-satellite imaging. It was realized, of course, that such restrictions are unrealistic in many applications and that some estimate of the limitations imposed by object size, distance, and atmospheric "seeing" would be desirable. In many cases such estimates were possible; the class of problems treated was, in fact, far broader than the above simplifications would have allowed.

A considerable effort was made to obtain participation of both radio and optical astronomers in the study. The primary reason for doing so was the conviction that much stimulation and knowledge could be gained from the experience of astronomers with aperture synthesis at longer wavelengths. It is the opinion of the Director that this conviction was amply borne out in the course of the study, and the reader may judge for himself from the material presented in this

report. A second motivation for encouraging this participation was the realization that the development of synthetic-aperture optical systems would benefit not only the military, but also the astronomical community. It is quite possible that some of the most significant benefits will be in the field of astronomy.

The following report and appendixes represent the result of the Summer Study. Volume 1, which is a summary of the techniques proposed and considered at the study, was written by the Director, drawing heavily on material written by the participants. The good qualities of this volume are reflections on the competence and enthusiasm of the participants; the Director accepts responsibility for any shortcomings. Volume 2 is a collection of appendixes, written by the participants and edited by the Director, describing the various aperture-synthesis techniques in more detail. A classified (SECRET) supplement to Volume 2, concerned with optical synthetic-aperture radar techniques, has also been prepared and is available to qualified requestors.

It is important to mention that even on the last day of the study, new approaches to the aperture-synthesis problem were proposed. This fact suggests that the present report cannot be regarded as a final and complete survey of synthetic-aperture optics. It is quite improbable that a study of only four weeks duration could exhaust the subject matter in a field so new and little explored as that considered here; it did, however, succeed in making a broad sweep across the subject matter. If new techniques are conceived as a result of the stimulation provided by the study, the effort represented here will have been all the more worthwhile.

Enthusiasm and willingness to work were exhibited by all participants in the study. Although it would be difficult to single out any for individual praise, special mention must be made of David D. Cudaback, who served as coordinator of the interferometry group, by far the largest group in the study.

Thanks are also due for the technical cooperation and support of the Air Force Avionics Laboratory, as represented at Woods Hole by George A. Taylor, Paul L. Pryor, and William C. Schoonover.

Particular credit is owed to Kenneth S. McAlpine, Executive Secretary of the Advisory Committee to the Air Force Systems Command, for his energetic and enthusiastic handling of the multitude of administrative matters connected with setting up and running the summer study. In addition, thanks are due to the staff of the NAS-NRC Summer Studies Center at Woods Hole; to the hard-working secretaries who produced the original typescript; and to Barbara Stusse who typed most of the equations in the original typescript and who produced the majority of the final document for printing. To them, and to everyone who supported the summer study, we express our gratitude.

CONTENTS

1 I. INTRODUCTION

1 A. Purpose and Scope of the Study

2 B. General Topics Considered

2 C. Reference

3 II. INTERFEROMETRY

3 A. Basic Principles

3 1. The Complex Degree of Coherence

4 2. The Complex Visibility Function

5 3. The van Cittert-Zernike Theorem

6 B. The Michelson Stellar Interferometer

6 1. Configuration of the Interferometer

8 2. Information Obtainable from the Measurements

10 3. An Alternative Interferometer Configuration

11 C. Sampling the Visibility Function

11 1. Economical Sampling with a Two-Element Interferometer

15 2. Multielement Interferometers

18 D. Nonrigid Structures and the Time-Delay Problem

22 E. Coherent vs Incoherent Detection

23 F. Atmospheric Seeing and its Effect on Interferometers

25 G. A Technique for eliminating the Effects of Atmospheric Seeing

26 1. The Basic Principle

28 2. The Isoplanatic Condition

29 3. Application to the Time-Delay Problem

30 H. The Question of Sensitivity

32 1. A Technique for Utilizing Large Apertures
32 2. Quantitative Data on Sensitivity
33 I. Intensity Interferometry
33 1. Basic Procedure
35 2. Limitations of Intensity Interferometry
35 3. Laser Illumination and Three-Element Intensity Interferometry
36 J. Astronomical Needs for High Angular Resolution
37 K. Discussion
39 L. References

41 III. FEEDBACK-CONTROLLED OPTICS
42 A. The Basic Approach
47 B. Experimental Results to Date
47 C. Discussion

49 IV. IMAGING WITH PARTIALLY FILLED APERTURES
49 A. Some General Properties of Partially Filled Apertures
49 1. Comparison with Interferometry
50 2. Comparison of Filled and Partially Filled Apertures
52 3. Atmospheric Limitations
52 B. Some Examples of Partially Filled Apertures
52 1. Rotating Strip Telescope
54 2. Optical Tee Aperture
54 3. Analogs of the Covington-Drane and Mills-Cross Antennas
54 C. Temporal Synthesis of a Filled Aperture with a Double-Objective Telescope
55 1. The Double-Objective Telescope
55 2. Telescope Alignment
58 3. Data Processing
59 D. Combination of Active Figure Control with Partially Filled Aperture Techniques

61 V. APERTURE SYNTHESIS WITH COHERENT ILLUMINATION
61 A. The Active Interferometer
63 1. Principle of the Technique
63 2. Advantages and Practical Difficulties
65 B. Doppler-Spread Imaging
65 C. Holographic Arrays

69 D. Optical Synthetic-Aperture Radars
69 1. Basic Principles
71 2. Practical Difficulties at Optical Frequencies
73 E. References

75 VI. OBJECT RESTORATION BEYOND THE DIFFRACTION LIMIT
75 A. Noiseless Object Restoration
77 B. Object Restoration with Noise
79 C. References

81 VII. MISCELLANEOUS APERTURE SYNTHESIS TECHNIQUES

83 VIII. CONCLUSIONS AND RECOMMENDATIONS
83 A. Interferometry
85 B. Feedback-Controlled Optics and Partially Filled Apertures
86 C. Aperture Synthesis with Coherent Illumination
87 D. Research in Other Areas

I
INTRODUCTION

A. PURPOSE AND SCOPE OF THE STUDY

The most fundamental limitation to the resolving power of any optical system is diffraction of light by the finite size of the primary collector. In practice this limitation is often not reached, for imperfections of the optical components may introduce fixed wavefront aberrations, and atmospheric turbulence may introduce dynamic distortions, both of which restrict resolution to less than the "diffraction limit." Nonetheless, with sufficient cost, time, and care, it is possible to manufacture large-aperture corrected optical systems which are, for all practical purposes, free from fixed aberrations. Furthermore, in space applications, or in earth-based applications which utilize appropriate image processing,[1] atmospheric effects can be negligible and diffraction-limited performance can be closely approached.

Thus for a large class of problems, the primary limit to resolution is aperture size. In such cases, the most obvious means to obtain higher resolution is the construction of larger diffraction-limited optics. However, as aperture size is increased, a number of factors make further increases less and less attractive. First, the sheer weight and size of the optics make their deployment all the more difficult. Second, the cost and time associated with the fabrication of large-aperture systems soon become prohibitive for many applications. It is therefore important to consider alternative means for obtaining high resolution without the necessity of constructing ever-larger optical components.

The purpose of the present study is to consider the feasibility of increasing optical resolution by what may be termed synthetic-aperture optics. This term is defined here in a very broad sense to include any technique for achieving, with one or more small apertures, the resolution normally associated with a single large aperture.

To date, the largest body of experience with aperture synthesis has been in the microwave region of the spectrum, where synthetic-aperture radars and radio-astronomy telescope arrays have been used for a number of years. It is significant that most previous experience has been at microwave frequencies, for indeed the primary technical difficulties associated with optical aperture synthesis can be traced to the minute size of optical wavelengths, typically some five orders of magnitude shorter than microwave wavelengths.

It should be emphasized at the start that the field of synthetic-aperture optics is very new and relatively unexplored. To our knowledge, the present report represents the first organized investigation of the field. As such, it cannot be considered as a final treatise on the subject. Rather, we have set more modest and realistic goals as follows: (1) to delineate the various approaches to the problem of optical aperture synthesis, as far as our present knowledge will allow; (2) to specify the advantages and limitations of these various approaches; and (3) to point out areas of technology which require further attention if the full potentials of synthetic-aperture optics are to be realized.

B. GENERAL TOPICS CONSIDERED

Volume 1 contains a connected account of the results of the summer study and employs a minimum of mathematics. The various approaches to optical aperture synthesis have been divided into six classes, as follows:

(1) Interferometry
(2) Feedback-Controlled Optics
(3) Imaging with Partially Filled Apertures
(4) Aperture Synthesis with Coherent Illumination
(5) Object Restoration beyond the Diffraction Limit
(6) Miscellaneous Aperture Synthesis Techniques

In several cases a given technique could be placed logically in any of two or more of these categories, and in such cases we have chosen that particular category which seemed to us to be most appropriate.

C. REFERENCE

1. "Restoration of Atmospherically Degraded Images," Woods Hole Summer Study, July 1966, National Academy of Sciences - National Research Council, Washington, D. C.

II
INTERFEROMETRY

A. BASIC PRINCIPLES

The oldest embodiments of the principles of optical aperture synthesis are found in the field of interferometry. For completeness, and for the purpose of establishing notation, we first briefly review the properties of interference phenomena.[1] (The reader may consult Appendix I by E. L. O'Neill for further background material.)

1. The Complex Degree of Coherence

Suppose that, as a result of some distant source or system of sources, there exists across a certain plane a statistically stationary optical wave. Neglecting polarization effects (which can be included without changing the basic results to follow), we may represent the wave by a complex-valued time-varying amplitude $V(\vec{x}, t)$, which is a function of position $\vec{x}$ in the plane and of time t.

The quantity of chief interest in interferometry experiments is the complex degree of coherence,* $\gamma(\vec{s};\tau)$. This quantity is defined in terms of the time-averaged product of the field amplitudes at positions $\vec{x}_1$ and $\vec{x}_2$ separated by vector spacing $\vec{s}$, and at time instants t_1 and t_2 separated by delay τ.

*The complex degree of coherence is simply a normalized version of the somewhat better known "mutual coherence function" introduced by Wolf.

$$\gamma(\vec{s};\tau) = \frac{\langle V(\vec{x}_1, t_1)\, V^*(\vec{x}_2, t_2)\rangle}{\langle |V(\vec{x}_1, t_1)|^2\rangle^{1/2}\ \langle |V(\vec{x}_2, t_2)|^2\rangle^{1/2}} \tag{1}$$

where the angle brackets signify an infinite time average.

The complex degree of coherence has a direct physical interpretation in terms of the Young's interference experiment illustrated in Figure 1. Let S be an arbitrary source, and suppose that two pinholes are pierced at points $\vec{x}_1$ and $\vec{x}_2$ in an otherwise opaque screen. The intensity of the light observed at a point P behind the screen can be expressed as

$$I(P) = I_1 + I_2 + 2\sqrt{I_1 I_2}\ \mathrm{Re}\,\{\gamma(\vec{s};\tau)\} \tag{2}$$

where I_1 and I_2 are the intensities that would be produced by the light from the two pinholes individually, τ is the relative delay introduced by the difference in propagation times over the paths from $\vec{x}_1$ and $\vec{x}_2$ to P, and Re { } signifies "real part of."

As indicated in Figure 1, the pattern of interference consists of relatively fine fringes under a coarse spatial envelope. The envelope begins to fall appreciably when the delay time τ approaches a value equal to the reciprocal of the optical bandwidth. The fine structure changes by one full period when τ changes by a period of the optical oscillation.

2. The Complex Visibility Function

When the optical wave is quasi-monochromatic (i.e., narrowband) and when τ is much smaller than the reciprocal of the optical bandwidth, the complex degree of coherence may be written

$$\gamma(s;\tau) = \mathcal{V}(\vec{s})e^{i2\pi\bar{\nu}\tau} \tag{3}$$

where $\bar{\nu}$ is the mean optical frequency and $\mathcal{V}(\vec{s})$ will be referred to here as the complex visibility function (also known as the "mutual intensity"). The modulus $|\mathcal{V}(\vec{s})|$ of the complex visibility function may be identified as the "visibility" of the fringes in the usual sense; that is,

$$|\mathcal{V}(\vec{s})| = \frac{I_{max} - I_{min}}{I_{max} + I_{min}} \tag{4}$$

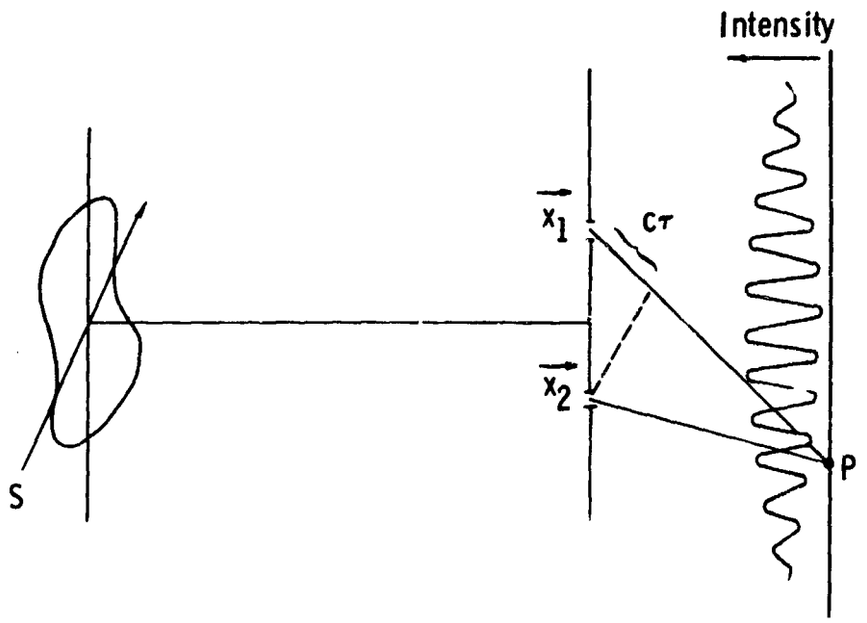

Figure 1. Young's interference experiment.

where I_{max} and I_{min} signify the maximum and minimum intensities of the fringes for the given spacing $\vec{s}$. Similarly the phase of the complex visibility function is identical with the spatial phase of the sinusoidal fringe pattern, relative to the phase of the fringe pattern produced by a monochromatic point source of frequency $\bar{\nu}$, located equidistant from points $\vec{x}_1$ and $\vec{x}_2$.

When the delay τ becomes comparable with the reciprocal of the optical bandwidth, the visibility of the fringes drops and the fringe structure begins to disappear. If the spectral width of the source is very great (i.e., the light is "white"), then only a few interference fringes exist, and it is important that τ be very close to zero if interference effects are to be observed.

3. The van Cittert-Zernike Theorem

Aside from the basic definitions above, the relation of most importance to us here is the so-called van Cittert-Zernike theorem, which relates the complex visibility function to the normalized brightness distribution of the source. Consider an incoherent source, i.e., a source on which each point is radiating independently, and let $I(\vec{u})$ represent the intensity of that source

at point $\vec{u}$ on the plane, where $I(\vec{u})$ is normalized such that $\int I(\vec{u})\, d\vec{u}$ equals unity. The function $I(\vec{u})$ so defined is called the "brightness distribution" of the source; it is the quantity which we attempt to determine when we form an image of the source. The van Cittert-Zernike theorem is simply a statement of a rather elegant relationship that exists between $\mathcal{V}(\vec{s})$ and $I(\vec{u})$; namely, the two functions form a Fourier transform pair. Thus

$$\mathcal{V}(\vec{s}) = \int I(\vec{u}) e^{-i\vec{u}\cdot\vec{s}}\, d\vec{u} \tag{5}$$

and

$$I(\vec{u}) = \frac{1}{2\pi} \int \mathcal{V}(\vec{s})\, e^{i\vec{u}\cdot\vec{s}}\, d\vec{s} \tag{6}$$

where, to take care of scaling factors that would otherwise arise, $\vec{s}$ is interpreted as the spacing of the two pinholes measured in wavelengths, and $\vec{u}$ is interpreted as an angular position measured in radians from the normal to the line joining $\vec{x}_1$ and $\vec{x}_2$ in Figure 1.*

It should be emphasized that these relations hold only for an incoherent source. When the source is partially coherent, there exists another (unique) relationship between the complex degree of coherence at the source and the complex degree of coherence in the $\vec{x}$ plane. Thus it is still possible to determine the brightness distribution $I(\vec{u})$ from the measured complex visibility function $\mathcal{V}(\vec{s})$, but not with the simple relation (6). This fact should be kept in mind when any laser illumination system is considered, but we do not pursue the point further here. The interested reader may consult any of the existing detailed treatments of coherence theory (e.g., see Ref. 1).

B. THE MICHELSON STELLAR INTERFEROMETER

1. Configuration of the Interferometer

The stellar interferometer discussed by Michelson[2] and successfully used by Michelson and Pease[3] and subsequently by Pease[4] is the first historical example of an optical aperture synthesis instrument. The interferometer is

*Strictly speaking, the relations (5) and (6) are valid only when the object of interest lies in the far field of the measurement aperture in the $\vec{u}$ plane. For some military applications this condition will not hold, and the relations must be slightly modified to yield correct results.

essentially a reconfiguration of the Young's interference experiment, as indicated in Figure 2. A crossbeam mounted at the upper end of a telescope carries a pair of mirrors to sample the incoming wavefront and to bend the light into two pencil beams traveling toward the telescope axis. Near the axis the pencil beams are redirected onto the telescope by two mirrors and merged by the telescope optics in a region where the interference pattern may be observed. From the amplitude and relative phase of the fringe pattern observed near the telescope axis, it is possible to determine the complex visibility $V(\vec{s})$, where $\vec{s}$ is the vector spacing of the two mirrors and may considerably exceed the physical dimensions of the telescope aperture.

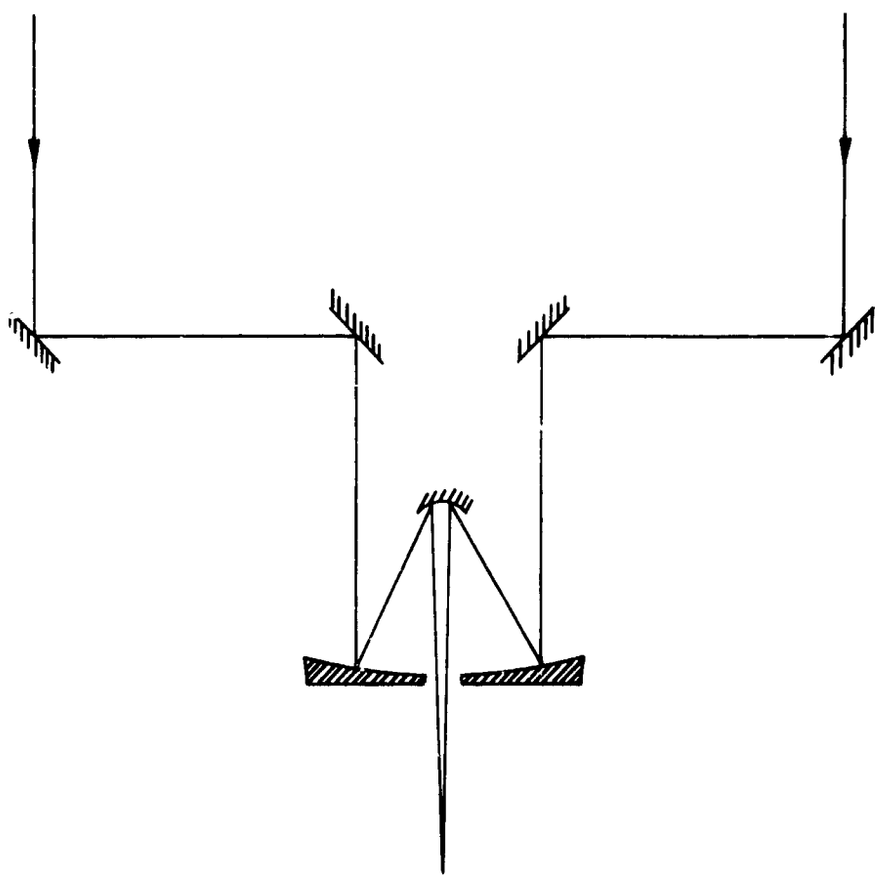

Figure 2. Michelson stellar interferometer.

2. Information Obtainable from the Measurements

The Michelson stellar interferometer may be used with varying degrees of complexity, depending on how much information one wishes to extract from the measurements. In order of increasing complexity, the possibilities are as follows:

(1) Determine the particular spacing at which the first zero of the visibility occurs;

(2) Measure the amplitude $|\mathcal{V}(\vec{s})|$ of the complex visibility over an entire range of spacings; or

(3) Measure both the amplitude and the phase of the complex visibility over an entire range of spacings.

A common use of the interferometer is measurement of stellar diameters, for which only knowledge of the spacing at the first zero of the visibility function is required. The assumption here is that the object is a uniformly bright circular disk, in which case the angular diameter Δu of the disk is given by

$$\Delta u = \frac{1.22}{s_o} \tag{7}$$

where s_o is the spacing (in wavelengths) at which the fringe visibility first vanishes.

A more ambitious undertaking, with correspondingly richer rewards, is the measurement of $|\mathcal{V}(\vec{s})|$ over an entire range of spacings. However, even this more complete information is insufficient to determine the brightness distribution in most cases. Exceptions are symmetrical objects, which by virtue of a fundamental property of the Fourier transform in Eq. (5), have entirely real visibility functions (aside from a linearly increasing phase shift which depends only on the source position). If $\mathcal{V}(\vec{s})$ is both real and positive, then measurement of $|\mathcal{V}(\vec{s})|$ alone is sufficient to determine the brightness distribution. For objects lacking this property, only the autocorrelation function of the brightness distribution can be determined from $|\mathcal{V}(\vec{s})|$ (or, more accurately, from $|\mathcal{V}(\vec{s})|^2$). Nonetheless, this limited information can still be useful, particularly if considerable a priori knowledge about the object exists. It should also be mentioned that work is currently under way to determine if, for bounded objects, the analyticity of $\mathcal{V}(\vec{s})$ can be used to uniquely recover the phase from measurements of the amplitude alone. To our knowledge, this work is not yet complete, and we are therefore unable to report on this point further.

The highest degree of complexity is encountered when both the amplitude and the phase of $\mathcal{V}(\vec{s})$ are to be extracted, thus allowing direct determination

of the brightness distribution. In the absence of atmospheric "seeing" effects,* the complex visibility data can in principle be gathered in any of several ways. The method which is most straightforward conceptually is to place a broadband optical frequency translator in one arm of the interferometer. If the device produces the same frequency translation for all frequency components (to be contrasted, for example, with the frequency-dependent offsets introduced by doppler shifting with a moving mirror), the fine fringes will move with constant velocity under the stationary coarse envelope of the interference pattern. Let the moving fringes fall on a barred grid ("picket fence") having a spatial period equal to the spacing of the fringes. If the light transmitted through the grid is collected on a detector, the resulting photocurrent will contain a component of the form

$$i(t) = A \sin(\omega t + \psi) \tag{8}$$

where ω is the frequency translation introduced, while A and ψ may be identified as the amplitude and phase of the visibility function $\mathcal{V}$ for the particular spacing used. Both A and ψ can be measured by standard electronic techniques.

While the frequency-translation method of measuring visibility phase is conceptually simple, it is not the simplest practical method of extracting the data. A broadband, low-loss frequency translator of the type required is not an off-the-shelf component, and would require a significant developmental effort. Ultimately some relaxation of the bandwidth requirements would probably be required, and a sacrifice of instrument sensitivity would result.

An alternative method for measuring visibility phase utilizes two quadrature picket-fence detectors and requires no frequency translator. Currents of the form A sin ψ and A cos ψ are thereby generated; from them the values of A and ψ can be recovered.**

A third method for measuring visibility phase utilizes a modified detection geometry, and will be discussed in some detail in Section 2B.3 to follow.

Once the amplitude and phase of $\mathcal{V}$ have been determined over a range of spacings, a simple Fourier transformation yields the brightness distribution of the object, which is the information of ultimate interest. With reference to Eq. (5), the measurement of complex visibility at any one spacing is entirely equivalent to determining the amplitude and phase of one particular spatial frequency component of the object; a spacing of $\vec{s}$ wavelengths corresponds precisely to a spatial frequency of $\vec{s}$ cycles per radian of angle.

---

*Seeing effects are considered in a later section.

**For a more detailed discussion of this technique, see Appendix IX by D.H. Rogstad

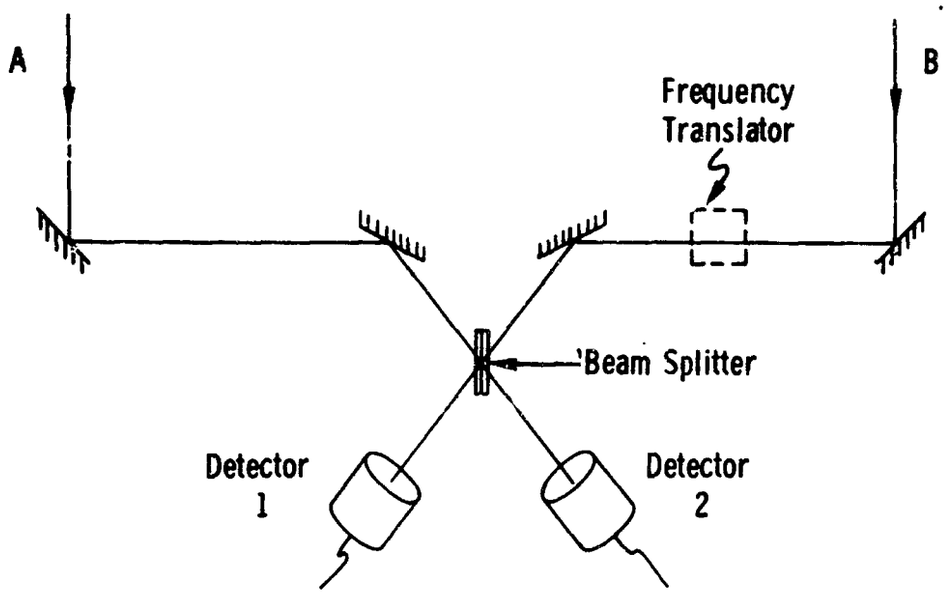

Figure 3. Modified detection scheme.

Thus if both amplitude and phase are extracted from the visibility measurement, the interferometer, coupled with appropriate post detection Fourier-transforming equipment, may be regarded as comprising an image-forming instrument.

3. An Alternative Interferometer Configuration

The original configuration of the Michelson interferometer (Figure 2) is by no means the only possible configuration. An alternative geometry, which employs a Mach-Zehnder interferometer and two detectors,* is shown in Figure 3. In this case the beams are combined without focusing.

The operation of this interferometer may be understood with the help of Figure 3. Note that to reach detection 1, beam A is reflected at the beam splitter while beam B is transmitted through. On the other hand, to reach detector 2, beam A is transmitted and beam B is reflected. If the difference between the phase changes introduced by reflection and transmission at the

*It is believed that the scheme described here is similar to that currently being used by H. A. Gebbie and R. Q. Twiss. For further consideration of this detection scheme, the reader may consult Appendix II by D. G. Currie.

beam splitter is Δ radians, then the interference patterns at detectors 1 and 2 have a 2Δ-radian phase difference. As a consequence, the currents generated by detectors 1 and 2 may be written

$$\begin{aligned} i_1(t) &= A \sin \psi \\ i_2(t) &= A \sin (\psi + 2\Delta) \end{aligned} \tag{9}$$

where A and ψ are again the amplitude and phase of the visibility function for the particular spacing used.

Two special cases are of interest. First, when $\Delta = \pi/4$ radians, the currents generated are A sin ψ and A cos ψ, from which A and ψ can be determined. Alternatively, if only the presence or absence of fringes is to be determined (as required for example, in measuring source diameter), the choice $\Delta = \pi/2$ has certain advantages. In such a case, when completely constructive interference occurs at detector 1, then completely destructive interference occurs at detector 2. In the presence of atmospheric seeing effects, fringes may be detected by looking for simultaneous occurrences of high and low outputs from the two detectors, as discussed in more detail in Appendix II by D. G. Currie.

C. SAMPLING THE VISIBILITY FUNCTION

Determination of the brightness distribution $I(\vec{u})$ requires measurement of the visibility function $\mathcal{V}(\vec{s})$ over an entire range of spacings. The maximum available spacing $|\vec{s}|_{max}$, determined by the finite size of the instrument, limits the final resolution. However, within the finite range of spacings available, some form of sampling $\mathcal{V}(\vec{s})$ at discrete values of $\vec{s}$ must be employed. Such considerations are well developed in the field of radio astronomy, and we draw on that body of knowledge here.*

1. Economical Sampling with a Two-Element Interferometer

For the moment we reduce the imaging problem to one dimension, replacing the vector quantities $\vec{s}$ and $\vec{u}$ by scalars s and u. An important quantity to determine is the maximum spacing increment Δs which may be used as a sampling interval while still allowing full reconstruction of I(u). The answer to this question is provided by the so-called Nyquist criterion, which states that a function with a Fourier transform extending from $-\frac{u_{max}}{2}$ to $+\frac{u_{max}}{2}$ may be reconstructed exactly from samples spaced no wider than

*A more detailed discussion of radio astronomy techniques is presented in Appendix III by D. D. Cudaback and D. H. Rogstad.

$$\Delta s = \frac{1}{u_{max}} \tag{10}$$

Thus if an object is known to have a brightness distribution which is nonzero over an angular region no wider than u_{max} radians, the visibility function of that object may be determined from samples taken at $(u_{max})^{-1}$ wavelength intervals. The samples of V may be regarded as discrete Fourier coefficients of a periodic brightness distribution of period u_{max}. One period of this brightness distribution is the desired image. The periodicity of the recovered brightness distribution may also be viewed as resulting from the multilobed angular response pattern, or the "grating" response of the two-element interferometer.[5]

Note that the total number of samples of the visibility function is given by

$$N_s = \frac{s_{max}}{\Delta s} = s_{max}\, u_{max} \tag{11}$$

where s_{max} is the maximum spacing available. On the other hand, an aperture of length s_{max} has an angular resolution Δu given by

$$\Delta u = \frac{1}{s_{max}} \tag{12}$$

It follows that the number of resolvable points in the object field of dimension u_{max} is

$$N_r = \frac{u_{max}}{\Delta u} = u_{max}\, s_{max} = N_s \tag{13}$$

We conclude that <u>the number of resolvable points in the image field is equal to the number of samples of the visibility function that are taken</u>.

Application of the sampling principle to the two-element interferometer is conceptually straightforward. The two mirrors which collect the incoming light are placed sequentially at separations $(u_{max})^{-1}$, $2(u_{max})^{-1}$, $3(u_{max})^{-1}$, etc., until the maximum separation available with the instrument is reached. Thus the visibility data is gradually accumulated, with the full aperture being constructed as a function of time.

While the procedure outlined above is straightforward in principle, serious practical problems may be encountered, even for very bright objects and measurement environments free from atmospheric turbulence. The problems are particularly severe for many objects of military interest, but are less serious for astronomical objects. Consider for example, the sampling interval required

to form an image of a distant man-made satellite. Suppose that the satellite itself subtends as much as 20 seconds of arc (10^{-4} radian), and that considerably detailed resolution of the satellite is desired. The sampling interval required for such an object is 10^4 wavelengths; for 6000 Å light this amounts to 6 millimeters. Clearly if the sampling procedure outlined above is to be employed, the individual collecting apertures must be smaller than 6 millimeters, and as a consequence, the measurements of visibility must be made with rather minute amounts of light.

When the object of interest is larger than a few seconds of arc, then in most cases energy-collection considerations will dictate that the elements of the interferometer be larger than the Nyquist sampling interval. From an entirely equivalent point of view, the individual elements are themselves capable of partially resolving the object. The problem then faced is one of properly combining the resolving power of the elements with the resolving power of the interferometer.

Several potential solutions to this problem can be envisioned, but we describe only one here. Imagine the light collected by the two spaced elements to be brought to a common lens or mirror (as shown previously in Figure 2). The size of the central optics is assumed greater than that of the individual interferometer elements. The image formed by the central optics is detected, either on photographic film or with an electronic detector such as an image orthicon, and the detected data is digitized. A digital Fourier transformation of the detected data yields a sampled spectrum such as shown in Figure 4a. If the two elements of the interferometer are moved farther apart, and the detection process is repeated, a second spectrum may be calculated. The general shape of this spectrum will again be that of Figure 4a; the spatial frequency offset associated with the band of high-frequency information is the same as obtained on the preceding measurement. However, the physical separation of the interferometer elements was larger during the second measurement, and the computer must therefore translate the high-frequency information to an even higher spatial frequency. In this manner a composite spectrum is calculated (Figure 4b) which can then be inverse Fourier transformed to yield an image with the full resolving power of the interferometer.

The computer times required to perform the digital Fourier transformations will be reasonable if only a modest field (e.g., 1000 x 1000 resolvable elements) is needed.

Finally we note that whenever a two-element interferometer is used, and therefore a time sequence of separations is employed, motion of the object can be a serious problem. While astronomical objects may change their angular

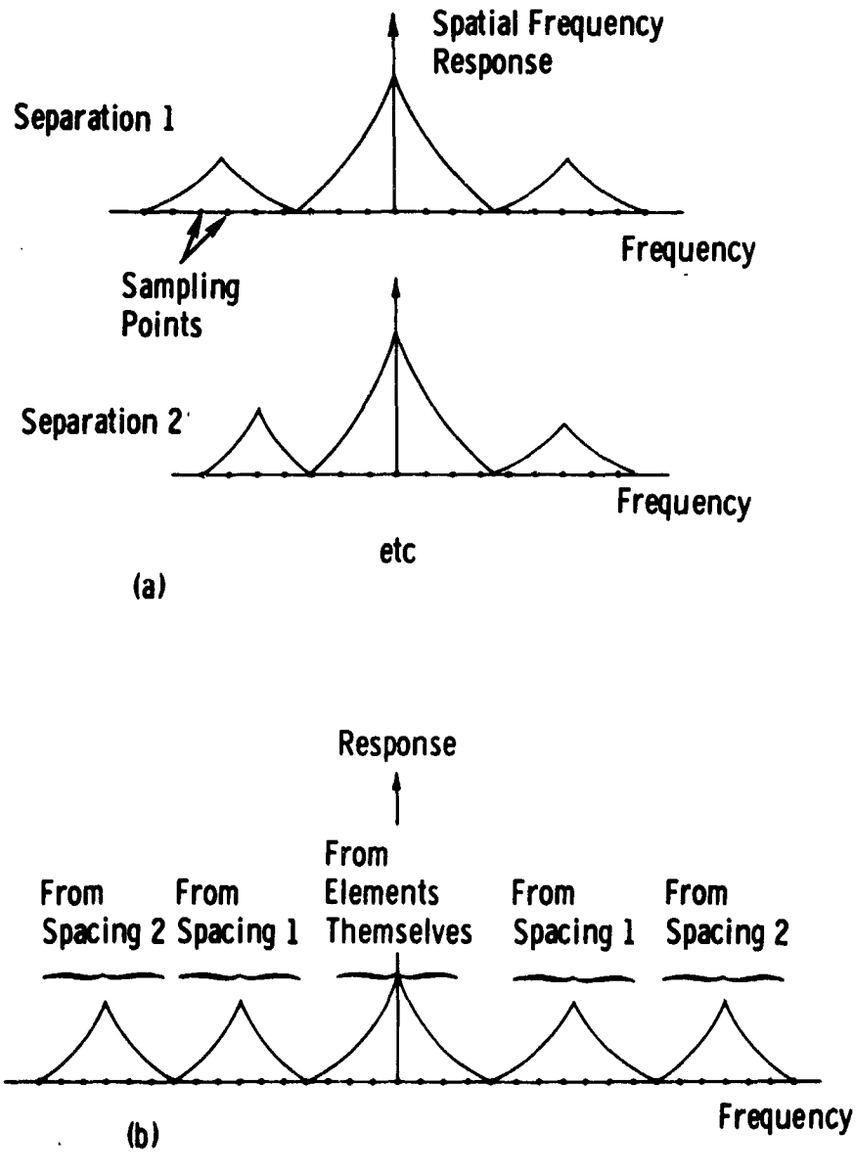

Figure 4. Fourier spectra (a) of the individual measurements, and (b) after proper weighting and frequency translation.

positions rather slowly, man-made objects may travel with relatively high angular velocity and may, in addition, be spinning, tumbling, etc. The time required to sequentially synthesize a full aperture with a two-element interferometer may often be intolerably long for such objects. For this and other reasons we are led to consider interferometers with more than two elements.

2. Multielement Interferometers

The visibility data may be gathered much more rapidly with a multielement interferometer, which measures V over a wide range of spacings simultaneously. Such configurations are widely used in radio astronomy, and have direct analogs in optics.

Consider, for example, the three-element radio interferometer illustrated in Figure 5. As indicated in that figure, there are several ways such an interferometer may be used. For example, in part (a) the RF signals collected by the three antennas are sent through the waveguides to a common junction, where they are added before detection. The result of such a procedure is a multilobed response pattern in space. If the object is no larger in angular subtense than the separation of the individual beams of the pattern (i.e., if $\Delta s \leq (u_{max})^{-1}$), then an unambiguous map of the brightness distribution of the object may be obtained by allowing the object to move through the pattern, or by swinging the pattern past the object by means of variable phase shifters in two of the arms.

An alternative method of utilizing the same three elements is shown in Figure 5b. Here the outputs of the elements are correlated in pairs, each correlation operation yielding the complex fringe visibility at the spacing corresponding to that of the two elements involved. Note that two of the correlators are measuring the visibility for the smaller spacing, and therefore there is redundancy in the measurement. Thus strictly speaking, only two of the correlators are required to gather the desired data, as indicated in Figure 5c. For larger arrays, redundancy considerations allow the elimination of elements as well as correlators.*

Optical analogs of the three-element interferometer are shown in Figure 6. Here we assume that the interferometer baseline is perpendicular to the direction of the object from the instrument. An optical delay line is inserted in the central path to equalize the delays of the three paths.

*For a discussion of minimum-redundancy arrays, see Appendix IV by A. T. Moffet.

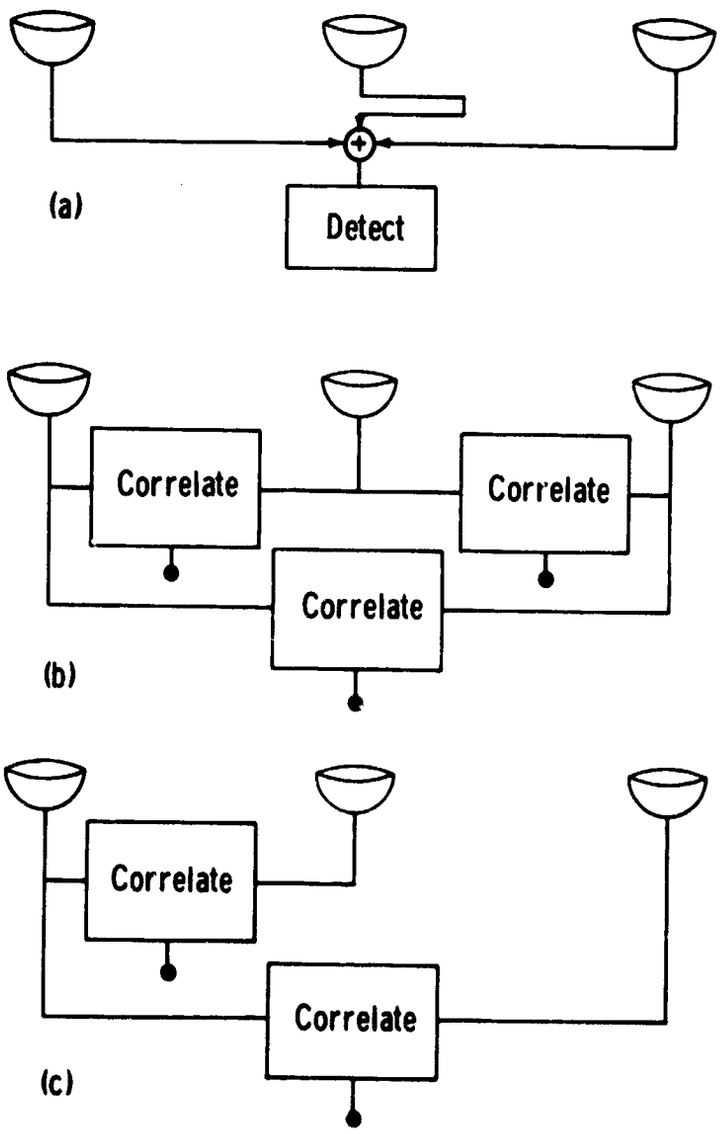

Figure 5. Three-element radio interferometer.

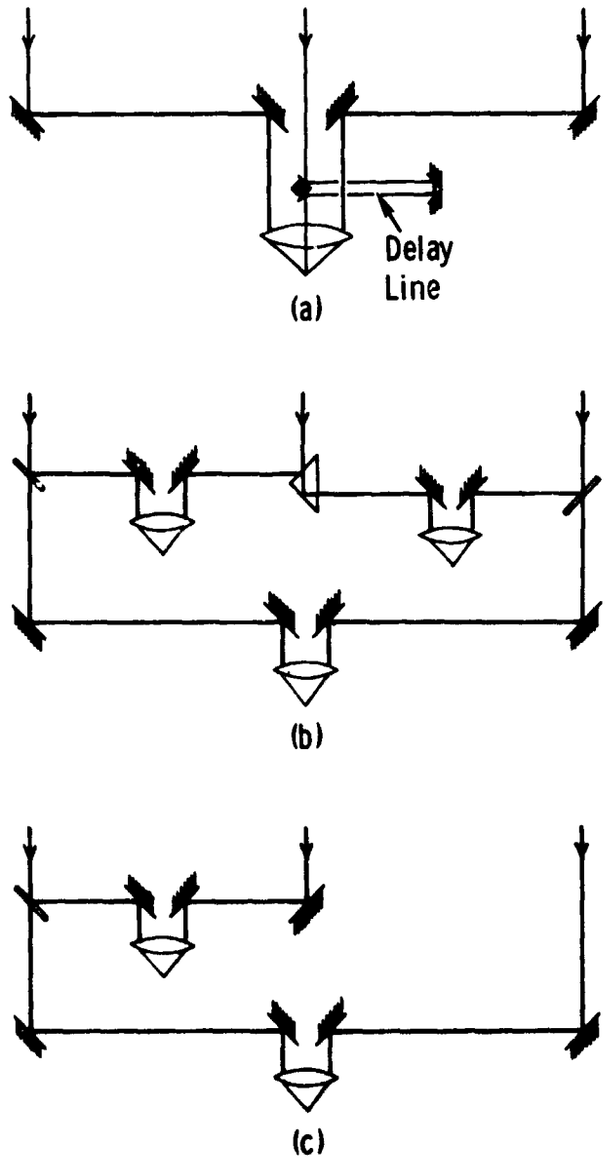

Figure 6. Three-element optical interferometer.

The system of Figure 6a is analogous to that of Figure 5a. A small detector located at a given position in the focal plane of the lens will measure the response of the array with the multilobed beam structure pointed in one direction. If the point detector is moved across the back focal plane, the path delays change such that the response pattern may be swung past a stationary object. Equivalently, if a distributed detecting medium (e.g., photographic film) is used, we obtain directly an image of the object. However, that image contains only those spatial frequency components that correspond to the spacings embraced by the interferometer.

An optical system analogous to the radio interferometer of Figure 5b is shown in Figure 6b. Here the light from the three apertures is combined using three Michelson stellar interferometers. Each interferometer is used to measure the complex visibility of the fringes; the results are Fourier transformed to yield an image. The triple interferometer is again redundant since the visibility at the smaller spacing is measured twice. One of the smaller interferometers can therefore be eliminated without loss of information, as shown in Figure 6c.

From our present point of view, there is no obvious advantage to combining the various light paths individually rather than collectively as in Figure 6a. Collective combination requires only a single lens and provides an image directly, with no subsequent data processing required. Although redundancy is present, it is not necessarily harmful and indeed it can be removed by postdetection image processing if desired. Thus the individual combination of paths would appear unnecessarily complex. However, when the effects of atmospheric turbulence are considered, there can be great benefit from combining the paths individually, as we shall see in a later section. When individual interferometers are used, redundant data can be combined in any fashion deemed desirable; whereas when a single lens is used, all redundant measurements are combined before detection and therefore are no longer individually accessible.

D. NONRIGID STRUCTURES AND THE TIME-DELAY PROBLEM

In a conventional telescope, mechanical rigidity of the optics and mounting assures that light rays arriving at any one image point via different paths through the instrument have nonetheless undergone phase delays which differ by no more than a small fraction of a wavelength. As the telescope is pointed toward different parts of the sky, equality of path lengths is maintained through structural rigidity. For large instruments this rigidity is extremely difficult to maintain under the varying direction of gravitational forces as the telescope is moved.

When a Michelson stellar interferometer is constructed by attaching a long rigid crossbar to a conventional telescope, similar difficulties are encountered.

One of the chief potential advantages of an interferometric system is that the requirement for structural rigidity can be abandoned, although at the price of constructing a rather sophisticated optical delay line.

The basic principle is illustrated in Figure 7 for a two-element interferometer. When rigid mounting of the two elements is employed, as in part (a), the entire rigid structure must be rotated as a unit in order to point in a new direction. When rigidity is abandoned, as in part (b), only the individual elements need be pointed, the time delay being adjusted to assure that the proper phase relation is maintained.

The delay line required for this task is by no means a simple item, particularly for a very long baseline instrument. As a general rule of thumb, to achieve a sky coverage that is appreciable (say a total of 45° or more) with an instrument of baseline L meters, a total optical delay of about L meters must be provided. The physical length of the delay line must therefore be adjustable from a maximum of L/2 meters (providing a round-trip delay of L meters) to a minimum of zero length. One possible configuration for achieving an observation angle of 60° (30° to each side of the normal) is shown in Figure 8.

In practice the delay line need not be realized with one single section as shown in the figure. In fact it may often be preferable to build the line with one short variable section and several longer fixed sections which can be switched in at will. The fixed lengths might be related by powers of 2, such that they could be combined to give delays ranging in uniform discrete steps from zero to L. The short variable length then provides fine adjustment.

The accuracy with which the delay line must be controllable depends on just what information is to be derived from the interferometer. If the amplitude of the visibility function is the sole quantity of interest, then the delay must be adjusted to some fraction of the width of the envelope of the complex degree of coherence. For white light the accuracy required would be a few optical wavelengths. If narrowband filters are inserted, the envelope may be broadened considerably, and the accuracy required of the delay line is relaxed correspondingly, at the price of a loss of energy available for the measurement. Thus there is a direct engineering tradeoff between the accuracy required of the delay line and the sensitivity of the instrument.

When the phase of the visibility function is also desired, the requirement becomes more severe. We restrict attention here to a two-element interferometer operating outside the earth's atmosphere; as we shall see in a later section, it is not possible to measure visibility phase directly with a two-element interferometer in the presence of atmospheric seeing. To measure the phase of the visibility function, it is necessary to measure the position of a single fringe maximum with an accuracy of a fraction of a fringe period. As a consequence

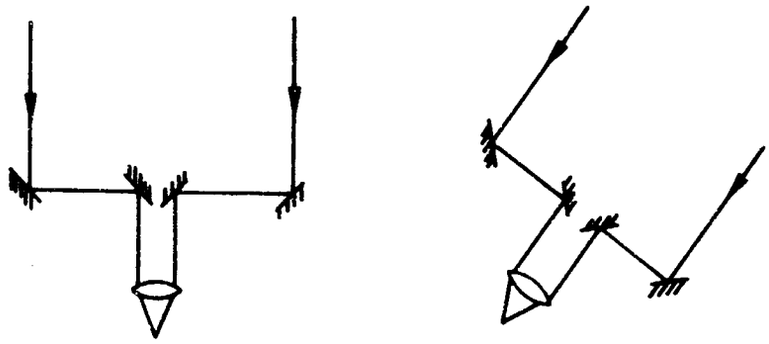

(a) Rigid Mounting

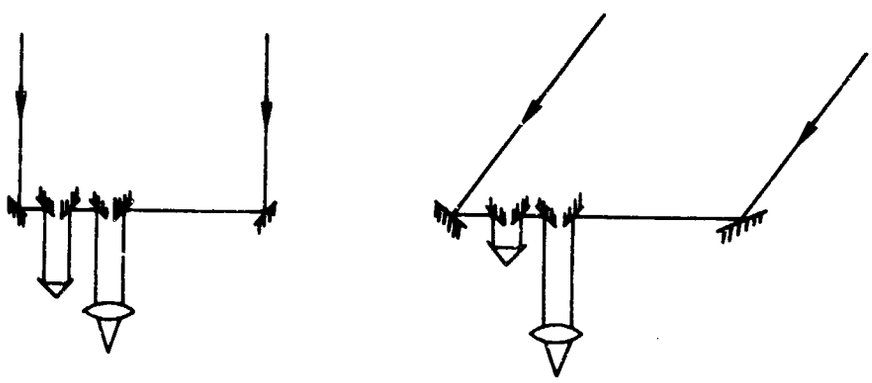

(b) Nonrigid Mounting

Figure 7. Two methods of pointing a two-element interferometer.

the delay must be controllable to a fraction of an optical wavelength, regardless of what the bandwidth of the instrument might be. Thus the engineering tradeoff between delay-line accuracy and instrumental sensitivity is no longer present. As we shall see later, if a third element is added to the interferometer, the engineering tradeoff may be reintroduced, and an interferometer which can measure visibility phase (even in the presence of seeing) may be realized at the price of requiring two optical delay lines. Each delay line may in this case have a relaxed accuracy tolerance, such as would normally be required to measure fringe amplitude alone.

In order to track an object through the full angular coverage of the interferometer, it is required that the length of the delay line be programmable, such that zero path-length difference can be maintained in the presence of a known or predictable object motion. In addition, the delay line must be servo-controlled in order to compensate for the variations of element spacing which inevitably follow from the abandonment of a rigid structure. The realization of such a delay line requires very precise monitoring of the line length, such as can be

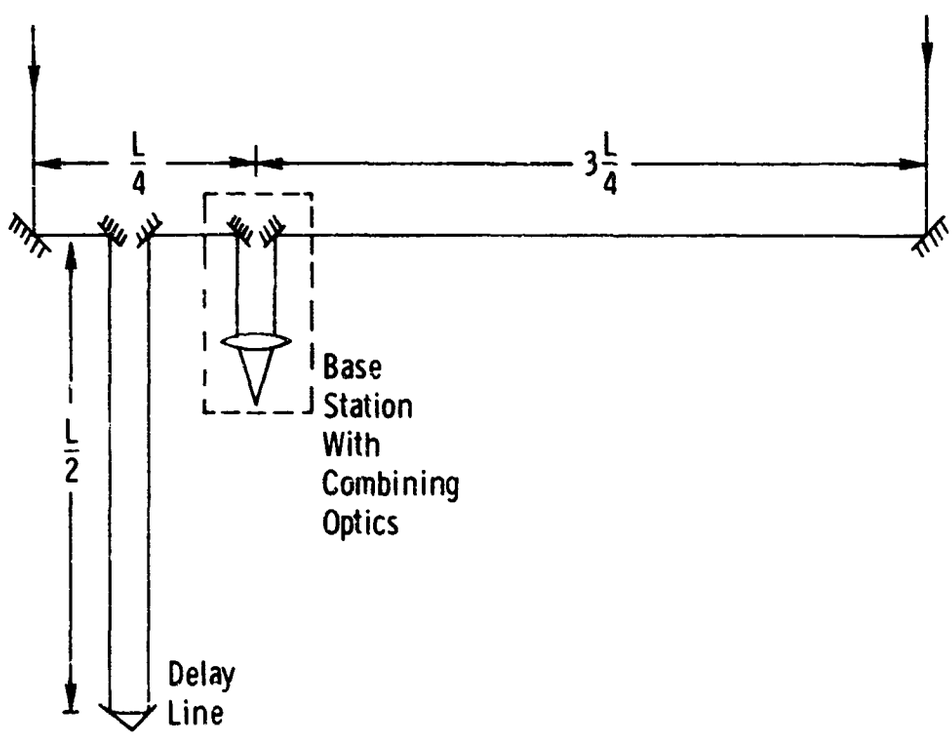

Figure 8. Geometry for achieving a 60° angular coverage.

achieved with a laser fringe-counting system. The fringe-counting system serves, in a very real sense, as the "backbone" of the nonrigid interferometer structure, for it is the extremely high temporal stability of the laser that replaces the extremely high structural stability that would otherwise be required of the interferometer.

Astronomical objects move through the coverage angle of the interferometer as the earth rotates. For such objects, the rate at which the length of the delay line must change depends on the baseline of the interferometer and the angular position of the object. A typical "worst case" example for an instrument with a baseline as long as 1 km would be about 1 cm/sec. For shorter baselines the requirements are correspondingly less stringent.

When nonastronomical objects, such as orbiting satellites, are considered, the problems are more severe. First, the angular position of such an object cannot be predicted to the same degree of accuracy as it can for astronomical objects. If fringes are to be observed in the presence of these uncertainties, either the baseline of the instrument must be restricted or the bandwidth of the instrument must be narrowed. Fortunately, orbiting satellites are often very bright objects, and the narrow bandwidth may be sufficient from a sensitivity standpoint. Because of the relatively high angular velocities of satellites, as compared with the stars, the delay line must change more rapidly than would otherwise be required, thus adding more stringent engineering requirements to be met in the construction of the delay line.

In summary, the usual rigidity required of a telescope can be abandoned in an interferometer. The price paid for this extra flexibility is the necessity of a highly accurate programmable optical delay line. Such a component is a sophisticated and expensive item which would require considerable developmental work but which does not appear technically infeasible. Much experience has already been gained in the construction of highly accurate variable delay lines for spectrographs, and it is certain that this experience would be invaluable in any attempt to realize a delay line of the kind required here.

For further elaborations of the time delay problem and its potential solution, see Appendix V by R. H. Miller and Appendix VI by D. D. Cudaback.

E. COHERENT VS INCOHERENT DETECTION

The technical difficulties associated with the construction of a programmable optical delay line are for the most part attributable to the minute size of the wavelengths involved. This fact suggests the possible desirability of utilizing heterodyne (i. e., coherent) detection at each of the interferometer elements, and performing the all-important time delay operation at an intermediate

frequency where the wavelengths are of more manageable proportion. Indeed such an approach has been used in the construction of long baseline radio interferometers.

Unfortunately, for thermal sources (e.g., stars) or for objects viewed by reflected thermal light (e.g., satellites in sunlight), such an approach is not desirable at optical frequencies. A comparison of the radiometric sensitivities of coherent and incoherent detection is presented in Appendix VII by R.H. Kingston. The signal-to-noise (S/N) ratios achieved with the two modes of detection differ in more than one respect, but the most significant difference lies in the effective optical bandwidths to which two measurement techniques respond. By way of example, a radiometer using incoherent detection responds to all optical power in a bandwidth of about 10^{14} Hz (10^{13} Hz is more appropriate at an infrared wavelength of 10.6 microns). On the other hand, the post-detection bandwidth of a high-quality optical heterodyne system would seldom exceed 10^9 Hz, yielding an equivalent predetection bandwidth of that same order of magnitude. The (voltage) S/N ratio achieved in a radiometric measurement is proportional to the square root of the effective optical bandwidth; this factor is typically more than 100 times greater for incoherent detection than for heterodyne detection. See Appendix VII for more details.

Finally, we emphasize that the discouraging conclusions drawn for heterodyne detection of light from thermal sources must be entirely revised when an active illumination system is considered. When the optical energy is confined to a very narrow bandwidth (as it generally is for laser sources), heterodyne detection can yield performance that far exceeds that of incoherent detection, particularly under conditions of high background noise. We return to consideration of active illumination systems in a later chapter.

F. ATMOSPHERIC SEEING AND ITS EFFECTS ON INTERFEROMETERS

In the preceding discussions we have entirely neglected atmospheric turbulence and its effects on various types of interferometers. In practice, for ground-based interferometers the atmosphere cannot be neglected, for at optical frequencies it has very significant effects on the waves reaching the measurement instrument.

There are two major effects of atmospheric seeing on the performance of a two-element interferometer. First, if the elements themselves are larger than a certain size, which we estimate to be in the range of 5 to 8 inches for visible light, atmospherically induced phase distortions will exist across the spatial extent of each individual element. The distortions across the two elements will differ in detail; and when the two independently distorted wavefronts interfere,

the fringes of interference will be warped. As a consequence, for either of the two possible detection schemes mentioned previously (i.e., the "picket fence" or the Mach-Zehnder interferometer schemes), the detector will effectively integrate across several fringes, thus reducing the measured visibility to a level which may be unacceptably low. In addition, the possibility of measuring the phase of the visibility function is destroyed by this effect. Thus the atmosphere restricts the usable size of the elements of the interferometer to something in the range of 3 to 8 inches.*

There is a second important atmospheric effect that is present even when the individual elements are smaller than the 3 to 8 inch limit mentioned above. While the wavefronts across the elements are not warped in this case, nonetheless the atmosphere will induce differential delays in the two optical paths, resulting in a shift of the position of the fringes. Best available estimates of the differential path-length differences encountered looking up through the atmosphere at visible wavelengths are in the range of 2 to 10 wavelengths. These differences are changing in time with a frequency spectrum that extends out to about 1000 Hz.**

The atmospherically induced path-length differences are of serious concern in interferometry, for if white-light fringes are to be observed at a fixed detector, the path-length differences to the detector must not exceed a few wavelengths. Thus it is conceivable that the region of high fringe visibility, moving at a reasonably high rate over a distance which might be larger than its own full extent, may never be detectable, at least by the human eye. Fortunately the experimental evidence provided by the work of Michelson and Pease demonstrates that the fringes are detectable with the human eye, at least at the interferometer spacings allowed by their 20-ft instrument. We see no reason why the differential delays induced by the atmosphere should be any more serious with longer baselines, but experimental measurements would be useful in this area, as well as for determining more accurately the upper limit to the size of the individual elements.

It should be emphasized that, while fringes can be seen, this by no means implies that all of the information available from the interferometer in the absence of atmospheric effects can be easily extracted when the atmosphere is present. While fringes can be detected, and with sufficient care their amplitude can be estimated, their phase varies randomly with time, making difficult any

---

*A technique for using larger collecting elements, with the wavefront later divided into smaller sections that are used in independent interferometric measurements, is discussed in Appendix V by R. H. Miller.

**While the spectrum extends to 1000 Hz, nonetheless the vast majority of the spectral power lies below 100 Hz. For a more detailed consideration of atmospheric effects, see Appendix VIII by D. G. Currie.

accurate determination of complex visibility. We are tempted to conclude that the phase of the visibility function is irretrievably lost, and that complete image formation in the usual sense is not possible with a two-element interferometer operating within the earth's atmosphere.

The above conclusion may be overly pessimistic, however. While the phase of the fringes varies randomly, making difficult or impossible a visual determination of their precise position, nonetheless with an electronic detector it would be possible to measure and record the phase as a function of time. From this record it should then be possible to estimate the mean phase, which presumably will not differ greatly from the phase that would be obtained in the absence of the atmosphere. To our knowledge, this kind of phase estimation has never been attempted with an optical interferometer, although closely related experiments are currently in progress at the Visibility Laboratory of the University of California at San Diego. Considerably more experimental work is required before the practicality of this scheme can be soundly judged.

As we shall see in the section to follow, it is also possible to recover the phase of the visibility function if a third element is added to the interferometer. With this redundant measurement of fringe visibility, the effects of atmospheric seeing can, under appropriate conditions, be largely removed.

G. A TECHNIQUE FOR ELIMINATING THE EFFECTS OF ATMOSPHERIC SEEING

During the course of the summer study, a technique for eliminating the effects of atmospheric seeing in interferometric measurements was suggested.* As alluded to earlier (Section II C. 2), the imaging operation performed by a lens (or a mirror) has in effect built-in redundancies which are highest for low spatial frequencies and monotonically decrease with increasing spatial frequency. Unfortunately the redundant measurements at any one spatial frequency are added before detection in the usual method of image formation and cannot be observed independently. However, if redundant interferometric measurements are made, the results are available individually; as we shall see, the redundancy may then be used to measure (and later remove) the effects of atmospheric seeing.

*This technique was evidently first proposed in radio astronomy by R. C. Jennison in 1953 (see R. C. Jennison, Introduction to Radio Astronomy, Philosophical Library, Inc., New York (1967), pp. 125-129). Its possible use in optics was suggested at the summer study by D. H. Rogstad, and is elaborated on by him in Appendix IX.

1. The Basic Principle

Consider a two-element interferometer with spacing s, to which a third element is added as shown in Figure 9. The spacing between individual elements is thus $s' = s/2$. We assume that the individual elements of the interferometer are smaller than the critical size of 3 to 8 inches mentioned earlier -- the proposed technique does not alleviate this requirement. Since the crucial quantity of concern here is the phase of the visibility function, frequency shifters may be inserted, for example, in the particular positions and with the particular frequency shifts shown in Figure 9. Alternatively the frequency shifters may be removed and quadrature detectors used, as discussed previously.

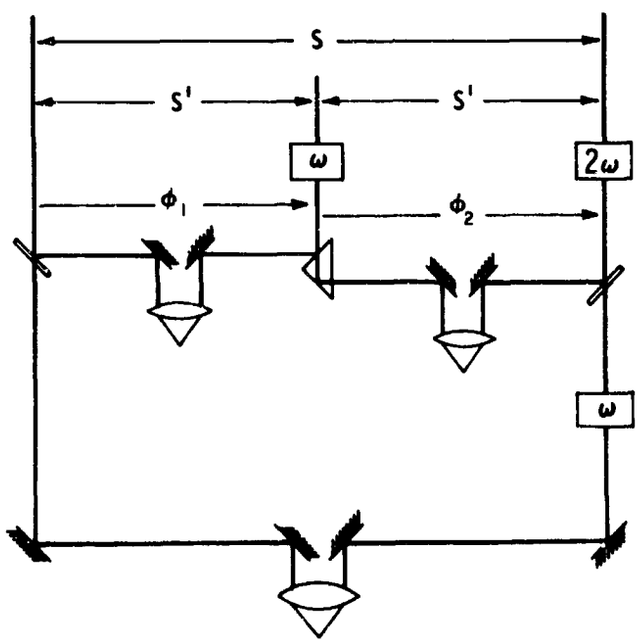

Figure 9. The three-element interferometer for removing atmospheric "seeing".

Using the notation of Eq. (8), the detector output from the left-hand interferometer with spacing s' is given by

$$i_1(t) = A' \sin [\omega t + \psi' + \phi_1(t)] \tag{14}$$

where A' and ψ' are the amplitude and phase of the visibility function appropriate for spacing s', and $\phi_1(t)$ is the atmospherically induced phase shift of the light traveling the middle path, relative to that of the light traveling the left-hand path. Similarly, the detector output produced by the right-hand interferometer, again of spacing s', is

$$i_2(t) = A' \sin [\omega t + \psi' + \phi_2(t)] \tag{15}$$

where $\phi_2(t)$ is the atmospherically induced phase shift of the light traveling the right-hand path, relative to that of the light traveling the center path. Finally, the output from the large interferometer of full spacing s is given by

$$i_3(t) = A_1 \sin[3\omega t + \psi_1 + \phi_2(t) + \phi_1(t)] \tag{16}$$

where A_1 and ψ_1 are the amplitude and phase of the visibility function at spacing s.

Removal of the atmospheric effects embodied by $\phi_1(t)$ and $\phi_2(t)$ is accomplished by appropriate combination of the currents $i_1(t)$, $i_2(t)$ and $i_3(t)$. Multiplication of currents $i_1(t)$ and $i_2(t)$ in an electronic multiplier, followed by a filter tuned to frequency 2ω, yields a new current

$$i_4(t) = -\frac{(A')^2}{2} \cos [2\omega t + 2\psi' + \phi_2(t) + \phi_1(t)] \tag{17}$$

Multiplication of $i_3(t)$ and $i_4(t)$, followed by a filter tuned to frequency ω, yields a final current

$$i_5(t) = K A_1 \sin [\omega t + \psi_1 - 2\psi'] \tag{18}$$

where K is a constant of proportionality.

If $i_5(t)$ is now applied to a quadrature detector, the phase angle

$$\theta_1 = \psi_1 - 2\psi' \tag{19}$$

may be determined. Knowledge of ψ_1 implies knowledge of θ_1 up to an unknown constant $2\psi'$.

If the interferometer spacing is now doubled to a full spacing 2s, with two smaller spacings s included, the phase angle

$$\theta_2 = \psi_2 - 2\psi_1 \tag{20}$$

is measured. Adding θ_2 and $2\theta_1$ we obtain

$$\theta_2 + 2\theta_1 = \psi_2 - 2\psi_1 + 2\psi_1 - 4\psi' = \psi_2 - 4\psi' \tag{21}$$

thus determining ψ_2 up to a constant $4\psi'$.

In a similar manner, the visibility phase ψ_N associated with spacing Ns can be determined up to an unknown constant $2N\psi'$. The effect of these unknown constants is the introduction of an unknown linear phase shift across the visibility function. But under the Fourier transform relation of Eq. (6), the sole effect of this linear phase shift is to introduce uncertainty as to the absolute position of the source in the sky; nonetheless, the brightness distribution about the center of the source is determined from the measurements, free from the deleterious effects usually associated with atmospheric seeing.

While we have discussed the concept in terms of measuring the visibility function for various spacings in time sequence, the technique can also be applied to interferometers which sample a multitude of spacings simultaneously. For amplification of this possibility the reader may consult Appendix IX by D. Rogstad.

2. The Isoplanatic Condition

Implicit in our above discussion is the assumption that all of the light reaching the center element of the interferometer is phase shifted by $\phi_1(t)$ relative to all of the light reaching the left-hand element, and similarly that the phase shift $\phi_2(t)$ applies for all of the light reaching the right-hand element. This assumption that the light from all points on the object is perturbed by the atmosphere in exactly the same way is commonly known as the "isoplanatic" assumption, and arises frequently in discussions of turbulence-degraded images.* With the help of Figure 10, it can be seen that when the angular extent of the object is too large, the atmospheric distortions imparted to light

*See Ref. 1, page 2 of this report.

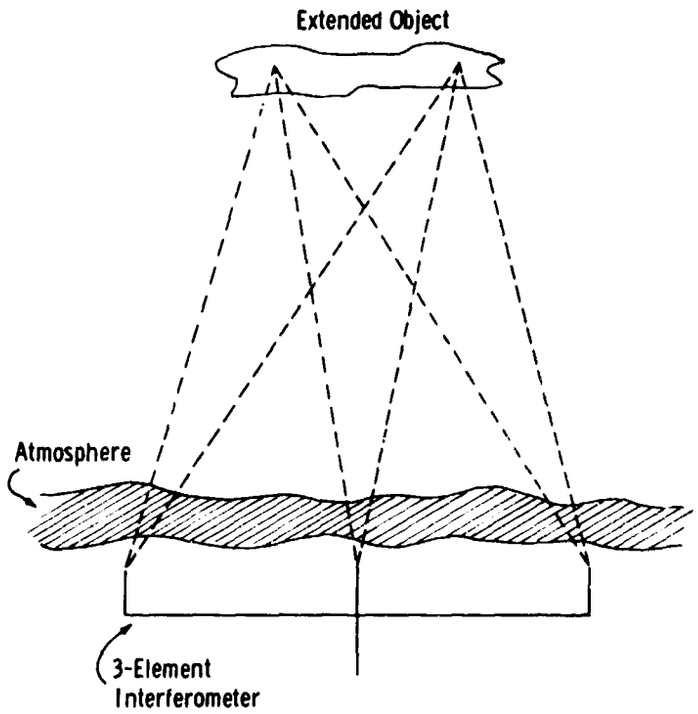

Figure 10. Meaning of the isoplanatic condition.

from two widely separated object points may differ considerably, and the technique described above will no longer be effective in removing the atmospheric distortions.

For the case of looking up through the earth's atmosphere in the visible region of the spectrum, the angular diameter of the isoplanatic region is probably in the range of 1 to 20 seconds of arc, although insufficient experimental evidence is available to specify the limit with great confidence. In any case, the region is sufficiently large to permit application of the above technique to most astronomical problems, and it is probably large enough to allow application to many military problems.

3. Application to the Time-Delay Problem

While the interferometric technique of concern here has been discussed solely in the context of atmospherically induced phase perturbations, the concept is equally applicable to relative phase shifts introduced within the instrument itself (the isoplanatic assumption is always justified for such shifts). This fact suggests that perhaps the technique will also alleviate some of the accuracy

requirements that might otherwise be placed on the programmable delay line needed in order to track objects through the angular field of view of the interferometer. If the phase of the visibility function is to be measured with a two-element interferometer operating outside the earth's atmosphere,* the length of the delay line must be controlled to a fraction of an optical wavelength. However, if a third element is added in the redundant configuration of Figure 9, a significant relaxation in the delay-line tolerances is achieved, with the added benefit that visibility phase can be recovered from measurements within the earth's atmosphere, and the added price that two delay lines (both of relaxed tolerances) are required instead of one.

One possible configuration is shown in Figure 11, where each of the delay lines shown there for convenience as a single unit, can be realized as a series of fixed delays plus a single short programmable delay. In view of the fact that relative phase shifts in the various legs of the interferometer are no longer of concern for the three-element interferometer, the requirements placed on the programmable delays are now that they keep the path-length differences less than the width of the envelope of the coherence function (i.e., less than the coherence length); fractional-wavelength accuracy is no longer required. With the insertion of predetection optical filters, the width of the coherence function can be broadened to any desired degree, at the price of discarding energy which would otherwise have been available for the measurement. Thus there again exists a direct engineering tradeoff between the accuracy of the programmable delay line and the final sensitivity of the instrument. Since the delay line represents a major cost in the construction of a nonrigid interferometer, this engineering tradeoff is of great practical significance.

H. THE QUESTION OF SENSITIVITY

The sensitivity of any given interferometer depends on a number of factors, such as the size of the collecting apertures; the amount of energy used in the measurement; the losses at the various mirrors, beam splitters, etc.; the level of background noise; and the quantum efficiency and internal noise of the particular detector used. In addition, the sensitivity may depend on exactly how much information is to be extracted from the measurement. Thus for a source of a given brightness, the measurement time required may depend on whether reliable estimates of only the amplitude of the visibility function are required, or whether estimates of both amplitude and phase are required. We would expect intuitively

*As discussed previously, it is not possible to measure the visibility phase directly with a two-element interferometer operating within the atmosphere.

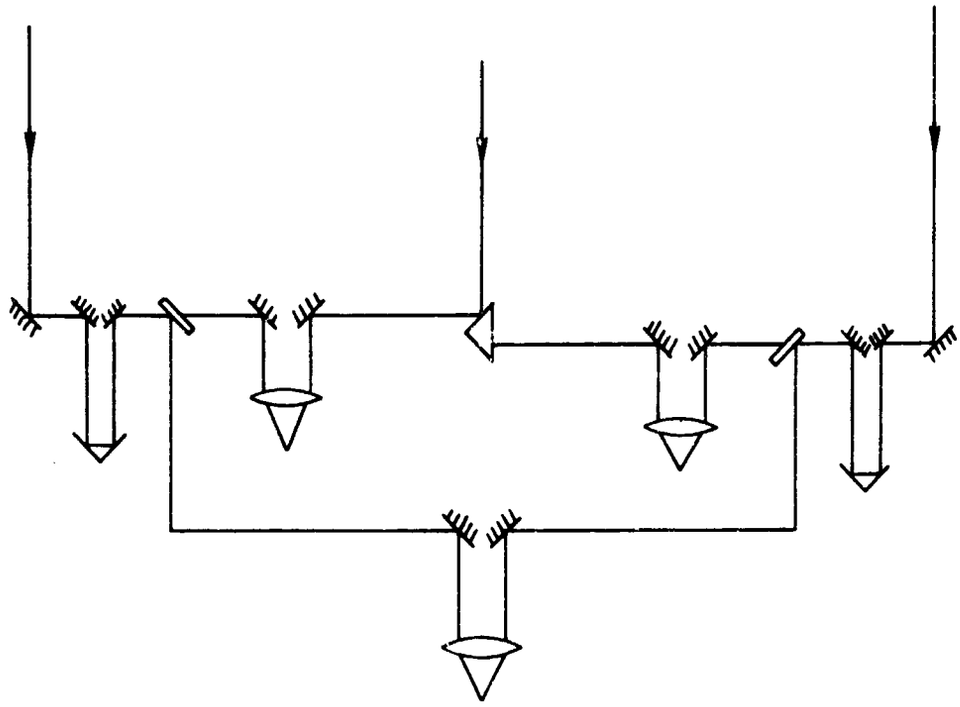

Figure 11. Interferometer with two delay lines.

that the more information is to be extracted from the measurements, the longer the required integration times. In particular, the three-element interferometer described previously operates by linearly combining three measured phase angles, each of which is perturbed by noise. The final phase angle resulting from this combination will thus be noisier than any of the constituents, and the ability to remove atmospheric effects is achieved at some price of sensitivity.

Even if only visibility amplitude information is desired, however, sensitivity is of serious concern, for we have previously pointed out that atmospheric effects restrict the size of the collecting apertures to the range of 3 to 8 inches diameter. With apertures of this small size, it seems quite certain that the class of objects which can be studied with the interferometer is seriously limited. Thus it would appear highly desirable to devise a scheme for utilizing larger collecting apertures while still avoiding atmospheric warping of the fringe pattern.

1. A Technique for Utilizing Large Apertures

Such a scheme is discussed in Appendix V by R.H. Miller. An aperture of diameter larger than 3 inches may be treated as a collection of a multitude of independent 3-inch apertures. Thus the wavefronts emerging from the two large collecting apertures are geometrically divided into 3-inch-diameter segments. The light from one subdivision of one aperture is allowed to interfere only with the light from the corresponding subdivision of the second aperture, and each such pair of subapertures is followed by its own separate fringe detector. A series of independent small interferometers operating in parallel is thereby realized by means of the larger elements, and the combination of independent interferometer measurements yields a corresponding improvement of sensitivity.

Two points regarding this scheme are worth emphasis. First, when the large apertures are divided into N subapertures, it is not necessary that N independent delay lines be supplied. A single delay line of size comparable to that of the large apertures may be utilized, with wavefront subdivision introduced after the delay operation. A delay line of large cross section is, of course, more difficult and expensive to realize than one of small cross section, but it is probably more economical than an equivalent number of the smaller delay lines.

A second important point emerges when we consider application of the wavefront-division technique to the three-element interferometer operating within the earth's atmosphere. As discussed previously, each of the independent small interferometers measures the phase of the visibility function, but only with the ambiguity of an unknown linear phase shift [cf. Eqs. (19) and (21)]. It is crucial that these unknown phase shifts be the same for every elementary interferometer, for otherwise when the independent measurements are combined there would be no improvement of S/N ratio. Fortunately this unknown phase shift is quite independent of the atmospheric delays, being determined solely by the absolute position of the source in the sky. Thus when the outputs of the independent interferometers are combined, an improvement of S/N ratio will be achieved in spite of the presence of the atmosphere.

2. Quantitative Data on Sensitivity

With the exception of the work of J. Elliott,[6] relatively little exists in the way of previous quantitative analyses of the sensitivity of the Michelson stellar interferometer at optical wavelengths. Furthermore, we know of no previous studies of the sensitivity of the three-element interferometry scheme. The short duration of this study permitted only a brief look at the former problem and essentially no look at the latter problem.

Appendixes II and X by D. G. Currie and R. H. Miller, respectively, contain independent analyses of the sensitivity of a particular type of amplitude interferometer. In both cases the two beams are combined in the Mach-Zehnder arrangement of Figure 3. As emphasized by Currie, in the measurement of fringe amplitude it is not necessary to supply a modulator in one of the interferometer arms, for the atmosphere supplies more than enough motion of the fringes. To detect the presence of fringes, it is merely necessary to detect the simultaneous occurrence of high intensity at one detector and low intensity at the other. When no fringes are present, the detector outputs are equal (on the average).

Since weak signals are of chief concern, it is necessary to consider the statistics of the photoelectrons emitted by the two detectors. For a detailed discussion of how the photoelectron counts may be processed to detect the presence of fringes, and of the resulting sensitivity of the instrument, the reader is referred to the aforementioned appendixes.

I. INTENSITY INTERFEROMETRY

We have previously assumed that the light incident on the two collecting apertures is first combined and then detected. As originally proposed and demonstrated by R. Hanbury Brown and R. Q. Twiss, it is possible to use the alternative procedure of first detecting the light incident at each of the apertures and then combining the two detector outputs.[7] The result is a so-called "intensity interferometer."

1. Basic Procedure

The basic geometry of an intensity interferometer is illustrated in Figure 12. The two primary collectors focus light onto the detectors D_1 and D_2. The photocurrents are (after suitable amplification) passed on to an electronic correlator, where they are multiplied and their product is time averaged. If I_1 and I_2 represent the intensities of the light striking detectors D_1 and D_2, then the output R_{12} of the correlator obeys[8] the proportionality

$$R_{12}(\tau) \propto \langle I_1(t)\, I_2(t+\tau)\rangle \tag{22}$$

where τ is a time delay introduced electronically. Subject to a certain crucial condition, which will be discussed in detail below, the normalized correlator output may be expressed in terms of the modulus of the complex degree of coherence as follows:

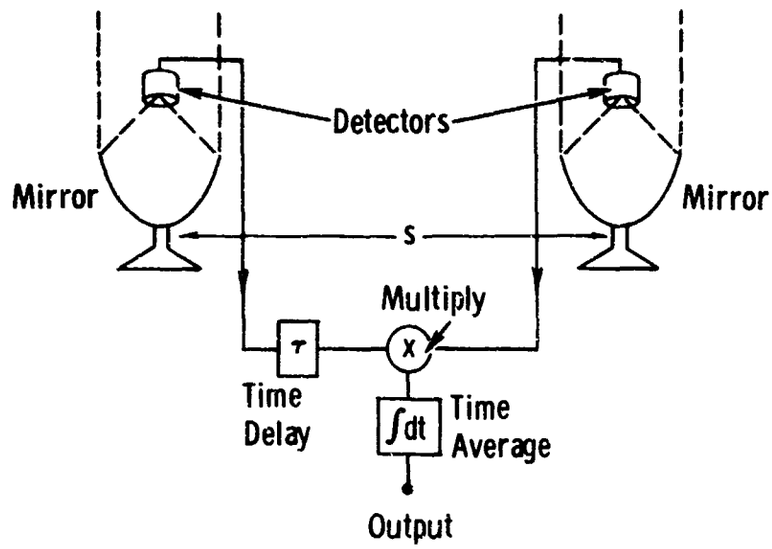

Figure 12. Two-element intensity interferometer.

$$r_{12} = \frac{\left\langle (I_1 - \langle I_1 \rangle)\ (I_2 - \langle I_2 \rangle) \right\rangle}{\left\langle I_1^2 \right\rangle^{1/2} \left\langle I_2^2 \right\rangle^{1/2}} = \frac{1}{2} \left[1 + \left| \gamma(\vec{s};\tau) \right|^2 \right] \tag{23}$$

where $\vec{s}$ is the spacing of the two collecting apertures. Thus from the output of the correlator it is possible to determine the amplitude $\left| \mathcal{V}(\vec{s}) \right|$ of the visibility function. The phase, on the other hand, is not obtainable from this type of measurement, and a full image in the usual sense cannot be obtained from the measured data.

The crucial assumption required to arrive at Eq. (23) from Eq. (22) is that the statistics of the field strengths incident on the two detectors are gaussian; if this is not the case, then Eq. (23) is no longer valid. This assumption is satisfied if the light in question is of thermal origin. Thus the technique may be applied to self-luminous objects, or to reflecting objects illuminated by a large self-luminous source such as the sun.

There are very real practical advantages which make the use of intensity interferometry attractive. First, the primary collectors serve only to gather light energy and need not be of high optical quality. Second, moderate atmospheric turbulence does not significantly affect the results of the measurement. Third, the combination of the two electrical channels is far simpler and less critical than the combination of the two optical paths of the Michelson stellar interferometer, for the accuracy required of the delay is determined by the electrical bandwidth rather than the far wider optical bandwidth.

2. Limitations of Intensity Interferometry

Although the practical advantages of intensity interferometry are significant, they are achieved at a rather serious price. First, as we have mentioned above, phase information is lost, thus prohibiting the ultimate formation of images in the most general cases. More important is the limitation imposed by sensitivity. The rms S/N ratio at the output of an intensity interferometer may be written as

$$\left(\frac{S}{N}\right)_{rms} = (b_\nu T_o)^{1/2} \; \alpha \bar{n} \left| \gamma(\vec{s}) \right|^2 \tag{24}$$

where b_ν is the postdetection bandwidth of the photomultipliers, T_o is the integrating time, α is the quantum efficiency of the detectors, and $\bar{n}$ is the average number of photons per unit bandwidth for the source in question. Unfortunately, for thermal sources the value of $\bar{n}$ is typically of the order of 10^{-3}; assuming typical numbers of $\alpha = 0.10$, $b_\nu = 10^7$ Hz, and $|\gamma| = 1$, an integration time of $T_o = 1000$ seconds is required to achieve a S/N of ten. Thus for thermal sources, intensity interferometry is a rather insensitive technique.

3. Laser Illumination and Three-Element Intensity Interferometry

The problems of insensitivity and lack of phase information do not necessarily exclude intensity interferometry from useful military application. The sensitivity can in fact be vastly improved if active laser illumination is provided. Note that the field amplitude of a single mode of laser light does not obey gaussian statistics, and as a consequence, Eq. (23) is no longer applicable. However, it can be shown[9] that when a laser is oscillating in several independent modes simultaneously, the field amplitude is very nearly gaussianly distributed. Thus even for only a few independent modes, Eq. (23) is a good approximation. Most important, for such light the parameter $\bar{n}$ of Eq. (24) may typically be of the order of 10^3, thus providing vastly improved sensitivity.

We should note that multimode laser light may often be spatially coherent, and the simple Fourier transform relation of Eq. (6) cannot be expected to yield a correct brightness distribution. Nonetheless, if the exact coherence properties of the transmitted light are known, it should be possible to arrive at the correct brightness distribution by another (probably more complicated) inversion.

Finally, the suggestion was made at the summer study that with a three-element intensity interferometer, it should be possible to measure visibility phase as well as amplitude. This speculation was to a large extent motivated by the work of Gamo,[10] who has previously suggested the possibility of measuring the amplitude and phase of the τ dependence of the complex degree of coherence by means of a three-detector intensity interferometer. Time did not permit a detailed consideration of the spatial analog of Gamo's technique, but such consideration would certainly be valuable in the future. Also of interest is the three-element "compound" intensity interferometer of MacPhie,[11] which allows measurement of both amplitude and phase, combining many of the advantages of both the Michelson interferometer and the intensity interferometer. Again an examination of the applicability of these techniques to optical imaging problems would be of considerable interest.

J. ASTRONOMICAL NEEDS FOR HIGH ANGULAR RESOLUTION

While our purpose here is to delineate the possible optical aperture synthesis techniques that might be of use in Air Force problems, the discussion would nonetheless be incomplete if we failed to point out the possible benefits to astronomy from such an approach. The limitations to angular resolution imposed by diffraction and atmospheric turbulence have previously seemed so insurmountable as to discourage the hope of position measurements more accurate than 0.01 arc second, or brightness distribution determinations with resolution better than 1 arc second. With a 1-km baseline interferometer, it would be possible to resolve brightness distributions to 10^{-4} arc second, assuming that the three-element technique for removing atmospheric effects were employed. Position information is more difficult, for atmospheric effects do limit the accuracy of this type of measurement. It is not clear how much of the 10^{-4} arc second capability of a 1-km instrument can be realized in position measurement, but we may hope for a position accuracy of 10^{-3} arc second. Appendix XI by D.D. Cudaback, R.H. Miller, and R.W. Noyes describes a number of astronomical needs which could be met with higher angular resolution. The needs are described in terms of their relation to a broader understanding of astrophysical processes and galactic structures.

It is improbable that a large optical interferometer would lead to the discovery of new sources. The interesting and useful information will arise from the improved resolution of the brightness distributions of known objects, and from the improved accuracy of position measurement.

Positions alone are the major parameters of galactic structure. Measurement of the position of an object as a function of time is the only direct way of determining mass. Variations of the apparent position of a star as the earth moves around the sun indicate the distance to that star. This distance is not only a parameter of galactic structure, but it also enables the energy radiated by the star (i. e., the luminosity) to be deduced from the flux received at the earth.

Improved resolution of brightness distributions has correspondingly high reward. Determination of stellar radii is perhaps the most important need for higher resolution: masses, luminosities, and radii are the fundamental properties which must be fit by any theory of stellar structure and evolution. Multiple stars with associated gas streams, spots with enhanced temperature and velocity on individual stars, and exploding stars or novae are all sources of material flowing into interstellar space. Such material is in turn the source of evolution of the next generation of stars; if the distributions of this material could be resolved, important information would be gained for one of the most significant problems of contemporary astronomy -- the problem of stellar evolution. A resolution of 10^{-4} arc second would provide a great deal of this type of information.

The condensation of interstellar material into new stars also controls the production of systems of planets. The most basic questions concerning the probability of life in other parts of the galaxy hinge on the details of planetary condensation. This information is contained in the 10 micron infrared brightness distribution over condensing systems, and could be studied with an angular resolution of 10^{-3} arc second.

K. DISCUSSION

Considerable space has been devoted here to the topic of interferometry. There are two reasons for concentrating heavily on this subject. First, the attention given here accurately reflects the degree of enthusiasm and activity which the participants in the study felt this topic warranted. Second, the subject of image formation by interferometry is one which has not received the same degree of attention in optics as it has in radio astronomy, and it is hoped that by drawing the attention of a wider group of scientists to this subject matter, significant future developments may be stimulated.

There are a number of general concepts in our previous considerations which, while not directly translatable into immediate practice, are nonetheless important enough to have considerable potential impact on future optics research. We would mention specifically the following:

(1) The potential ability to abandon spatial rigidity of optical elements at the price of a highly accurate, programmable delay line.

(2) The potential advantages to be gained, particularly in imaging through turbulence, by the clever utilization and manipulation of spatial frequency redundancy rather than simple acceptance of the inflexible redundancies inherent in a conventional imaging system.

The gains that may come from these considerations should not be expected immediately, for there are practical problems of considerable magnitude that must be overcome. The chief practical problem is, of course, the development of an optical delay line which has sufficient accuracy and speed of adjustment to be useful. As mentioned previously, there exists an engineering tradeoff between the accuracy of the delay line and the sensitivity of the final instrument. There is reason to believe that a delay line of limited length and limited accuracy could be realized in the near future with a significant developmental effort.

While such a line could be built in the near future, it would in all likelihood, be significant only as a prototype for a longer, more accurate or more intricate delay line. For astronomy applications, a 10 or 20 ft instrument would probably not yield any astounding new astronomical information, but would provide the experience and confidence required before a longer instrument could be contemplated.

For military applications, extreme sensitivity is often not required; furthermore the resolution available from a 20-ft instrument could be very significant. However, a serious practical difficulty here is the relatively high angular velocity of many objects of military interest. Thus for a delay line to be of wide use to the military, it must be capable of much faster tracking than is required for problems of astronomy. Furthermore, the objects may be tumbling, or unstable, in other manners, thus requiring that an entire range of spacings be explored in a very rapid sequence. The alternative of a multielement interferometer, while conceptually attractive, involves considerably greater complexity, sophistication, and cost.

We are forced to conclude, then, that in the near future the potential military applications of interferometry are limited to situations in which a relatively small amount of image data is required. Thus for determining the size of an otherwise unresolved object, or for adding a few resolution cells

to an image that would otherwise be meaningless, interferometry techniques show considerable promise.

It would be hoped that new ideas will spring from the experience gained with an interferometer of limited size, applied to limited problems, thus bringing more complex interferometric imaging systems closer to practicality.

Finally, we should emphasize that the three-element interferometric technique for eliminating the effects of atmospheric "seeing" may find application to existing large-aperture telescopes. Any such telescope can, by the insertion of appropriate masks, be operated as an interferometer. Suggestions of simple and practical methods for utilizing existing large-aperture instruments to realize the three-element technique would indeed be welcome and may be forthcoming in the near future.

L. REFERENCES

1. M.J. Beran and G.B. Parrent, Theory of Partial Coherence, Prentice-Hall, Inc., Englewood Cliffs, N.J. (1964). See also Appendix I by E.L. O'Neill.
2. A. Michelson, Phil. Mag., 30, 1 (1890).
3. A. Michelson, Astrophys. J., 51, 257 (1920); see also A. Michelson and F. Pease, ibid., 53, 249 (1921).
4. F. Pease, Ergeb. Exact Naturev., 10, 84 (1931).
5. R.N. Bracewell, IRE Trans. Antennas and Propagation, AP-9, 59 (1961).
6. J. Elliott, Thesis, Massachusetts Institute of Technology (1965).
7. R. Hanbury Brown and R.Q. Twiss, Proc. Roy. Soc. (London), A242, 300 (1957).
8. L. Mandel and E. Wolf, Rev. Mod. Phys., 37, 231 (1965).
9. H. Hodara, Proc. IEEE, 53, 696 (1965).
10. H. Gamo, J. Appl. Phys., 34, 875 (1963).
11. R.H. MacPhie, IEEE Trans. Antennas and Propagation, AP-14, 369 (1966).

III
FEEDBACK-CONTROLLED OPTICS

For several years the Perkin-Elmer Corporation has been engaged in a study of the feasibility of automatic, closed-loop servo control of the figure of a mirror surface.* One of the specific goals of this work has been the servo control of a number of independent mirror segments to form a single large mirror surface of high quality. Such a task falls within our very broad definition of aperture synthesis.

The study of techniques for active figure control has been largely motivated by the anticipated requirements for the second and successive generations of space telescopes. These orbiting instruments will have apertures larger than 1 meter. Attainment of diffraction-limited performance from such telescopes is made extremely difficult by the unfavorable acceleration and vibration environment experienced during launch, as well as by the severe thermal environment encountered in orbit. It would appear that significant savings in weight can be achieved if some provision is made for controlling the figure of the mirror while it is in orbit.

*For a detailed discussion of the Perkin-Elmer work, see Appendix XIII by D. A. Markle.

A. THE BASIC APPROACH

The essential components of a servo-controlled segmented mirror are shown in Figure 13. The system consists of the mirror elements, a figure analyzer, an electronic error computer and control logic, and actuators to make necessary corrections to the alignment of the mirror elements.

The figure analyzer forms the heart of the system, for it performs the essential function of determining the positions of points on the mirror segments relative to an ideal spherical surface. Spatial positions are determined with the help of two different types of interferometers. First is the modified Twyman-Green interferometer shown in Figure 14. A single-mode HeNe laser is used for illumination. Lens 1 converts the plane wavefront in the interferometer into a spherical wavefront. This wave strikes the spherical mirror segments, which are to be positioned such that their centers of curvature coincide with the focus of lens 1. If the spherical segments are in their proper positions, the returning spherical wave is collimated by lens 1, and the interference occurring at the beam splitter is uniform. If the center of curvature of a segment is laterally displaced from the interferometer focus (tilt misalignment), then the corresponding portion of the interference pattern contains straight lines. A longitudinal displacement between the focus and the center of curvature produces circular interference fringes.

If the uniformity of brightness of the interference pattern is to be used as a measure of figure error, extreme care must be taken to assure that the illumination across the mirror segments and the reference flat is uniform, and in addition, that the sensitivity of the final detector is uniform. For accuracies of the order of $\lambda/100$ the degree of uniformity required becomes impractical. This difficulty is overcome by performing a phase comparison instead of an intensity comparison. A frequency shifter is inserted in the reference arm to introduce a small frequency offset. A scanning image dissector (nonintegrating) detects the beat frequency between the light returning from the mirror segments and the reference light. The phase of the current detected at each point in the field of the image dissector is indicative of the position of the corresponding point on the segmented mirror relative to an ideal reference sphere. The uniformity of the phase of the detected currents is thus directly related to the accuracy of the total mirror surface. Errors of 1/200 wavelength can be detected in this manner.

Unfortunately the phase measurement described above is ambiguous in multiples of 2π radians. Since the initial positions of the segments will not be within $\lambda/2$ of their ideal positions, some means of removing these ambiguities is required. This task can be accomplished with the help of a number of small

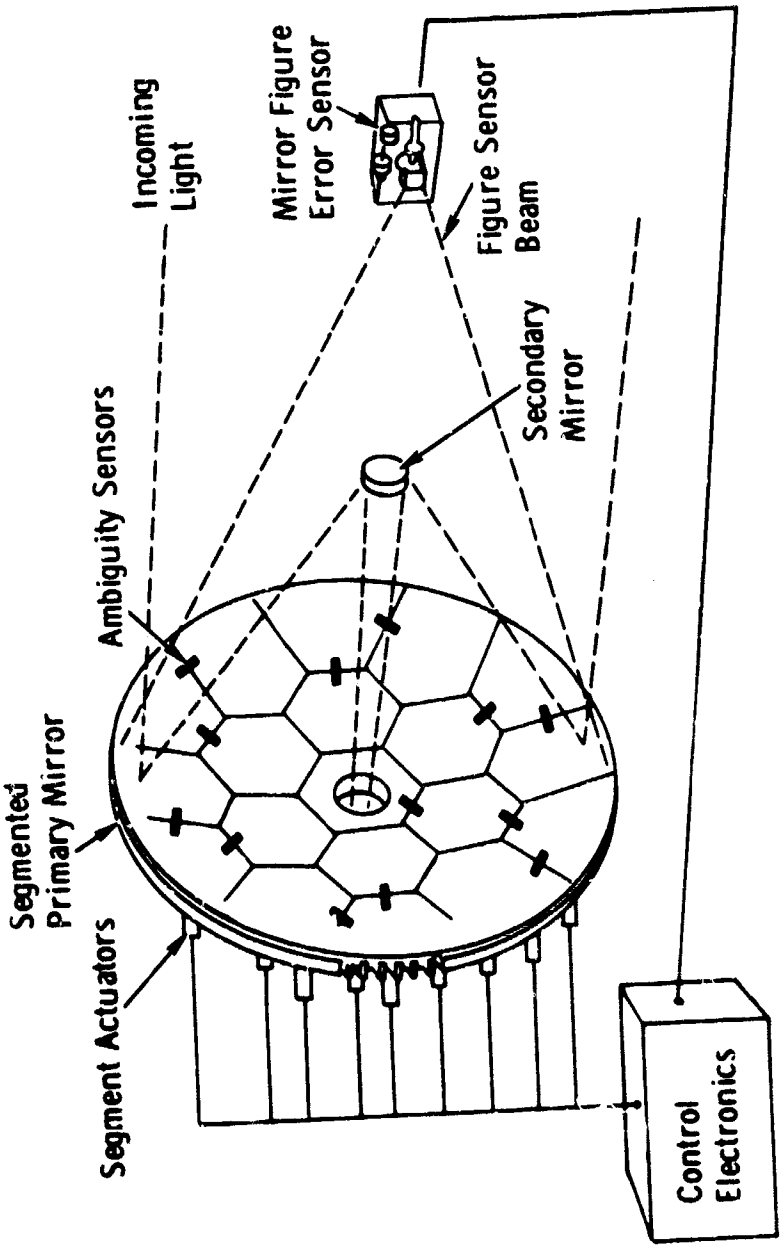

Figure 13. Servo-controlled segmented mirror.

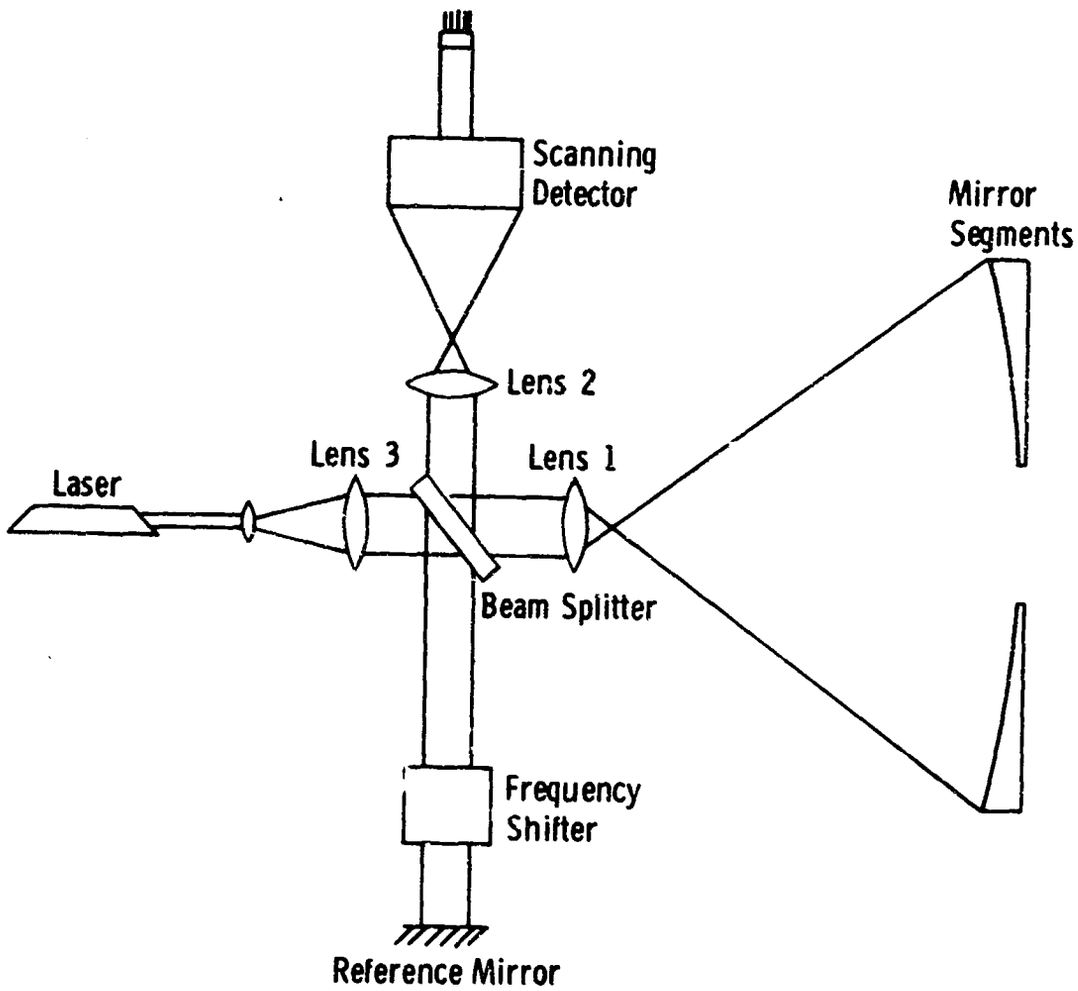

Figure 14. Twyman-Green interferometer for figure sensing.

equal-path white-light interferometers which are placed immediately above the gaps between each of the mirror segments, as shown in Figure 15. With the help of these so-called "ambiguity sensors" it is possible to align adjacent segments to within ±5 microinches, which is sufficiently close to allow unambiguous interpretation of the phase measurements from the laser interferometer.

The figure error measured in this manner is finally converted by the control electronics to a number of drive signals, and the corresponding actuators on the back of each segment are driven to null the error.

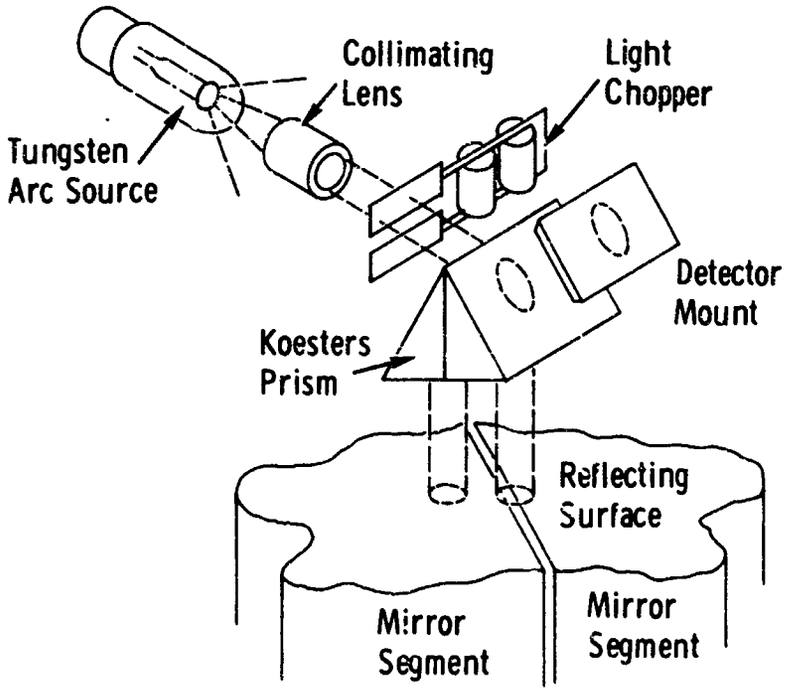

Figure 15. Ambiguity sensors.

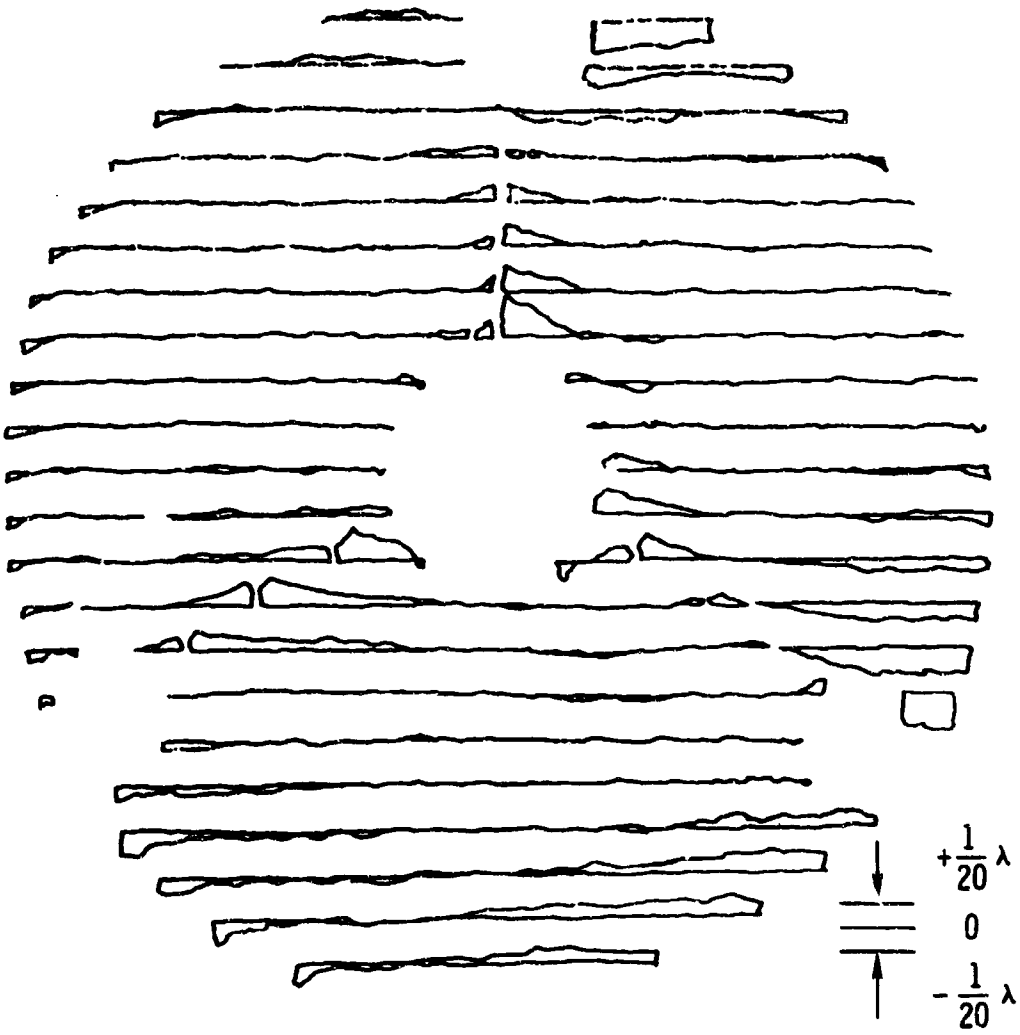

Figure 16. Error profile with the servo loop closed.

B. EXPERIMENTAL RESULTS TO DATE

The experimental work to date has utilized a 20-inch-diameter segmented mirror. For simplicity, a single 20-inch mirror was cut into three pie-shaped segments. An error profile of the composite mirror with the control system operating is shown in Figure 16. The average figure error was $\lambda/40$, which is not greatly different from that of the original nonsegmented mirror. Work is now underway to apply the active control and sensing techniques to improve the figure of a thin (single-piece) deformable mirror.

C. DISCUSSION

Feedback-controlled optics are closer to practical utilization than many of the other aperture synthesis schemes considered in this report. However, the real significance of these techniques transcends the particular embodiment discussed above, for they are important in a broader sense to the general field of aperture synthesis. In particular, they provide the first practical demonstration that the spatial rigidity of a large optical system can indeed be abandoned, provided it is replaced by the temporal stability of a high-quality laser source. As seen earlier, this possibility is also important in long baseline optical interferometry. In addition, the problem of obtaining a certain predetermined figure with a nonrigid structure will again arise in our discussion of partially filled apertures and also, to a lesser extent, in our consideration of holographic arrays. It seems certain that the practical experience gained in the Perkin-Elmer program will be of great future utility in a wide variety of aperture synthesis problems.

IV
IMAGING WITH PARTIALLY FILLED APERTURES

Many of the chief practical problems encountered in the deployment of large optical systems, particularly in space, arise from the massive weight of the primary mirror. One conceptually simple method of alleviating this problem is to construct a system with a primary aperture that is not completely filled. Thus a number of small optical elements may be spread dilutely throughout the full area normally occupied by the primary mirror, yielding a partially filled aperture.

A. SOME GENERAL PROPERTIES OF PARTIALLY FILLED APERTURES

1. Comparison with Interferometry

The interferometry techniques of Chapter 2 are in a sense techniques for imaging with partially filled apertures. However, there are important distinctions between interferometry and the techniques to be considered now. Perhaps the most basic distinction arises from the different physical quantities measured in the respective cases -- the complex visibility function on the one hand and an image on the other hand. To obtain an image directly (i.e., before detection) it is necessary to place the individual optical elements such that they fall on the surface of an ideal mirror figure. Thus all the elementary mirrors must have a common focus in space. No such requirement is encountered for interferometry techniques. In the future, therefore, when we refer to "partially filled

apertures," we shall always mean a collection of small optical elements sharing a common focus.

A second distinction important to keep in mind arises when considering pointing of the instrument. Since the elements of a partially filled aperture share a common focus, it is necessary to turn the entire aperture as a whole, as if it were completely filled. On the other hand, to point an interferometer it is only necessary to turn the individual elements, with the path-length differences being compensated by the delay lines.

2. Comparison of Filled and Partially Filled Apertures

When utilizing a partially filled aperture, the advantage of lower weight is obtained only at a certain price. The most obvious price paid is the lower energy collected: when a fraction of the aperture is filled, only a fraction of the incident energy is actually collected by the instrument. This loss is quite acceptable in many applications, both astronomical and military, when adequate light is available and the highest possible resolution is desired.

In some cases, a more subtle price is paid in terms of resolution, i.e., the resolving power of the partially filled aperture may be lower than that of a completely filled aperture of the same size. However, as we shall see, whether or not such a price is paid depends very much on the nature of the object and on the particular definition chosen for "resolution." This point is illustrated in Figure 17. For simplicity we consider a one-dimensional aperture of total extent ℓ. Part (a) of the figure shows the filled aperture with its associated point-spread function and modulation transfer function. Part (b) illustrates the same quantities for a partially filled aperture composed of two elements, each of width $\ell/3$, separated by an empty space of width $\ell/3$. Finally part (c) shows the limiting case of two tiny elements separated by the distance ℓ.

Several important trends are noticed in this figure. First, as the fraction of the aperture filled is decreased, the "sidelobes" of the point-spread function increase, while the width of the central lobe decreases somewhat. This trend is important when we consider the ability of the instrument to revolve a multitude of point sources. Consider, for example, a multitude of point sources which are spread over a region which is comparable with the full extent of the point-spread function. In such a case, high sidelobes are very harmful, and we would say that the revolving power of the partially filled aperture is less than that of the filled aperture. On the other hand, suppose that we are attempting to resolve two point sources that are separated by a distance smaller than the width of the central lobe of the point-spread function, and that there are no other point sources in a distance corresponding to the full width of the point-spread function.

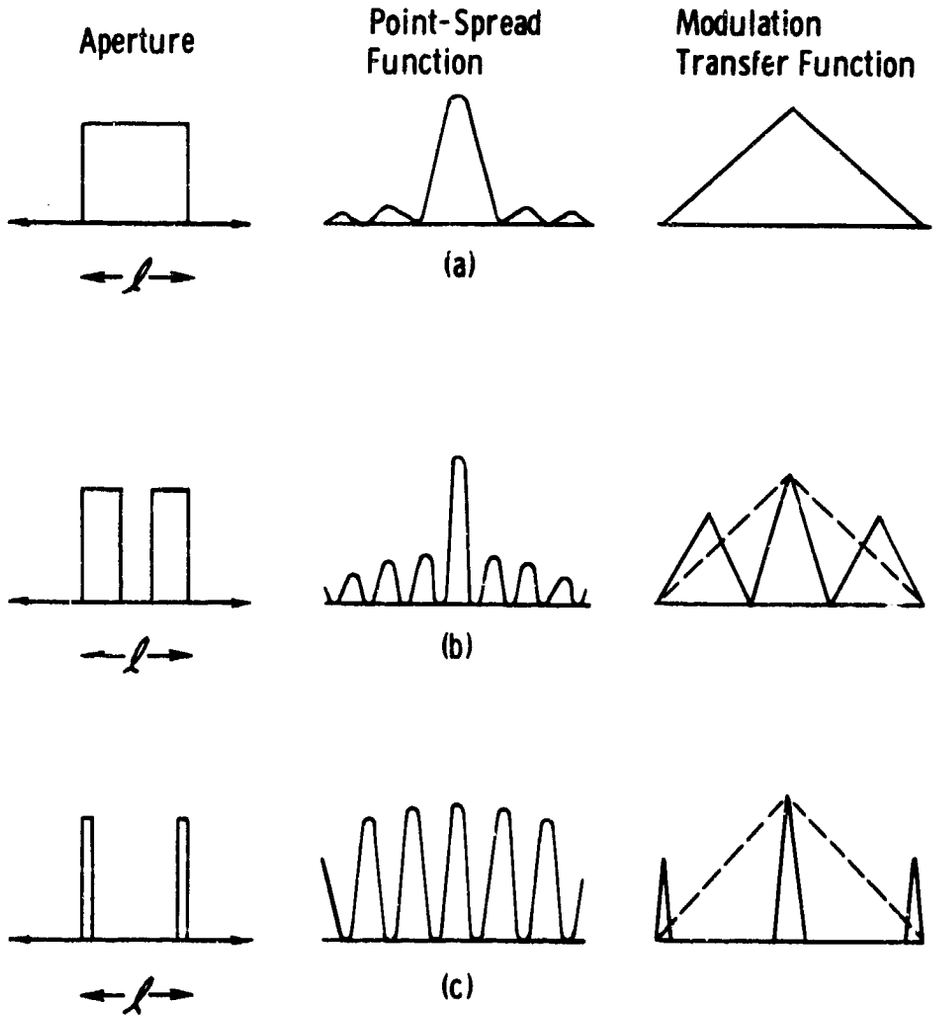

Figure 17. Point-spread functions and modulation transfer functions of partially filled apertures.

Then owing to the narrower width of the central lobe, the partially filled aperture must be said to provide better resolution than the filled aperture. We conclude that the resolving power of a partially filled aperture depends very much on the nature of the object.

A similar conclusion is reached by examination of the modulation transfer functions of Figure 17. The contrast of low-frequency sinusoidal components of an image is smaller for a partially filled aperture than for a filled aperture, but the contrast of high-frequency components is actually improved in the partially filled case. Thus whether the partially filled aperture gives a "better" or "worse" picture than a filled aperture depends on the exact frequency content of the object.

As pointed out by G. K. O'Neill in Appendix XIV, there are certain advantages to distributing the elements randomly over a partially filled aperture, for the symmetries which lead to high sidelobe levels are thereby destroyed. If N elements are placed at random positions on the ideal figure of a full aperture, the ratio of the peak intensity of the central lobe of the point-spread function to the mean intensity of the sidelobes is then 1/N. For large N a significant suppression of the sidelobes is achieved.

3. Atmospheric Limitations

Our discussion would be incomplete without mentioning briefly the subject of atmospheric limitations to resolution. The conclusion readily drawn here can be stated very briefly. imaging systems with partially filled apertures are in general subject to the same atmospheric limitations as are systems with filled apertures. Thus from the point of view of atmospheric effects, there is no advantage or disadvantage associated with a partially filled aperture.

B. SOME EXAMPLES OF PARTIALLY FILLED APERTURES

A wide variety of interesting geometrical distributions of small elements over a large partially filled aperture is conceivable. Certainly some distributions are more desirable than others in terms of sidelobe levels, width of the main lobe, etc. However, rather than delving into this distribution question, we prefer to mention a number of particular schemes that were suggested during the course of the summer study. In general these schemes are strongly motivated by techniques of radio astronomy.

1. Rotating Strip Telescope

In Appendix XV, the possibility of constructing a rotating strip telescope is considered by J. S. Wilczynski. The proposed instrument contains a "strip"

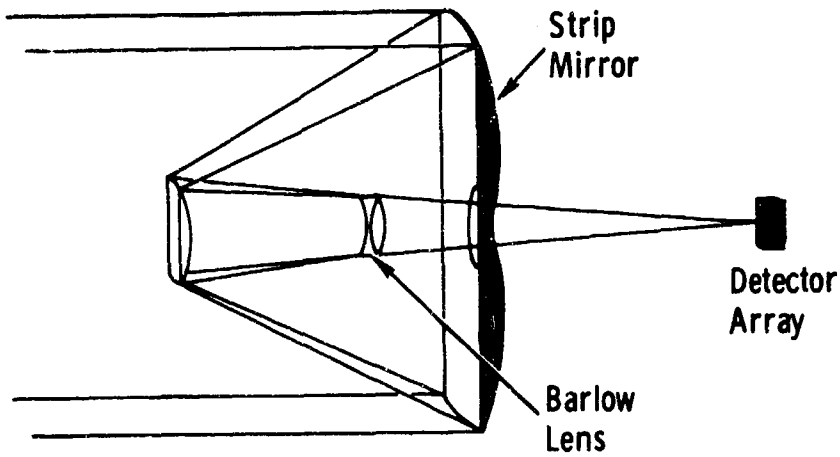

Figure 18. The "Strip" telescope.

primary mirror of rectangular aperture and of spherical form, a smaller secondary mirror which corrects spherical aberration, and a Barlow lens, as shown in Figure 18. The one-dimensional image may be detected by a photomultiplier array, fed by a fiber optics strip that dissects the image plane.

To obtain a full two-dimensional image from what is essentially one-dimensional data detected by the strip telescope, it is necessary to rotate the instrument and sample at various discrete azimuths. The number of samples required in such a case is derived in Appendix XII by R. N. Bracewell and R. C. Riddle.

A possible realization of such an instrument, which could provide a field of about 10 x 10 resolvable elements with a resolution of about 0.1 arc second, would utilize a 4" x 40" strip mirror and 20 photomultipliers. Thirty-one azimuth samples are required, and for an object of zero magnitude brightness an observation cycle of 2.5 seconds could be used. The detected data are combined and processed by a digital computer in about 1.5 seconds to obtain an image. For a more detailed discussion of this technique, see Appendix XV.

2. Optical Tee Aperture

In Appendix XVI the possible use of a "tee" aperture for surveillance problems is considered by R. H. Miller. The three elements (see Figure 19) must share a common focus. The chief advantage of this telescope would be its low weight. In addition, it might prove relatively simple to install in an aircraft. The practicality of such a device depends on how easily it can be constructed and how rigidly the elements can be held to the proper figure. Time did not permit an adequate study of either of these problems.

3. Analogs of the Covington-Drane and Mills-Cross Antennas

Optical analogs of the Covington-Drane and Mills-Cross antennas are discussed in Appendix XVII by G. O. Reynolds. Again the elements are assumed to share a common focus. As with the "tee" aperture, the practicality of these techniques depends on the ease of manufacture and the ease with which the overall figure can be held.

C. TEMPORAL SYNTHESIS OF A FILLED APERTURE WITH A DOUBLE-OBJECTIVE TELESCOPE

If the elements of a partially filled aperture are moved sequentially to occupy a variety of different relative positions, then by combination of the sequence of images so obtained it is possible to synthesize a completely filled aperture. While the combination of sequential measurements is common practice

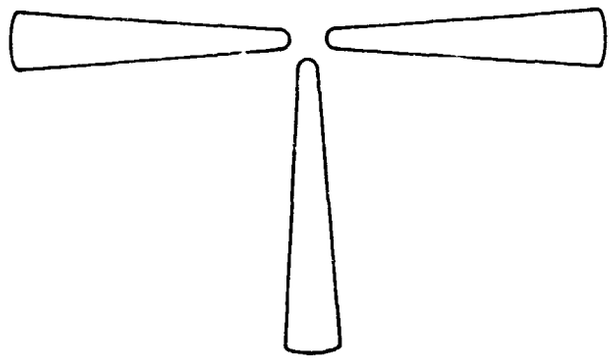

Figure 19. Optical tee aperture.

for interferometry at radio wavelengths, the particular realization considered here has significant differences. The differences are essentially those (outlined previously) that distinguish interferometric techniques from imaging with partially filled apertures. Thus in the present case of interest the individual elements share a common focus and trace out (in time) the figure of a larger mirror.

The particular realization of interest here is the double-objective telescope recently proposed by J. S. Wilczynski. We present only a brief discussion of the main elements of this technique; for a more complete treatment the reader may consult Appendix XVIII by Wilczynski.

1. The Double-Objective Telescope

The simplest realization of this sequential aperture synthesis technique would employ two optical elements sharing a common focus. Separate observations are made with the elements located at various relative positions, and a larger aperture is thereby synthesized.

If all possible relative positions of the elements allowed by the full aperture were actually used for separate observations, there would be considerable redundancy in the collected data. Thus just as the full aperture would make redundant measurement of the low-spatial-frequency components of the image, so the synthesized aperture would contain redundant observations at all but the furthest spacings of the two elements. In order to minimize the total time required for a complete measurement, it is desirable to remove as much of this redundancy as possible.

A possible approach employs two mirrors with hexagonal apertures occupying typical pairs of positions as indicated in Figure 20. One observation at one such pair will make do for all other "equivalent" pairs. Equivalent pairs have the same relative positions but occupy different locations in the full aperture and can be made to coincide with the typical pair by means of rigid body translations only.

2. Telescope Alignment

Two alignment requirements are critical for the success of this technique. First, it is necessary that the focal points of the two mirrors coincide during any one measurement. Second, it is necessary that this same focal point be common to every one of the sequence of measurements, or equivalently, that the entire synthesized aperture have a single focal point in space.

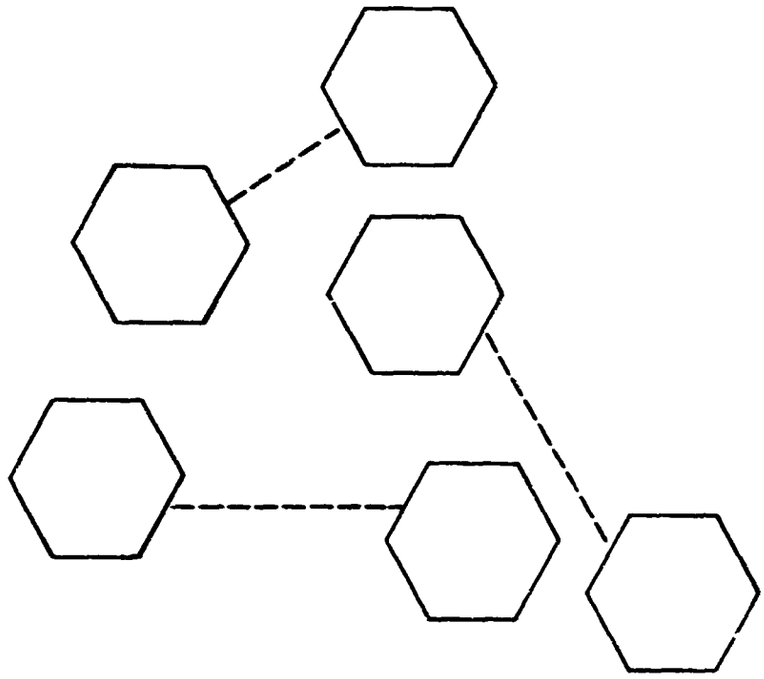

Figure 20. Typical hexagonal aperture pairs.

To align the telescope to the required accuracy, a convenient "reference" star is chosen, and the images of this star are in all cases made to coincide. To adjust the focal points of the two elements, movable compensating wedges and gimballed plane-parallel plates are envisioned, as indicated in Figure 21. An auxiliary interferometer provides superposition of the light received from the reference star via the two paths. The wedges are driven until maximum fringe visibility is observed, minimizing the path-length difference to better than $\lambda/20$. Tilt fringes are present if the images are angularly displaced, and are removed by motion of the gimballed plates. In this way the foci of the two elements are brought into coincidence.

To insure that the common image is at the same point for each of the sequence of observations, a very sensitive star tracker should provide sufficient accuracy for an aperture extension by at least a factor of 10. Thus the star tracker may be regarded as establishing a single reference point in space, with respect to which all alignments are made; this reference point is the focal point of the full synthesized aperture.

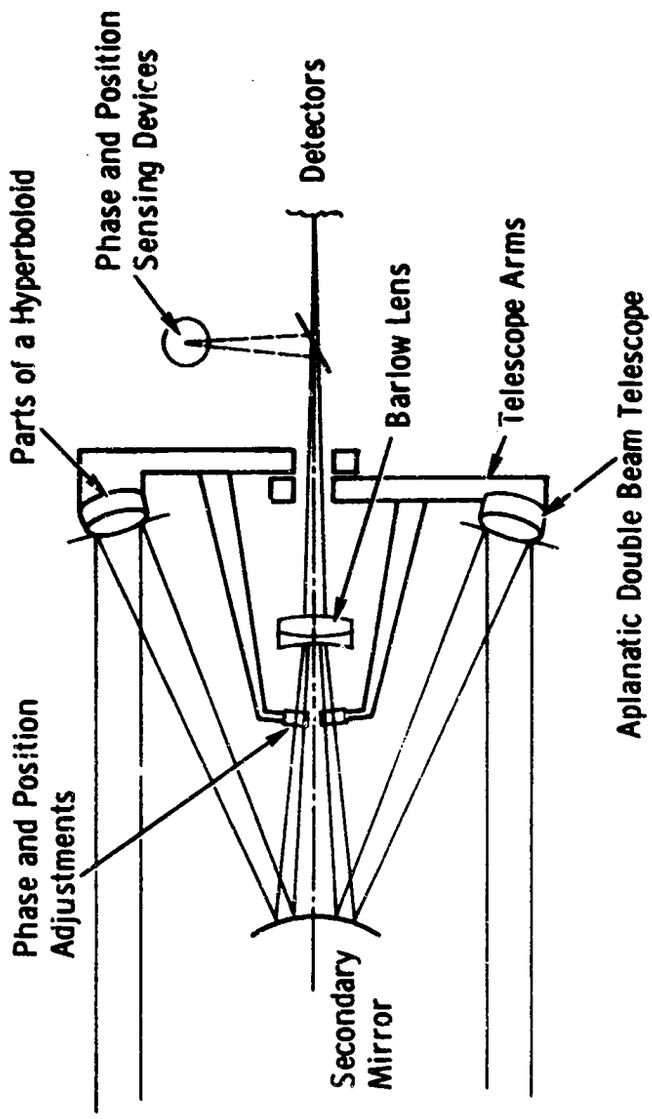

Figure 21. Configuration of the double-objective telescope.

3. Data Processing

The measurement technique described above collects spatial frequency information commensurate with the full range of spacings embraced by the telescope, and does so without unnecessary redundancy of the spacings of the two elements. Nonetheless, the lowest spatial frequencies, namely those corresponding to spacings embraced by the component elements individually, are present in every one of the sequence of measurements and therefore are measured with high redundancy. Thus if a sequence of 165 observations is performed,* these very low frequency components are present with 330 times their proper relative amplitudes.

To remove this undesired emphasis of the low-frequency components, it is necessary to perform certain data processing operations. There are several methods which will, in principle, allow the necessary operations to be performed. If each of the images obtained during the sequence of measurements is scanned and digitized, then a composite image may be obtained by simple addition of the component images. To remove the undesired low-frequency redundancy, the composite image may be Fourier analyzed digitally, and the low-frequency components properly attenuated. A second digital Fourier transformation then yields an image with a more proper balance of spatial frequency information.

If the image field for each individual observation contains 5000 x 5000 elements resolvable by the full synthesized aperture, then with a fast Fourier transform algorithm used on an IBM 7094-II computer, the operations would require a significant portion of a day. Faster computers (e.g., the IBM 360/67) can decrease this time somewhat, but with present computer technology it appears that image fields will be limited to less than 5000 x 5000 resolvable elements. Future developments in computer technology will undoubtedly alleviate this limitation.

Alternative methods of data processing utilize coherent optical analog techniques. If a photographic transparency of each of the component images is produced, their Fourier spectra may be obtained by placing the transparencies sequentially in a coherent optical processing system. To retain phase information in the frequency plane, a coherent reference wave is added in a manner quite similar to that employed in holography. If a multiple-exposure recording is made in the frequency plane with each of the component images present

*Extension of the aperture diameter by a factor of 11 requires 165 observations to obtain complete synthesis of two-dimensional objects with the telescope bandwidth.

sequentially, a composite frequency-plane transparency containing the full spatial-frequency data is realized. An appropriate attenuating mask placed in contact with the frequency-plane transparency will reduce the amplitude of the low-frequency components. Finally, an inverse Fourier transform, again performed by the coherent optical system, yields the final processed image.

The chief technical difficulties associated with this latter approach arise from the requirement that the phase distribution of the reference wave not change during the sequence of exposures in the frequency plane, and from the requirement that the original image be positioned in sequence with very high precision.

Further work is currently underway at IBM to bring the double-objective telescope, and the associated information processing, closer to practical realization.

D. COMBINATION OF ACTIVE FIGURE CONTROL WITH PARTIALLY FILLED APERTURE TECHNIQUES

The chief practical problem inherent in any technique employing partially filled apertures is to bring the surfaces of the individual elements into coincidence with the appropriate portions of the ideal figure of a filled aperture. To provide the extra structural rigidity required to hold a multitude of separate elements precisely in their proper positions, much of the possible savings in weight afforded by a partially filled aperture may in fact be lost.

As discussed previously on several occasions, it is possible to replace structural rigidity by the temporal stability of a high-quality laser source, and it would appear that such an approach is eminently well suited for use with partially filled apertures. Thus active figure sensing and control, combined with the use of partially filled apertures, will potentially provide savings in weight which far exceed the savings afforded by either technique individually. To date we know of relatively little attention that has been devoted specifically to the combination of these two approaches, and we hope that efforts will be initiated in the near future in this very promising area.

V
APERTURE SYNTHESIS WITH COHERENT ILLUMINATION

In the preceding discussions we have been primarily concerned with the formation of images of self-luminous objects and of objects illuminated by natural incoherent light. With the present state of laser technology, it is also possible to provide intense active illumination, thus potentially extending observation time to a full 24 hours.

While many present laser sources provide illumination which, due to multimoding and temporal instabilities, is at best only partially coherent, nonetheless sources do exist that can provide illumination with nearly perfect coherence.* We are concerned in this chapter with aperture synthesis techniques that rest critically on the use of active coherent illumination.

A. THE ACTIVE INTERFEROMETER

To this point in our discussion, the aperture synthesis techniques considered have rested on the use of clever and/or sophisticated collecting optics. When active illumination is used, it is also possible to gain spatial resolution

*Prominent among such sources is the 10.6 micron CO_2 laser; for a discussion of the state of the art in 10.6 micron technology, see Appendix XIX by R.H. Kingston.

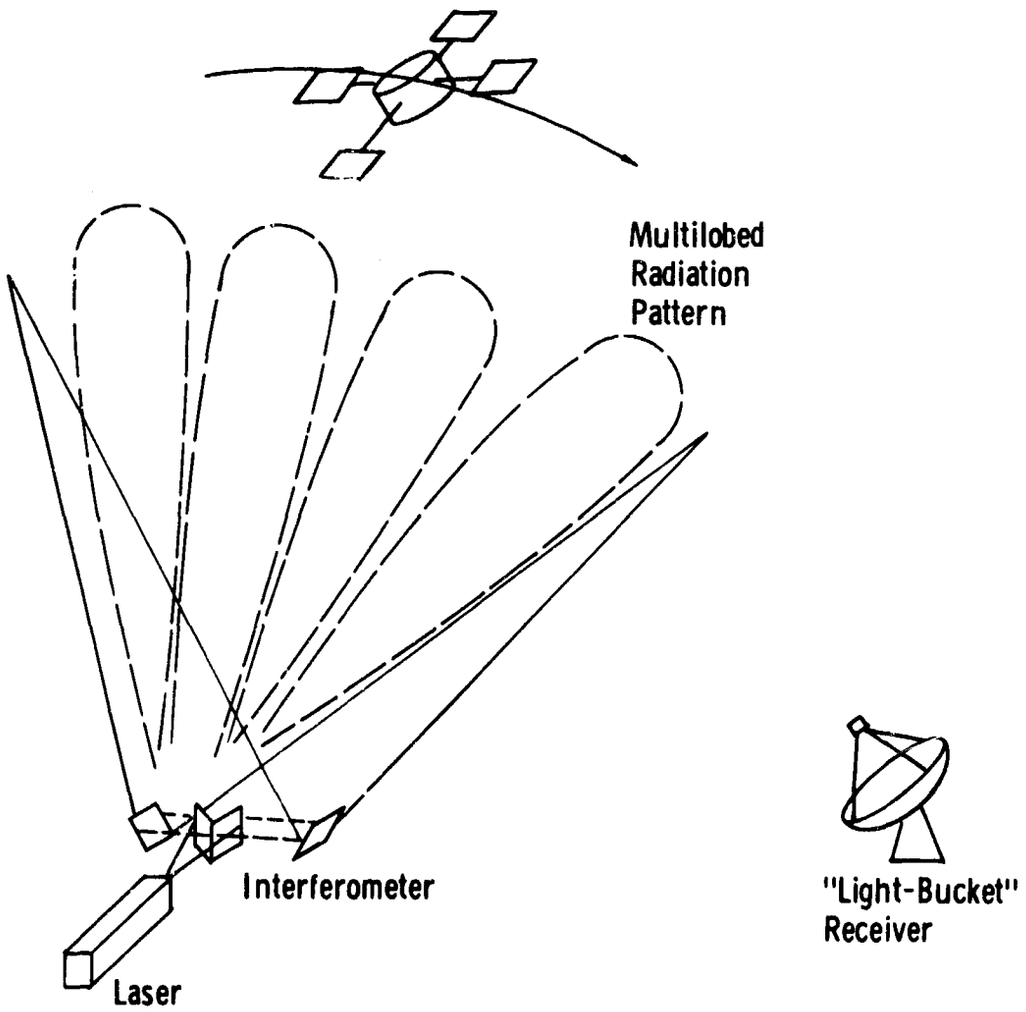

Figure 22. The active interferometer concept.

by the use of sophisticated transmitting optics. An example of this type of technique is the active interferometer recently proposed by B. C. Murray and discussed by him in detail in Appendix XX.

1. Principle of the Technique

The general nature of this technique is illustrated in Figure 22. A laser source illuminates the two elements of what might normally be considered a Michelson stellar interferometer. Interference of the two mutually coherent transmitted waves may be viewed as establishing a transmitted power pattern which varies sinusoidally with angle at a spatial frequency determined by the separation of the two transmitting elements.

Imagine a distant target crossing through the transmitted power pattern with constant angular velocity. If the size of the target is small compared with the width of a single lobe of the power pattern, then the power reflected from the target will undergo sinusoidal variations. If the power collected by a large "light-bucket" receiver is detected, then the resulting photocurrent will likewise oscillate sinusoidally. Suppose, however, that the target is somewhat larger in angular diameter than is a single lobe of the power pattern. The oscillations of reflected power will then be partially smoothed by the finite extent of the object, and the detected photocurrent will have a correspondingly smaller ac component. For an object which extends over many lobes of the transmitted power pattern, we would expect that the oscillations of the photocurrent would be nearly negligible. Thus by measuring the degree of modulation (or the "modulation index") of the photodetector output we are able to determine information about the size of the object passing through the multilobed beam.

There are various degrees of sophistication with which an active interferometer could be used. The simplest application might be to determine if a particular object is larger or smaller than some predetermined size. A more sophisticated use, which has correspondingly greater practical difficulties, is to determine the modulation index of the photocurrent as a function of the spacing of the transmitting elements. In principle, the space-frequency power distribution could be determined in this manner, and a symmetrized image of the object could be obtained.

2. Advantages and Practical Difficulties

There are two respects in which the active interferometer offers a significant advantage in some high-resolution imaging problems. First is the fact that a large "light bucket" may be used to collect the returning radiation; thus the primary collector can be badly aberrated without affecting the final spatial resolution of the system.

Second, and most important, is the anticipated low susceptibility of this technique to the atmospheric wavefront distortions which provide the practical resolution limit for most large-aperture imaging systems operating within the earth's atmosphere. Since the spatial information is ultimately encoded as a temporal modulation of the returning light, wavefront distortions on the return path are of little consequence. Atmospheric effects over the path from transmitter to target are important, however, for they cause motion and in some cases distortion of the power pattern through which the target passes. Fortunately, for ground-based illumination of objects orbiting above the earth's atmosphere, the two transmitted beams may be sufficiently narrow and their paths through the atmosphere sufficiently short that the primary atmospheric effect is a phase advance or retardation of one beam with respect to the other, but essentially no phase distortion within a single beam. Thus the atmosphere may swing the power pattern randomly over some angular extent, but it is believed that the atmosphere will introduce relatively little distortion of the pattern itself. While there undoubtedly will be some random phase modulation of the detected sinusoidal photocurrent, the ac power should be relatively unchanged, allowing spatial information to be extracted.

It should be noted that the above discussion is based on what is currently known about atmospheric propagation; interferometry experiments of the type described above have not, to our knowledge, been reported in the literature of atmospheric propagation, and the conclusions must therefore be regarded as tentative.

Note that while we have mentioned that atmospherically induced wavefront distortions on the return path do not affect the final resolution, we have not considered the effects of atmospheric scintillation. Presumably the collecting aperture can be made sufficiently large, compared with the granularity of the returned intensity pattern, to assure that there is considerable aperture smoothing of this scintillation. We consider a more serious source of degradation to be target-induced scintillation, which is observed whenever a diffusely reflecting object is illuminated with coherent radiation. This problem is treated in Appendix XXI by J. W. Goodman. There do exist situations, particularly at 10.6 micron wavelength with very small targets, for which target-induced scintillation can be a very significant effect, even for large collecting apertures. The reader may consult the appendix for more details.

Finally we should point out that use of the active interferometer in sophisticated modes of operation, which require changing the spacing of the two elements to gather considerable space-frequency information, would appear fraught with practical difficulties, especially for orbiting objects moving at typical high

angular velocities. It would therefore seem that the major utility of the active interferometer would be to determine whether the size of an object is greater or less than some limit.

B. DOPPLER-SPREAD IMAGING

We consider next an aperture synthesis technique which was reported on in some detail by R. E. Hufnagel at a previous Summer Study.[1] This technique has strong analogies with certain radar astronomy techniques which utilize doppler mapping to obtain spatial resolution.

The general nature of this technique is illustrated in Figure 23. A CW laser illuminates a distant satellite which is assumed to be rotating at a certain angular velocity about some axis of rotation. An optical system casts an image of the satellite on a line array of photodetectors, where a local oscillator signal passed directly from the laser is also introduced. The outputs of the heterodyne detectors are passed to spectrum analyzers, which present displays of spectral power vs frequency for each detector output.

For a rotating object there is a one-to-one relationship between the doppler shift of the reflect radiation and projected distance from the axis of rotation. Thus the displays of received power vs frequency are equivalent to displays of reflected power vs distance from the rotation axis. The optical system provides resolution in the dimension parallel to the rotation axis, while the doppler mapping provides resolution in the dimension normal to the rotation axis. Under many conditions the resolution achievable by doppler mapping can exceed the diffraction limit (or the atmospheric limit) to resolution achievable with the unaided imaging system, and therefore we may regard the doppler mapping method as an aperture synthesis technique.

Spatial resolution of the doppler mapping technique is limited by frequency resolution, which in turn is determined by atmospheric fluctuations and irregularities of satellite motion. The prime candidate for the laser source for this technique is the 10.6 micron CO_2 laser. For details the reader should consult the report of the 1966 Summer Study cited previously.

C. HOLOGRAPHIC ARRAYS

When an object is illuminated by coherent light, it is possible to form images holographically, as well as with conventional optics. We consider now the possibilities of aperture synthesis with holographic techniques, and in particular the use of holographic arrays. For a more detailed discussion of the various possibilities, the reader may consult Appendix XXII by J. W. Goodman.

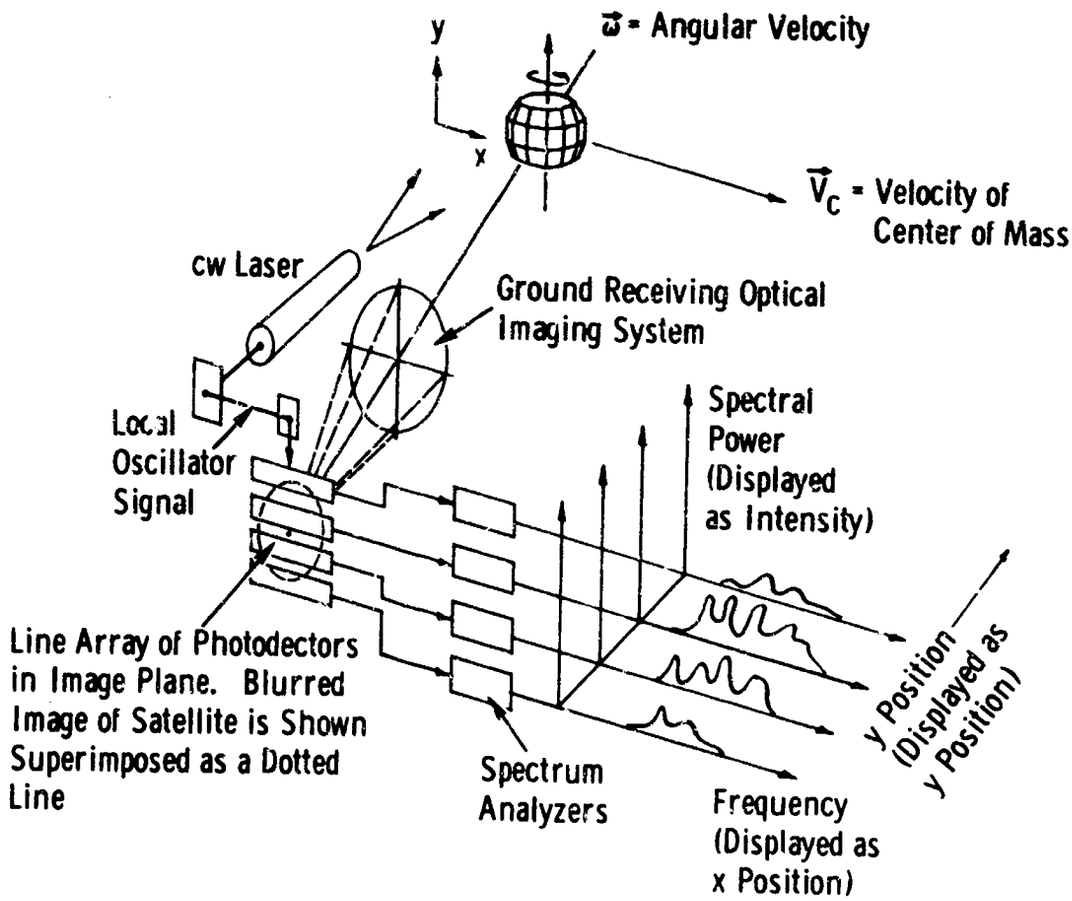

Figure 23. Doppler-spread imaging system.

Perhaps the most promising holographic technique involves the use of a collection of small telescopes operating side by side to form demagnified holograms of the wavefronts existing across their respective collecting pupils, as illustrated in Figure 24. The reference wave can be supplied externally (e.g., by a retroreflector), or, for long coherence length sources such as presently exist at 10.6 microns, the reference may be supplied locally. For image fields with only a modest number of resolvable elements (e.g., less than 1000 x 1000), electronic detectors may be used and the images may be formed from the detected data by a digital computer.[2] The resolution of the final image will be that appropriate to the aperture covered by the full array, rather than that dictated by one of the component telescopes.

The chief technical difficulties associated with this approach to aperture synthesis are related to the tolerances with which the positions of the various detectors must be known. The detector positions must be known to a fraction (say 1/4) of the period of the finest interference fringe. This information can be obtained with the help of an auxiliary sensing system and can be incorporated in the digital computations to assure that the data from the various apertures are added with proper phase relations.

A second practical difficulty is associated with radial object motion, which causes the interference fringes on the detectors to translate. The fringes can be "frozen" in time if a short pulse of illumination is used, but for orbital velocities the pulse durations required become uncomfortably short. This problem can be alleviated if the object is illuminated only at times when its radial velocity component is low. A more satisfying solution is to supply the capability of frequency translating the reference wave to approximately match the doppler shift of the target return, thus compensating for fringe motion and allowing longer illuminating pulses to be used.

If these technical difficulties can be overcome, holographic arrays have a number of interesting and unique attributes that may make them very useful. It is particularly instructive to compare holographic arrays with other aperture synthesis techniques, such as feedback-controlled optics and partially filled apertures. As with the case of holographic arrays, both of these latter techniques synthesize a large aperture by properly combining information from a number of smaller apertures. The fundamental aspect that distinguishes holography from other techniques is that various pieces of collected data are combined after detection rather than before detection. Thus the feedback-controlled optics and the partially filled apertures must be properly aligned before the detection process, whereas the holographic system can effectively align the elements a posteriori during the final image-forming computation.

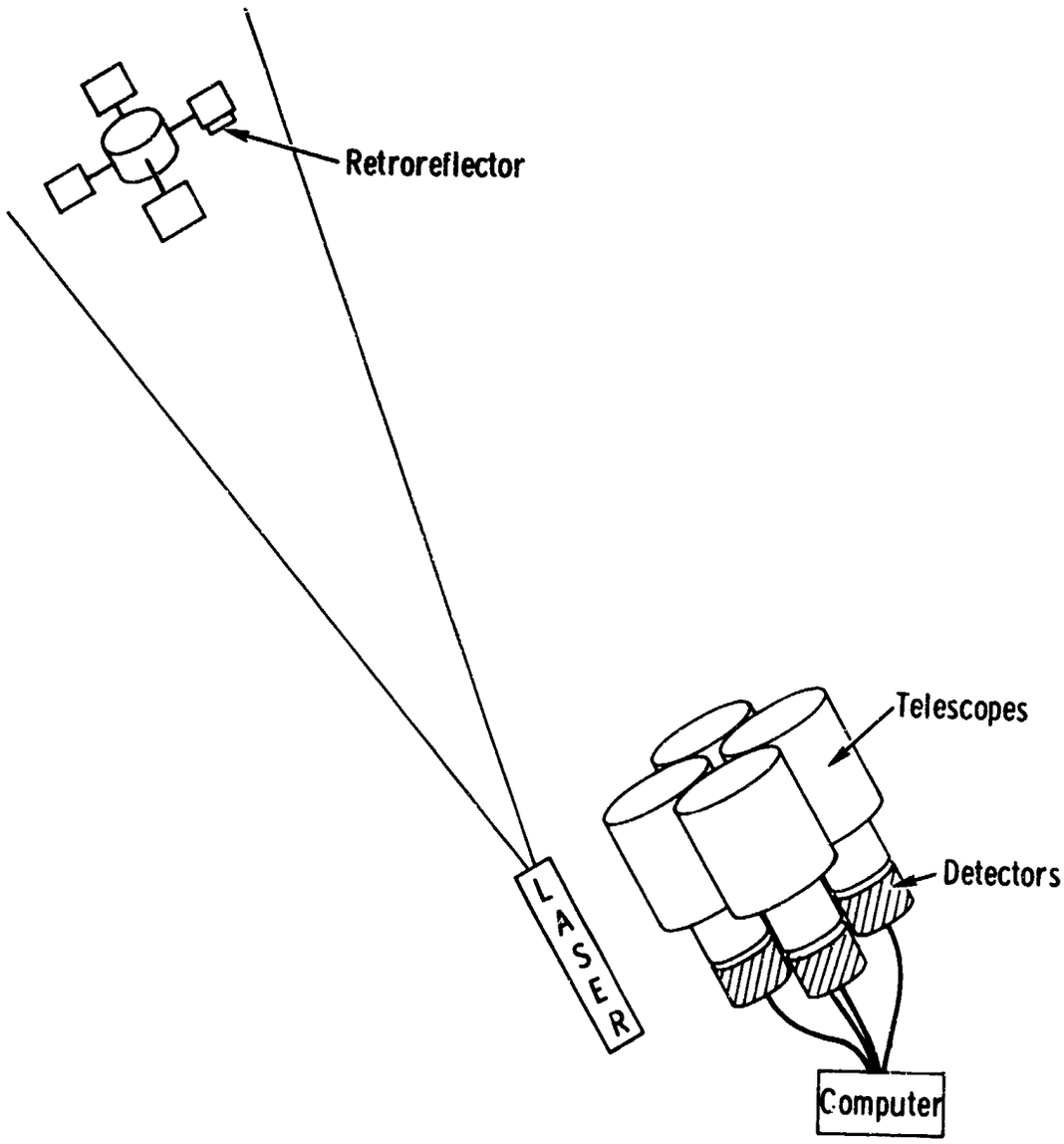

Figure 24. Holographic array.

Other important aspects of holography are its superior noise performance (see Appendix XXIII by J. W. Goodman) and its superior imaging capabilities in the presence of certain types of atmospheric inhomogeneities and aberrations.*

D. OPTICAL SYNTHETIC-APERTURE RADARS

The successful application of synthetic-aperture radar principles in the microwave region of the spectrum was a strong motivating factor in the formation of the summer study reported here. We turn now to a consideration of the basic principles of the synthetic-aperture radar technique, and to the practical difficulties associated with their application at optical frequencies. For a more detailed treatment of the basic theory, the reader may consult any of a number of references in the open literature,[3,4,5] or Appendix XXIV by J. S. Zelenka.

1. Basic Principles

The basic principles of the synthetic-aperture radar technique are illustrated in Figure 25. A moving vehicle (e. g., an aircraft or satellite) carries an active source of coherent illumination over a straight-line path. The illumination is directed toward a distant object of interest, which is assumed to be one side of the flight path (in the microwave radar case, the object of interest is ground terrain). The moving vehicle also carries a small-aperture coherent receiver, which detects and records both the amplitude and the phase of the target returns along the flight path. In the microwave radar case, the transmitting and receiving apertures are generally a common small antenna; at optical frequencies small antennas (i. e., mirrors or lenses) are relatively inexpensive, and physically separate apertures may readily be used.

The record of the amplitude and phase of the radar returns is ultimately processed to yield an end product which is a two-dimensional map (or "image") of the reflectivity distribution of the illuminated object. The two dimensions of this map are in the direction normal to the flight path and in the direction parallel to the flight path. Resolution in the "range" dimension (i. e., normal to the flight path) is generally obtained by the pulse-echo timing, the usual radar range measurement technique. Similar information can be obtained with a CW system if the illuminating beam is made narrow in the range dimension and is scanned in range.

Azimuthal resolution is obtained by processing the entire azimuthal record received from each range resolution element. It is in this dimension that

*See Reference 1, page 2 of this report.

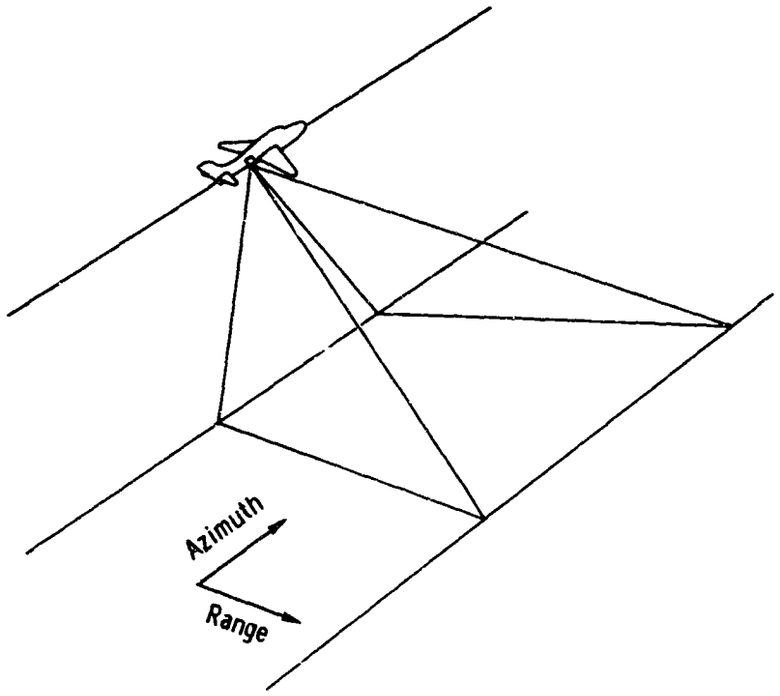

Figure 25. Synthetic-aperture radar geometry.

aperture synthesis takes place. A given azimuthal record may be regarded as a recording of the amplitude and phase distribution of the radiation along the flight path due to a single range resolution cell. In one of the most successful processing techniques, an optical wave is produced with a duplication of the recorded amplitude and phase distribution. This optical wave is focused in the azimuth dimension by appropriate optical elements to produce a final image.[5]

The resolution obtained in the azimuthal dimension can be far better than the diffraction limit of the small collecting aperture carried along the flight path. The resolution achievable is in fact determined by the distance the vehicle travels along the flight path while illuminating and receiving radiation from a given point on the object. The wider the transmitter and receiver beamwidths, the further the vehicle travels while receiving reflected radiation from a given object point, and the better the final azimuthal resolution.

If we assume a common beamwidth θ for the transmitting and receiving apertures, and if the range to the object point in question is R, then the vehicle travels an approximate distance θR while receiving returns from that point. The maximum azimuthal resolution obtainable is that of a diffraction-limited

aperture of length $2\theta R$, where the factor of 2 can be shown to arise due to the fact that both the sensor and the illuminator move along the path. The minimum resolvable dimension ρ_s at range R is therefore given by

$$\rho_s = \frac{\lambda R}{2\theta R} = \frac{\lambda}{2\theta} \tag{25}$$

which we note is independent of range. When the spread θ of the transmitting and receiving beamwidth is due solely to diffraction by the finite extent D of the apertures, then $\theta \cong \lambda/D$ and

$$\rho_s \cong \frac{D}{2} \tag{26}$$

We now turn to the question of just when synthetic-aperture techniques are worth considering, given that optical elements of dimension D are available for use. A lens or mirror of aperture D is capable of achieving a resolution $\rho_c = \lambda R/D$ at range R when used in the conventional imaging mode. When used in a synthetic-aperture mode, the same elements will allow a potential resolution $\rho_s = D/2$. We find, then, that the resolution of the synthetic-aperture system can exceed that of the conventional imaging system only when

$$R > \frac{D^2}{2\lambda} \tag{27}$$

However, this comparison is not entirely fair, for it is always possible to defocus the elements of the synthetic-aperture system (or to artifically reduce their size with aperture stops) to produce beamwidths greater than λ/D, and therefore to allow resolutions smaller than $D/2$. Thus the resolution obtainable from a synthetic-aperture system is superior under a far wider range of conditions than Eq. (27) would imply. A true test of the value of synthetic-aperture techniques can be made only if the resolution required of the system is explicitly stated at the start. In such a case we are led to the obvious conclusion that synthetic-aperture techniques are worth pursuing only when the resolution required of the system exceeds the diffraction limit of the available elements.

2. Practical Difficulties at Optical Frequencies

The most promising source for an optical synthetic-aperture radar is the 10.6 micron CO_2 laser. Sources of this type now under development will have adequate power output and coherence length for this task, at least at modest ranges (i.e., a few kilometers). Given that an adequate source will soon be available, however, there remain serious practical difficulties in the realization of a useful system.

The most important practical problem is associated with the accuracy with which the positions of the source and sensor must be predictable, controllable, or measurable along the flight path. As mentioned previously, the sensor detects radiation from any given object point only over a path of length $L = \theta R$. Accurate knowledge of the phase distribution across the reflected wavefront can be obtained from the measurements only if the unknown variations of vehicle position normal to the flight path are at most a small fraction of a wavelength while the vehicle travels a distance $L_{max} = \theta R_{max}$, where R_{max} is the maximum range of interest. If such position errors do occur in excess of a fraction of a wavelength, the recorded phase information will contain aberrations that ultimately lead to a reduction of resolution in the final azimuthal imaging process.

In the microwave radar case this problem is overcome by the use of accurate position sensors on board the vehicle, which allow appropriate compensation of the detected data. However, the sensing of the position of a moving platform to a fraction of an optical wavelength is not currently feasible, and therefore the problem is a very serious one for an optical system.

A partial saving grace in the optical case is the fact that the path lengths required to synthesize an aperture of given resolution are far shorter than those required for a comparable microwave resolution. Thus, since the ratio of the wavelength in the two cases is about 10^5, the requirement for 10^5 times greater accuracy of source and sensor position in the optical case is partially compensated by the fact that the synthetic apertures may typically be 10^5 times shorter in the optical case.

As a consequence of these considerations it becomes evident that vibration of the vehicle is the major source of concern in the optical case. During the course of the summer study, consideration was given to the vibration characteristics of the RB-50 aircraft, and it was concluded that a vibration mount currently under development would provide a workable solution in some cases (see Appendix XXXV by W. C. Schoonover in the classified supplement to this report). There is, of course, extra weight and cost associated with the use of a vibration mount, and in each individual case it must be determined whether that weight and cost could be more profitably invested in a larger optical element to allow conventional imaging with the required resolution.

There are other practical problems which also deserve mention here. First, because the optical synthetic apertures will in general be far shorter than their microwave counterparts,* the range information must be sampled with extreme rapidity. Since all range resolution elements must be sampled several

*For example, a 1 meter synthetic aperture would be quite useful at optical frequencies, but of little interest at microwave frequencies.

times during the formation of the synthetic aperture, a pulsed system does not appear attractive, and a very rapid scanner would be required for the transmitter. Examination of the requirements for one particular application (Appendix XXXV) indicates that kilohertz scanning rates are required. Such scanners may exist in the foreseeable future, but much developmental work still remains.

Finally we point out that atmospheric turbulence poses a limit to the maximum useable dimension for a synthetic aperture. Presently available theoretical results indicate that at 10.6 microns, atmospheric effects encountered in air-to-ground imagery would typically limit useful aperture sizes to the range of 0.5 to 5 meters, depending on target range and seeing conditions. Little experimental data is yet available in this area.

E. REFERENCES

1. R. E. Hufnagel, "A Doppler Spread Imaging System," in Ref. 1, page 2, Vol. 2, Appendix 35, pp. 239-246.

2. J. W. Goodman and R. W. Lawrence, Appl. Phys. Letters, 11, 77 (1967).

3. L. J. Cutrona et al, IRE Trans. on Military Electronics, MIL-5, 127 (1961).

4. C. W. Sherwin, J. P. Ruina and R. D. Rawcliffe, IRE Trans. on Military Electronics, MIL-6, 111 (1962).

5. L. J. Cutrona et al, Proc. IEEE, 54, 1026 (1966).

VI
OBJECT RESTORATION BEYOND THE DIFFRACTION LIMIT

For many years it was believed that the Rayleigh limit to resolution (i.e., an angular resolution of 1.22 λ/D, where D is the diameter of the optics) represented a fundamental and immutable limitation to the resolving power of any optical system. More recent work, including that of Toraldo di Francia,[1] H. Wolter,[2] J. L. Harris,[3] and others,[4,5] has shown that for a certain class of objects and for an ideal noiseless imaging system, postdetection processing can restore image detail, allowing resolutions far better than the Rayleigh limit to be achieved. It was also recognized that noise poses the fundamental limit to the resolution that can be retrieved by postdetection processing, and only in the very recent past have noise analyses of the restoration process been carried out. This report contains two appendixes, XXVI by C.K. Rushforth and XXVII by J. J. Gustincic and G. J. Buck, which represent the most recent analyses of this statistical problem. In this chapter we briefly outline the restoration problem and present the conclusions of these very recent studies.

A. NOISELESS OBJECT RESTORATION

An optical imaging system, be it coherent or incoherent, responds only to those spatial frequencies that lie below a certain cutoff frequency f_c. In the absence of noise, it is in principle possible to determine the exact Fourier

spectrum of the image.* If we further assume that we have exact knowledge of the transfer function of the system, we may also specify, without error, the Fourier spectrum of the object at all frequencies less than f_c (provided the transfer function is nonzero for $|f| < f_c$).

We now restrict attention to the class of bounded objects (i.e., objects which are nonzero only within some finite spatial region). Such objects can be shown to have Fourier spectra which are analytic functions of frequency. It follows that, from observations of the object spectrum within the bandpass of the imaging system, it is in principle possible to apply analytic continuation to determine the spectrum at frequencies outside the passband. Thus resolution beyond the classical diffraction limit must indeed be possible for a perfectly known noise-free system, provided the object is of bounded extent.

There are many ways in which the desired analytic continuation can be performed. Perhaps the most elegant method utilizes the eigenfunctions of the finite Fourier transform operation. Since this method (and closely related variants) is frequently utilized in the appendixes, we outline it briefly here. To begin, we note that the eigenfunctions of the integral equation

$$\alpha_n \psi_n(x) = \int_{-f_c}^{f_c} e^{i2\pi fx} \psi_n(f)\, df \tag{28}$$

are the prolate spheroidal wave functions studied by Slepian, Pollak, and Landau[6, 7] and have the interesting and important property that they form a complete orthogonal set on both the finite interval $(-f_c, f_c)$ and the infinite interval $(-\infty, \infty)$. This fact suggests the possibility of representing the Fourier spectrum $O(f)$ of the object at all frequencies by the series

$$O(f) = \sum_{n=0}^{\infty} a_n \psi_n(f) \qquad -\infty < f < \infty \tag{29}$$

and determining the coefficients a_n from knowledge of $O(f)$ in the finite interval $(-f_c, f_c)$. This can in fact be done, the a_n being given explicitly by the equation

*For coherent illumination we deal with the amplitude distributions of the object and image, while for incoherent illumination it is the intensity distributions that are of concern.

$$a_n = \alpha_n^{-1} \int_{-f_c}^{f_c} \psi_n(f)\, O(f)\, df \tag{30}$$

where α_n is the known eigenvalue corresponding to the eigenfunction ψ_n. Thus the combination of Eqs. (29) and (30) provides a specific method for achieving analytic continuation in the noise-free case. Note that even in the absence of noise, only a finite number of terms of Eq. (29) could be utilized in practice, and the restored O(f) will be accurate over only a finite spectral region, which nontheless may far exceed the original bandpass of the optical system. The final restored object distribution is found, of course, by a Fourier transformation of the restored object spectrum.

B. OBJECT RESTORATION WITH NOISE

The preceding discussion has assumed perfect knowledge of the transfer function of the imaging system and noise-free measurement of the image distribution. In practice, the transfer function may often be known to a high degree of accuracy, but the assumption of a noise-free image is generally unrealistic. Film-grain noise or electronic detector noise are invariably present; a more fundamental source of noise is the statistical fluctuation of photon arrivals, which ultimately contributes uncertainty in any measurement. A complete theory of object restoration must take noise into account, utilizing the techniques of statistical estimation theory.

Appendixes XXVI and XXVII treat the one-dimensional restoration problem with noise. Appendix XVIII by S. H. Lerman discusses extensions of the results to two-dimensional problems. In all cases the noise is treated as additive, gaussian, and statistically independent of the object. We realize, of course, that the noise sources of real interest (i. e., film-grain noise and electronic shot noise) are multiplicative, not additive, and that their statistics are in general not gaussian. However, to date the difficulties of analysis have precluded a completely satisfying solution of the multiplicative-noise problem. It is the belief of those involved in the analysis that the use of a more accurate statistical model will change the details of the solution but will not greatly affect the broad conclusions.

The analyses cited have yielded similar and not unexpected results. Specifically, there is general agreement that very substantial S/N ratios are required to achieve significant improvements in resolution. Just how high the

S/N ratio must be depends in an important way on the complexity of the image (more specifically its space-bandwidth product) before and after restoration. If the object is very poorly resolved by the original optical system, then a modest increase in resolution (i.e., adding only a few additional resolvable elements) is a significant improvement and would appear achievable with reasonably high S/N ratios. However, if the image is extremely complex at the start (e.g., an aerial reconnaissance photograph), the addition of only a few resolvable elements is quite insignificant. On the basis of the analyses that are available at this time, the S/N ratios required to achieve a significant improvement of resolution in this latter case appear unrealistically high.

These statements should not be taken to imply that research in object restoration will be without future benefits, for there clearly do exist a multitude of imaging problems, military and nonmilitary, in which the original image is very poorly resolved and the S/N ratio is high. We might also point out that in microscope imagery of time-invariant specimens, rather enormous S/N ratios (limited primarily by photon statistics) can be achieved by slowly scanning the image with a very sensitive photoelectric detector, and therefore object restoration may find useful application in this area. In addition, it should be appreciated that when information less complete than full object restoration (e.g., discrimination, counting, determination of size and general shape) is desired, significant improvements appear achievable by postdetection processing with far less stringent requirements on S/N ratio.

Finally, it should be emphasized that, in spite of the very significant advancements of the analytical status of this problem, as represented particularly by the appendixes to this report, the theory cannot yet be said to be in a completely satisfying form. In particular, further attention should be devoted to the multiplicative noise problem; in addition, consideration of the optimum use of a priori information and of the performance criteria appropriate to the analyses is warranted.

Digital simulations of object restoration problems are currently being performed by J. L. Harris, Sr., at the Visibility Laboratory of the University of California at San Diego. The results of these experiments should most certainly be monitored and compared with the predictions of the existing theory.

C. REFERENCES

1. G. Toraldo di Francia, Nuovo Cimento Suppl., 9, 426 (1952).

2. H. Wolter, in Progress in Optics, Vol. 1, Chap. V, Sect. 4.6, E. Wolf, Ed., North-Holland Publishing Co., Amsterdam (1961).

3. J. L. Harris, J. Opt. Soc. Am., 54, 931 (1964).

4. C. W. Barnes, J. Opt. Soc. Am., 56, 575 (1966).

5. B. R. Frieden, J. Opt. Soc. Am., 57, 1013 (1967).

6. D. Slepian and H. O. Pollak, Bell Syst. Tech. J., 40, 43 (1961).

7. H. J. Landau and H. O. Pollak, Bell Syst. Tech. J., 40, 65 (1961).

VII
MISCELLANEOUS APERTURE SYNTHESIS TECHNIQUES

A multitude of known techniques for improving the resolution of optical systems beyond the usual diffraction limit have not been covered in our preceding discussions. For the most part, these techniques utilize specialized types of a priori information, taking advantage of, for example, known restrictions to the polarization, spatial frequency content, or temporal frequency content of the object. Fortunately these techniques are well covered in Appendix XXXIII by A. W. Lohmann, who has supplied a number of important references and has placed the multitude of techniques in perspective. Unfortunately there was not sufficient time during the study to examine each of these techniques individually from the point of view of their applicability to Air Force problems, but we do feel that such an effort would be well justified. Perhaps one of the useful functions of this report will be to stimulate further thought on these techniques, hopefully arriving at a match with existing practical problems.

VIII
CONCLUSIONS AND RECOMMENDATIONS

In the previous chapters we have outlined the present status of the field of synthetic-aperture optics. The reader will note that the ideas presented and discussed are all at a very early stage of development. It is in fact far too early to recommend a specific systems implementation for any of the techniques considered. Likewise, the time is not yet ripe for development work in this new field. We therefore restrict our recommendations to the areas of research which we feel can be most profitably pursued at this time.

A. INTERFEROMETRY

Nearly 50 years have passed since the early experiments of Michelson and Pease with their 20-ft interferometer. During this time the subject of interferometric image formation at optical frequencies has not received wide attention, although such ideas have played a role of fundamental importance in radio astronomy. The status of optical technology has, of course, advanced enormously in this 50 year period. We feel that the time is now ripe for a re-evaluation of interferometry techniques, taking into account the new advances of technology.

Of particular importance has been the development of electronic detector technology. It is now quite reasonable to consider a variety of possible electronic techniques for measuring both the amplitude and the phase of the complex visibility function; such techniques will undoubtedly be far more sensitive, reliable and flexible than methods which rely solely on the human eye.

Also important is the potential ability to abandon the spatial rigidity of an interferometer at the price of constructing a sophisticated optical delay line. The delay line must be programmed to track the object and must be feedback-controlled to compensate for baseline instabilities. The realization of such a delay line, even of rather short length, is a formidible task. However, the potential rewards are sufficiently great to justify that more detailed thought be given to means for constructing such a device.

The gains to be had from further research in interferometry must be viewed as long-term ones. In military applications, the objects of concern are generally moving rapidly; for such objects it would be overly optimistic to assume that in the near future interferometry will allow more than size determination or, at best, the addition of a few resolution cells to an otherwise unresolved object. On a longer time scale, however, there is reason to believe that interferometry techniques may ultimately be applicable to a wider class of problems. This possibility will be strongly dependent on the outcome of research on simple interferometers, and on the origination of new techniques for collecting large amounts of fringe-visibility data rapidly.

We should also point out the possible benefits of this type of research to problems of astronomy. Any advances in the application of interferometry techniques to military problems would almost certainly also find applications in the field of astronomy. Indeed from a scientific point of view it may be in this latter field that the most important applications of synthetic-aperture optics are ultimately found.

Recommendation:

We recommend the initiation of a program of research in the application of electronic fringe-detection techniques to the problem of image formation with the Michelson interferometer. Work in the immediate future should be concentrated on a rigid-baseline system of limited length (i.e., longer than 1 meter but not longer than Michelson's original 20-ft instrument). While in early work the detection of fringe amplitude can quite properly be emphasized, this should not exclude a significant effort devoted to detection techniques for extracting both amplitude and spatial phase simultaneously. In the future attention should also be devoted to the problem of realizing an optical delay line of limited length which would allow the rigidity of the interferometer system to be abandoned.

In a related area, we feel that the three-element interferometry technique for overcoming atmospheric "seeing" effects may find application with existing large-aperture telescopes. This possibility is sufficiently important to warrant a separate recommendation.

Recommendation:

We recommend the initiation of a program of research in the application of the Jennison three-element interferometry technique to existing large-aperture telescopes. This program should be exploratory in nature, with consideration given to various possible methods for implementing the technique The program should include an evaluation of the sensitivity of each method and should provide estimates of the observation times required for objects of both military and astronomical interest.

B. FEEDBACK-CONTROLLED OPTICS AND PARTIALLY FILLED APERTURES

In the deployment of large-aperture optical systems in space, significant problems are introduced by the heavy weight of the primary mirror and by the requirement that the mirror hold its figure under conditions of extreme thermal changes. The weight problem can be greatly alleviated if a partially filled aperture is employed, and the stability problem appears solvable by the use of active figure sensing and control.

The chief practical problem associated with the use of a partially filled aperture is that of bringing the surfaces of the individual elements into coincidence with the appropriate portions of the ideal figure of a filled aperture. The techniques of active figure sensing and control are ideally suited to this problem. We believe that a combination of active figure control and partially-filled-aperture techniques will provide savings in weight which far exceed those afforded by either technique individually. To date we know of relatively little attention that has been devoted specifically to the combination of these two approaches.

It should be remembered that, due to atmospheric "seeing" effects, it is pointless to increase the aperture of an earthbound imaging system beyond a certain diameter corresponding to the maximum resolution allowed by the atmosphere. However, for satellites in high orbits, or for space-to-space imaging problems, the use of servo-controlled partially filled apertures seems attractive.

Recommendation:

We recommend that an effort be initiated to apply the techniques of active figure sensing and control to an optical system with a partially filled aperture. Attention should be devoted to determining the most desirable distribution of elements over the aperture and to determining which active sensing techniques

are best suited to the various possible configurations. While the techniques will ultimately be of most use in orbiting optical systems of very large aperture, initial work can most reasonably be done with apertures of modest size under controlled laboratory conditions.

C. APERTURE SYNTHESIS WITH COHERENT ILLUMINATION

With the present state of laser technology it is possible in some cases to provide intense active illumination of the object. If in addition this radiation is highly coherent, then a number of aperture-synthesis techniques can be envisioned which otherwise could not be considered. Thus the availability of long coherence length sources would significantly extend the possibilities of aperture synthesis.

At present the only source with adequate coherence length and power to be of great interest in this field is the CO_2 laser at 10.6 microns wavelength. However, the state of the art in coherent sources is improving rapidly, and alternative sources may soon be available.

The possibility of constructing holographic arrays, with detectors coupled through a digital computer, is an intriguing one, particularly in view of the possibility of compensating for errors of detector position a posteriori rather than before the detection process. However, the present limitations of the source and sensor technology are such that strong concentration on the holographic techniques themselves would be premature. Rather, we feel that emphasis on the source and sensor technologies required to make such techniques feasible is more proper at this time. The results of such research would be beneficial to the entire class of aperture synthesis techniques that rest on the use of coherent illumination.

Recommendation:

We recommend continued support of research on sources of intense optical radiation, but with an added emphasis on the achievement of long coherence length. Minimum coherence lengths of interest are of the order of a few kilometers, but in many applications several hundred kilometers would be required.

We recognize that prototype sources with many of the desired characteristics now exist at 10.6 micron wavelength. Unfortunately, present detector technology at this wavelength does not permit full exploitation of these sources. We therefore further recommend support of research on low-noise distributed electronic sensors, particularly at 10.6 micron wavelength, such as would be suitable for holography and other image-detection techniques. The minimum

number of resolvable elements that would be of interest in most Air Force problems is of the order of 30 x 30, but the availability of detectors with 500 x 500 resolvable elements would vastly broaden the class of problems to which coherent aperture-synthesis techniques could be applied.

D. RESEARCH IN OTHER AREAS

Finally, we wish to emphasize that the particular recommendations outlined above are in no way intended to limit the breadth of activity in the field of optical aperture synthesis. We have attempted to focus attention on those particular aspects of the problem that we feel need most immediate attention. We hope that new techniques and ideas that arise will receive serious consideration and will be supported in accord with their merits. In fact we believe that stimulation of further activity in the field of optical aperture synthesis is one of the most important functions of this study and this report.