AD 678853

DEVELOPMENT OF INDIRECT BLOOD PRESSURE SENSING TECHNIQUE FOR AEROSPACE VEHICLE AND SIMULATOR USE

VOLUME II. DESIGN CHARACTERISTICS AND OPERATING INSTRUCTIONS

RAY W. WARE, MD
CHARLES J. LAENGER, SR.
CHESTER A. HEATH

Southwest Research Institute

D D C
DEC 10 1968

AUGUST 1968

This document has been approved for public release and sale; its distribution is unlimited.

Best Available Copy

AEROSPACE MEDICAL RESEARCH LABORATORIES
AEROSPACE MEDICAL DIVISION
AIR FORCE SYSTEMS COMMAND
WRIGHT-PATTERSON AIR FORCE BASE, OHIO

AMRL-TR-67-201 (II)

DEVELOPMENT OF INDIRECT BLOOD PRESSURE SENSING TECHNIQUE FOR AEROSPACE VEHICLE AND SIMULATOR USE

VOLUME II. DESIGN CHARACTERISTICS AND OPERATING INSTRUCTIONS

RAY W. WARE, MD
CHARLES J. LAENGER, SR.
CHESTER A. HEATH

This document has been approved for public release and sale, its distribution is unlimited.

FOREWORD

This report was prepared by Southwest Research Institute, 8500 Culebra Road, San Antonio, Texas, under Contract AF 33(615)-5283, and in support of Project 7222, "Biophysics of Flight." The contract was designated as Project No. 14-1936 by SwRI. The work was administered by the Environmental Medicine Division, Biomedical Laboratory, Aerospace Medical Research Laboratories, Wright-Patterson Air Force Base, Ohio. The contract monitors were George Potor, Major, USAF; A.S. Hyde, MD; and Michael McCally, MD. This report covers the work performed from 14 June 1966 through 28 February 1968. Design, development, and test work were performed at Southwest Research Institute by the following: Ray W. Ware, MD; Charles J. Laenger, Sr.; Raul San Martin, MD; Chester A. Heath; Robert J. Crosby; Menan Hanz; Alphonse Diaz de Leon; and Charles B. Dreyer.

Personnel of other facilities cooperated in this program by testing the method and equipment in various clinical, laboratory, and field applications, and environments. These personnel reported test results, supplied data, and made valuable suggestions which were used in design and development of the ultrasonic Doppler blood pressure system. Participants at the USAF School of Aerospace Medicine were Dr. H.F. Stegall; Dr. H.L. Stone; Dr. Vernon Bishop; Robert Taylor, Technical Sergeant, USAF; Mr. Merrill Kardon; and Virginia Alena, Major, USAF. Participants at Wilford Hall USAF Hospital were William Kemmerer, Lieutenant Colonel, USAF, MC; John Morgan, Captain, USAF, MC; Paul Cacchione, Staff Sergeant, USAF; and Betty Austin, Sergeant, USAF. Participants at the Veterans' Hospital, Southern Research Support Center, Little Rock, Arkansas, were Mr. Jack Johnson, and Dr. G.W. Molnar. Participants at the Can Tho Provincial Hospital in South Vietnam were William Kemmerer, Lieutenant Colonel, USAF, MC; and Kenneth Richardson, Captain, USAF, MC; on temporary duty from Wilford Hall USAF Hospital.

Volume I summarized the work done toward development and evaluation of an ultrasonic Doppler method for indirect measurement of arterial blood pressure in the aerospace environment. This volume covers the design characteristics and the operating instructions for the three measuring systems and the two-stage limiter.

This technical report has been reviewed and is approved.

ROBERT H. LANG
Lieutenant Colonel, USAF, MC
Chief, Biomedical Laboratory
Aerospace Medical Research Laboratories

ABSTRACT

Research was performed to develop and evaluate an ultrasonic Doppler method for indirect measurement of arterial blood pressure in the aerospace environment. The design characteristics and operating instructions for the three measuring systems and for the two-stage limiter are detailed in this report.

TABLE OF CONTENTS

		PAGE
APPENDIX I.	OPERATING INSTRUCTIONS FOR ULTRASONIC DOPPLER BLOOD PRESSURE MEASURING SYSTEM NO. 1	85
SECTION I.	INTRODUCTION	86
SECTION II.	DESCRIPTION OF SYSTEM NO. 1	87
SECTION III.	REQUIRED EQUIPMENT	92
SECTION IV.	OPERATING INSTRUCTIONS	93
SECTION V.	POWER PACK	95
APPENDIX II.	OPERATING INSTRUCTIONS FOR ULTRASONIC DOPPLER BLOOD PRESSURE MEASURING SYSTEM NO. 1AB	97
SECTION I.	INTRODUCTION	98
SECTION II.	DESCRIPTION OF SYSTEM NO. 1AB	99
SECTION III.	REQUIRED EQUIPMENT	107
SECTION IV.	OPERATING INSTRUCTIONS	108
SECTION V.	POWER PACK	111
APPENDIX III.	OPERATING INSTRUCTIONS FOR ULTRASONIC DOPPLER BLOOD PRESSURE MEASURING SYSTEM NO. 3	113
SECTION I.	INTRODUCTION	114
SECTION II.	DESCRIPTION OF SYSTEM NO. 3	115
SECTION III.	REQUIRED EQUIPMENT	122
SECTION IV.	OPERATING INSTRUCTIONS	123
SECTION V.	POWER PACK	125
APPENDIX IV.	OPERATING INSTRUCTIONS FOR TWO-STAGE LIMITER	127
SECTION I.	INTRODUCTION	128
SECTION II.	DESCRIPTION OF TWO-STAGE LIMITER	129
SECTION III.	REQUIRED EQUIPMENT	132
SECTION IV.	OPERATING INSTRUCTIONS	133

LIST OF ILLUSTRATIONS

FIGURE NO.		PAGE
46	Block Diagram - System No. 1.....	88
47	Circuit Diagram - Wide Band Radio Frequency Amplifier (Gain 30 Decibels, 1 to 10 Megahertz).	89
48	Circuit Diagram - Audio Amplifier (Gain 60 Decibels, 20 Hertz to 10 Kilohertz).....	90
49	Circuit Diagram, High Pass Filter and Power Supply	91
50	Ultrasonic Doppler System No. 1AB (Top View)...	100
51	Block Diagram - System No. 1AB.....	101
52	Circuit Diagram, Oscillator and Driver.....	102
53	Circuit Diagram, Radio Frequency Amplifier and Power Supply.....	103
54	Circuit Diagram - Audio Amplifier (Gain 60 Decibels, 20 Hertz to 10 Kilohertz).....	104
55	Circuit Diagram - Active Filter.....	105
56	Ultrasonic Doppler Blood Pressure Measuring System No. 1AB (Bottom View).....	110
57	Ultrasonic Doppler Blood Pressure Measuring System No. 3.....	116
58	Ultrasonic Doppler Blood Pressure Measuring System No. 3 (Back Panel).....	117
59	Interconnection Diagram, System No. 3.....	118

LIST OF ILLUSTRATIONS (Cont'd)

FIGURE NO.		PAGE
60	Circuit Diagram, Oscillator and Driver, System No. 3	119
61	Circuit Diagram, Receiver, System No. 3	120
62	Two-Stage Limiter	130
63	Circuit Diagram, Two-Stage Limiter	131

APPENDIX I

OPERATING INSTRUCTIONS

for

ULTRASONIC DOPPLER BLOOD PRESSURE MEASURING SYSTEM NO. 1

SECTION I

INTRODUCTION

Measurement of systolic and diastolic blood pressure on remote subjects, desirable in manned space flight programs, has been accomplished recently by automated versions of the auscultatory method of Korotkoff. This development has produced blood pressure information which, however, suffers from an inherent problem of sensitivity to high level airborne noise and subject motion artifact.

A method of detecting the motion of the arterial wall under an occlusive cuff, and thus defining arterial opening events versus cuff pressure, has been developed. A blood pressure measurement system based upon this method operates by flooding the arterial segment under the cuff with harmless ultrasound energy and then receiving and detecting the Doppler shifted component of the reflected energy. The transducer is centered under the pressure cuff over the desired arterial segment. When both the transducer and the arterial segment are motionless with respect to each other, the frequency of the reflected signal equals that of the transmitted signal. However, if the transducer and the reflecting arterial wall move with respect to each other, the reflected signal will be higher or lower in frequency, depending on direction of the relative motion. Frequency shift is proportional to the velocity of the relative motion and is commonly termed the "Doppler shift."

When the pressure cuff is inflated above systolic pressure, the walls of the occluded section of the artery remain stationary throughout the cardiac cycle. As cuff pressure is slowly reduced below the systolic pressure peak, the arterial walls under the cuff begin to undergo dynamic opening and closing motion as transmural pressure reverses with each heartbeat. As cuff pressure is further reduced, the dynamics of the arterial walls of the segment change as a result of interaction with the pulsating intra-arterial pressure, giving rise to a distinct change in the frequency spectrum of the derived Doppler signals at the diastolic point.

System No. 1 is sensitive exclusively to acoustical signals of high frequencies, typically 8 megahertz, which are well above the frequency of normal environmental noise and vibration. Noise and vibration will affect blood pressure measurements only if they are of sufficient magnitude to cause motion of the transducer, the reflecting arterial wall, or some other normally stationary target in the signal path. Normally, subject motion and vibrational interference produce low velocities compared to the dynamics of the arterial wall, and the effect of resulting low frequency Doppler signals can be significantly reduced by electronic filtering.

SECTION II

DESCRIPTION OF SYSTEM NO. 1

Specific Purpose:	To detect arterial wall motion coincident with arterial opening events for the purpose of identifying systolic and diastolic blood pressure points.
Physical Specifications:	Size--3 X 7 X 12 inches
	Weight--Approximately 5 pounds
	Power--Rechargeable batteries
	Connectors--Type BNC
Electrical Specifications: (See Figs. 46 through 49)	Frequency--1 to 10 megahertz, will accommodate a wide range of transducers
	Transducer Drive--2 volts rms, 50-ohm source (an external signal generator such as the HP 651A must be provided)
	Audio Response--25 hertz to 10 kilohertz
	Audio Filtering--25 to 1600 hertz, high pass, 6 decibels per octave
	Battery Life--8 hours, continuous operation.
Transducer:	Various piezoelectric ceramics of lead zirconate--lead titanate composition in various configurations.
Other Applications:	Transcutaneous acquisition of blood flow signals from superficial arteries and veins. Acquisition of blood pressure from various anatomical sites.
Special Features:	(1) Wideband Capability--Wideband mixer and wideband amplifiers are used.
	(2) Split Disc Transducers--Feedthrough of exciting signal is minimized which effectively increases dynamic range.
	(3) Balanced Mixer--Efficient detection is achieved over a very broad band.

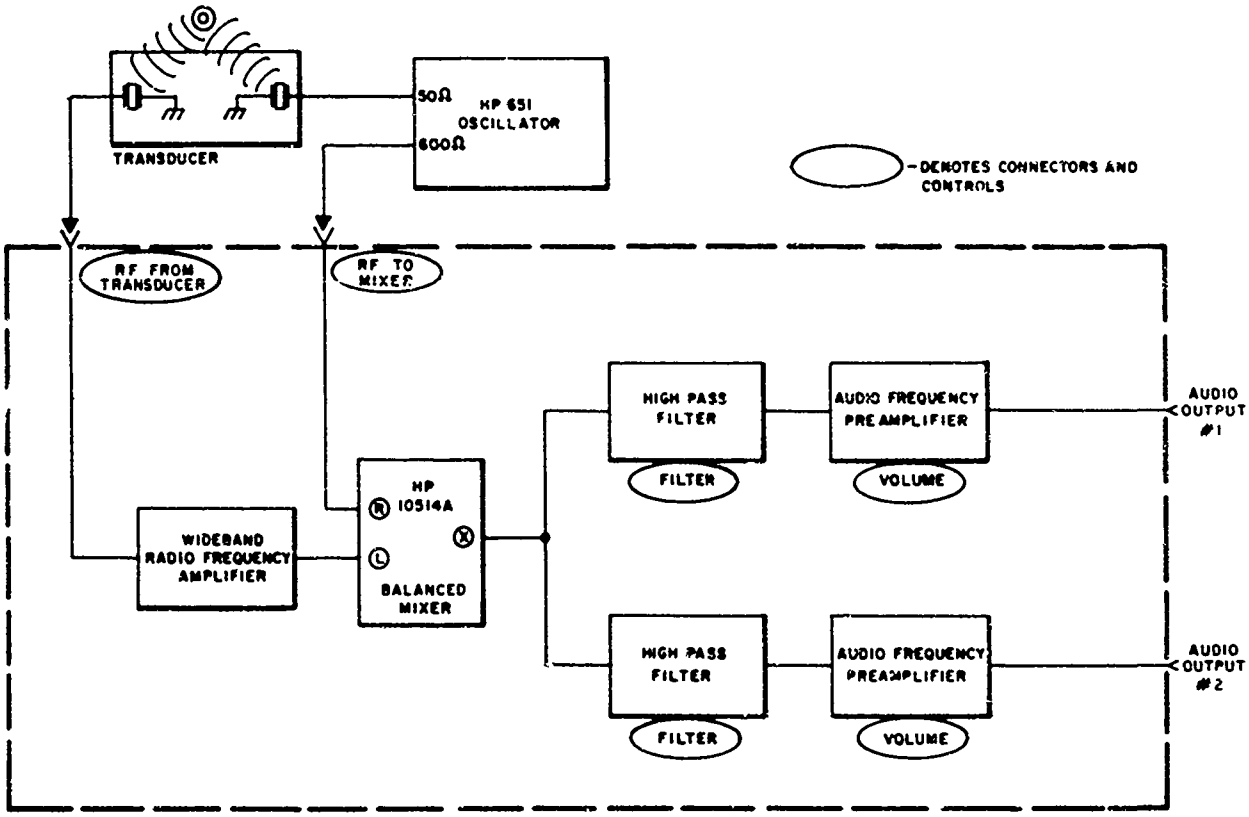

FIGURE 46. BLOCK DIAGRAM - SYSTEM NO. 1

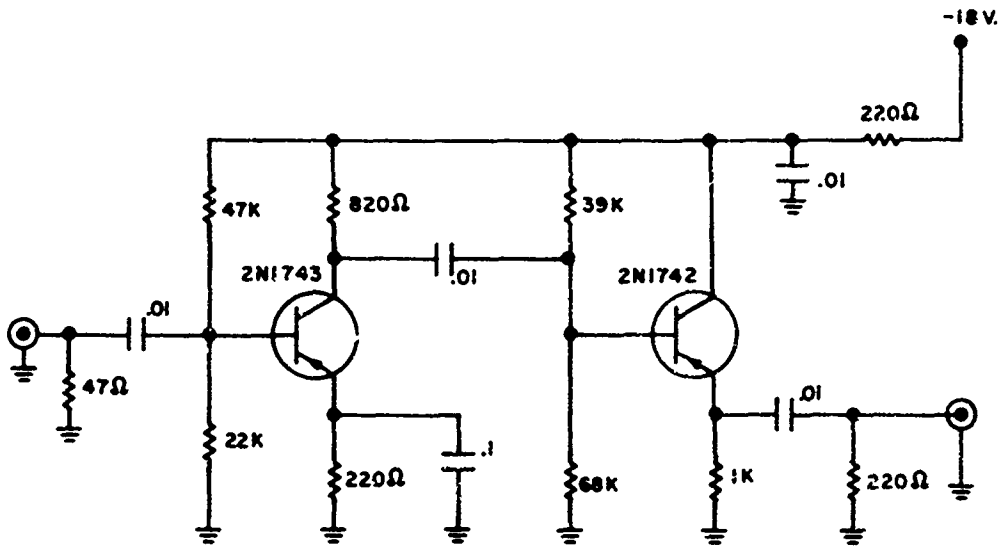

FIGURE 47. CIRCUIT DIAGRAM-WIDE BAND RADIO-FREQUENCY AMPLIFIER (GAIN 30 DECIBEL, 1 TO 10 MEGAHERTZ)

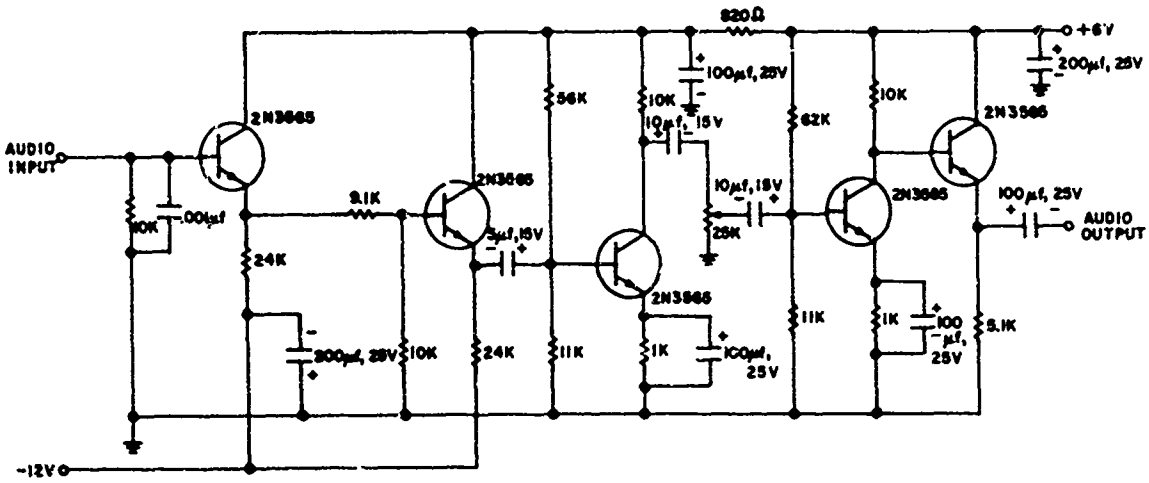

Circuit after Donald W. Baker, University of Washington[27]

FIGURE 48. CIRCUIT DIAGRAM - AUDIO AMPLIFIER (GAIN 60 DECIBEL, 20 HERTZ TO 10 KILOHERTZ)

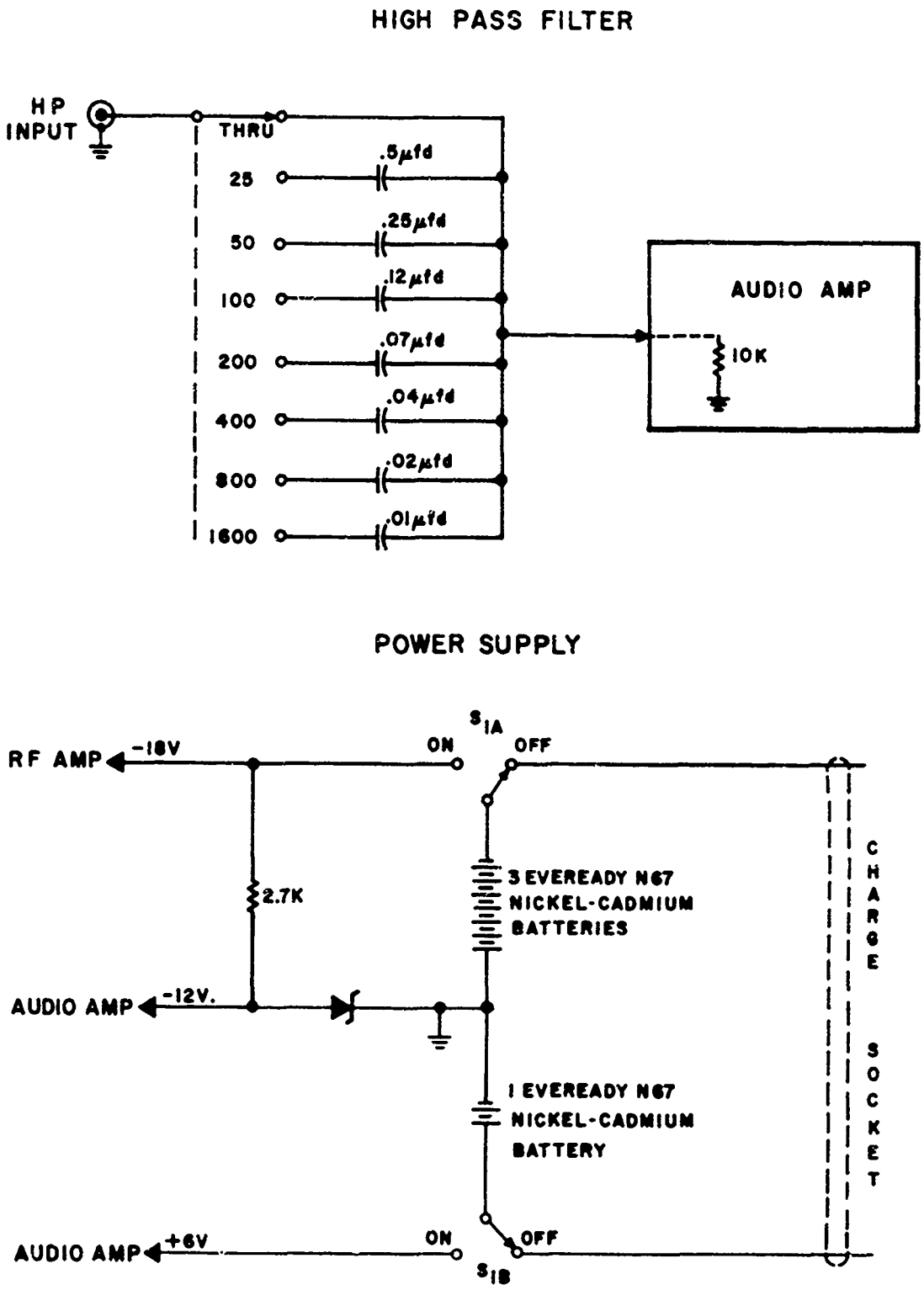

FIGURE 49. CIRCUIT DIAGRAM, HIGH PASS FILTER AND POWER SUPPLY

SECTION III

REQUIRED EQUIPMENT

The following equipment is required to operate System No. 1:

(1) Radio frequency signal source equivalent to the Hewlett-Packard HP 651A;

(2) Audio amplifier and speaker or headphone; a recorder with response from 50 to 1500 hertz or a direct writing recorder with envelope detector, i.e., Offner Dynograph with Type 9822 Log Audio Coupler;

(3) A 90-milliampere constant current battery charging source with electrically isolated output;

(4) Pressure cuff (modified);

(5) Ultrasonic coupling jelly (Aquasonic 100, a product of Parker Laboratories), or equivalent.

SECTION IV

OPERATING INSTRUCTIONS

The batteries should first be charged in accordance with the instructions in Section V of this appendix.

(1) Connect a coaxial cable from the 600-ohm output of the Hewlett-Packard HP 651A oscillator to the terminal marked "RF to mixer." See Figure 1.

(2) Connect the transducer with one connector to the 50-ohm terminal of the HP oscillator and the other to the terminal labeled "RF from transducer."

(3) Connect an audio sound system to the terminals marked "Audio Output #1" and turn on the system. A recorder may be connected to "Audio Output #2."

(4) Turn on the HP oscillator, set the level to approximately 2 volts rms and tune to approximately 8 megahertz. Experience gained in operating the system will help determine the exact frequency and voltage level. The mixer will have about 0.6 volt rms to its input from the 600-ohm output of the HP oscillator when there is approximately 2 volts rms to the transducer from the 50-ohm output.

(5) Place ultrasonic coupling jelly on the transducer; this action should produce a raucous audio response. Further confidence check can be made by listening to blood flow signals. These can be detected by placing the transducer, which can easily be separated from the cuff, over an artery or vein near the surface of the skin such as in the antecubital fossa.

(6) Blood pressure is measured as follows:

(a) Place the Velcro backed transducer on the matching Velcro patch of the modified cuff so that the proximal edge of the active part of the transducer contacts the cuff centerline. See Figure 12.

(b) Place the transducer directly over the brachial artery.

(c) Inflate the cuff and observe the arterial opening events, aurally or graphically, while slowly venting cuff pressure. Systolic pressure will approximate the cuff pressure that is measured coincident with the first Doppler component

signals observed as cuff pressure decreases. Diastolic pressure will be indicated by a marked change in the frequency spectrum and in the amplitude of the Doppler component signals.

(d) Adjust the high pass filter to minimize signals which may persist when cuff pressure is below diastolic pressure. These lower frequency signals are caused by arterial wall motion which occurs under usual physiological conditions. Subject motion artifact will also be significantly reduced by rejecting output signals below about 100 hertz in frequency. The use of an auxiliary filter, such as an SKL Model 302, will improve system performance.

SECTION V

POWER PACK

Nickel-cadmium battery packs provide rechargeable, high energy density, portable power sources for electronic equipment. The life of these batteries is excellent if certain precautions are observed in charging and use.

1. Charge

This 24-volt battery pack can be charged by placing the power switch in the "charge" position and charging for 14 hours from a DC 90-milliampere constant current source. This can be accomplished with a standard isolated DC power supply with a voltage setting of 30 volts or higher and with current limiting set at 90 milliamperes. Under no conditions should the batteries be left on charge for more than 14 hours.

2. Use

These batteries should never be allowed to completely discharge. A voltage below 20 volts across the charging terminals with the switch in the "charge" position indicates a definite need for charging. The system will need recharging after approximately 10 hours of use.

NOTICES

When US Government drawings, specifications, or other data are used for any purpose other than a definitely related Government procurement operation, the Government thereby incurs no responsibility nor any obligation whatsoever, and the fact that the Government may have formulated, furnished, or in any way supplied the said drawings, specifications, or other data, is not to be regarded by implication or otherwise, as in any manner licensing the holder or any other person or corporation, or conveying any rights or permission to manufacture, use, or sell any patented invention that may in any way be related thereto.

Federal Government agencies and their contractors registered with Defense Documentation Center (DDC) should direct requests for copies of this report to:

DDC
Cameron Station
Alexandria, Virginia 22314

Non-DDC users may purchase copies of this report from:

Chief, Storage and Dissemination Section
Clearinghouse for Federal Scientific & Technical Information (CFSTI)
Sills Building
5285 Port Royal Road
Springfield, Virginia 22151

Organizations and individuals receiving reports via the Aerospace Medical Research Laboratories' automatic mailing lists should submit the addressograph plate stamp on the report envelope or refer to the code number when corresponding about change of address or cancellation.

Do not return this copy. Retain or destroy.

ACCESSION for
CFSTI WHITE SECTION
DDC BUFF SECTION
UNANNOUNCED
JUSTIFICATION
BY
DISTRIBUTION/AVAILABILITY CODES
DIST. AVAIL. and/or SPECIAL
1

100 - November 1968 - CO455 - 55-1239

APPENDIX II

OPERATING INSTRUCTIONS

for

ULTRASONIC DOPPLER BLOOD PRESSURE MEASURING SYSTEM NO. 1AB

SECTION I

INTRODUCTION

Measurement of systolic and diastolic blood pressure on remote subjects, desirable in manned space flight programs, has been accomplished recently by automated versions of the auscultatory method of Korotkoff. This development has produced blood pressure information which, however, suffers from an inherent problem of sensitivity to high level airborne noise and subject motion artifact.

A method of detecting the motion of the arterial wall under an occlusive cuff, and thus defining arterial opening events versus cuff pressure, has been developed. A blood pressure measurement system based upon this method operates by flooding the arterial segment under the cuff with harmless ultrasound energy and then receiving and detecting the Doppler shifted component of the reflected energy. The transducer is centered under the pressure cuff over the desired arterial segment. When both the transducer and the arterial segment are motionless with respect to each other, the frequency of the reflected signal equals that of the transmitted signal. However, if the transducer and the reflecting arterial wall move with respect to each other, the reflected signal will be higher or lower in frequency depending on direction of the relative motion. Frequency shift is proportional to the velocity of the relative motion and is commonly termed the "Doppler shift."

When the pressure cuff is inflated above systolic pressure, the walls of the occluded section of the artery remain stationary throughout the cardiac cycle. As cuff pressure is slowly reduced below the systolic pressure peak, the arterial walls under the cuff begin to undergo dynamic opening and closing motion as transmural pressure reverses with each heartbeat. As cuff pressure is further reduced, the dynamics of the arterial walls of the segment change as a result of interaction with the pulsating intra-arterial pressure, giving rise to a distinct change in the frequency spectrum of the derived Doppler signals at the diastolic point.

System No. 1AB is sensitive exclusively to acoustical signals at high frequencies, typically 8 megahertz, which are well above the frequency of normal environmental noise and vibration. Noise and vibration will affect blood pressure measurements only if they are of sufficient magnitude to cause motion of the transducer, the reflecting arterial wall, or some other normally stationary target in the signal path. Normally, subject motion and vibrational interference produce low velocities compared to the dynamics of the arterial wall, and the effect of resulting low frequency Doppler signals can be significantly reduced by electronic filtering.

SECTION II

DESCRIPTION OF SYSTEM NO. 1AB

Specific Purpose:	To detect arterial wall motion coincident with arterial opening events for the purpose of identifying systolic and diastolic blood pressure points.
Physical Specifications: (See Fig. 50)	Size--3 × 7 × 12 inches Weight--Approximately 6 pounds Power--Rechargeable batteries Connectors--Type BNC.
Electrical Specifications: (See Block and Circuit Diagrams, Figs. 51 through 55)	Frequency--8 ± 1 megahertz adjusted to transducer resonant frequency Transducer Drive--2 volts rms into the 50-ohm cable connecting the transducer Audio Response--25 hertz to 10 kilohertz Audio Filtering--25 to 1600 hertz, variable band pass, 18 decibels per octave Battery Life--8 hours, continuous operation.
Transducer:	Material--Piezoelectric ceramic disc, Clevite PZT-5 Configuration--Flat, 3/4-inch Disc, split, shielded, with Dage connectors and 36-inch coax leads Frequency--Approximately 8 megahertz.
Other Applications:	Transcutaneous acquisition of blood flow signals from superficial arteries and veins. Acquisition of blood pressure from various anatomical sites.
Special Features:	(1) Wideband Capability--Wideband mixer and wideband amplifiers are used. (2) Split Disc Transducers--Feedthrough of exciting signal is minimized which effectively increases dynamic range.

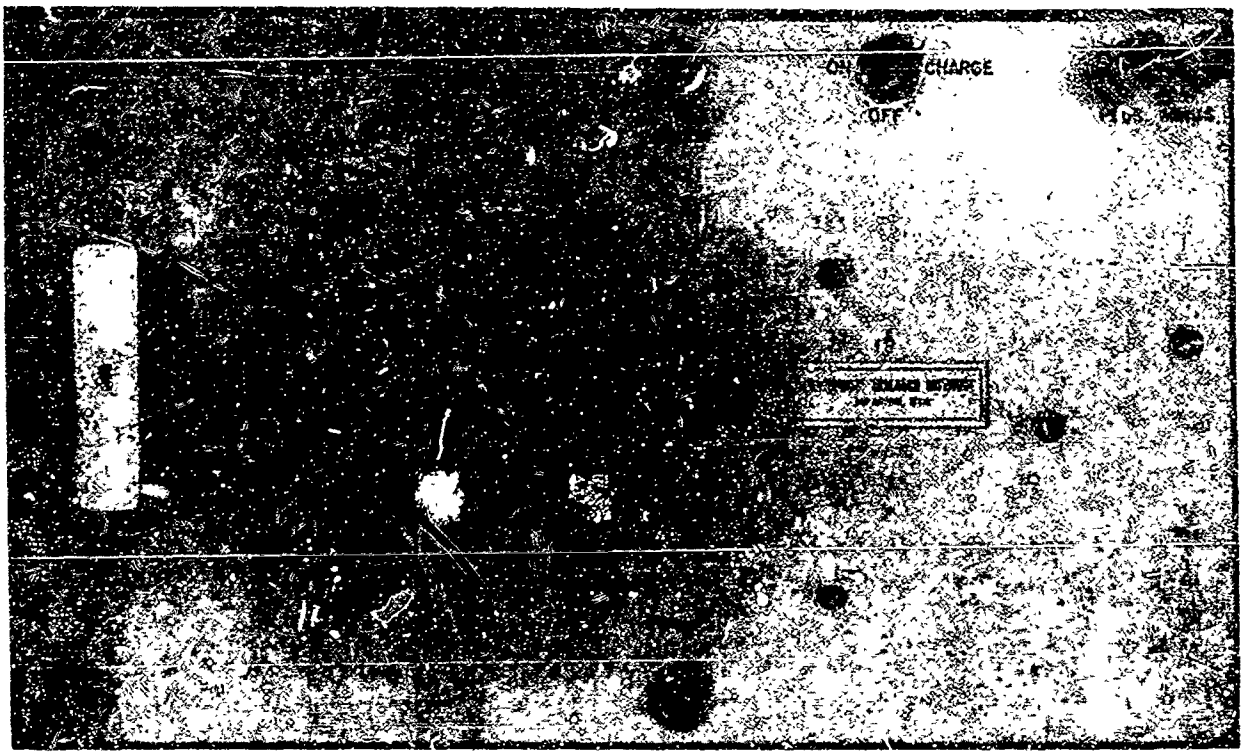

FIGURE 50. ULTRASONIC DOPPLER SYSTEM NO. 1AB
(TOP VIEW)

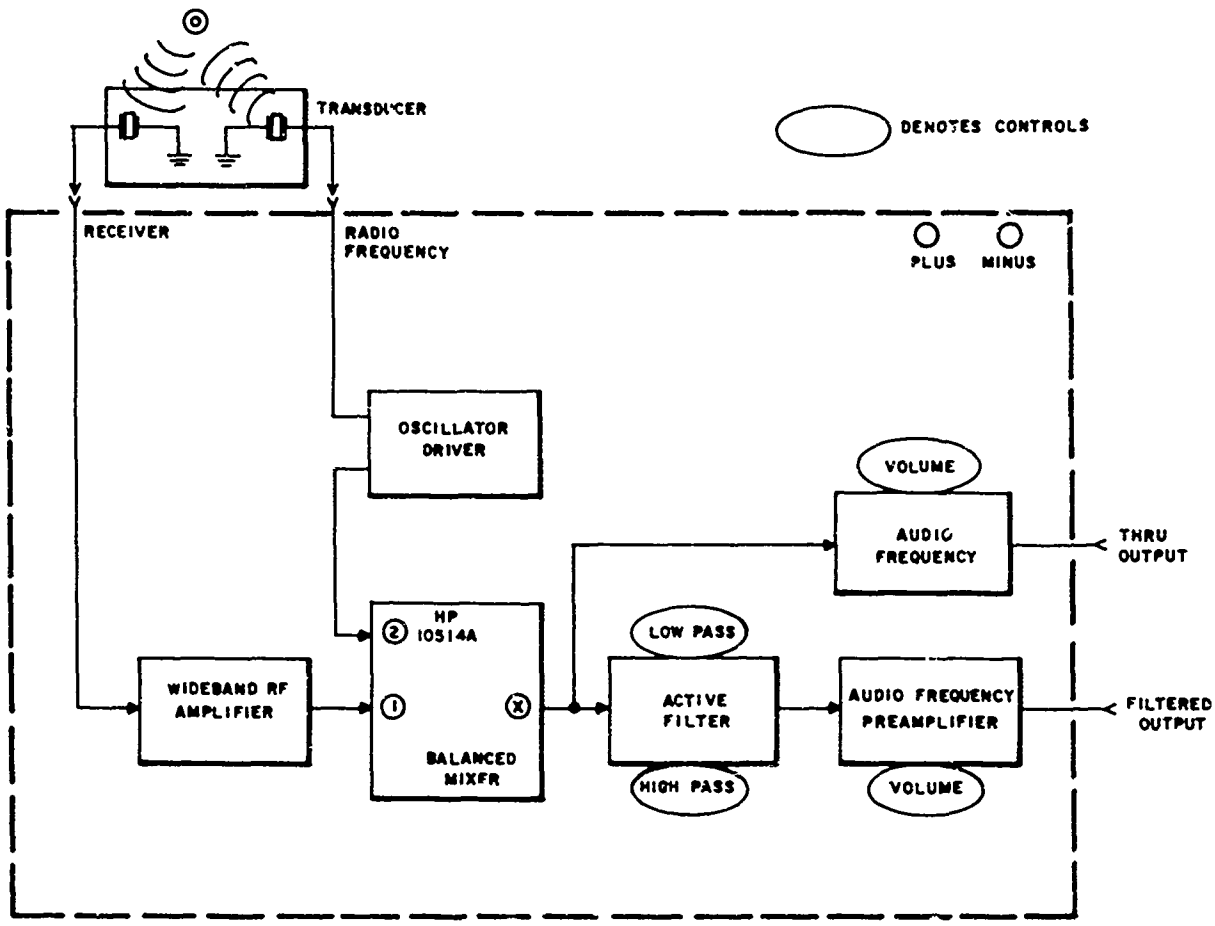

FIGURE 51. BLOCK DIAGRAM - SYSTEM NO. 1AB

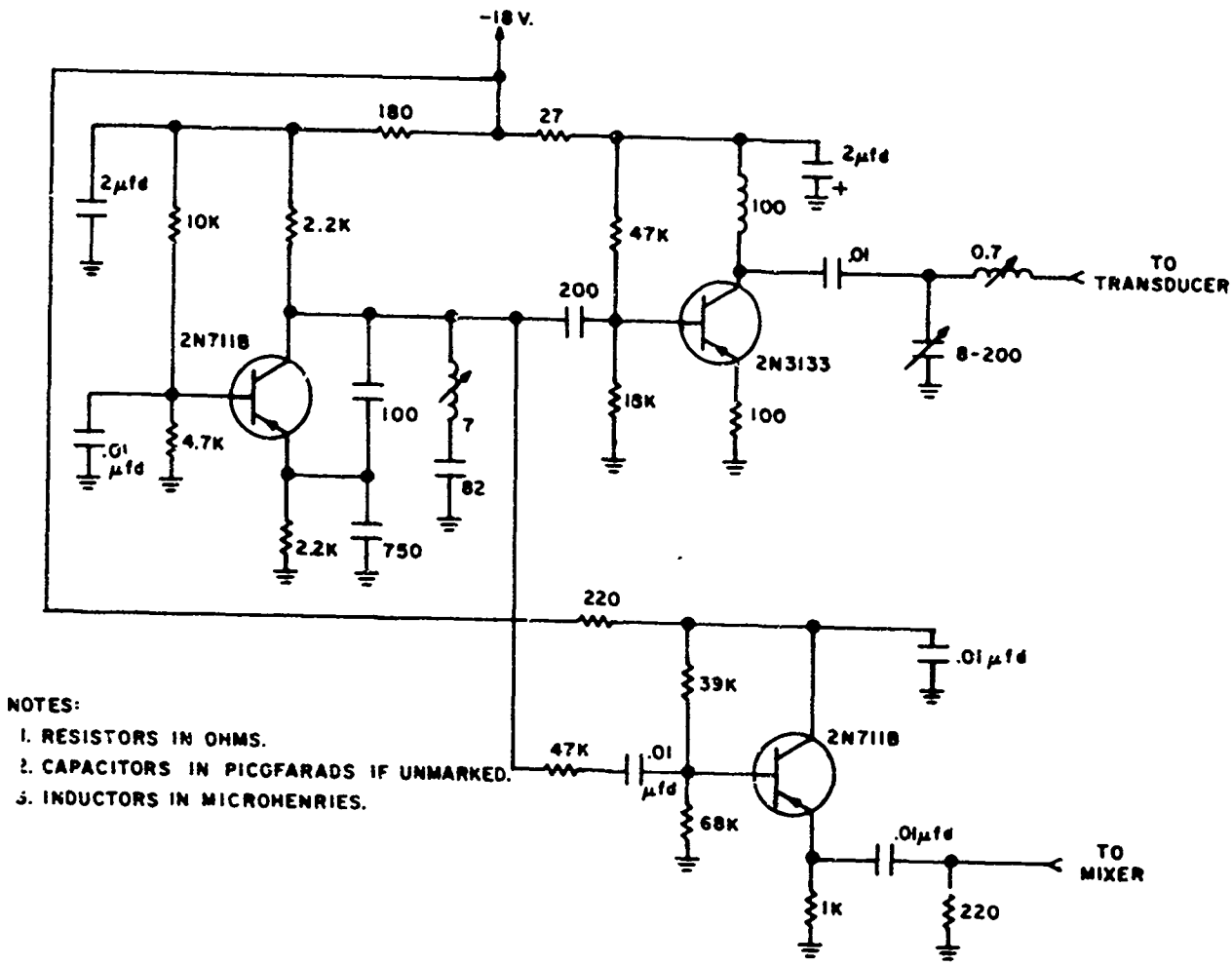

FIGURE 52. CIRCUIT DIAGRAM, OSCILLATOR AND DRIVER

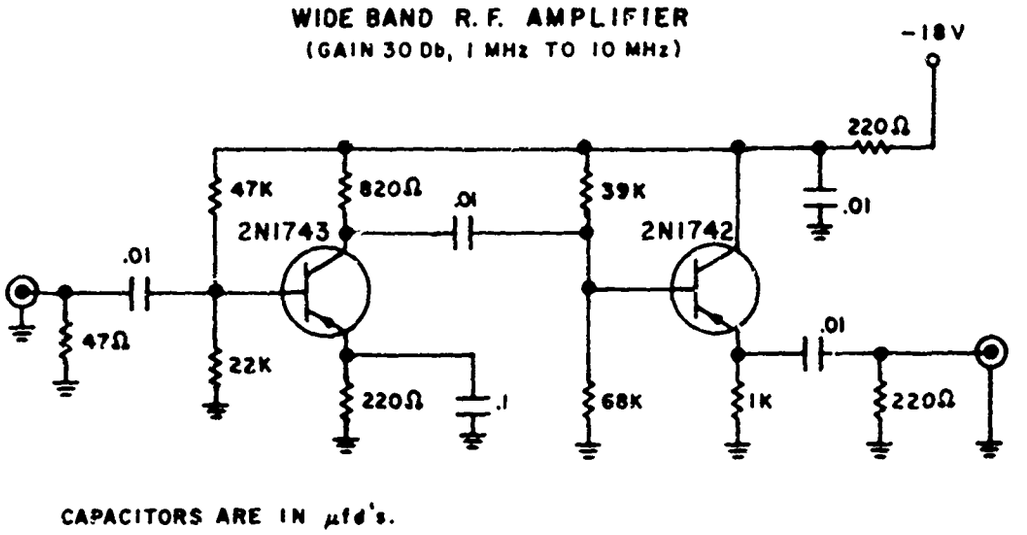

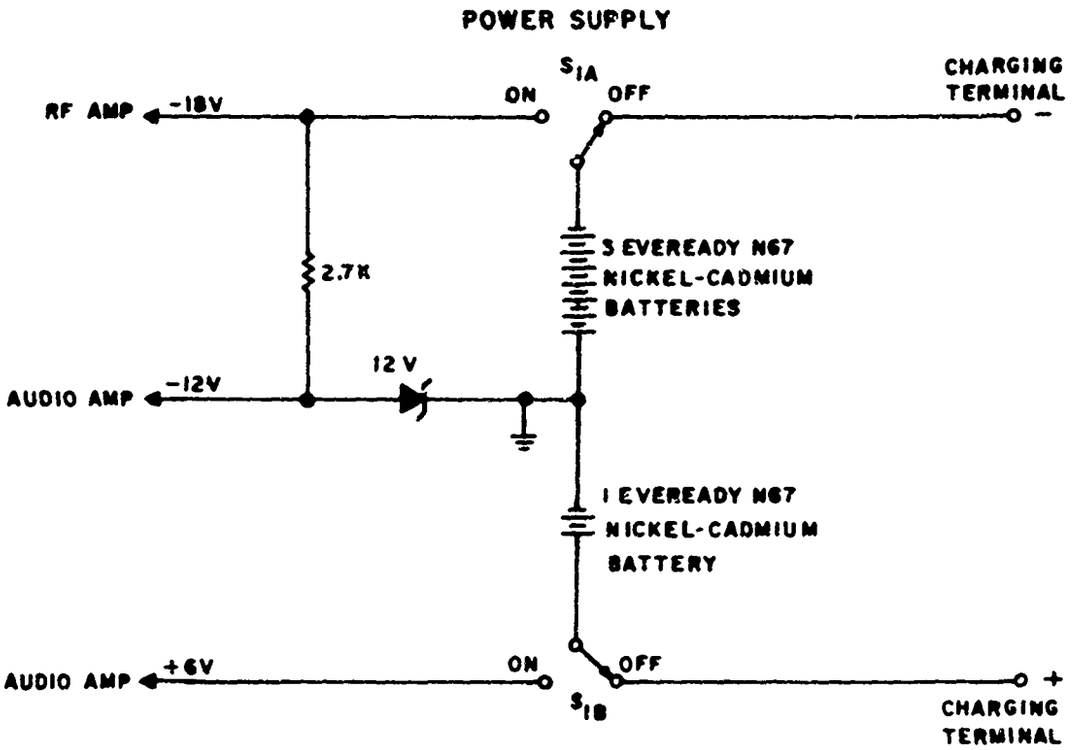

FIGURE 53. CIRCUIT DIAGRAM, RADIO-FREQUENCY AMPLIFIER AND POWER SUPPLY

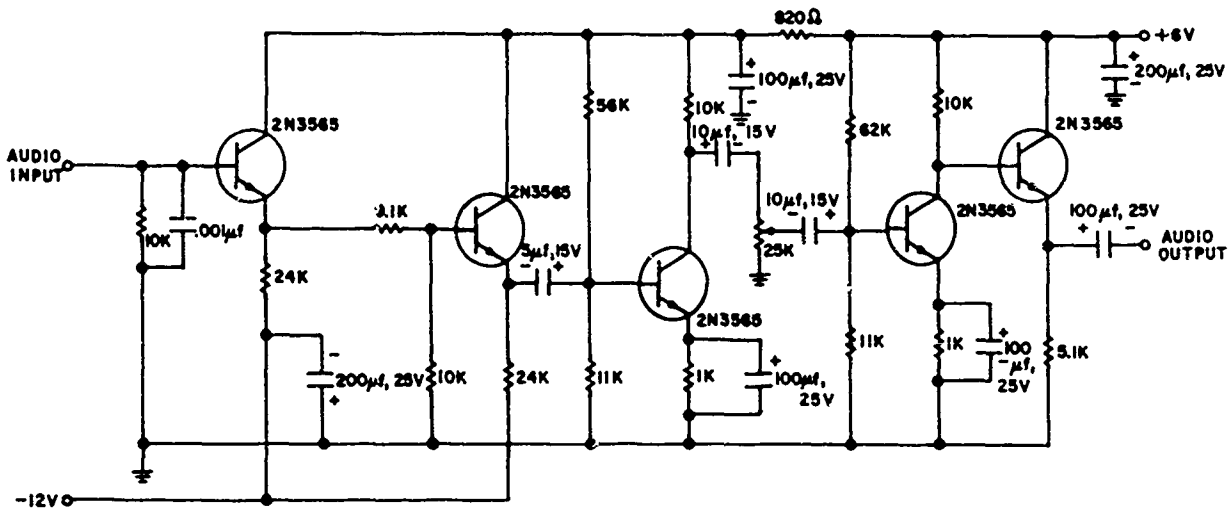

FIGURE 54. CIRCUIT DIAGRAM - AUDIO AMPLIFIER
(GAIN 60 DECIBEL, 20 HERTZ TO 10 KILOHERTZ)

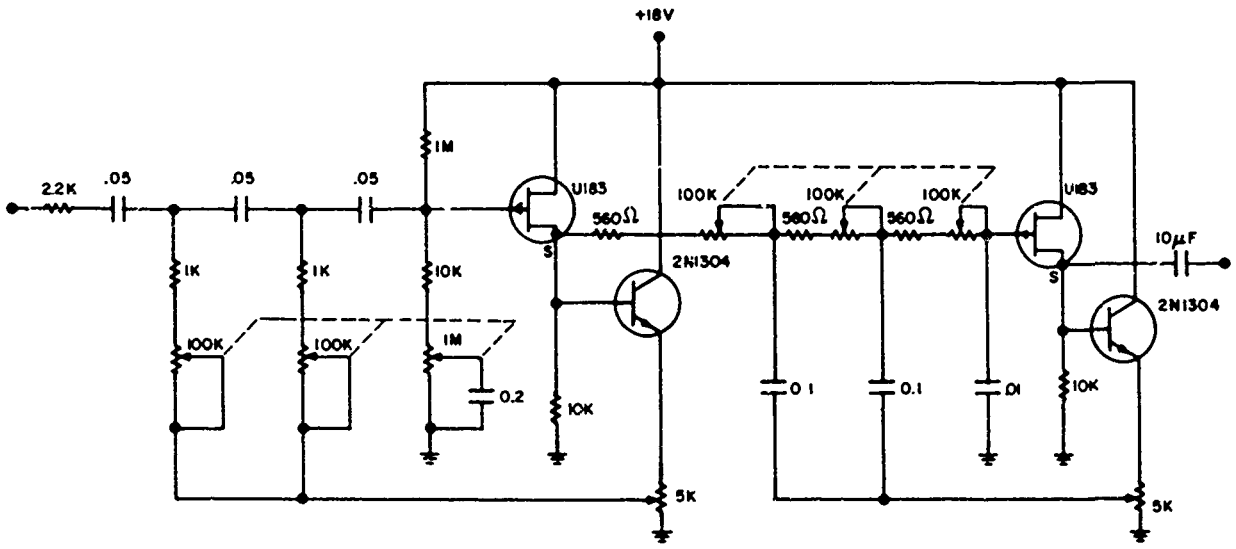

FIGURE 55. CIRCUIT DIAGRAM - ACTIVE FILTER

(3) Balanced Mixer--Efficient detection is achieved over a very broad band.

(4) Adjustable Bandpass Filter--Subject motion and vibration artifact can be reduced significantly. Narrow bands can be selected for reception and observation.

SECTION III

REQUIRED EQUIPMENT

The following equipment is required to operate System No. 1AB:

(1) Audio amplifier and speaker or headphone; a recorder with response from 50 to 1500 hertz or a direct writing recorder with envelope detector, i.e., Offner Dynograph with Type 9822 Log Audio Coupler;

(2) A 90-milliampere constant current battery charging source with electrically isolated output;

(3) Pressure cuff (modified);

(4) Ultrasonic coupling jelly (Aquasonic 100, a product of Parker Laboratories), or equivalent.

SECTION IV

OPERATING INSTRUCTIONS

1. System Operation

The batteries should first be charged in accordance with instructions in Section V of this appendix.

(1) Connect one lead of the transducer to the RF connector and the other to the RCVR connector of the system; see Figure 50.

(2) Connect an audio sound system or chart recorder to the terminals marked "FILTERED OUTPUT" and turn on the system.

(3) Place ultrasonic coupling jelly on the transducer; this action should produce a raucous audio response. Further confidence check can be made by listening to blood flow signals. These can be detected by placing the transducer, which can easily be separated from the cuff, over an artery or vein near the surface of the skin such as in the antecubital fossa.

(4) Blood pressure is measured as follows:

(a) Place the Velcro backed transducer on the matching Velcro patch of the modified cuff so that the proximal edge of the transducer contacts the cuff centerline. See Figure 12.

(b) Place the transducer directly over the brachial artery.

(c) Inflate the cuff and observe the arterial opening events, aurally or graphically, while slowly venting cuff pressure. Systolic pressure will approximate the cuff pressure that is measured coincident with the first Doppler component signals observed as cuff pressure decreases. Diastolic pressure will be indicated by a marked change in the frequency spectrum and in the amplitude of the Doppler component signals.

(d) Adjust the high pass filter (see Fig. 50) to minimize signals which may persist when cuff pressure is below diastolic pressure. These lower frequency signals are caused by arterial wall motion which occurs under usual physiological conditions. Subject motion artifact will also be significantly reduced by rejecting output signals below about 100 hertz in frequency. The low pass filter can be adjusted to minimize higher frequency interference which may be present. This control is usually set at about 800 hertz, although the operator should adjust both filter controls for best system performance.

2. Oscillator-Driver Tuning Procedure

It will be necessary to tune the frequency and the matching network of the oscillator-driver any time that another transducer is substituted for the one initially supplied. This unit will require only occasional adjustment otherwise. Need for tuning will be indicated by reduction of system sensitivity. All adjustments can be made with a standard 1/8-inch wide flat blade screwdriver. Refer to Figures 52 and 56.

Oscillator frequency must be adjusted to match the best operating resonance of the transducer. The resonant frequency of each transducer will be specified. Adjustment procedure is as follows:

(1) Connect the system for normal operation, and turn it on.

(2) Connect the high impedance probe of a counter or oscilloscope to the RF terminal of the system via a BNC tee.

(3) Adjust the control labeled FREQUENCY ADJUST in Figure 56 until the specified frequency is obtained. Clockwise motion decreases frequency; tuning range is from 7 to 9 megahertz.

An alternate tuning method which requires no test equipment is available. Simply monitor arterial blood flow signals with the system and adjust the FREQUENCY CONTROL for optimum audio response.

The transducer matching network is adjusted to give maximum voltage drive to the transducer. The adjustable portion of this network consists of a variable capacitor and a variable inductor which are labeled "C" and "L" in Figure 56. Make these adjustments as follows:

(1) Connect the system for normal operation, and turn it on.

(2) Connect the high impedance probe of an oscilloscope or an RF voltmeter to the RF terminal via a BNC tee.

(3) Adjust "C" for maximum output voltage.

(4) Adjust "L" for maximum output voltage.

(5) Repeat (3) and (4).

An alternate tuning method which requires no test equipment is available. Simply monitor arterial blood flow signals with the system, and adjust "C" and "L" for optimum audio response.

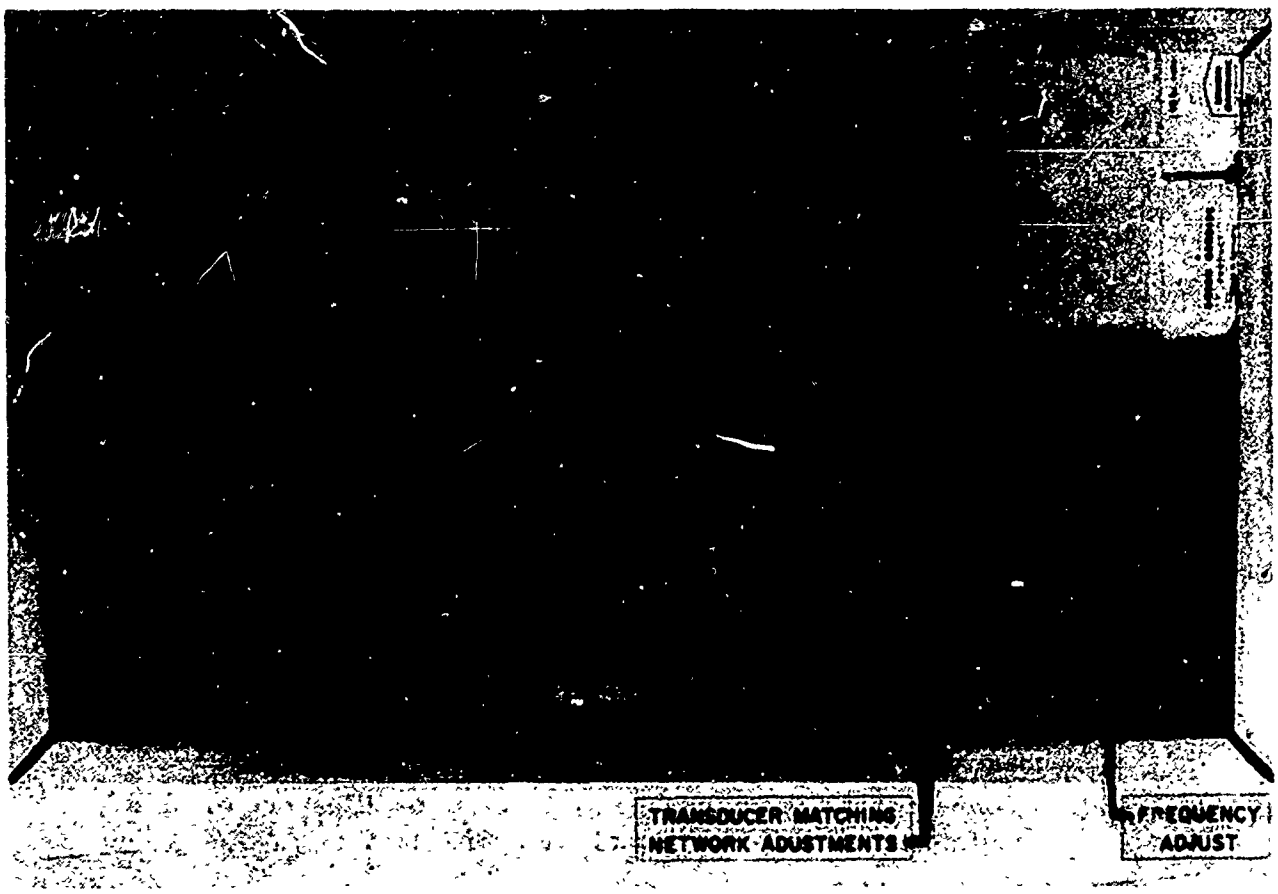

FIGURE 56. ULTRASONIC DOPPLER BLOOD PRESSURE MEASURING SYSTEM NO. 1AB (BOTTOM VIEW)

SECTION V

POWER PACK

Nickel-cadmium battery packs provide rechargeable, high energy density, portable power sources for electronic equipment. The life of these batteries is excellent if certain precautions are observed in charging and use.

1. Charge

This 24-volt battery pack can be charged by placing the power switch in the "charge" position and charging for 14 hours from a DC 90-milliampere constant current source. This can be accomplished with a standard isolated DC power supply with a voltage setting of 30 volts or higher and with current limiting set at 90 milliamperes. Under no conditions should the batteries be left on charge for more than 14 hours.

2. Use

These batteries should never be allowed to completely discharge. A voltage below 20 volts across the charging terminals with the switch in the "charge" position indicates a definite need for charging. The system will need recharging after approximately 10 hours of use.

APPENDIX III

OPERATING INSTRUCTIONS

for

ULTRASONIC DOPPLER BLOOD PRESSURE MEASURING SYSTEM NO. 3

SECTION I

INTRODUCTION

Measurement of systolic and diastolic blood pressure on remote subjects, desirable in manned space flight programs, has been accomplished recently by automated versions of the auscultatory method of Korotkoff. This development has produced blood pressure information which, however, suffers from an inherent problem of sensitivity to high level airborne noise and subject motion artifact.

A method of detecting the motion of the arterial wall under an occlusive cuff, and thus defining arterial opening events versus cuff pressure, has been developed. A blood pressure measurement system based upon this method operates by flooding the arterial segment under the cuff with harmless ultrasound energy and then receiving and detecting the Doppler shifted component of the reflected energy. The transducer is centered under the pressure cuff over the desired arterial segment. When both the transducer and the arterial segment are motionless with respect to each other, the frequency of the reflected signal equals that of the transmitted signal. However, if the transducer and the reflecting arterial wall move with respect to each other, the reflected signal will be higher or lower in frequency, depending on direction of the relative motion. Frequency shift is proportional to the velocity of the relative motion and is commonly termed the "Doppler shift."

When the pressure cuff is inflated above systolic pressure, the walls of the occluded section of the artery remain stationary throughout the cardiac cycle. As cuff pressure is slowly reduced below the systolic pressure peak, the arterial walls under the cuff begin to undergo dynamic opening and closing motion as transmural pressure reverses with each heartbeat. As cuff pressure is further reduced, the dynamics of the arterial walls of the segment change as a result of interaction with the pulsating intra-arterial pressure, giving rise to a distinct change in the frequency spectrum of the derived Doppler signals at the diastolic point.

System No. 3 is sensitive exclusively to acoustical signals of high frequencies, typically 8 megahertz, which are well above the frequency of normal environmental noise and vibration. Noise and vibration will affect blood pressure measurements only if they are of sufficient magnitude to cause motion of the transducer, the reflecting arterial wall, or some other normally stationary target in the signal path. Normally, subject motion and vibrational interference produce low velocities compared to the dynamics of the arterial wall, and the effect of resulting low frequency Doppler signals can be significantly reduced by electronic filtering.

SECTION II

DESCRIPTION OF SYSTEM NO. 3

Specific Purpose:	To detect arterial wall motion coincident with arterial opening events for the purpose of identifying systolic and diastolic blood pressure values.
Physical Specifications: (See Figs. 57 and 58)	Size--7-1/4 × 5-3/4 × 4-1/2 inches
	Weight--Approximately 2.25 pounds
	Power--Rechargeable nickel-cadmium batteries
	Connectors--RF through Dage bulkhead fittings
	AF through phone jacks
	AC charging line through Amphenol 126-191 miniature hexagon connector.
Electrical Specifications: (See Interconnection and Circuit Diagrams, Figs. 59 through 61)	Frequency--8 ± 1 megahertz adjusted to transducer resonant frequency
	Transducer Drive--1.5 volts rms into the 50-ohm cable connecting the transducer
	Audio Response--"LOW" cutoff, 240 to 400 hertz
	"HIGH" cutoff, 500 to 1100 hertz
	Audio Filtering--Switch selected, 8-decibel per octave slope
	Battery Life--5 hours, continuous operation.
Transducer:	Material--Piezoelectric ceramic discs Clevite PZT-5
	Configuration--Flat 3/4-inch disc, split, shielded with Dage connectors and 36-inch coax leads
	Frequency--Approximately 8 megahertz.
Other Applications:	Transcutaneous acquisition of blood flow signal from superficial arteries and veins. Acquisition

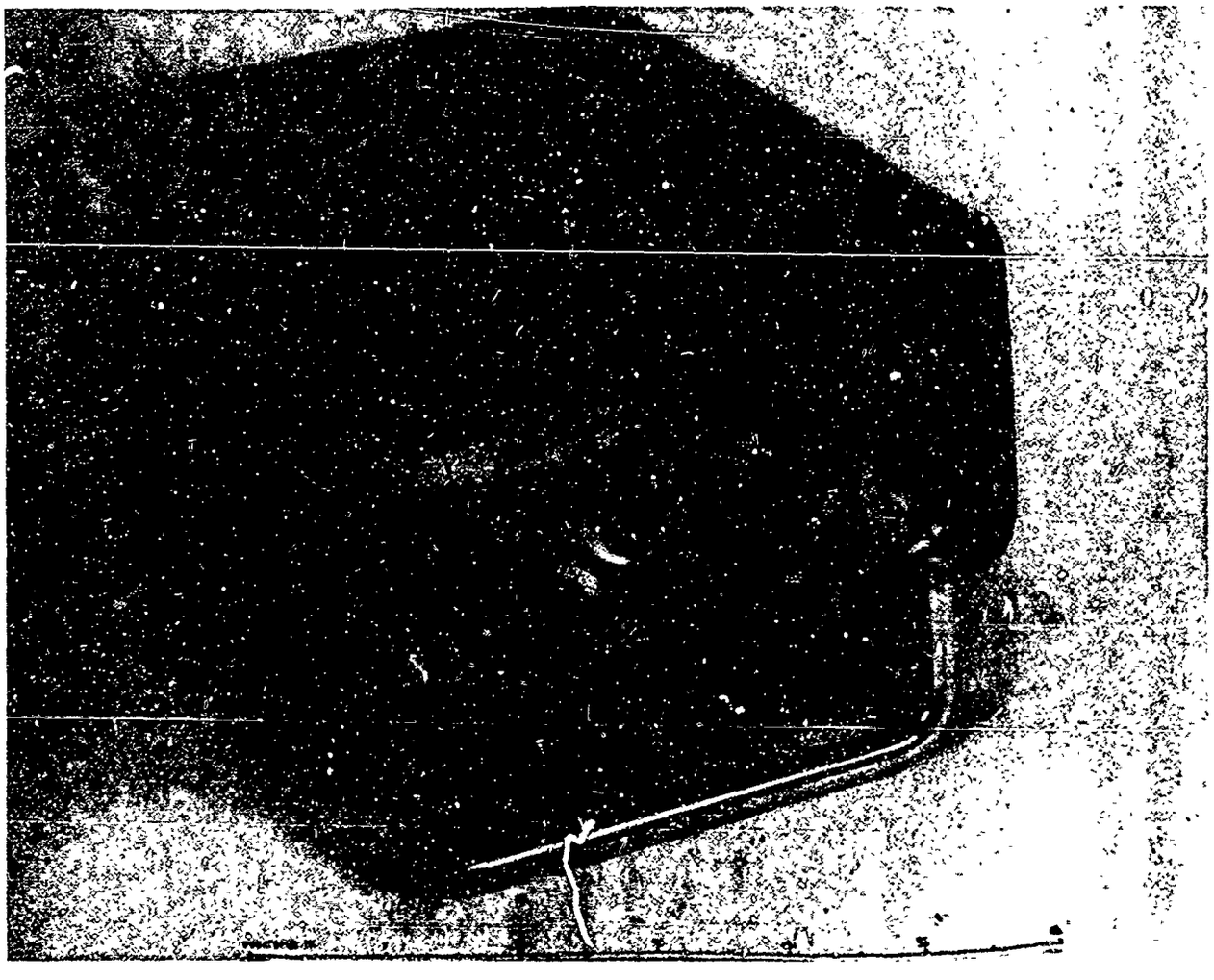

FIGURE 57. ULTRASONIC DOPPLER BLOOD PRESSURE MEASURING SYSTEM NO. 3

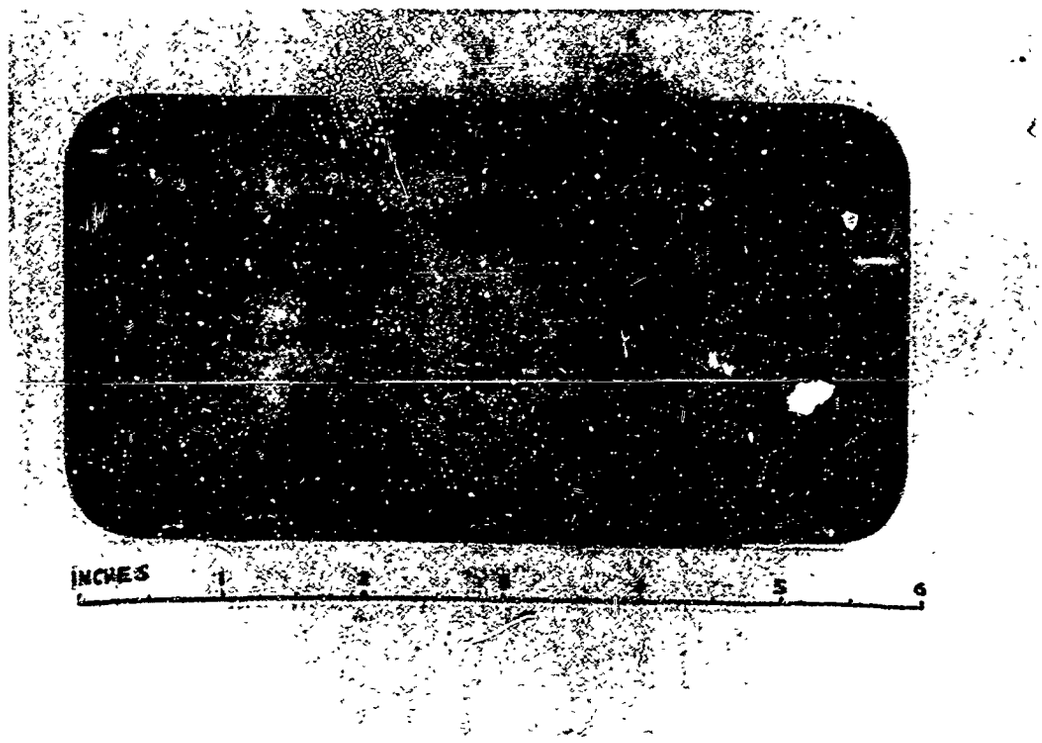

FIGURE 58. ULTRASONIC DOPPLER BLOOD PRESSURE MEASURING SYSTEM NO. 3 (BACK PANEL)

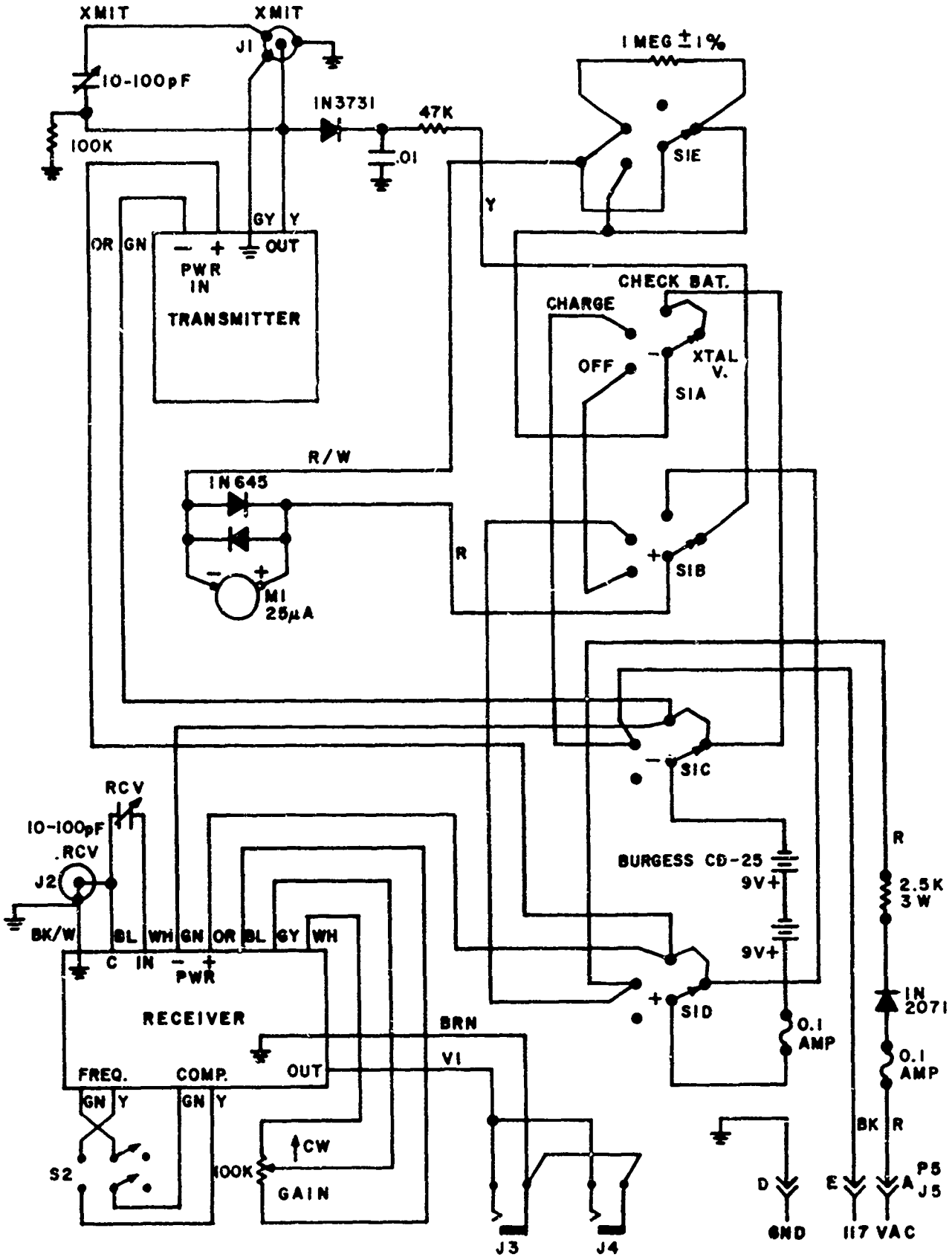

FIGURE 59. INTERCONNECTION DIAGRAM
SYSTEM NO. 3

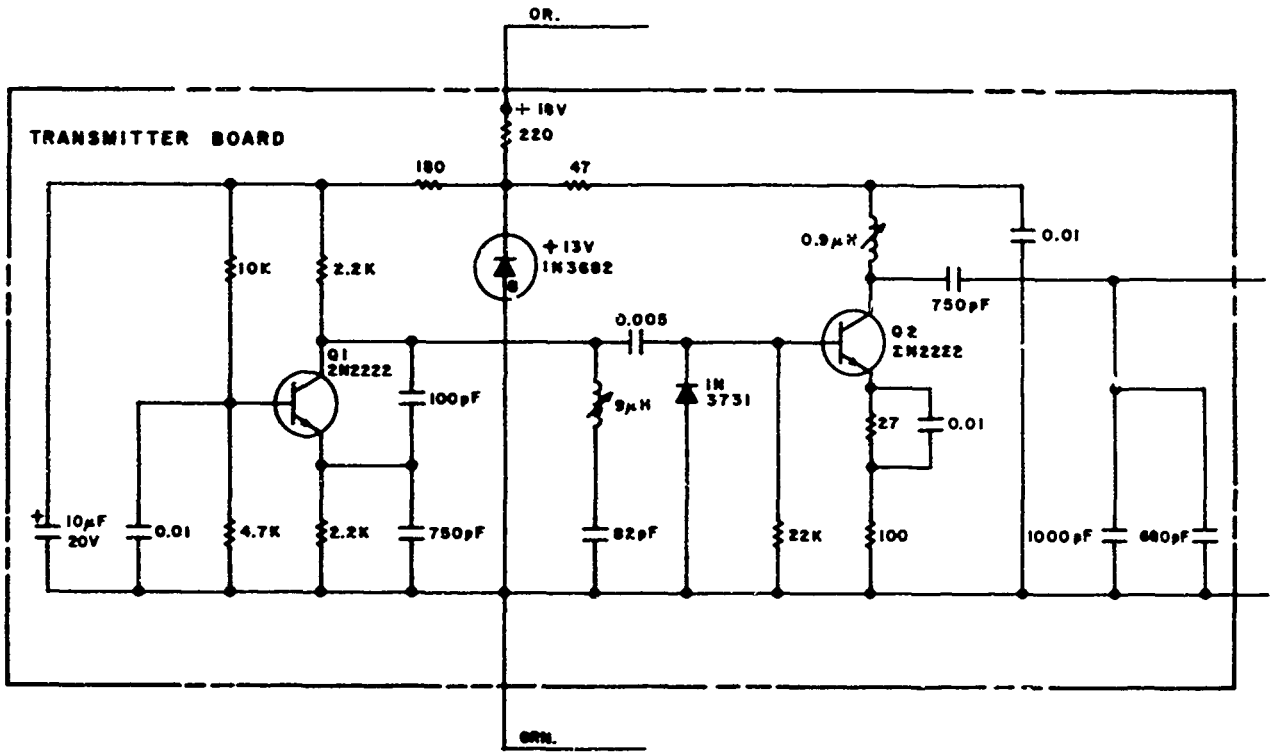

FIGURE 60. CIRCUIT DIAGRAMS, OSCILLATOR AND DRIVER, SYSTEM No. 3

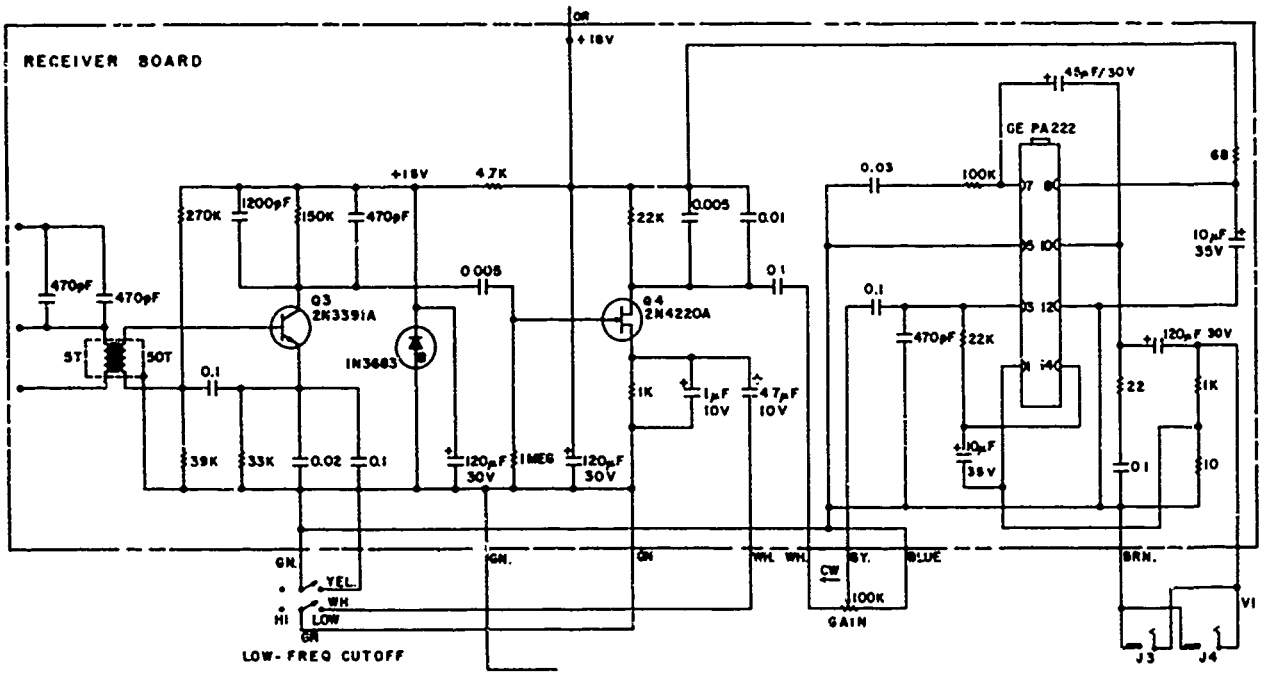

FIGURE 61. CIRCUIT DIAGRAM, RECEIVER, SYSTEM No. 3

of blood pressure from various anatomical sites.

Special Features:

(1) Nonlinear mixer, which is relatively insensitive to amplitude modulation.

(2) Split disc transducers of similar size and construction can be interchanged freely without objectionable degradation of system performance.

(3) Current limited charging circuit prevents damage to nickel-cadmium batteries from overcharging.

(4) Panel meter indicates battery voltage or oscillator activity.

SECTION III

REQUIRED EQUIPMENT

The following auxiliary equipment is required to operate System No. 3:

(1) Piezoelectric transducer with 3-foot leads and Dage connectors;

(2) Headphones with greater than 300 ohms impedance; or a recorder with response from 50 to 1500 hertz or a direct writing recorder with envelope detector, i.e., Offner Dynograph with Type 9822 Log Audio Coupler;

(3) Pressure cuff (modified);

(4) Ultrasonic coupling jelly (Aquasonic 100, a product of Parker Laboratories) or equivalent;

(5) A source of charging power at 117 volts, 60 through 400 hertz, at a current of 20 milliamperes.

SECTION IV

OPERATING INSTRUCTIONS

1. System Operation

The battery should first charged in accordance with instructions in Section V of this appendix. Disconnect the line charging cord from the Amphenol connector at the rear of the unit to minimize line noise interference.

(1) Connect one lead of the transducer to the transmit RF bulkhead fitting, and the other to the receive bulkhead fitting, see Figure 58.

(2) Connect the audio sound system or chart recorder to the terminals marked "Audio Output" and turn the front panel control switch to "ON/CHECK BATT." The front panel meter will indicate the battery voltage under full load, with each microampere being equivalent to 1 volt. The nominal battery voltage is 18 volts.

(3) Turn the selector switch past "ON" to "XTAL V." Now the front panel meter indicates relative oscillator output, with 7 microamperes being the normal indication.

(4) Place ultrasonic coupling jelly on the transducers; this should produce a loud audio response. A further confidence check can be made by listening to blood flow signals, which can be detected by placing the transducer over an artery or vein near the surface of the skin such as in the antecubital fossa.

(5) Place the "LOW FREQ. CUTOFF" selector switch in the "HIGH" position for normal use, or in the "LOW" position to emphasize the low frequencies associated with slow moving artery walls such as are found in infants and patients with low blood pressure.

(6) Blood pressure is measured as follows:

(a) Place the Velcro-backed transducer on the matching Velcro patch of the modified cuff so that the proximal edge of the transducer contacts the cuff centerline. See Figure 12.

(b) Place the transducer directly over the brachial artery.

(c) Inflate the cuff and observe the arterial opening events, aurally or graphically, while slowly venting cuff pressure. Systolic pressure will approximate the cuff pressure that is

measured coincident with the first Doppler component signal observed as cuff pressure decreases. Diastolic pressure will be indicated by a marked change in the frequency spectrum and reduction in the amplitude of the Doppler component signals. Adjust the gain control for a comfortable listening level. The system may break into oscillation if the gain control is advanced fully clockwise; if this should happen, simply reduce the gain setting until the oscillation disappears.

2. Oscillator-Driver Tuning Procedure

The oscillator and driver have been adjusted for optimum performance and in normal operation should need no further adjustment. Slight differences in transducers can be compensated for by adjusting the tuning capacitors marked "Receiver" and "Transmitter."

In order to change the operating frequency, it is necessary to expose the internal adjustments by removing four screws from the bottom of the case and sliding the chassis out the back of the case. Adjustment procedure is as follows:

(1) Connect the system for normal operation, and turn it on.

(2) Measure the output frequency of the transmitter, using a calibrated receiver, high impedance oscilloscope, or electronic counter.

(3) Use a nonmetallic tuning wand with a 0.100-inch hex wrench (General Cement Company alignment tool No. 8282) to adjust the position of the core in the coil on the transmitter board nearer the front panel. Tune the inductance until the proper frequency is achieved. Clockwise motion decreases frequency; tuning range is from 7 to 9 megahertz.

(4) Monitor the transmitter output voltage by turning the front panel selector switch to "XTAL V." Tune the core in the driver collector coil (nearest the back panel) for maximum output voltage as indicated by the front panel meter. With a sensitive transducer, the system gain may be excessive with this peak setting, resulting in feedback oscillation. If this is the case, reduce the amplitude of the transducer driving voltage by turning the core of the driver coil in a clockwise direction. It is important that the output amplitude be reduced by clockwise motion of the core because this minimizes battery drain. Output voltage can also be decreased by turning the core counterclockwise, but this causes excessive battery drain.

SECTION V

POWER PACK

Nickel-cadimum battery packs provide rechargeable, high energy density, portable power sources for electronic equipment. The life of these batteries is excellent if certain precautions are observed in charging and in use.

1. Charging

The pair of Burgess CD25L, 9-volt nickel-cadimum batteries can be recharged from a fully depleted condition to a fully charged condition in approximately 14 hours. Simply connect the charging cord to the "CHARGE" Amphenol connector on the back of the unit, plug it into a three-wire grounded AC line outlet, and turn the front panel selector switch to "CHARGE." The panel meter indicates the battery voltage. The internal charging circuit is current-limited to a safe value, and the unit can be left on charge for many weeks without damage to the batteries.

2. Use

Before using, always disconnect the charging cord from the back panel connector, to eliminate hum and noise originating in the AC mains.

The battery should never be allowed to completely discharge, as some of the cells in series will be reverse charged and may rupture from excessive pressure caused by internally generated gas. A voltage below 15 volts as indicated by the front panel meter in the "ON/CHECK BATT." position indicates a definite need for charging. The system will need recharging after approximately 5 hours of use.

APPENDIX IV

OPERATING INSTRUCTIONS

for

TWO-STAGE LIMITER

SECTION I

INTRODUCTION

The information concerning vessel wall velocity is encoded in the Doppler shift frequency; that is to say, the desired signal is frequency modulated. The returning radio frequency carrier, however, will be amplitude modulated to a certain extent because of transducer motion, changes in attenuation, and changing interference patterns caused by constructive and destructive interference such as used in an interferometer. If the demodulator system is sensitive to amplitude modulation, as is the balanced mixer, then the audio output signal will be a composite of the desired Doppler shift frequency and interfering amplitude modulated artifacts.

Unwanted amplitude modulation can be removed by passing the RF signal through a limiter, which is a special type of amplifier whose output saturates at a given level after the input threshold voltage is exceeded. The two-stage limiter designed for this project consists of a transformer coupled, cascaded pair of RCA CA3028 integrated circuit differential amplifiers. The input transistors are fed from a constant current source contained within the IC so that the voltage excursions of the output transistor's collector are limited, while high frequency capability is maintained because none of the transistors are saturated. The output voltage remains constant within 1 decibel of 80 millivolts for input voltages between 2 millivolts rms and 3 volts rms.

SECTION II

DESCRIPTION OF TWO-STAGE LIMITER

Specific Purpose:	To remove unwanted amplitude modulation from the RF signal.
Physical Specifications: (See Fig. 62)	Size--6-1/2 X 3 X 2-3/4 inches
	Weight--Approximately 1 pound
	Power--Two paralleled 9-volt, Burgess H 146X mercury batteries
	Connectors--Type BNC, output transformer isolated
Electrical Specifications: (See Circuit Diagram, Fig. 63)	Frequency--8 megahertz with a Q of 80, adjustable over the range of ±0.5 megahertz
	Input Requirements--more than 2 millivolts rms and less than 3 volts rms, across 2000 ohms
	Output--30 millivolts rms across transformer isolated source impedance of 50 ohms
	Gain Below Limiting Threshold--33 decibels
	Battery Drain--20 milliamperes
	Battery Life--35 hours, continuous operation.
Other Applications:	Tuned isolation amplifier with 33 decibels of gain for signals less than 1.5 millivolts rms.
Special Features:	Cascaded differential integrated circuit amplifiers, with internally controlled constant current sources to permit limiting without saturating the transistors.

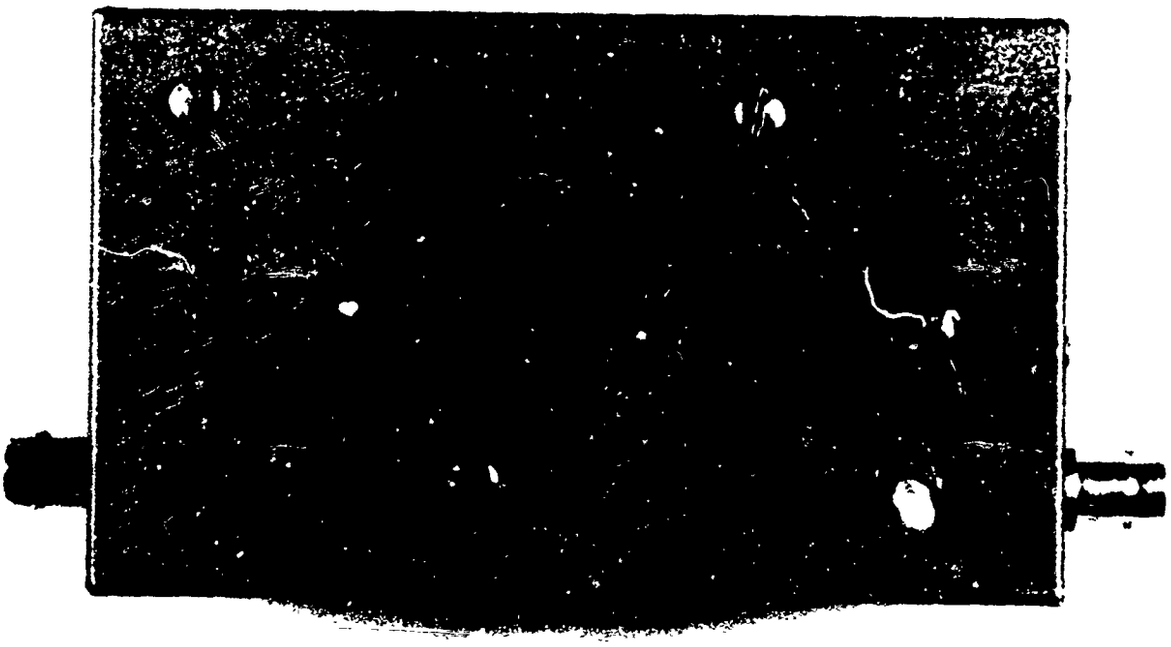

FIGURE 62. TWO-STAGE LIMITER

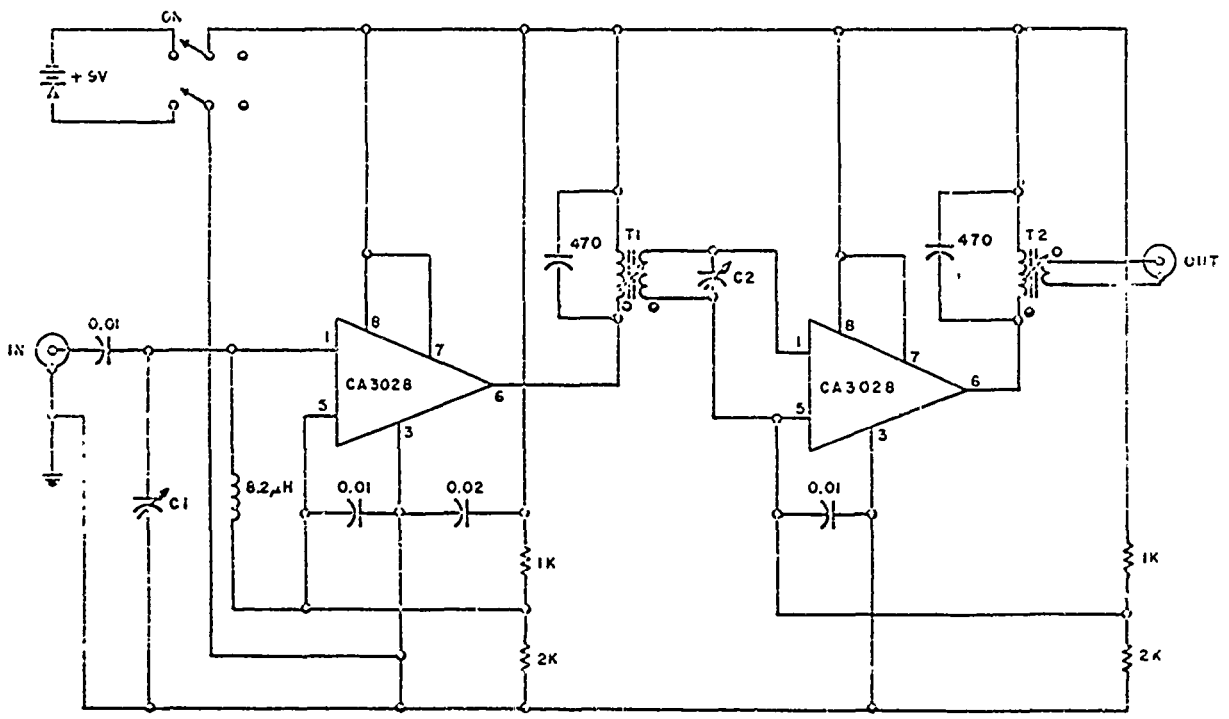

FIGURE 63. CIRCUIT DIAGRAM, TWO-STAGE LIMITER

SECTION III

REQUIRED EQUIPMENT

No special operating equipment is required for the limiter, other than a source for its input signal and a load for its output, but it is designed to operate in conjunction with ultrasonic Doppler systems Nos. 1A, 2 or 3.

SECTION IV

OPERATING INSTRUCTIONS

1. System Operation

(1) Connect the input terminal of the limiter to the output terminal of the RF preamplifier in System 1, or to the receiver transducer in System 3.

(2) Connect the limiter output cable to the "R" port of Systems 1 or 2, or to the receiver connector on System 3.

(3) Turn on the power switch. The limiter will now remove amplitude modulation from signals greater than 2 millivolts rms and at a frequency of 8 megahertz.

2. Maintenance

The only maintenance required is replacement of two Burgess H 146X mercury batteries after their voltage under load has dropped below 6 volts, which should take place after about 35 hours of continuous use.

3. Limiter Tuning Procedure

The limiter has a Q of 80 at a center frequency of 8 megahertz, so its 3-decibel bandwidth is 100 kilohertz. If the limiter is to be used with a transducer that is excited at a frequency outside of this bandwidth, the limiter should be retuned for maximum performance at the operating frequency.

(1) Connect the output of the limiter to an indicating device, such as an RF millivolt meter, or high frequency oscilloscope.

(2) Connect the input of the limiter to a signal generator set to the desired operating frequency.

(3) Turn the power switch on.

(4) Attenuate the input signal until the output is less than 50 millivolts rms In order for the effect of tuning changes to be noticeable in the output, it is essential that the limiter be operated in its linear region, below its limiting threshold. As tuning progresses, the sensitivity will increase, and it will be necessary to keep reducing the input signal so that the output level remains below 50 millivolts rms.

(5) Adjust both coils and both tuning capacitors for maximum output, preferably in this order: Output transformer T2 (near the power switch); variable capacitor across the secondary of the interstage coupling transformer; the core of the interstage coupling transformer; and the input variable capacitor (near the input connector).

(6) Repeat Step (5) since there is some interaction, particularly in the interstage coupling transformer and its resonating capacitor.

Security Classification

DOCUMENT CONTROL DATA - R & D

(Security classification of title, body of abstract and indexing annotation must be entered when the overall report is classified)

1. ORIGINATING ACTIVITY *(Corporate author)* Southwest Research Institute 8500 Culebra Road San Antonio, TX 78228	2a. REPORT SECURITY CLASSIFICATION UNCLASSIFIED 2b. GROUP N/A

3. REPORT TITLE

DEVELOPMENT OF INDIRECT BLOOD PRESSURE SENSING TECHNIQUE FOR AEROSPACE VEHICLE AND SIMULATOR USE. VOLUME II. DESIGN CHARACTERISTICS AND OPERATING INSTRUCTIONS

4. DESCRIPTIVE NOTES *(Type of report and inclusive dates)*

Final Report 14 June 1966 - 28 February 1968

5. AUTHOR(S) *(First name, middle initial, last name)*

Ray W. Ware, MD
Charles J. Laenger, Sr.
Chester A. Heath

6. REPORT DATE	7a. TOTAL NO. OF PAGES	7b. NO. OF REFS
August 1968	46	

8a. CONTRACT OR GRANT NO. AF 33(615)-5283 b. PROJECT NO. 7222 c. d.	9a. ORIGINATOR'S REPORT NUMBER(S) 9b. OTHER REPORT NO(S) *(Any other numbers that may be assigned this report)* AMRL-TR-67-201 (II)

10. DISTRIBUTION STATEMENT

This document has been approved for public release and sale; its distribution is unlimited.

11. SUPPLEMENTARY NOTES	12. SPONSORING MILITARY ACTIVITY Aerospace Medical Research Laboratories Aerospace Medical Div., Air Force Systems Command, Wright-Patterson AFB, OH 45433

13. ABSTRACT

Research was performed to develop and evaluate an ultrasonic Doppler method for indirect measurement of arterial blood pressure in the aerospace environment. The design characteristics and operating instructions for the three measuring systems and for the two-stage limiter are detailed in this report.

DD FORM 1 NOV 65 1473

Security Classification

Security Classification

14. KEY WORDS	LINK A ROLE	LINK A WT	LINK B ROLE	LINK B WT	LINK C ROLE	LINK C WT
Ultrasound						
Doppler						
Bloodpressure						
Measurement						
Instrument						
Design Characteristics						
Operating Instructions						

Security Classification

END