CR-884

AD 678568

Gulf General Atomic
Incorporated

P.O. Box 608, San Diego, California 92112

GAMD-8497
Addendum

Category A

AN EULERIAN METHOD FOR CALCULATING STRENGTH DEPENDENT DEFORMATION

DDC
DEC 3 1968

Work done by:

J. K. Dienes
L. J. Hageman

Report written by:

J. K. Dienes
L. J. Hageman

This document, which was prepared primarily for internal use at Gulf General Atomic, may contain preliminary or incomplete data. It is informal and is subject to revision or correction; it does not, therefore, represent a final report.

This document has been approved for public release and sale; its distribution is unlimited.

Advanced Research Projects Agency
ARPA Order No. 71-62
Ballistic Research Laboratories
Contract No. DA-044495-AMC-1481(X)
GGA Project 6003

February 2, 1968

Reproduced by the
CLEARINGHOUSE
for Federal Scientific & Technical
Information Springfield Va. 22151

30

BEST
AVAILABLE COPY

ADDENDUM TO REPORT ON THE
OIL-RPM COMPUTER CODE

This addendum describes a number of improvements to the version of OIL-RPM documented in GAMD-8497. In EDIT and MAP the changes represent primarily a streamlining of the program. The small change to CDT ensures stability in a more rational manner. The requirements for enlarging the grid are also described, and a flow chart of the equation of state subroutine (ES) is included.

This document has been approved for public release and sale; its distribution is unlimited.

REVISED VERSIONS OF CDT, EDIT AND MAP

The improved version of CDT computes the time step using the speed $|u| + C$ of a sound wave relative to the grid, where u denotes the maximum of the radial and axial velocities. This allows the user to set the stability fraction (STAB) to .6, or perhaps larger, and retains stability; where in the earlier version it was recommended that STAB be set to .4. This version of CDT can be directly substituted for the one listed previously.

However, to use the improved versions of EDIT and MAP the following statements must be added to subroutine INPUT after statement #50:

```
FRSTD = 1.
IF(KUNIT.LE.0)  KUNIT = 7
IF(MSYMBL.LE.0) MSYMBL = 26
```

The prominent features of the new EDIT routine are:

(1) It prints the angular distributions of the mass, momenta, and energy.

(2) It uses a variable (KUNIT) instead of a constant to specify the unit number of the dump tape. (The user can start a second dump tape by setting KUNIT = 9 in the restart deck. The program will read from unit 7 but will write out on unit 9.)

(3) An end of file mark is written at the end of each restart dump. (The next dump writes over this end of file mark.)

(4) The general flow and organization of EDIT have been simplified making the routine easier to modify.

The new MAP routine is more efficiently coded, and uses only one variable, MSYMBL, to determine the degree of resolution for all the maps.

```
      SUBROUTINE CDT
C     ..............................................................
C
      DIMENSION AMX(2502),AIX(2502),U(2502)  ,V(2502)  ,P(2502)  ,
     1          X(52)    ,XX(54)   ,TAU(52)  ,JPM(52)  ,
     2          Y(102)   ,YY(104)  ,FLEFT(102), YAMC(102), SIGC(102),
     3          GAMC(102),
     4          PK(15),   Z(150)   ,
     5          XP(26,51),YP(26,51),
     6          PL(204)  ,UL(204)  ,PR(204)  ,
     7           RSN(52),   RST(52),
     8          CMXP(5)  ,CMYP(5)  ,IJ(5)    ,JK(5)    ,
     9          DX(52)   ,DDX(54)  ,DY(102)  ,DDY(104) ,
     $          SNB(52)  ,STB(52)  ,UK(52,3) ,VK(52,3) ,RHO(52,3)
C            *** DIMENSIONED ARRAYS
C            *** Z-BLOCK IS SAVED ON TAPE.
      COMMON     Z
      COMMON    PK
      COMMON  YY,      XX
      COMMON  DDX,     DDY
      COMMON  AMX,     AIX,     U,     V,     P
      COMMON  TAU,     JPM
      COMMON  UL ,     PL
      COMMON  XP ,     YP,      CMXP, CMYP
C            *** NON-DIMENSIONED VARIABLES
      COMMON        AID    ,AMMV  ,AMMY  ,AMPY  ,AMUR  ,AMUT  ,AMVR  ,
     1AMVT  ,DELEB ,DELER ,DELET ,DELM  ,DTODX ,DXYMIN,EAMMP ,EAMPY ,
     2E     ,ERDUMP,I     ,I3    ,IWS   ,J     ,K     ,KA    ,KB    ,
     3LL    ,MD    ,ME    ,MZT   ,NERR  ,NK    ,NPRINT,
     4NR    ,NRZ   ,NULLE ,PIDTS ,SIEMIN,SNR   ,SNT   ,STR   ,SOLID ,
     5SUM   ,TESTRH,TWOPI ,URR   ,WS    ,WSA   ,WSB   ,WSC   ,WFLAGF,
     6WFLAGL,WFLAGP
C
C            *** THE FOLLOWING EQUIVALENCES MAKE AVAILABLE
C                X(0), Y(0), DX(0), DY(0)
C
      EQUIVALENCE (XX(2), X(1)),  (YY(2), Y(1))
      EQUIVALENCE (DDX(2), DX(1)),  (DDY(2), DY(1))
C
C            *** SPECIAL EQUIVALENCES FOR PH2 ONLY
C
      EQUIVALENCE          (UL,FLEFT),        (UL(103),YAMC),
     1                     (PL,GAMC,PR),      (PL(103),SIGC)
C
C            *** SPECIAL EQUIVALENCES FOR PH3 ONLY
C
      EQUIVALENCE          (UL,RSN),
     1                     (PL,RST),          (P,UK),
     2                     (P(157),VK),       (P(313),SNB),
     3                     (P(365),STB),      (P(417),RHO)
C
C            *** SPECIAL EQUIVALENCES FOR EDIT
C
      EQUIVALENCE (PR(1), IJ),  (PR(6), JK)
C
C            *** Z-STORAGE EQUIVALENCES
C
      EQUIVALENCE                        (Z(  1),PROB  ),(Z(  2),CYCLE ),
```

```
     1(Z(  3),DT     ),(Z(  4),NUMSP  ),(Z(  5),NFRELP),(Z(  6),NDUMP7),
     2(Z(  7),ICSTOP),(Z(  8),PIDY   ), (Z(  9),TOPMU ),(Z( 10),RTMU  ),
     3(Z( 11),STK1   ),(Z( 12),NUMREZ), (Z( 13),ETH   ),(Z( 14),UN14  ),
     4(Z( 15),RHINIT),(Z( 16),PROJI  ), (Z( 17),UN17  ),(Z( 18),XMAX  ),
     5(Z( 19),NZ     ),(Z( 20),NREZ   ), (Z( 21),AMDM  ),(Z( 22),UVMAX ),
     6(Z( 23),UN23   ),(Z( 24),DMIN   ), (Z( 25),JSTR  ),(Z( 26),DTNA  ),
     7(Z( 27),CVIS   ),(Z( 28),STK2   ), (Z( 29),STEZ  ),(Z( 30),NC    ),
     8(Z( 31),UN31   ),(Z( 32),NRC    ), (Z( 33),IMAX  ),(Z( 34),IMAXA ),
     9(Z( 35),JMAX   ),(Z( 36),JMAXA  ), (Z( 37),KMAX  ),(Z( 38),KMAXA )
      EQUIVALENCE
     1(Z( 39),BOTM   ),(Z( 40),BOTMV  ), (Z( 41),NUMSPT),(Z( 42),CZERO ),
     2(Z( 43),NUMSCA),(Z( 44),PRLIM  ), (Z( 45),PRDELT),(Z( 46),PRFACT)
      EQUIVALENCE
     1(Z( 47),I1     ),(Z( 48),I2     ), (Z( 49),IPCYCL),(Z( 50),TSTOP ),
     2(Z( 51),RHOFIL),(Z( 52),TARGV  ), (Z( 53),N3    ),(Z( 54),IVARDY),
     3(Z( 55),VT     ),(Z( 56),N6     ), (Z( 57),RTM   ),(Z( 58),RTMV  ),
     4(Z( 59),UN59   ),(Z( 60),N10    ), (Z( 61),N11   ),(Z( 62),GAMMA ),
     5(Z( 63),TOPM   ),(Z( 64),BOTMU  ), (Z( 65),SN    ),(Z( 66),TOPMV ),
     6(Z( 67),PRYBOT),(Z( 68),PRYTOP), (Z( 69),PRXRT ),(Z( 70),CYCPH3),
     7(Z( 71),REZFCT),(Z( 72),TARGI  ), (Z( 73),PROJU ),(Z( 74),BBOUND),
     8(Z( 75),EVAP   ),(Z( 76),ECK    ), (Z( 77),NECYCL),(Z( 78),II    ),
     9(Z( 79),JJ     ),(Z( 80),NMP    ), (Z( 81),Y2    ),(Z( 82),EZPH1 )
      EQUIVALENCE
     1(Z( 83),IVARDX),(Z( 84),T      ), (Z( 85),NMPMAX),(Z( 86),PMIN  ),
     2(Z( 87),INTER ),(Z( 88),TAYBOT), (Z( 89),TAYTOP),(Z( 90),IEMAP ),
     3(Z( 91),MC     ),(Z( 92),MR     ), (Z( 93),MZ    ),(Z( 94),MB    )
      EQUIVALENCE
     1(Z( 95),REZ    ),(Z( 96),NODUMP), (Z( 97),UN97  ),(Z( 98),UN98  ),
     2(Z( 99),UN99   ),(Z(100),EVAPM  ), (Z(101),EVAPEN),(Z(102),EVAPMU),
     3(Z(103),EVAPMV),(Z(104),EZPH2  ), (Z(105),SNL   ),(Z(106),STL   ),
     4(Z(107),TAXRT  ),(Z(108),IDNMAP), (Z(109),IPRMAP),(Z(110),ROEPS ),
     5(Z(111),RHINI  ),(Z(112),VINI   ), (Z(113),FINAL ),(Z(114),IVMAP ),
     6(Z(115),RHOZ   ),(Z(116),ESA    ), (Z(117),ESEZ  ),(Z(118),ESB   ),
     7(Z(119),ESCAPA),(Z(120),ESESP  ), (Z(121),ESESQ ),(Z(122),ESES  ),
     8(Z(123),ESALPH),(Z(124),ESBETA), (Z(125),ESCAPB),(Z(126),IUMAP ),
     9(Z(127),SS1    ),(Z(128),SS2    ), (Z(129),UMIN  ),(Z(130),SS4   )
      EQUIVALENCE
     1(Z(131),PRTIME),(Z(132),EOR    ), (Z(133),EOT   ),(Z(134),EOB   ),
     2(Z(135),EMOR   ),(Z(136),DXF    ), (Z(137),DYF   ),(Z(138),RHOMIN),
     3(Z(139),STAB), (Z(140),XIENRG),  (Z(141),XKENRG), (Z(142),XTENRG),
     4(Z(143),STT    ),(Z(144),DTMIN  ), (Z(145),TRNSFC),(Z(146),EMOT  ),
     5(Z(147),JPROJ  ),(Z(148),CNAUT  ), (Z(149),BBAR  ),(Z(150),EMOB  )
C            *** SPECIAL EQUIV FOR ES AND CDT
      EQUIVALENCE (RHOW,NULLE)
C
C
C     ..............................................................
C
C     END OF COMMON
C
C     ..............................................................
C
C                  ***CHECK COURANT CONDITION AND PARTICLE VELOCITY.
C                  ***RECORD I AND J OF ZONE WHERE DT IS CONTROLLED.
C                  ***FIRST CALCULATE PRESSURES FROM EQ. OF ST.
C
C
```

```
10      TRIAL=0.
        SRATIO=10.**10
C                   **WSC WILL BE MAXIMUM U OR V
        WSC=0.
        DO 60 I=1,I1
        K=I+1
        DO 60 J=1,I2
        RHOW=AMX(K)/(TAU(I)*DY(J))
        CALL ES
C               *** IF DENSITY OF CELL K IS LESS THAN RHOMIN, IT'S
C                   VELOCITY OR SOUND SPEED IS NOT USED IN DETERMINING DT.
        IF (RHOW.LT.RHOMIN) GO TO 60
        IF (ABS(P(K)).LT.PMIN) P(K)=0.
        IF (CNAUT.GT.0.) GO TO 20
C
C                       ***CALCULATE SOUND SPEED FOR POLYTOPIC GAS WITH
C                       ***GAMMA EQUAL TO ESA+1.
        WSD=SQRT(GAMMA*ABS(P(K))/RHOW)
        GO TO 40
C
C                     ***CHECK FOR NEGATIVE PRESSURE.
20      IF (P(K).GT.0.) GO TO 30
C               *** NEGATIVE PRESSURES NOT ALLOWED ALONG GRID BOUNDARY
C                   AND NOT ALLOWED ANYWHERE UNTIL ACTIVE GRID REACHES
C                   JSTR(INPUT PARAMETER FOR TURNING ON STRENGTH
C                   CALCULATIONS).
        IF ((IMAX.NE.1.AND.I.EQ.IMAX).OR.J.EQ.JMAX.OR.I2.LT.JSTR) P(K)=0.
C
C                     ***PRESSURE IS NEGATIVE OR ZERO
        WSD=CNAUT
        GO TO 40
C
C                           ***PRESSURE IS POSITIVE.
30      WS=CNAUT+BBAR*SQRT(P(K))
        WSA=SQRT(GAMMA*P(K)/RHOW)
        WSD=AMAX1(WS,WSA)
C               *** WSB IS MAXIMUM OF RADIAL AND AXIAL VELOCITY OF CELL K.
40      WSB=AMAX1(ABS(U(K)),ABS(V(K)))
C               *** WSC STORES MAXIMUM VELOCITY OF CELLS USED TO DETERMINE
C                   DT. PRINTED AS MAXUV.
        WSC=AMAX1(WSC,WSB)
C               ***WSD IS SOUND SPEED OF CELL K.
        WS=WSD+WSB
        IF (WS.LE.TRIAL) GO TO 50
C               *** TRIAL STORES MAXIMUM VELOCITY PLUS SOULND SPEED OF
C                   CELL USED TO DETERMINE DT.
        TRIAL=WS
C               *** CMAX IS SOUND SPEED OF CELL CONTROLLING DT.
        CMAX=WSD
50      IF (WS.LE.0.) GO TO 60
        DXYMIN=AMIN1(DX(I),DY(J))
        RATIO=DXYMIN/WS
        IF (RATIO.GT.SRATIO) GO TO 60
C               *** I AND J OF CELL CONTROLLING DT STORED IN N10 AND N11
C                   FOR PRINTOUT.
        N10=I
        N11=J
```

```
C               *** SRATIO IS SMALLEST VALUE CALCULATED FOR RATIO.
      SRATIO=RATIO
C
C                     ***END OF I, J LOOP
60    K=K+IMAX
C               *** IF TRIAL.LE.0. THERE IS PROBABLY AN ERROR IN THE INPUT
C                   PARAMETERS FOR THE INITIAL VELOCITY, ENERGY OR DENSITY
C                   OF THE PACKAGES.
65    IF (TRIAL.LE.0.) GO TO 180
C               *** IF FINAL.EQ.0.USE STAB FOR VALUE OF STABILITY FRACTION
C                   IF FINAL.GT.0.USE A GEOMETRIC PROGRESSION WITH STAB
C                   AS THE INITIAL VALUE AND FINAL AS THE FINAL VALUE.
      IF (FINAL.LT.0.) GO TO 70
      STAB=2.*STAB
      STAB=AMIN1(STAB,FINAL)
70    DT=STAB*SRATIO
      IF (NC.GT.0) GO TO 80
      IF (DTMIN.GT.0..OR.DTMIN.LT.0.) GO TO 80
      DTMIN = (10.**2)*DT
C
C               *** IS CONTROL-CELL ISOLATED
80    K=(N11-1)*IMAX+N10+1
      WS=0.
      IF (N10.GT.1) WS=AMX(K-1)
      IF (N10.LT.IMAX) WS=AMX(K+1)+WS
      IF (N11.GT.1) WS=AMX(K-IMAX)+WS
      IF (N11.LT.JMAX) WS=AMX(K+IMAX)+WS
      IF (WS.GT.0.) GO TO 100
C             *** ISOLATED, SO DESTROY IT.
      WS=(AIX(K)+(U(K)**2+V(K)**2)*.5)*AMX(K)
      EVAPM=EVAPM+AMX(K)
      EVAPEN=EVAPEN+WS
      ETH=ETH-WS
      EVAPMU=EVAPMU+AMX(K)*U(K)
      EVAPMV=EVAPMV+AMX(K)*V(K)

      WRITE (6,300) N10,N11
      AMX(K)=0.
      AIX(K)=0.
      P(K)=0.
      U(K)=0.
      V(K)=0.
C               *** RECALCULATE DT.
      GO TO 10
C               *** INCREMENT TIME AND CYCLE.
100   T=T+DTNA
      IF (T.LT.0.) GO TO 170
      NC=NC+1
      CYCLE=NC
C               *** RESET NPRINT. NPRINT=1 ON PRINT CYCLES.
      NPRINT=0
C               *** DEFINE VELOCITY AND ENERGY CUTOFFS USED IN MAP AND PH2.
      UMIN=TRIAL*ROEPS
      SIEMIN=UMIN**2
      PMIN=RHOZ*CNAUT*UMIN
      IF (PMIN.LT.ROEPS) PMIN=UMIN*RHOZ*TRIAL
      WRITE (6,310) N10,N11,T,DT,DTMIN,CMAX,U(K),V(K),DX(N10),DY(N11),UM
```

```
      1IN,PMIN
C            *** AFTER STAB.GE.FINAL CHECK ON SIZE OF DT. DTMIN CAN
C                BE DEFINED IN INPUT DECK.
      IF (STAB.LT.FINAL) GO TO 106
104   IF (DT.LE.DTMIN) GO TO 160
106   CONTINUE
      DTNA=DT
C            *** TESTRH = .2*RHOZ
C                THE PRESSURE OF COLD,FREE SURFACE CELLS IS REDUCED BY A
C                FACTOR,F, WHICH ACCOUNTS FOR THE EFFECT OF FREE SURFACE
C                LOCATION ON THE PRESSURE GRADIENT. F IS THE DENSITY OF
C                THE LOWEST DENSITY ADJACENT CELL DIVIDED BY THE NORMAL
C                DENSITY,OR F IS TESTRH - WHICHEVER IS SMALLEST
      WT=TESTRH
      DO 150 I=1,I1
      K=I+1
      DO 150 J=1,I2
      RHOW=AMX(K)/(DY(J)*TAU(I))
      WTB=WT
      IF (AIX(K).GE.ESESQ) GO TO 150
      IF (RHOW.LT.SOLID) GO TO 150
      IF (I.EQ.IMAX) GO TO 110
      WTA=AMX(K+1)/(DY(J)*TAU(I+1))
      IF (WTA.LT.WT) WTB=WTA
110   IF (I.EQ.1) GO TO 120
      WTA=AMX(K-1)/(DY(J)*TAU(I-1))
      IF (WTA.LT.WTB) WTB=WTA
120   IF (J.EQ.JMAX) GO TO 130
      KA=K+IMAX
      WTA=AMX(KA)/(DY(J+1)*TAU(I))
      IF (WTA.LT.WTB) WTB=WTA
130   IF (J.EQ.1) GO TO 140
      KB=K-IMAX
      WTA=AMX(KB)/(DY(J-1)*TAU(I))
      IF (WTA.LT.WTB) WTB=WTA
140   IF (WTB.LT.WT) P(K)=P(K)*WTB/RHOZ
150   K=K+IMAX
      GO TO 200
C
C                    *** DT TOO SMALL
160   NK=104
      GO TO 190
C                    *** T IS NEGATIVE
170   NK=102
      GO TO 190
C            *** DT WILL BE NEGATIVE OR ZERO.
180   NK=65
      GO TO 190
190   NR=3
      CALL ERROR
C
C                      ***FIND THE MAXIMUM PRESSURE ON EACH COLUMN AND
C                      ***STORE ITS CELL NUMBER AS JPM. THIS WILL BE USED
C                      ***IN DETERMINING THE REGION IN WHICH PHASE 3 IS
C                      ***USED. WSA WILL BE A RUNNING MAXIMUM OF THE
C                      ***PRESSURE IN THE GRID.
200   WSA=-1.E30
```

```
      DO 270 I=1,I1
C             *** WS WILL BE LOCAL MAXIMUM OF COLUMN I.
      WS=-1.E30
      K=(I2-1)*IMAX+I+1
      JP=I2
      JINTL=1
C             *** START AT TOP OF COLUMN AND LOOK FOR PRESSURE PEAK.
210   DO 220 J=JINTL,I2
      IF (P(K).LT.WS) GO TO 230
      WS=P(K)
C             *** JP IS J-INDEX OF CELL WITH PEAK PRESSURE.
      JP=JP-1
220   K=K-IMAX
C             *** IF YOU FALL THROUGH,THEN THERE WAS NO MAXIMUM IN THIS
C                 COLUMN
      GO TO 260
C
C     3328          *** COME HERE IF PRESSURE HAS PASSED A LOCAL MAXIMUM
C             *** PTEMP IS PEAK PRESSURE OF COLUMN I.
C
230   PTEMP=P(K+IMAX)
      IF (PTEMP.LT.WSA) GO TO 240
C             *** WSA WILL BE PEAK PRESSURE IN ACTIVE GRID (ABSOLUTE
C                 MAXIMUM).
      WSA=PTEMP
      GO TO 250
C
C     3329          *** PTEMP IS LOCAL MAXIMUM BUT IS LESS THAN ABSOLUTE
C                 MAXIMUM
240   IF (PTEMP.GT.0.3*WSA) GO TO 250
C
C             *** THIS LOCAL MAXIMUM IS NOT BIG ENOUGH TO USE FOR JPM
C
      JINTL=J+1
C
      JP=JP-1
C
C             ***  WE MAY HAVE REACHED BOTTOM OF COLUMN
      IF (JINTL.GE.I2) GO TO 260
C             *** CONTINUE DOWN COLUMN SEARCHING FOR SUFFICIENTLY LARGE
C                 LOCAL MAXIMUM.
      WS=P(K)
      K=K-IMAX
      GO TO 210
C             *** IF POSITION OF PEAK PRESSURE IN COLUMN I DOES NOT
C                 ADVANCE FROM ONE CYCLE TO THE NEXT, DO NOT CHANGE
C                 VALUE OF JPM.
250   JP=JP+1
      IF (JP.LE.JPM(I)) GO TO 270
      JPM(I)=JP
C
C                     ***IF JPM IS ZERO THE SHOCK HAS NEVER REACHED THIS
C                     ***LOCATION. IF IT IS NONZERO THE SHOCK HAS PASSED
C                     ***AND WE MUST    CONTINUE TO INCREASE I UNTIL THE
C                     ***RIGHT BOUNDARY OF THE SHOCK IS REACHED.
260   IF (JPM(I).LE.0) GO TO 280
C             *** END OF I LOOP.
```

```
270   CONTINUE
C             *** IF PEAK PRESSURE OF COLUMN I HAS GONE BELOW A THIRD
C                 THE GRID MAXIMUM, AND IF JPM(I)=0. FROM THE PREVIOUS
C                 CYCLE, WE HAVE REACHED THE RIGHT EDGE OF THE SHOCK.
280   CONTINUE
C              *** JPM(I) MUST BE MONOTONIC DECREASING
      K=I1-1
      DO 290 IWS=1,K
      I=I1-IWS
290   IF (JPM(I).LT.JPM(I+1)) JPM(I)=JPM(I+1)
      RETURN
C
300   FORMAT (/4H CDT,I3,I4,2X,31HISOLATED CONTROL CELL DESTROYED/)
310   FORMAT (/4H CDT,I3,I4,4H  T=,1PE12.6,5H  DT=,1PE9.3,8H  DTMIN=,1PE
     19.3,4H  C=,1PE9.3,4H  U=,1PE9.3,4H  V=,1PE9.3,5H  DX=,1PE9.3,5H  D
     2Y=,1PE9.3/13X,5HUMIN=,1PE9.3,7H  PMIN=1PE9.3)
      END
```

```
      SUBROUTINE EDIT
C     ..............................................................
C
      DIMENSION AMX(2502),AIX(2502),U(2502)  ,V(2502)  ,P(2502)  ,
     1          X(52)    ,XX(54)   ,TAU(52)  ,JPM(52)  ,
     2          Y(102)   ,YY(104)  ,FLEFT(102), YAMC(102), SIGC(102),
     3          GAMC(102),
     4          PK(15),   Z(150)   ,
     5          XP(26,51),YP(26,51),
     6          PL(204)  ,UL(204)  ,PR(204)  ,
     7           RSN(52),   RST(52),
     8          CMXP(5)  ,CMYP(5)  ,IJ(5)    ,JK(5)    ,
     9          DX(52)   ,DDX(54)  ,DY(102)  ,DDY(104) ,
     $          SNB(52)  ,STB(52)  ,UK(52,3) ,VK(52,3) ,RHO(52,3)
C            *** B L A N K    C O M M O N
C                 DIMENSIONED  VARIABLES
      COMMON    Z
      COMMON    PK
      COMMON    YY,        XX
      COMMON    DDX,       DDY
      COMMON    AMX,       AIX,       U,         V,         P
      COMMON    TAU,       JPM
      COMMON    UL,        PL,
      COMMON    XP,        YP,        CMXP,      CMYP
C                 NON-DIMENSIONED  VARIABLES
      COMMON        AID    ,AMMV  ,AMMY  ,AMPY  ,AMUR  ,AMUT  ,AMVR  ,
     1AMVT  ,DELEB ,DELER ,DELET ,DELM  ,DTODX ,DXYMIN,EAMMP ,EAMPY ,
     2E     ,ERDUMP,I     ,IWS   ,I3    ,J     ,K     ,KA    ,
     3KB    ,LL    ,MD    ,ME    ,MZT   ,NERR  ,NK    ,NPRINT,
     4NR    ,NRZ   ,NULLE ,PIDTS ,SIEMIN,SNR   ,SNT   ,STR   ,SOLID ,
     5SUM   ,TESTRH,TWOPI ,URR   ,WS    ,WSA   ,WSB   ,WSC   ,WFLAGF,
     6WFLAGL,WFLAGP
      COMMON LAST
C
C
C            *** THE FOLLOWING EQUIVALENCES DEFINE STORAGE FOR
C                X(0), Y(0), DX(0), DY(0)
C
      EQUIVALENCE  (XX(2), X(1))    ,(YY(2), Y(1)),
     1             (DDX(2),DX(1))   ,(DDY(2),DY(1))
C
C            *** SPECIAL EQUIVALENCES FOR PH2 ONLY
C
      EQUIVALENCE          (UL,FLEFT),          (UL(103),YAMC),
     1                     (PL,GAMC,PR),        (PL(103),SIGC)
C
C            *** SPECIAL  EQUIVALENCES FOR PH3 ONLY
C
      EQUIVALENCE          (UL,RSN),
     1                     (PL,RST),            (P,UK),
     2                     (P(157),VK),         (P(313),SNB),
     3                     (P(365),STB),        (P(417),RHO)
C
C            *** SPECIAL EQUIVALENCES FOR EDIT
C
      EQUIVALENCE (PR(1), IJ),  (PR(6), JK),  (UL(103),CRAD)
C
C            *** Z-STORAGE EQUIVALENCES
```

```
C
      EQUIVALENCE                                (Z(  1),PROB   ),(Z(  2),CYCLE ),
     1(Z(  3),DT     ),(Z(  4),NUMSP  ),(Z(  5),NFRELP),(Z(  6),NDUMP7),
     2(Z(  7),ICSTOP),(Z(  8),PIDY   ), (Z(  9),TOPMU ),(Z( 10),RTMU  ),
     3(Z( 11),STK1   ),(Z( 12),NUMREZ), (Z( 13),ETH   ),(Z( 14),UN14  ),
     4(Z( 15),RHINIT),(Z( 16),PROJI  ), (Z( 17),KUNIT ),(Z( 18),XMAX  ),
     5(Z( 19),NZ     ),(Z( 20),NREZ   ), (Z( 21),AMDM  ),(Z( 22),UVMAX ),
     6(Z( 23),UN23   ),(Z( 24),DMIN   ), (Z( 25),JSTR  ),(Z( 26),DTNA  ),
     7(Z( 27),CVIS   ),(Z( 28),STK2   ), (Z( 29),STEZ  ),(Z( 30),NC    ),
     8(Z( 31),UN31   ),(Z( 32),NRC    ), (Z( 33),IMAX  ),(Z( 34),IMAXA ),
     9(Z( 35),JMAX   ),(Z( 36),JMAXA  ), (Z( 37),KMAX  ),(Z( 38),KMAXA )
      EQUIVALENCE
     1(Z( 39),BOTM   ),(Z( 40),BOTMV  ), (Z( 41),NUMSPT),(Z( 42),CZERO ),
     2(Z( 43),NUMSCA),(Z( 44),PRLIM   ), (Z( 45),PRDELT),(Z( 46),PRFACT)
      EQUIVALENCE
     1(Z( 47),I1     ),(Z( 48),I2     ), (Z( 49),IPCYCL),(Z( 50),TSTOP ),
     2(Z( 51),RHOFIL),(Z( 52),TARGV   ), (Z( 53),N3    ),(Z( 54),IVARDY),
     3(Z( 55),VT     ),(Z( 56),N6     ), (Z( 57),RTM   ),(Z( 58),RTMV  ),
     4(Z( 59),UN59   ),(Z( 60),N10    ), (Z( 61),N11   ),(Z( 62),GAMMA ),
     5(Z( 63),TOPM   ),(Z( 64),BOTMU  ), (Z( 65),SN    ),(Z( 66),TOPMV ),
     6(Z( 67),PRYBOT),(Z( 68),PRYTOP), (Z( 69),PRXRT  ),(Z( 70),CYCPH3),
     7(Z( 71),REZFCT),(Z( 72),TARGI   ), (Z( 73),PROJU  ),(Z( 74),BBOUND),
     8(Z( 75),EVAP   ),(Z( 76),ECK    ), (Z( 77),NECYCL),(Z( 78),II    ),
     9(Z( 79),JJ     ),(Z( 80),NMP    ), (Z( 81),Y2    ),(Z( 82),EZPH1 )
      EQUIVALENCE
     1(Z( 83),IVARDX),(Z( 84),T       ), (Z( 85),NMPMAX),(Z( 86),PMIN  ),
     2(Z( 87),INTER  ),(Z( 88),TAYBOT), (Z( 89),TAYTOP),(Z( 90),UN90  ),
     3(Z( 91),MC     ),(Z( 92),MR     ), (Z( 93),MZ    ),(Z( 94),MB    )
      EQUIVALENCE
     1(Z( 95),REZ    ),(Z( 96),NODUMP), (Z( 97),UN97  ),(Z( 98),UN98  ),
     2(Z( 99),UN99   ),(Z(100),EVAPM  ), (Z(101),EVAPEN),(Z(102),EVAPMU),
     3(Z(103),EVAPMV),(Z(104),EZPH2   ), (Z(105),SNL   ),(Z(106),STL   ),
     4(Z(107),TAXRT  ),(Z(108),MSYMBL), (Z(109),UN109 ),(Z(110),ROEPS ),
     5(Z(111),RHINI  ),(Z(112),VINI   ), (Z(113),FINAL ),(Z(114),FRSTD ),
     6(Z(115),RHOZ   ),(Z(116),ESA    ), (Z(117),ESEZ  ),(Z(118),ESB   ),
     7(Z(119),ESCAPA),(Z(120),ESESP   ), (Z(121),ESESQ ),(Z(122),ESES  ),
     8(Z(123),ESALPH),(Z(124),ESBETA), (Z(125),ESCAPB),(Z(126),UN126 ),
     9(Z(127),SS1    ),(Z(128),SS2    ), (Z(129),UMIN  ),(Z(130),SS4   )
      EQUIVALENCE
     1(Z(131),PRTIME),(Z(132),EOR     ), (Z(133),EOT   ),(Z(134),EOB   ),
     2(Z(135),EMOR   ),(Z(136),DXF    ), (Z(137),DYF   ),(Z(138),RHOMIN),
     3(Z(139),STAB), (Z(140),XIENRG),  (Z(141),XKENRG), (Z(142),XTENRG),
     4(Z(143),STT    ),(Z(144),DTMIN  ), (Z(145),TRNSFC),(Z(146),EMOT  ),
     5(Z(147),JPROJ  ),(Z(148),CNAUT  ), (Z(149),BBAR  ),(Z(150),EMOB  )
C
C     ..................................................................
C
C     END OF COMMON
C
C     ..................................................................
C
      DIMENSION  PROPI(50),  AMK(15),  QK(15),  TAB(15), CRAD(52)
C            *** SPECIAL EQUIV. FOR EDIT
      EQUIVALENCE        (UL,PROPI),  (PL(51), AMK),  (PL(66),QK),
     1                   (PL(81),TAB)
      EQUIVALENCE (PR(1),TIETAR),(PR(2),TKETAR),(PR(3),TETAR ),
     1            (PR(4),TARMAS),(PR(5),TARMV ),(PR(6),TARMVP),
```

```
     2            (PR(7),RAMOMA),(PR(8),PRAMOA),(PR(9),TIEPRO),
     3            (PR(10),TKEPRO),(PR(11),TEPRO),(PR(12),PRMAS),
     4            (PR(13),PRMV  ),(PR(14),PRMVP),(PR(15),RAMOMB),
     5            (PR(16),PRAMOB)
C
C      . . .
```

```
      DTNA=DT
60    GO TO LOCA, (414,412)
C             *** YES, IT IS TIME TO PRINT. NPRINT=1 FLAGS THIS AS A
C                 PRINT CYCLE.
70    NPRINT=1
C             *** AVOID TRUNCATION
      T=PRTIME
C             *** IS IT TIME TO RESCALE PRINT INTERVAL
      IF (T*(1.+ROEPS).LT.PRLIM.OR.NUMSCA.LE.0) GO TO 80
C             *** CHANGE PRINT INTERVAL AND THE TIME FOR THE NEXT
C                 RESCALING.
      PRDELT=PRDELT*PRFACT
      PRLIM=PRLIM*PRFACT
      NUMSCA=NUMSCA-1
C             *** DEFINE TIME FOR NEXT PRINT.
80    PRTIME=T+PRDELT
      IWS=(PRTIME+.5*PRDELT)/PRDELT
      WS=IWS
      PRTIME=WS*PRDELT
C             *** WILL WE BYPASS TIME TO PRINT
      IF (PRTIME.GE.T+DT) GO TO 90
C             *** YES, ADJUST DT
      DT=PRTIME-T
      DTNA=DT
90    GO TO LOCB, (110,412)
C             *** PRINTING ON CYCLES. IS THIS A PRINT CYCLE
100   IF (MOD(NC,IPCYCL).NE.0) GO TO LOCA, (414,412)
C             *** YES. NPRINT = 1 FLAGS THIS AS A PRINT CYCLE.
      NPRINT=1
C             *** IS THIS THE CYCLE TO RESCALE PRINT INTERVAL
      IF    (NC.LT.PRLIM.OR.NUMSCA.LE.0) GO TO LOCB, (110,414)
C             *** YES. MULTIPLY NUMBER OF CYCLES BETWEEN PRINTS BY PRFACT
      IPCYCL=INT(PRFACT)*IPCYCL
      PRLIM=PRFACT*PRLIM
      NUMSCA=NUMSCA-1
      GO TO LOCB, (110,412)
C                 *** TEST FOR SHORT OR LONG PRINT
C             *** NUMSP COUNTS NUMBER OF SHORT PRINTS SINCE LAST LONG
C                 PRINT. NUMSPT COUNTS NUMBER OF PRINTS SINCE LAST
C                 TAPE DUMP.
110   NUMSP=NUMSP+1
      NUMSPT=NUMSPT+1
      IF (NUMSP.NE.NFRELP) GO TO 130
      NUMSP=0
C                 *** I3=I1 SIGNALS A LONG PRINT
120   I3=I1
C             *** PRINT OF RESTART CYCLE WILL BE SHORT IF PK(3).LT.-1.
      IF (PK(3).LT.-1..AND.WFLAGF.GT.0.) I3=1
130   IF(NUMSPT.NE.NDUMP7) GO TO 190
      GO TO 150
C                 *** SET WFLAGL=1. TO SAY THIS IS LAST CYCLE OF RUN
140   WFLAGL=1.
145   I3=I1
      NPRINT=1
      NUMSP=0
C     . . . . . . . . . . . . . . . . . . . . . . . . . . . . . . . . . . . .
C
```

```
C             *** TAPE DUMP
C
C     . . .
```

```
      N=N+1
220   DO 230 K=N,KMAX
      WS=AMX(K)
      TARMAS=TARMAS+WS
      TIETAR=TIETAR+WS*AIX(K)
      TKETAR=TKETAR+.5*WS*(U(K)**2+V(K)**2)
      WSA=WS*V(K)
      TARMV=TARMV+WSA
      IF (WSA.GT.0.) TARMVP=TARMVP+WSA
      RAMOMA=RAMOMA+AMX(K)*U(K)
      IF (U(K).GT.0.) PRAMOA=PRAMOA+AMX(K)*U(K)
230   CONTINUE
      TETAR=TIETAR+TKETAR
      TEPRO=TIEPRO+TKEPRO
      DO 240 J=1,8
      PR(J+16)=PR(J)+PR(J+8)
240   CONTINUE
      IF (IMAX.GT.1) GO TO 260
C
C             *** IF DOING A 1-D PROBLEM DIVIDE TOTALS BY NZ WHERE
C                 NZ=4**(NUMBER OF TIMES THE GRID HAS BEEN REZONED.)
C
      PROPI(1)=ETH/NZ
      PROPI(2)=ECK/NZ
      PROPI(4)=EZPH1/NZ
      PROPI(5)=EZPH2/NZ
      PROPI(6)=BBOUND/NZ
      DO 250 J=1,24
250   PROPI(J+6)=PR(J)/NZ
      PROPI(31)=BOTM/NZ
      PROPI(32)=RTM/NZ
      PROPI(33)=TOPM/NZ
      PROPI(34)=EVAPM/NZ
      PROPI(35)=EMOB/NZ
      PROPI(36)=EMOR/NZ
      PROPI(37)=EMOT/NZ
      PROPI(38)=EVAPEN/NZ
      PROPI(39)=BOTMU/NZ
      PROPI(40)=RTMU/NZ
      PROPI(41)=TOPMU/NZ
      PROPI(42)=EVAPMU/NZ
      PROPI(43)=BOTMV/NZ
      PROPI(44)=RTMV/NZ
      PROPI(45)=TOPMV/NZ
      PROPI(46)=EVAPMV/NZ
      PROPI(47)=EOB/NZ
      PROPI(48)=EOR/NZ
      PROPI(49)=EOT/NZ
      WRITE (6,520) PROB,T,NC,PROPI(1),PROPI(2),NECYCL,(PROPI(J),J=4,6)
      WRITE (6,530) (PROPI(J),J=7,49)
      GO TO 270
260   WRITE (6,520) PROB,T,NC,ETH,ECK,NECYCL,EZPH1,EZPH2,BBOUND
      WRITE (6,530) ((PR(J),J=1,24),BOTM,RTM,TOPM,EVAPM,EMOB,EMOR,EMOT,E
     1VAPEN,BOTMU,RTMU,TOPMU,EVAPMU,BOTMV,RTMV,TOPMV,EVAPMV,EOB,EOR,EOT)
270   WRITE (6,570) (JPM(I),I=1,I1)
C             *** ENERGY TOTALS STORED FOR LATER USE IN TRACER POINT
C                 PLOTS.
```

```
      XIENRG=PR(17)
      XKENRG=PR(18)
      XTENRG=PR(19)
C      . . .
```

```
      WRITE (6,580)
      N=0
      DO 300 J=1,JJ
      DO 300 I=1,II
      IF (XP(I,J).LE.0..AND.YP(I,J).LE.0.) GO TO 300
      IP=INT(XP(I,J))
      JP=INT(YP(I,J))
      KK=JP*IMAX+IP+2
      IF (AMX(KK).GT.0.) GO TO 290
      XP(I,J)=0.
      YP(I,J)=0.
      GO TO 300
290   N=N+1
      CMXP(N)=X(IP)+DX(IP+1)*(XP(I,J)-INT(XP(I,J)))
      CMYP(N)=Y(JP)+DY(JP+1)*(YP(I,J)-INT(YP(I,J)))
C
C             *** IJ, JK  = THE I AND J OF THE CELL THE TRACER POINT
C                   ORIGINATED IN .  (TRACER POINTS CHANGE POSITION IN
C                   XP AND YP ARRAYS WHEN THEY ARE WEEDED OUT
C                   DURING REZONE.)
C
      IJ(N)=2**(NRZ+1)*(I-1)+1
      JK(N)=2**(NRZ+1)*(J-1)+1
      IF (N.LT.5) GO TO 300
      WRITE (6,500) (IJ(M),JK(M),CMXP(M),CMYP(M),M=1,N)
      N=0
300   CONTINUE
      IF (N.EQ.0) GO TO 305
      WRITE (6,500) (IJ(M),JK(M),CMXP(M),CMYP(M),M=1,N)
305   IF (IMAX.EQ.1) GO TO 360
C     . . . . . . . . . . . . . . . . . . . . . . . . . . . . . . . . . .
C
C             *** PRINT SYMBOLIC CONTOUR MAPS OF COMPRESSION, PRESSURE,
C                 VELOCITY, AND INTERNAL ENERGY UNLESS DOING A 1-D
C                 PROBLEM.
C
C     . . . . . . . . . . . . . . . . . . . . . . . . . . . . . . . . . .
C
      CALL MAP
C
C     . . . . . . . . . . . . . . . . . . . . . . . . . . . . . . . . . .
C
C             *** COMPUTE CRATER DEPTH AND VOLUME. AID SUMS DEPTH.
C
C     . . . . . . . . . . . . . . . . . . . . . . . . . . . . . . . . . .
      WRITE(6,490)
      AID = 0.
C             *** START AT AXIS
      DO 330 I =1,I1
      CRAD(I) = .5*DX(I)+X(I-1)
      PL(I) = 0.
      UL(I) = 0.
      DO 320 J =1,I2
      K=(J-1)*IMAX + I + 1
C             *** WS IS COMPRESSION
      WS = AMX(K)/(TAU(I)*DY(J)*RHOZ)
      IF(WS.LT.(.99)) GO TO 310
```

```
      GO TO 325
  310 AID = AID + 1.-WS
C             *** NOT AT BOTTOM OF CRATER YET
  320 CONTINUE
  325 IAID = INT(AID)
C             *** UL(I) IS CM. DEPTH OF CRATER IN COLUMN I
C             *** PL(I) IS CELL DEPTH OF CRATER IN COLUMN I
      UL(I) = Y(IAID) + DY(IAID+1)*(AID-FLOAT(IAID)) - Y(JPROJ)
      IF(UL(I).GT.0..OR.UL(I).LT.0.) PL(I) = AID
      AID = 0.
  330 CONTINUE
C             *** PRINT CRATER DEPTHS
      DO 340 I=1,I1
      IF(UL(I).LT.0..OR.UL(I).GT.0.) GO TO 335
      GO TO 340
  335 WRITE(6,495) I, PL(I), CRAD(I), UL(I)
  340 CONTINUE
C             *** COMPUTE  CRATER VOLUME AND VOLUME OF HEMISPHERE WITH
C                 RADIUS=UL(1).
      WSB=0.
      DO 345 I=1,I1
      IF(UL(I).LT.0.) GO TO 350
C             *** WSB GIVES CRATER VOLUME
      WSB = UL(I)*TAU(I)+WSB
  345 CONTINUE
  350 CONTINUE
C             *** PRINT CRATER VOLUME ONLY WHEN GREATER THAN ZERO
      IF(WSB.GT.0.) GO TO 355
      GO TO 360
C             *** WSC GIVES VOLUME OF HEMISPHERE
355   WSC=2.0944*(UL(1))**3
      WRITE(6,498) WSB, WSC
C     . . .
```

```
390   KSPACE=KSPACE+1
      IF (KSPACE.GT.1) GO TO 400
      WRITE (6,560)
400   CONTINUE
410   CONTINUE
C
      IF (NPRINT.EQ.1) GO TO 412
      ASSIGN 412 TO LOCA
      ASSIGN 412 TO LOCB
      IF (PRDELT.NE.0.) GO TO 50
      GO TO 100
C             *** CHECK ON SIZE OF ENERGY DISCREPANCY
412   IF (ABS(ECK).GT.DMIN) GO TO 430
C                 *** IF LAST CYCLE, REWIND TAPE
414   IF (WFLAGL.EQ.0.) GO TO 416
      REWIND 7
416   WFLAGP=0.
      WFLAGF=0.
C             *** NERR=1 WHEN EDIT IS CALLED BY ERROR.
      IF (NERR.EQ.1) RETURN
C             *** SHOULD GRID BE REZONED ON THIS CYCLE
      IF ((REZ.NE.0..AND.REZFCT.NE.0..AND.NUMREZ.GT.0).OR.SS4.NE.0.) GO
     1TO 419
C     . . . . . . . . . . . . . . . . . . . . . . . . . . . . . . . . .
C
      RETURN
C
C     . . . . . . . . . . . . . . . . . . . . . . . . . . . . . . . . .
C
C             *** R E Z O N E
C
C     . . . . . . . . . . . . . . . . . . . . . . . . . . . . . . . . .
419   CALL REZONE
C             *** MUST CALL CDT TO RECALCULATE PRESSURES
      TNOW=T
      DTNOW=DT
      REZ=0.
      SS4=0.
      CALL CDT
      T=TNOW
      DT=DTNOW
      DTNA=DT
      NUMREZ=NUMREZ-1
C
C            *** NREZ = NUMBER OF REZONES ALLOWED (INPUT VALUE OF NUMREZ)
C                NUMREZ = NUMBER OF REZONES ALLOWED MINUS THE NUMBER
C                         OF REZONES PERFORMED  SINCE T=0.
C
      NRZ=NREZ-NUMREZ
C             *** NZ USED IN PRINTOUT OF TOTALS FOR 1-D PROBLEMS
      NZ=4.**NRZ
C
      GO TO 145
C     . . . . . . . . . . . . . . . . . . . . . . . . . . . . . . . . .
C
C             *** ERROR CONDITIONS
C
```

```
C     . . .
```

```
      SUBROUTINE MAP
C     ..............................................................
C
      DIMENSION AMX(2502),AIX(2502),U(2502)   ,V(2502)   ,P(2502)   ,
     1          X(52)    ,XX(54)   ,TAU(52)   ,JPM(52)   ,
     2          Y(102)   ,YY(104)  ,FLEFT(102), YAMC(102), SIGC(102),
     3          GAMC(102),
     4          PK(15),   Z(150)   ,
     5          XP(26,51),YP(26,51),
     6          PL(204)  ,UL(204)  ,PR(204)   ,
     7           RSN(52),   RST(52),
     8          CMXP(5)  ,CMYP(5)  ,IJ(5)     ,JK(5)     ,
     9          DX(52)   ,DDX(54)  ,DY(102)   ,DDY(104)  ,
     $          SNB(52)  ,STB(52)  ,UK(52,3)  ,VK(52,3)  ,RHO(52,3)
C            *** B L A N K    C O M M O N
C                  DIMENSIONED  VARIABLES
      COMMON    Z
      COMMON    PK
      COMMON    YY,        XX
      COMMON    DDX,       DDY
      COMMON    AMX,       AIX,       U,         V,         P
      COMMON    TAU,       JPM
      COMMON    UL,        PL,
      COMMON    XP,        YP,        CMXP,      CMYP
C                  NON-DIMENSIONED  VARIABLES
      COMMON         AID    ,AMMV  ,AMMY  ,AMPY  ,AMUR  ,AMUT  ,AMVR  ,
     1AMVT  ,DELEB ,DELER ,DELET ,DELM  ,DTODX ,DXYMIN,EAMMP ,EAMPY ,
     2E     ,ERDUMP,I     ,IWS   ,I3    ,J     ,K     ,KA    ,
     3KB    ,LL    ,MD    ,ME    ,MZT   ,NERR  ,NK    ,NPRINT,
     4NR    ,NRZ   ,NULLE ,PIDTS ,SIEMIN,SNR   ,SNT   ,STR   ,SOLID ,
     5SUM   ,TESTRH,TWOPI ,URR   ,WS    ,WSA   ,WSB   ,WSC   ,WFLAGF,
     6WFLAGL,WFLAGP
      COMMON LAST
C
C
C            *** THE FOLLOWING EQUIVALENCES DEFINE STORAGE FOR
C                X(0), Y(0), DX(0), DY(0)
C
      EQUIVALENCE  (XX(2), X(1))   ,(YY(2), Y(1)),
     1             (DDX(2),DX(1))  ,(DDY(2),DY(1))
C
C            *** SPECIAL EQUIVALENCES FOR PH2 ONLY
C
      EQUIVALENCE          (UL,FLEFT),         (UL(103),YAMC),
     1                     (PL,GAMC,PR),       (PL(103),SIGC)
C
C            *** SPECIAL  EQUIVALENCES FOR PH3 ONLY
C
      EQUIVALENCE          (UL,RSN),
     1                     (PL,RST),           (P,UK),
     2                     (P(157),VK),        (P(313),SNB),
     3                     (P(365),STB),       (P(417),RHO)
C
C            *** SPECIAL EQUIVALENCES FOR EDIT
C
      EQUIVALENCE (PR(1), IJ),  (PR(6), JK),  (UL(103),CRAD)
C
C            *** Z-STORAGE EQUIVALENCES
```

```
C
      EQUIVALENCE                                (Z(  1),PROB  ),(Z(  2),CYCLE ),
     1(Z(  3),DT     ),(Z(  4),NUMSP ),(Z(  5),NFRELP),(Z(  6),NDUMP7),
     2(Z(  7),ICSTOP),(Z(  8),PIDY  ), (Z(  9),TOPMU ),(Z( 10),RTMU  ),
     3(Z( 11),STK1   ),(Z( 12),NUMREZ), (Z( 13),ETH   ),(Z( 14),UN14  ),
     4(Z( 15),RHINIT),(Z( 16),PROJI ), (Z( 17),KUNIT ),(Z( 18),XMAX  ),
     5(Z( 19),NZ     ),(Z( 20),NREZ  ), (Z( 21),AMDM  ),(Z( 22),UVMAX ),
     6(Z( 23),UN23   ),(Z( 24),DMIN  ), (Z( 25),JSTR  ),(Z( 26),DTNA  ),
     7(Z( 27),CVIS   ),(Z( 28),STK2  ), (Z( 29),STEZ  ),(Z( 30),NC    ),
     8(Z( 31),UN31   ),(Z( 32),NRC   ), (Z( 33),IMAX  ),(Z( 34),IMAXA ),
     9(Z( 35),JMAX   ),(Z( 36),JMAXA ), (Z( 37),KMAX  ),(Z( 38),KMAXA )
      EQUIVALENCE
     1(Z( 39),BOTM   ),(Z( 40),BOTMV ), (Z( 41),NUMSPT),(Z( 42),CZERO ),
     2(Z( 43),NUMSCA),(Z( 44),PRLIM ), (Z( 45),PRDELT),(Z( 46),PRFACT)
      EQUIVALENCE
     1(Z( 47),I1     ),(Z( 48),I2    ), (Z( 49),IPCYCL),(Z( 50),TSTOP ),
     2(Z( 51),RHOFIL),(Z( 52),TARGV ), (Z( 53),N3    ),(Z( 54),IVARDY),
     3(Z( 55),VT     ),(Z( 56),N6    ), (Z( 57),RTM   ),(Z( 58),RTMV  ),
     4(Z( 59),UN59   ),(Z( 60),N10   ), (Z( 61),N11   ),(Z( 62),GAMMA ),
     5(Z( 63),TOPM   ),(Z( 64),BOTMU ), (Z( 65),SN    ),(Z( 66),TOPMV ),
     6(Z( 67),PRYBOT),(Z( 68),PRYTOP), (Z( 69),PRXRT ),(Z( 70),CYCPH3),
     7(Z( 71),REZFCT),(Z( 72),TARGI ), (Z( 73),PROJU ),(Z( 74),BBOUND),
     8(Z( 75),EVAP   ),(Z( 76),ECK   ), (Z( 77),NECYCL),(Z( 78),II    ),
     9(Z( 79),JJ     ),(Z( 80),NMP   ), (Z( 81),Y2    ),(Z( 82),EZPH1 )
      EQUIVALENCE
     1(Z( 83),IVARDX),(Z( 84),T      ), (Z( 85),NMPMAX),(Z( 86),PMIN  ),
     2(Z( 87),INTER ),(Z( 88),TAYBOT), (Z( 89),TAYTOP),(Z( 90),UN90  ),
     3(Z( 91),MC     ),(Z( 92),MR    ), (Z( 93),MZ    ),(Z( 94),MB    )
      EQUIVALENCE
     1(Z( 95),REZ    ),(Z( 96),NODUMP), (Z( 97),UN97  ),(Z( 98),UN98  ),
     2(Z( 99),UN99   ),(Z(100),EVAPM ), (Z(101),EVAPEN),(Z(102),EVAPMU),
     3(Z(103),EVAPMV),(Z(104),EZPH2 ), (Z(105),SNL   ),(Z(106),STL   ),
     4(Z(107),TAXRT ),(Z(108),MSYMBL), (Z(109),UN109 ),(Z(110),ROEPS ),
     5(Z(111),RHINI ),(Z(112),VINI  ), (Z(113),FINAL ),(Z(114),FRSTD ),
     6(Z(115),RHOZ  ),(Z(116),ESA   ), (Z(117),ESEZ  ),(Z(118),ESB   ),
     7(Z(119),ESCAPA),(Z(120),ESESP ), (Z(121),ESESQ ),(Z(122),ESES  ),
     8(Z(123),ESALPH),(Z(124),ESBETA), (Z(125),ESCAPB),(Z(126),UN126 ),
     9(Z(127),SS1    ),(Z(128),SS2   ), (Z(129),UMIN  ),(Z(130),SS4   )
      EQUIVALENCE
     1(Z(131),PRTIME),(Z(132),EOR    ), (Z(133),EOT   ),(Z(134),EOB   ),
     2(Z(135),EMOR   ),(Z(136),DXF   ), (Z(137),DYF   ),(Z(138),RHOMIN),
     3(Z(139),STAB), (Z(140),XIENRG), (Z(141),XKENRG), (Z(142),XTENRG),
     4(Z(143),STT    ),(Z(144),DTMIN ), (Z(145),TRNSFC),(Z(146),EMOT  ),
     5(Z(147),JPROJ ),(Z(148),CNAUT ), (Z(149),BBAR  ),(Z(150),EMOB  )
C
C     ..................................................................
C
C     END OF COMMON
C
C     ..................................................................
C
      DIMENSION PROP(52), WSMAX(5), VALUE(41)
C            *** SPECIAL EQUIVALENCE FOR MAP
      EQUIVALENCE  (UL,PROP),  (UL(52),WSMAX),  (UL(157),VALUE)
C
      DIMENSION ALE(41)
      DATA ALE/     2H .,2H -,2H A,2H B,2H C,2H D,2H E,2H F,
```

```
     1          2H G,2H H,2H I,2H J,2H K,2H L,2H M,2H N,2H O,
     2          2H P,2H Q,2H R,2H S,2H T,2H U,2H V,2H W,2H X,
     3          2H Y,2H Z,2H +,2H *,2H 1,2H 2,2H 3,2H 4,2H 5,
     4          2H 6,2H 7,2H 8,2H 9,2H 0,2H  /
      DIMENSION XUM(41)
      DATA XUM/     2H .,2H -,2H-A,2H-B,2H-C,2H-D,2H-E,2H-F,
     1          2H-G,2H-H,2H-I,2H-J,2H-K,2H-L,2H-M,2H-N,2H-O,
     2          2H-P,2H-Q,2H-R,2H-S,2H-T,2H-U,2H-V,2H-W,2H-X,
     3          2H-Y,2H-Z,2H-+,2H-*,2H-1,2H-2,2H-3,2H-4,2H-5,
     4          2H-6,2H-7,2H-8,2H-9,2H-0,2H  /
      IDL=MIN0(I1,54)
      JDL=12
      IF (NC.NE.0) GO TO 1
      IDL=MIN0(IMAX,54)
      JDL=JMAX
C
C             *** FIND MAXIMUM VALUE IN ACTIVE GRID OF EACH PROPERTY
C
C             *** COMPRESSION
1     WSMIN=10E20
      WSMAX(1)=0.
      DO 2 J=1,JDL
      DO 2 I=1,IDL
      K=(J-1)*IMAX+I+1
      IF(AMX(K).EQ.0.) GO TO 2
      COMP = AMX(K)/(DY(J)*TAU(I)*RHOZ)
      WSMAX(1) = AMAX1(WSMAX(1),COMP)
      WSMIN = AMIN1(WSMIN,COMP)
2     CONTINUE
      IF(WSMAX(1).GT.WSMIN) GO TO 3
      WSMIN = 0.
C             *** PRESSURE
3     WSMAX(2)=0.
      DO 4 J=1,JDL
      DO 4 I=1,IDL
      K=(J-1)*IMAX+I+1
4     WSMAX(2) = AMAX1(WSMAX(2),ABS(P(K)))
C             *** RADIAL VELOCITY
      WSMAX(3)=0.
      DO 6 J=1,JDL
      DO 6 I=1,IDL
      K=(J-1)*IMAX+I+1
6     WSMAX(3) = AMAX1(WSMAX(3),ABS(U(K)))
C             *** AXIAL VELOCITY
      WSMAX(4)=0.
      DO 8 J=1,JDL
      DO 8 I=1,IDL
      K=(J-1)*IMAX+I+1
8     WSMAX(4) = AMAX1(WSMAX(4),ABS(V(K)))
C             *** SPECIFIC INTERNAL ENERGY
      WSMAX(5)=0.
      DO 10 J=1,JDL
      DO 10 I=1,IDL
      K=(J-1)*IMAX+I+1
10    WSMAX(5) = AMAX1(WSMAX(5),ABS(AIX(K)))
C
C             *** STORE INFORMATION TO BE PLOTTED IN PROP ARRAY
```

```
C                    A ROW AT A TIME.
C
      NPROP = 1
C               *** COMPRESSION
      J=JDL
      MS=MSYMBL+1
      WRITE(6,500)
15    DO 20 I=1,IDL
      K=(J-1)*IMAX+I+1
20    PROP(I) = AMX(K)/(TAU(I)*DY(J)*RHOZ)
      GO TO 110
C
C               *** PRESSURE
C
30    J=JDL
      MS=MSYMBL
      WRITE(6,510)
35    DO 40 I=1,IDL
      K=(J-1)*IMAX+I+1
40    PROP(I) = P(K)
      GO TO 110
C
C               *** RADIAL VELOCITY
C
50    J=JDL
      WRITE(6,520)
55    DO 60 I=1,IDL
      K=(J-1)*IMAX+I+1
60    PROP(I) = U(K)
      GO TO 110
C
C               *** AXIAL VELOCITY
C
70    J=JDL
      WRITE(6,530)
75    DO 80 I=1,IDL
      K=(J-1)*IMAX+I+1
80    PROP(I) = V(K)
      GO TO 110
C
C               *** SPECIFIC INTERNAL ENERGY
C
90    J=JDL
      WRITE(6,540)
95    DO 100 I=1,IDL
      K=(J-1)*IMAX+I+1
100   PROP(I) = AIX(K)
C
C               *** WHEN PRINTING FIRST (TOP) ROW OF MAP, COMPUTE
C                   SCALE FACTOR AND PRINT KEY.
110   IF(J.LT.JDL) GO TO 300
C
      IF(WSMAX(NPROP).GT.0.) GO TO 180
C                          *** SKIP CALCALATION OF SCALE FACTOR
      GO TO 300
C
C               *** COMPUTE SCALE FACTOR AND PRINT MAXIMUM VALUE OF
```

```
C                    EACH SYMBOL USED
C
180   SCALE = WSMAX(NPROP)/FLOAT(MS)
      IF ((AINT(SCALE*1000.)).LT.(SCALE*1000.)) GO TO 190
      GO TO 200
190   SCALE = AINT(SCALE*1000.+1)/1000.
200   CONTINUE
C
      IF(NPROP.EQ.1) GO TO 220
      VALUE(1) = 0.
      VALUE(2) = SCALE/10.
      DO 210 I=1,MS
210   VALUE(I+2) = FLOAT(I)*SCALE
      GO TO 240
C             *** VALUES FOR COMPRESSION MAP
220   VALUE(1) = WSMIN
      DO 230 I=1,MS
230   VALUE(I+1) = FLOAT(I)*SCALE
C             *** PRINT DEFINITIONS OF MAP SYMBOLS
240   ILIM1 = 1
      ILIM2 = 10
      MSP=MSYMBL + 2
250   IF (MSP.LT.ILIM2) ILIM2 = MSP
      IF (NPROP.NE.1)  GO TO 260
      WRITE(6,550) (ALE(I),I=ILIM1,ILIM2)
      WRITE(6,560) (VALUE(I),I=ILIM1,ILIM2)
      GO TO 270
260   WRITE(6,570) (ALE(I),I=ILIM1,ILIM2)
      WRITE(6,580) (VALUE(I),I=ILIM1,ILIM2)
270   IF (MSP.EQ.ILIM2) GO TO 280
      ILIM1=ILIM2+1
      ILIM2=ILIM2+10
      GO TO 250
280   WRITE(6,590)
C
C             *** ASSIGN APPROPRIATE SYMBOL TO EACH CELL IN ROW J.
C
300   DO 370 I=1,IDL
      K=(J-1)*IMAX+I+1
      IF (AMX(K).GT.0.) GO TO 310
      MA = 41
      GO TO 360
310   IF(NPROP.EQ.1) GO TO 340
      IF(ABS(PROP(I)).GT.0.) GO TO 320
      MA = 1
      GO TO 360
320   IF(ABS(PROP(I)).GT.VALUE(2)) GO TO 330
      MA = 2
      GO TO 360
330   FLOTMA = ABS(PROP(I))/SCALE + 2.
      MA = INT(FLOTMA)
      IF(FLOTMA.GT.AINT(FLOTMA)) MA=MA+1
      MA = MAX0(MA,3)
      GO TO 360
C             *** DEFINE MA FOR COMPRESSION MAP
340   IF(PROP(I).GT.WSMIN) GO TO 350
      MA=1
```

```
      GO TO 360
350   FLOTMA = ABS(PROP(I))/SCALE + 1.
      MA = INT(FLOTMA)
      IF(FLOTMA.GT.AINT(FLOTMA)) MA = MA+1
      MA = MAX0(MA,2)
C             *** STORE CHARACTER TO BE PLOTTED FOR CELL K
360   PR(I) = ALE(MA)
      IF(PROP(I).LT.0.) PR(I) = XUM(MA)
C             *** END OF I-LOOP
370   CONTINUE
C             *** PRINT J ROW OF MAP
      IF(MOD(J,5).NE.0) GO TO 380
      WRITE(6,600) J, (PR(I),I=1,IDL)
      GO TO 390
380   WRITE(6,610) (PR(I), I=1,IDL)
390   J=J-1
C             *** HAVE WE REACED BOTTOM ROW
      IF(J.EQ.0) GO TO 395
      GO TO (15,35,55,75,95),NPROP
C             *** PRINT AND LABEL X-AXIS OF MAP
395   PR(1) = ALE(29)
      WRITE(6,600) J, (PR(1),I=1,IDL)
      WRITE(6,620) (I, I=0,IDL,5)
C
      NPROP = NPROP + 1
      GO TO (400,30,50,70,90,400),NPROP
C
400   RETURN
C             *** FORMATS
500   FORMAT(1H1,4X,15HCOMPRESSION     //)
510   FORMAT(1H1,4X,15HPRESSURE        //)
520   FORMAT(1H1,4X,15HRADIAL VELOCITY//)
530   FORMAT(1H1,4X,15HAXIAL VELOCITY //)
540   FORMAT(1H1,4X,24HSPECIFIC INTERNAL ENERGY//)
550   FORMAT(16H     SYMBOL       ,10(4X,A2,4X))
560   FORMAT(16H  MAXIMUM VALUE ,10(F6.3,4X))
570   FORMAT(16H     SYMBOL       ,10(3X,A2,5X))
580   FORMAT(16H  MAXIMUM VALUE ,1P10E10.2)
590   FORMAT(//)
600   FORMAT(I10,2H I,54A2)
610   FORMAT(10X,2H I,54A2)
620   FORMAT(I12,10I10////)
      END
```

REQUIREMENTS FOR ENLARGING THE GRID

The RPM code, as it is listed in this report, can calculate at most 2500 cells. The number of rows (JMAX) cannot exceed 100, and the number of columns (IMAX) cannot exceed 50. To increase the grid size the user needs only to redimension most of the arrays in Blank Common and redefine some of the equivalences. Given IMAX and JMAX, the parameter definitions below show how the dimensions and equivalences should be redefined.

PARAMETERS:

```
IJD = IMAX * JMAX + 2
 ID = IMAX + 2
IDP = IMAX + 4
 JD = JMAX + 2
JDP = JMAX + 4
ITP = (IMAX + 2)/2
JTP = (JMAX + 2)/2
JD2 = 2 * (JMAX + 2)
ID3 = 3 * IDP
ID4 = 6 * IDP
ID5 = 9 * IDP
ID6 = 12 * IDP
```

DIMENSIONS:

```
0   AMX(IJD), AIX(IJD), U(IJD), V(IJD), P(IJD),
1   X(ID), XX(IDP), TAU(ID), JPM(ID),
2   Y(JD), YY(JDP), FLEFT(JD), YAMC(JD), SIGC(JD),
3   GAMC(JD),
4   PK(15), Z(150),
5   XP(ITP, JTP), YP(ITP,JTP),
6   PL(JD2), UL(JD2), PR(JD2),
7   RSN(ID), RST(ID),
8   CMXP(5), CMYP(5), IJ(5), JK(5),
9   DX(ID), DDX(IDP), DY(JD), DDY(JDP),
*   SNB(ID), STB(ID), UK(ID,3), VK(ID,3), RHO(ID,3)
```

EQUIVALENCES:

```
(UL,FLECT), (UL(JDP),YAMC)
(PL,GAMC,PR), (PL(JDP),SIGC)

(P(ID3),VK), (P(ID4),SNB),
(P(ID5),STB), (P(ID6),RHO)

(PR(1),IJ), (PR(6),JK), (UL(JDP),CRAD)
```

FLOW CHART OF SUBROUTINE ES

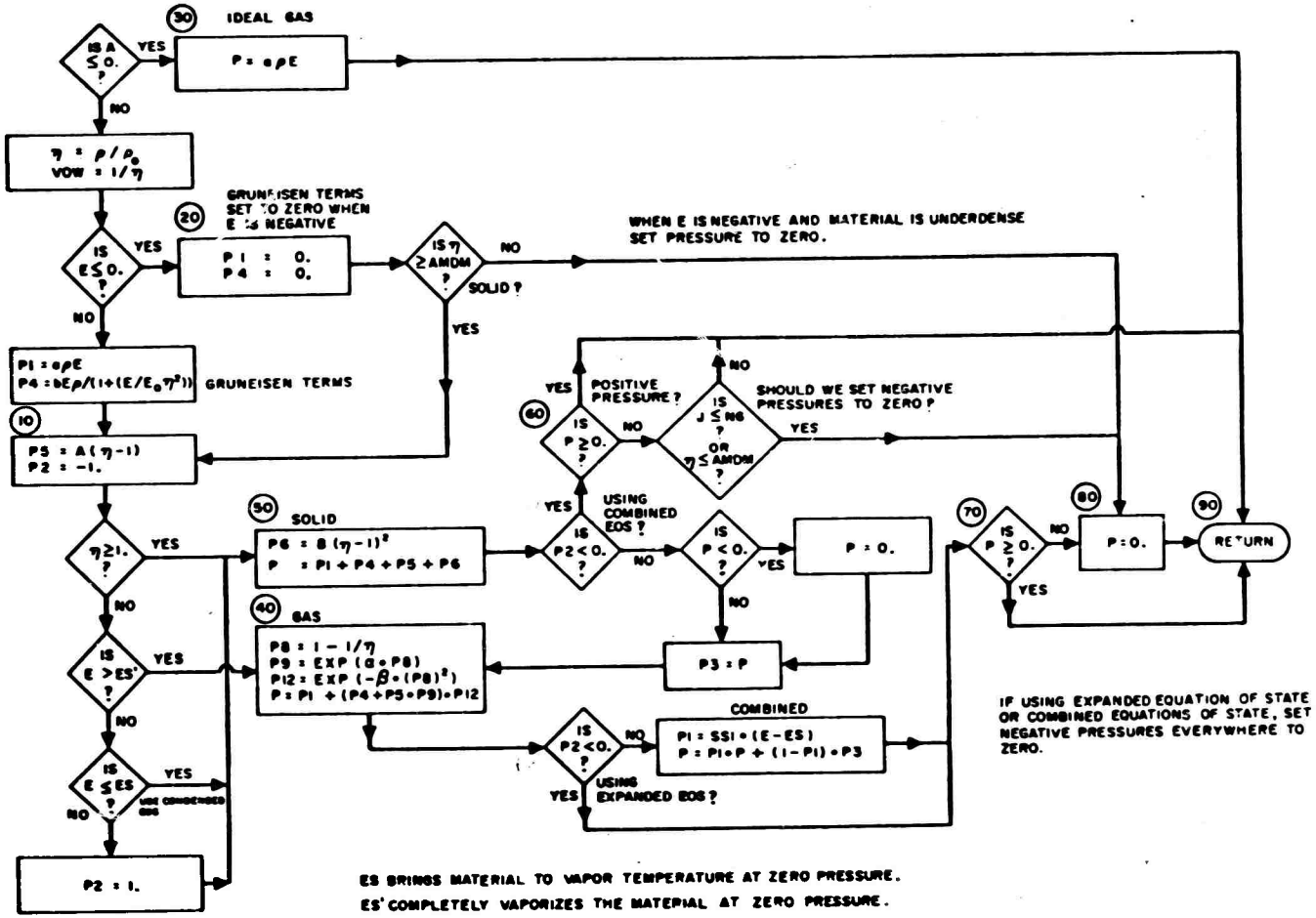

ES BRINGS MATERIAL TO VAPOR TEMPERATURE AT ZERO PRESSURE.

ES' COMPLETELY VAPORIZES THE MATERIAL AT ZERO PRESSURE.

SSI = 1/(ES' - ES)

FOR CLARITY, IN SOME EQUATIONS AN "•" IS USED TO DENOTE MULTIPLICATION.