AD 678473

FTD-HT-23-1449-67

NOT REPRODUCIBLE

FOREIGN TECHNOLOGY DIVISION

RADAR THEORY AND TECHNIQUE
(SELECTED ARTICLES)

DEC 4 1968
D

Distribution of this document is unlimited. It may be released to the Clearinghouse, Department of Commerce, for sale to the general public.

Reproduced by the
CLEARINGHOUSE
for Federal Scientific & Technical
Information Springfield Va. 22151

CFSTI
DDC
UNANNOUNCED
JUSTIFICATION
BY
DISTRIBUTION/AVAILABILITY CODES
DIST. AVAIL. and/or SPECIAL
1

This translation was made to provide the users with the basic essentials of the original document in the shortest possible time. It has not been edited to refine or improve the grammatical accuracy, syntax or technical terminology.

FTD-HT- 23-1449-67

UNEDITED ROUGH DRAFT TRANSLATION

RADAR THEORY AND TECHNIQUE (SELECTED ARTICLES)

English pages: 36

SOURCE: Moscow. Aviatsionnyy Institut. Trudy (Moscow. Aviation Institute. Transactions). 1966, pp. 36-43; 44-54; and 97-109.

Translated under: Contract F33657-67-C-1452

UR/2535-66-000-000 TT8000184-186

THIS TRANSLATION IS A RENDITION OF THE ORIGINAL FOREIGN TEXT WITHOUT ANY ANALYTICAL OR EDITORIAL COMMENT. STATEMENTS OR THEORIES ADVOCATED OR IMPLIED ARE THOSE OF THE SOURCE AND DO NOT NECESSARILY REFLECT THE POSITION OR OPINION OF THE FOREIGN TECHNOLOGY DIVISION.	PREPARED BY: TRANSLATION DIVISION FOREIGN TECHNOLOGY DIVISION WP-AFB, OHIO.

DATA HANDLING PAGE

01-ACCESSION NO. TT8000184	98-DOCUMENT LOC	39-TOPIC TAGS radar scanning, ground surveillance radar, radar engineering
02-TITLE ENERGY ASPECTS OF RADAR SCANNING OF LIMITED AREAS OF THE EARTH'S SURFACE		
47-SUBJECT AREA 17		

42-AUTHOR/CO-AUTHORS VYSOTSKIY, B. F.; VOYNICH, B. A.	10-DATE OF INFO -----66
43-SOURCE MOSCOW. AVIATSIONNYY INSTITUT. TRUDY (RUSSIAN)	68-DOCUMENT NO. FTD-HT-23-1449-67
	69-PROJECT NO. 72301-78

63-SECURITY AND DOWNGRADING INFORMATION UNCL, 0	64-CONTROL MARKINGS NONE	97-HEADER CLASN UNCL

76-REEL/FRAME NO. 1883 1457	77-SUPERSEDES	78-CHANGES	40-GEOGRAPHICAL AREA UR	NO. OF PAGES 9
CONTRACT NO.	X REF ACC. NO. AT6037042	PUBLISHING DATE	TYPE PRODUCT Translation	REVISION FREQ None

STEP NO. UR/2535/66/000/000/0036/0043	ACCESSION NO. TT8000184

ABSTRACT

Strip-scanning of the earth's surface by a radar mounted on a craft is considered. Calculations are made for two types of scanning, both of which scan narrow, fixed-width strips of the earth's surface from a preassigned altitude. In the first type the earth is scanned in the direction of the flight; with a scanned Q. ray; in the second, the earth is scanned sideways with respect to the direction of flight with a fixed ray. In the design of such a radar, it is more convenient use the relationship of the threshold signal to the absolute magnitude of the echo signal than to use only the absolute magnitude of the echo signal. Calculations indicate that the best results are obtained for strip-scanning at points distant from the craft. The width of the scanned strip is limited by the radar antenna aperture in the vertical plane. The above calculations do not compensate for the earth's curvature or attenuation of the radar signal in the atmosphere. Orig. art. has: 5 figures and 23 formulas.

DATA HANDLING PAGE

01-ACCESSION NO.	02-DOCUMENT LOC	03-TOPIC TAGS
TT8000185		computer simulation, digital computer /(U)BESM-2M digital computer

05-TITLE SIMULATION OF RANDOM NUMBERS ON AN ELECTRONIC DIGITAL COMPUTER

07-SUBJECT AREA

09

08-AUTHOR/CO-AUTHORS	10-DATE OF INFO
LIKHAREV, V. A.; DOBROLYUBOV, L. V.; KOBZEV, N. A.	-----66

42-SOURCE	60-DOCUMENT NO.
MOSCOW. AVIATSIONNYY INSTITUT. TRUDY (RUSSIAN)	FTD-HT-23-1449-67
	69-PROJECT NO. 72301-78

63-SECURITY AND DOWNGRADING INFORMATION	64-CONTROL MARKINGS	97-HEADER CLASN
UNCL, 0	NONE	UNCL

76-REEL/FRAME NO.	77-SUPERSEDES	78-CHANGES	40-GEOGRAPHICAL AREA	NO. OF PAGES
1883 1458			UR	12

CONTRACT NO.	X REF ACC. NO.	PUBLISHING DATE	TYPE PRODUCT	REVISION FREQ
	AT6037043		Translation	None

STEP NO.	ACCESSION NO.
UR/2535/66/000/000/0044/0054	TT8000185

ABSTRACT

Methods are received of obtaining random number sequences with a given law of distribution by means of uniformly distributed random numbers. Output programs of the latter are presented on a high-speed BESM-2M computer. As examples, a description is given of the derivation of one-dimensional normal, exponential, Rayleigh and generalized Rayleigh laws, as well as of the results of the verification of the correlation of uniform distribution, of the coincidence of normal and given distributions, and of an evaluation of the numerical characteristics by the method of confidence intervals. Orig. art. has: 12 formulas, 2 figures, 2 tables and 4 appendixes.

DATA HANDLING PAGE

01-ACCESSION NO.	98-DOCUMENT LOC	39-TOPIC TAGS
TT8000186		coherent radar, radar equipment, radar signal processing

09-TITLE EFFICIENCY OF COHERENT RADAR IN THE RECEPTION OF PARTIALLY COHERENT PACKETS

47-SUBJECT AREA

17

42-AUTHOR/CO-AUTHORS	10-DATE OF INFO
MIROSHNICHENKO, I. M.	-----66

43-SOURCE	68-DOCUMENT NO.
MOSCOW. AVIATSIONNYY INSTITUT. TRUDY (RUSSIAN)	FTD-HT-23-1449-67
	69-PROJECT NO. 72301-78

63-SECURITY AND DOWNGRADING INFORMATION	64-CONTROL MARKINGS	97-HEADER CLASN
UNCL, O	NONE	UNCL

76-REEL/FRAME NO.	77-SUPERSEDES	78-CHANGES	40-GEOGRAPHICAL AREA	NO. OF PAGES
1883 1459			UR	15

CONTRACT NO.	X REF ACC. NO.	PUBLISHING DATE	TYPE PRODUCT	REVISION FREQ
	AT6037047		Translation	None

STEP NO.	ACCESSION NO.
UR/2535/66/000/000/0097/0109	TT8000186

ABSTRACT

Using threshold signal-to-noise ratio as an indicator of radar capability, the author compares coherent and noncoherent precessing of a partially coherent radar signal and formulates requirements for stability of the phase-determining elements of coherent radar components (the transmitter, local and coherent heterodyne, and delay line). The analysis shows that the application of coherent processing for a partially coherent signal does not essentially reduce signal threshold energy. The graphs and formulas provided facilitate choice of the channel numbers and passband comb filter for various targets. Orig. art. has: 2 tables, 8 formulas, and 4 figures.

TABLE OF CONTENTS

3. Vysotskiy, B.F. and Voynich, B.A., Energy Aspects of Radar Scanning of Limited Areas of the Earth's Surface. 1

4. Likharev, V.A., Dobrolyubov, L.V. and Kobzev, N.A., Simulation of Random Numbers on an Electronic Digital Computer. 10

8. Miroshnichenko, I.M., Efficiency of Coherent Radar in the Reception of Partially Coherent Packets. 22

3. ENERGY ASPECTS OF RADAR SCANNING OF LIMITED AREAS OF THE EARTH'S SURFACE

Prof. B.F. Vysotskiy, Doctor of Technical Sciences,
B.A. Voynich, Candidate of Technical Sciences

The article examines the characteristics of energy calculations for airborne radar installations operating in a mode of linear scanning of the earth's surface. It considers the cases of forward scanning and lateral scanning in relation to the direction of light. The width of the scanning strip is kept constant for different observation distances.

Graphs showing the signal-to-noise ratio as a function of the sighting angle of the scanned areas are given.

In the design of radar sets for scanning the earth's surface (for example, sets used for radar cartography), there occur cases which require scanning of the surface by linear plotting of its radar image with a fixed constant strip width ΔL. In general, two types of scanning may be distinguished:

a) scanning in which the scanning ray moves in the direction of flight (forward scanning);

b) scanning in which the scanning beam moves sideways from the direction of flight.

This is illustrated in Fig. 1, which shows the two types of linear scanning projected onto the scanned surface. It is readily seen that in linear scanning the variation of echo-signal power as a function of slant distance to the target is different from the variation in ordinary cases.

Using the fundamental radar equation

$$P_{\text{пр}} \sim \frac{G^2(0)}{R_{\text{н}}^4}$$

we find that the echo-signal power for a fixed direction of the antenna in a horizontal plane is determined as follows:

$$P_{\text{пр}} \sim \frac{1}{a_{\text{н}}^2 R_{\text{н}}^4}. \qquad (1)$$

where α_v is the width of the directional diagram in a vertical plane.

In the scanning method under consideration the strip width is ΔL = const. Consequently, as the distance of the strip from the radar set increases, its complete illumination requires a narrower beam than the illumination of a nearby strip. However, as the beam is narrowed (as α_v is reduced), the amplification factor of the antenna increases. The increase in amplification factor can be compensated by a decrease in the signal power as R_n increases. In other words, α_v is a function of R_n which can increase as R_n increases.

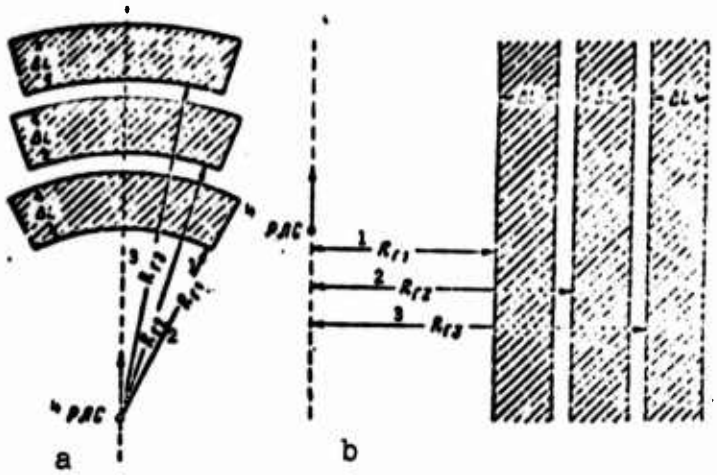

Fig. 1. Patterns for linear scanning of a surface: a) scanning in which the scanning beam moves in the direction of flight (forward scanning); b) scanning in which the scanning beam moves sideways from the direction of flight. The arrow indicates the direction of flight, and the dashed line indicates the trace of the flight trajectory. R_g is the projection onto the scanned surface of the slant distance R_n from the radar set to the edge of the strip. 1) R_{g1}; 2) R_{g2}; 3) R_{g3}; 4) radar set.

We may assume that both the flight altitude H and the strip width ΔL are specified in advance. For convenience in the subsequent calculations, we shall express R_n in terms of H and the sighting angle θ of the strip:

$$R_n = H \operatorname{cosec} \theta \tag{2}$$

and we also express α_v as $\alpha_v = \alpha_v(\theta)$; then

$$P_{пр} \sim \frac{1}{H^4 \alpha_v^2(\theta) \operatorname{cosec}^4 \theta} \sim \frac{1}{\alpha_v^2(\theta) R_n^4}. \tag{3}$$

In calculations involved in the design of radar sets, it is

more convenient to use not the absolute value of the echo signal but its ratio to the threshold signal, i.e.,

$$Q=\frac{P_{np}}{VP_{m}}\sim\frac{1}{VH^{4}\alpha_{g}^{2}(\theta)\operatorname{cosec}^{4}\theta}\approx\frac{1}{V\alpha_{g}^{2}(\theta)R_{n}^{4}}. \qquad (4)$$

The purpose of the present study is to explain this function. In Fig. 2 and in the text we have adopted the following notation: H is the flight altitude; ΔL is the width of the scanning strip on the earth's surface; R_{g1}, R_{g2}, R_{g3} are the horizontal (earth) distances to the first, second, and third scanning strips, respectively; α_{v1}, α_{v2}, α_{v3} are the widths of the directional diagram in the vertical plane which are required for illumination of the first, second, and third strips, respectively; γ_1, γ_2, γ_3 are the angles between the antenna beam and the vertical in the observation of the corresponding areas of the earth's surface; θ is the sighting angle of the scanned area of the earth's surface, i.e., the angle between the antenna beam and a plane parallel to the earth's surface; R_n is the slant distance to the target; D_v is the aperture of the antenna in the vertical plane.

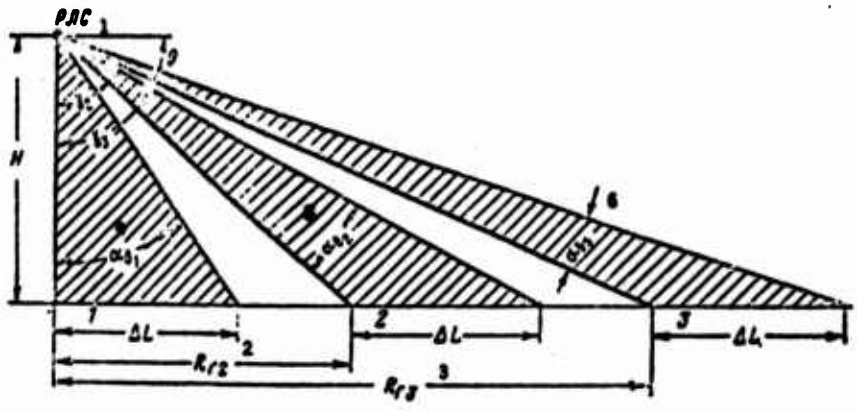

Fig. 2. Diagram showing the relative positions of the radar set and the scanning strip. 1) Radar set; 2) R_{g2}; 3) R_{g3}; 4) α_{v1}; 5) α_{v2}; 6) α_{v3}.

Q as a Function of the Sighting Angle θ of the Object in Forward Scanning

We shall assume that the radar set is at an altitude H above the surface of the earth (Fig. 2). Then in order to observe areas of the earth's surface which have a width of ΔL and are situated at different distances from the radar set, we can use antennss with different diagram widths in the vertical plane.

In the notation we have adopted:

$$\frac{R_{g2}}{H}=\operatorname{tg}\gamma_2; \qquad (5)$$

$$\frac{\Delta L}{H} = \operatorname{tg} \alpha_{v1}; \quad \alpha_{v1} = \operatorname{arctg} \frac{\Delta L}{H}. \tag{6}$$

$$\frac{R_{r2} + \Delta L}{H} = \operatorname{tg}(\gamma_2 + \alpha_{v2}); \quad \gamma_2 + \alpha_{v2} = \operatorname{arctg} \frac{R_{r2} + \Delta L}{H}. \tag{7}$$

$$\frac{R_{r3} + \Delta L}{H} = \operatorname{tg}(\gamma_3 + \alpha_{v3}) \quad \gamma_3 + \alpha_{v3} = \operatorname{arctg} \frac{R_{r3} + \Delta L}{H}. \tag{8}$$

From Formulas (5) and (7) it follows that

$$\alpha_{v2} = \operatorname{arctg} \frac{H \operatorname{tg} \gamma_2 + \Delta L}{H} - \gamma_2 = \operatorname{arctg}\left(\operatorname{tg} \gamma_2 + \frac{\Delta L}{H}\right) - \gamma_2. \tag{9}$$

By analogy with this, from Formula (8) we obtain

$$\alpha_{v3} = \operatorname{arctg} \frac{H \operatorname{tg} \gamma_3 + \Delta L}{H} - \gamma_3 = \operatorname{arctg}\left(\operatorname{tg} \gamma_3 + \frac{\Delta L}{H}\right) - \gamma_3. \tag{10}$$

Let us now write the expression for Q for forward scanning in the case of observation of isotropically scattering point objects resolvable in angle and range.

We assume

$$V \sim N_i^{-1/2}, \tag{11}$$

(where N_i is the number of object-echo pulses which is characteristic for the ordinary type of receivers which have cathode-ray tube radar scopes with afterglow.

When the object sighted is situated in the first scanned area, i.e., when $\gamma = \gamma_1 = 0$, the expression for Q_1 can be rewritten as

$$Q_1 = A \frac{1}{\left(\operatorname{arctg} \frac{\Delta L}{H}\right)^2} \cdot \frac{\cos^4 \alpha_{v1}}{H^4} = \frac{A}{H^4} \cdot \frac{\cos^4\left(\operatorname{arctg} \frac{\Delta L}{H}\right)}{\left(\operatorname{arctg} \frac{\Delta L}{H}\right)^2},$$

since $R_n = \frac{H}{\cos \alpha_{v1}}$. If we write $\Delta L/H = a$, the formula becomes

$$Q_1 = \frac{A}{H^4} \cdot \frac{\cos^4(\operatorname{arctg} a)}{(\operatorname{arctg} a)^2}. \tag{12}$$

When the object sighted is in the second area, i.e., when $\gamma \neq 0$, the formula for Q is obtained by substituting into (4) the value of α_{v2} from (9) and the value of R_n for the case $\gamma \neq 0$.

$$R_n = \frac{H}{\cos(\gamma_2 + \alpha_{v2})} = \frac{H}{\cos[\gamma_2 + \operatorname{arctg}(\operatorname{tg} \gamma_2 + a) - \gamma_2]} =$$
$$= \frac{H}{\cos[\operatorname{arctg}(\operatorname{tg} \gamma_2 + a)]};$$
$$Q_1 = \frac{A}{H^4} \cdot \frac{\cos^4[\operatorname{arctg}(\operatorname{tg} \gamma_2 + a)]}{[\operatorname{arctg}(\operatorname{tg} \gamma_2 + a) - \gamma_2]^2}. \tag{13}$$

When the object sighted is situated in the third area, the expression for Q can be obtained from (13) by a simple substitution of the angle γ_3 for the angle γ_2. From this it follows that the amount by which the assumed power exceeds the threshold value, expressed as a function of the angle, can be written in general form as

$$Q_1 = \frac{A}{H^4} \cdot \frac{\cos^4[\operatorname{arctg}(\operatorname{tg}\gamma + a)]}{(\operatorname{arctg}(\operatorname{tg}\gamma + a) - \gamma)^2}. \qquad (14)$$

If in (14) we replace the angle γ by the angle $\theta = 90° - \gamma$, we obtain an expression for Q in terms of the sighting angle θ of the object:

$$Q_1 = \frac{A}{H^4} \cdot \frac{\cos^4[\operatorname{arctg}(\operatorname{ctg}\theta + a)]}{[\operatorname{arctg}(\operatorname{ctg}\theta + a) - 90° + \theta]^2}. \qquad (15)$$

The variation of (15) for parameter values of $a = 10$ and $a = 0.25$ are shown in Figs. 3 and 4.

These graphs also show the values of the antenna aperture in the vertical plane, D_V, in relative units.

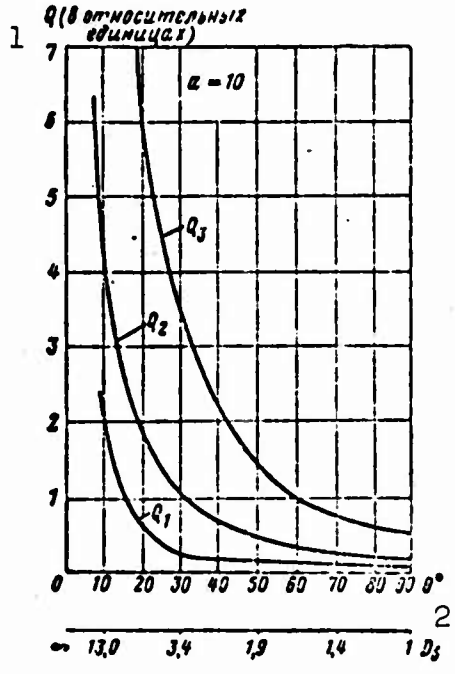

Fig. 3. Q as a function of θ, the sighting angle of the object, when the ratio of the strip width ΔL to the flight altitude H is $\Delta L/H = a = 10$. Curve Q_1 corresponds to forward scanning, $V \sim N_i^{-\frac{1}{2}}$. Curve Q_2 corresponds to lateral scanning, $V \sim R_n^{-\frac{1}{2}}$. Curve Q_3 corresponds to lateral scanning, $V \sim N_i^{-1}$. The target is a point. The diagram is symmetrical. 1) Q (in relative units); 2) D_V.

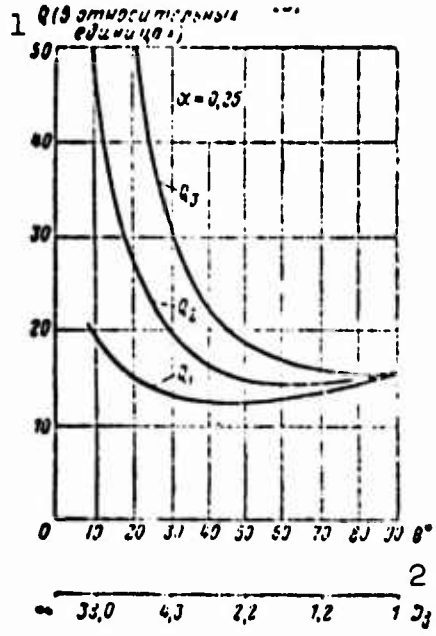

Fig. 4. Q as a function of θ, the sighting angle of the object, when the ratio of the strip width ΔL to the flight altitude H is $\Delta L/H = a = 0.25$. Curve Q_1 corresponds to forward scanning, $V \sim N_i^{-\frac{1}{2}}$. Curve Q_2 corresponds to lateral scanning, $V \sim R_n^{-\frac{1}{2}}$. Curve Q_3 corresponds to lateral scanning, $V \sim N_i^{-1}$. The target is a point; the diagram is symmetrical. 1) Q (in relative units); 2) D_v.

Q as a Function of the Sighting Angle θ when the Scanning is Lateral in Relation to the Direction of Flight

For a radar set with lateral scanning we can also derive a function similar to (15) if we take into account certain characteristics of the operation of such sets.

It is known that in lateral scanning (or when the antenna is directed sideways) the number of pulses arriving from different objects does not remain constant but is dependent on the slant distance of these objects.

Nearby objects are illuminated by the set for a shorter time than distant objects.

It can be seen from Fig. 5 that object 1 is illuminated by the set for a length of time t_1:

$$t_1 = \frac{R_{n1} a_r}{v_{пут}}, \tag{16}$$

and object 2 is illuminated for

$$t_2 = \frac{R_{n2} a_r}{v_{пут}}, \tag{17}$$

where α_g is the width of the antenna diagram in a horizontal plane; v_{put} is the ground speed of the aircraft.

It follows from Formulas (16) and (17) that $t_2 > t_1$, since $R_{n2} > R_{n1}$.

Consequently, the number of pulses from the object depends on the slant distance to the object and is expressed by the formula

$$N_i = \frac{R_n \alpha_r}{v_{nyt}} \cdot F_i, \tag{18}$$

where F_i is the repetition frequency of the radar set.

Therefore the value of the visibility coefficient (11) for a radar set with lateral scanning will not remain constant but will depend on the distance.

The formula for the visibility coefficient may be written, on the basis of (18) and (11), as

$$V \sim \frac{A_1}{\sqrt{R_n}}, \tag{19}$$

where A_1 is a constant.

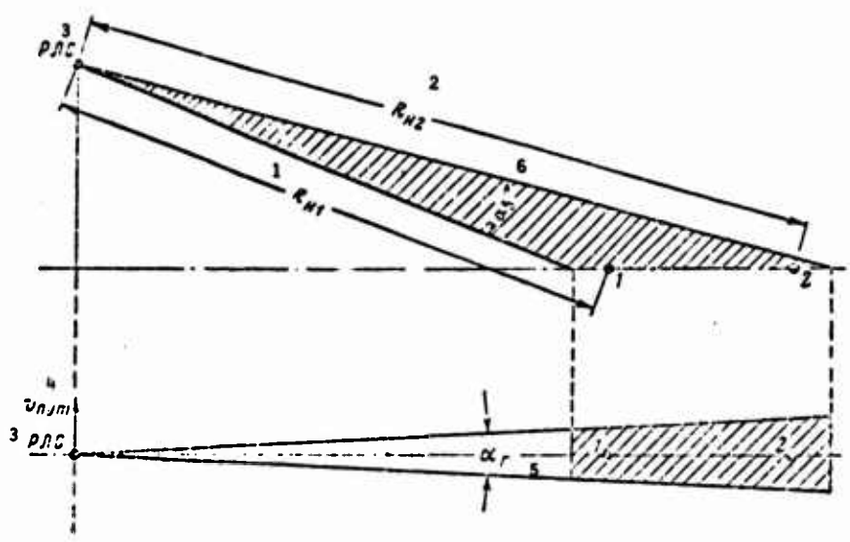

Fig. 5. Diagram of lateral sighting of objects 1 and 2 situated on the surface at different distances from the radar set. 1) R_{n1}; 2) R_{n2}; 3) radar set; 4) v_{put}; 5) α_g; 6) α_v.

In order to obtain an expression for Q for a radar set with lateral scanning, we substitute (19) into (4).

$$Q_2 = A\frac{1}{a_в^2}\cdot\frac{1}{R_н^4\cdot R_н^{1/2}} = A\frac{1}{a_в^2}\cdot\frac{1}{R_н^{7/2}}. \qquad (20)$$

When $\gamma = \gamma_1 = 0$, by analogy with (12), we obtain

$$Q_2 = A\frac{1}{(\operatorname{arctg} a)^2}\cdot\frac{\cos^{7/2} a_{n1}}{H^{7/2}} = \frac{A}{H^{7/2}}\cdot\frac{\sqrt{\cos^7(\operatorname{arctg} a)}}{(\operatorname{arctg} a)^2}. \qquad (21)$$

When $\gamma \neq 0$, the expression for Q is written in the form

$$Q_2 = \frac{A}{H^{7/2}}\cdot\frac{\sqrt{\cos^7[\operatorname{arctg}(\operatorname{tg}\gamma + a)]}}{[\operatorname{arctg}(\operatorname{tg}\gamma + a) - \gamma]^2}. \qquad (22)$$

After substituting the angle $\theta = 90° - \gamma$ for the angle γ in (22), we obtain

$$Q_2 = \frac{A}{H^{7/2}}\cdot\frac{\sqrt{\cos^7[\operatorname{arctg}(\operatorname{ctg}\theta + a)]}}{[\operatorname{arctg}(\operatorname{ctg}\theta + a) - 90° + \theta]^2}. \qquad (23)$$

The graphs plotted on the basis of Formula (23) for parameter values of $a = 10$ and $a = 0.25$ are shown in Figs. 3 and 4, together with the graphs of (15). The calculations using Formulas (15) and (23), necessary for the plotting of these graphs, were carried out by Engineer D.V. Terekhina.

* * *

The foregoing calculations show that in linear scanning the scanning of distant strips is most advantageous from the standpoint of energy. The strip spacing is limited by the design difficulties of constructing an antenna with a large aperture in the vertical plane.

The graphs shown in Figs. 3 and 4 make clear the energy advantages of lateral scanning.

Analogous calculations of the function $Q = f(\theta)$ for cases of targets with nonzero length, for the case in which $V \sim N_i^{-1}$, and also for cases in which the directional diagram used is such that the image of the strip is uniformly illuminated have shown that the laws illustrated in Figs. 3 and 4 remain valid. As an example, Figs. 3 and 4 show the variation of Q_3 for the case in which $V \sim N_i^{-1}$.

Calculations which take account of the curvature of the earth and attenuation in the atmosphere were not carried out. However, it may be assumed that the effect of taking account of the curvature of the earth will be to increase Q with decreasing θ (within the limits of straight-line visibility, of course), while taking account of attenuation in the atmosphere will hinder the increase of Q with decreasing θ.

Manu-script Page No.	Transliterated Symbols
1	пр = pr = priyemnik = receiver
1	н = n = naklonnaya = slant
1	в = v = vertikal'naya = vertical
2	г = g = gorizontal'naya = horizontal
3	ш = sh = shum = noise
6	пут = put = putevaya = ground

4. SIMULATION OF RANDOM NUMBERS ON AN ELECTRONIC DIGITAL COMPUTER

V.A. Likharev, Candidate of Technical Sciences,
Engineer L.V. Dobrolyubov, Engineer N.A. Kobzev

The article describes a procedure for obtaining a random sequence of numbers with a given distribution law by using uniformly distributed random numbers. It gives programs for generating the latter on the BESM-2M high-speed electronic computer. As examples, it describes the methods for obtaining uniform normal, exponential, Rayleigh, and generalized Rayleigh laws, as well as the results obtained by checking the correlation of the uniform distribution, the agreement of the normal distribution with a given distribution, and the estimation of numerical characteristics by the method of confidence intervals.

With the advent of electronic computers, the computation methods grouped under the general name of Monte Carlo methods are becoming more and more popular. Two tendencies have been observed in the application of these methods. In the first type of application, the abstract mathematical problem of solving a complicated equation is reduced to the investigation of an analogous random process described by the same relation. For example, this may involve a partial differential equation of the elliptic or parabolic type, an integral equation, or the calculation of a multiple integral. In the second type of application, a given random process is investigated by constructing a properly idealized mathematical model of it. In both types of problems the necessary characteristics of the random process under investigation are obtained statistically, and the required accuracy is achieved by increasing the number of trials.

This last fact explains why such calculation methods could come into use only after the appearance of electronic computers, since only such machines are capable of carrying out the random process under investigation a sufficiently large number of times.

With a sampled-data digital computer it is possible to study the value of the process at successive instants of time. For this purpose, it is necessary to obtain by means of an electronic computer a random sequence of numbers which obey some distribution law or some class of distribution laws.

The methods for obtaining random sequences of numbers which obey given distribution laws have been most fully discussed in

[1]. The normal distribution is of great importance in the solution of radar detection problems. Let us consider the method of obtaining normal numbers by means of electronic computers.

Suppose that it is required to obtain a sequence of random numbers $\{S_i\}$ which have a normal distribution with a mathematical expectation $m = 0$ and a variance $\sigma^2 = 1$,

$$f_1(x) = \frac{1}{\sqrt{2\pi}\,\sigma} e^{-\frac{x^2}{2\sigma^2}}. \tag{1}$$

According to the central limit theorem of the theory of probability, the sums of a large number of random terms will have a distribution which tends asymptotically to the normal distribution if certain very general conditions are satisfied. Therefore an approximate simulation of normally distributed random numbers may be obtained by summing the numbers of an initial sequence. It is convenient to use quasiuniform pseudorandom numbers, obtained by a programing method, as the initial sequence.

A program for obtaining quasiuniform random numbers is described in [2].

However, the interval of aperiodicity in a sequence of numbers obtained by means of this program does not exceed 50,000, which may be insufficient for the solution of a number of problems. In addition, this program consists of four commands, and this leads to considerable waste of machine time when the operations must be repeated a large number of times. For this reason, the program we used as the initial-sequence program was one proposed by A.I. Sragovich, a scientific staff member at the Computing Center of the Academy of Sciences of the USSR (see Appendix).

A characteristic of this program is the fact that, first of all, it consists of three commands and, secondly, that its interval of aperiodicity is more than $3 \cdot 10^6$. The numbers obtained by means of this program are uniformly distributed over the interval (-1, +1).

The basic requirement for such a sequence of numbers is that there must be a low statistical correlation between its numbers. The lack of correlation was verified as follows. We calculated the correlation moments of the sequence by means of the formula

$$Q_l = \frac{\frac{1}{n-l}\sum_{k=1}^{n-l}[x_k - \bar{x}][x_{k+l} - \bar{x}]}{\frac{1}{n}\sum_{k=1}^{n} x_k^2 - \left(\frac{1}{n}\sum_{k=1}^{n} x_k\right)^2}, \tag{2}$$

where n is the number of terms of the sequence; l is the number of calculated points; $\bar{x} = \frac{1}{n}\sum_{k=1}^{n} x_k$ is the mathematical expectation of the statistical series; x_k are the values of the terms of the sta-

tistical series. The values of the correlation moments calculated according to Formula (2) are shown in Table 1.

TABLE 1

l	ϱ_l	l	ϱ_l
0	1,000000000	6	−0,029306802
1	0,024834369	7	−0,025279736
2	−0,037379679	8	−0,0044158248
3	−0,027280937	9	−0,025902692
4	−0,037787475	10	−0,016323434
5	−0,025829599		

The check showed that the correlation properties of the uniform numbers do not change over the block of numbers from 0 to $3 \cdot 10^6$.

In order to obtain normal numbers from the initial uniform sequence, we form the normalized sum

$$h = k \sum_{i=1}^{n} \xi_i, \tag{3}$$

where k is a proportionality factor introduced in order to normalize the variance $\sigma^2 = 1$; ξ_i are the uniformly distributed numbers; n is the number of terms.

It can be shown that h has a nearly normal distribution even for relatively small values of n. In the present case $n = 5$.

As was shown in [4], in order to improve the asymptotic normality of h, it is possible to use special transformations. For example, the quantity

$$\xi^* = h - \frac{1}{20n}(3h - h^3) \tag{4}$$

will have a distribution sufficiently close to the normal distribution for much smaller values of n than in the case of simple summation.

A standard program for obtaining normal numbers, based on a uniform distribution and making use of Formulas (3) and (4), is given in the Appendix.

The t criterion [3] was used to determine whether the normal numbers were uncorrelated. In the present case this criterion is expressible by the formula

$$t = \frac{\varrho_1}{\sqrt{1 - \varrho_1^2}} \sqrt{n - 2}, \tag{5}$$

where ρ_1 is the first correlation moment of the normal numbers.

The value of ρ_1, calculated for a block of 10^9 numbers, was found to be

$$\rho_1 = 0{,}0042959261.$$

If the value of t obtained by means of Formula (5) exceeds the tabulated value corresponding to the assumed significance level, then the assumption that the random numbers in their entirety are uncorrelated is incorrect. In the case of a 5% significance level for the sequence under investigation

$$t = 0.136$$

and the probability p of finding $t > 0.136$ is greater than 5%. Consequently, this sequence of normal numbers may be considered uncorrelated.

In order to estimate the agreement between the experimental and theoretical distributions, we investigated the resulting number sequence by means of Pearson's χ^2 criterion.

The number sequence, consisting of 10^6 normal numbers, was divided into 10 segments. In each segment we took the first 10^4 normal numbers and plotted a histogram, calculated χ^2, and calculated m_e and σ_e^2 for these. The results of the calculations are shown in Table 2.

TABLE 2

№ участка [1]	$m_э$	$\sigma_э^2$	χ^2	Расхождение эксперимент. и теоретич. распр. [2]
1	0,0009335	0,31931240	24,378	случайное [3]
2	−0,0024426	0,32443262	25,99	случайное [3]
3	−0,0029806	0,31925377	27,3115	случайное [3]
4	−0,0053246	0,32229400	36,911	случайное [3]
5	−0,0002088	0,32151874	22,14	случайное [3]
6	0,00001837	0,32286972	24,675	случайное [3]
7	−0,0038727	0,31776674	31,435	случайное [3]
8	−0,0161672	0,31574532	36,138	случайное [3]
9	0,0024483	0,31978057	44,93	существенное [4]
10	0,0034752	0,31989569	42,725	существенное [4]

1) Number of segment; 2) difference between experimental and theoretical distributions; 3) random; 4) substantial.

Figure 1 shows a histogram of the first 10^4 normal numbers, together with a graph of the theoretical distribution. Here v_i is the number of normal numbers in the ith segment of the histogram.

In estimating the agreement between the theoretical and experimental distributions, we used a formula from [3]. If

$$\frac{|\chi^2 - \nu|}{\sqrt{2\nu}} \geqslant 3, \tag{6}$$

the difference may be considered substantial; if, on the other hand,

$$\frac{|\chi^2 - \nu|}{\sqrt{2\nu}} < 3, \tag{7}$$

where $\nu = r - 1 = 19$, r is the number of segments in the histogram, the difference may be considered random, i.e., in our case,

$$\chi^2_{\text{критич}} < 37.$$

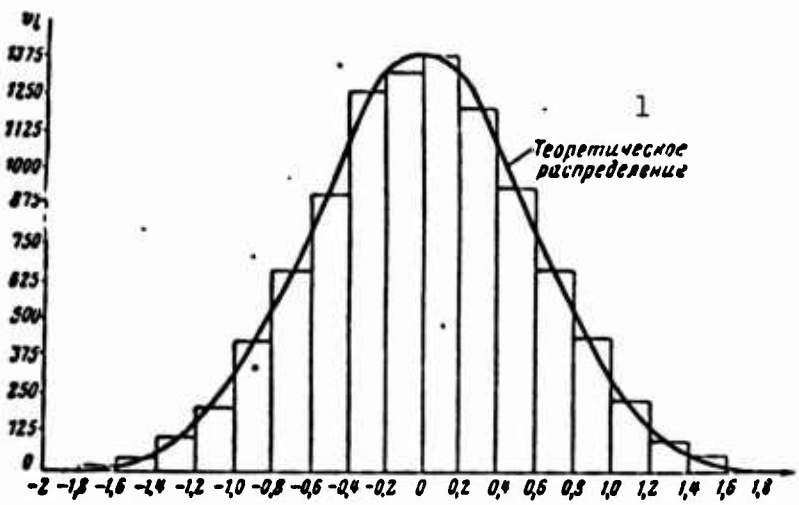

Fig. 1. Histogram of the normal distribution law: v_i is the number of normal numbers in the ith segment of the histogram. 1) Theoretical distribution.

As can be seen from Table 2, a substantial difference on the basis of the χ^2 criterion is obtained at the end of a normally distributed number sequence consisting of 10^6 numbers, which limits the range of numbers used to $9 \cdot 10^5$ numbers.

In order to estimate the agreement between the experimental and theoretical numerical characteristics of the normal distribution, we used the method of confidence intervals. Selecting a significance level of 1%, we obtain the following formulas for the boundaries of the confidence intervals (see [5]):

$$m_т - 2{,}58\sigma_m \leqslant m_э \leqslant m_т + 2{,}58\sigma_m, \tag{8}$$

where

$$\sigma_m = \frac{\sigma_т}{\sqrt{n}}.$$

In the present case, for $\sigma_т = \frac{1}{\sqrt{3}}$, $m_т = 0$ and $n = 10^4$, we have

$$-0{,}0147 \leqslant m_э \leqslant 0{,}0147.$$

The confidence interval for a σ_e with the same level of reliability is defined as

$$\sigma_т - 2{,}58\sigma_e \leqslant \sigma_э \leqslant \sigma_т + 2{,}58\sigma_e, \tag{9}$$

where

$$\sigma_e = \frac{\sigma_т^2}{n}\sqrt{2(n-1)}.$$

In the present case, for $\sigma_т = \frac{1}{\sqrt{3}}$ and $n = 10^4$, we have $0.5583 \leq \sigma_e \leq$ ≤ 0.5817. A check over all 10 segments showed that the mathematical expectation m and the variance σ^2 lie within the 99% confidence interval.

The normal distribution law may be used to obtain other distribution laws which are important in the solution of radar detection problems. The Appendix gives programs for obtaining exponential, Rayleigh, and generalized Rayleigh distributions. Each of these three programs includes the conversion to a standard program of normal numbers. The exponential distribution is obtained from the normal distribution by the following formula:

$$\xi_{экс} = \xi^2_{1норм} + \xi^2_{2норм}. \tag{10}$$

The formula for the Rayleigh distribution is

$$\xi_{рел} = \sqrt{\xi^2_{1норм} + \xi^2_{2норм}}. \tag{11}$$

The generalized Rayleigh distribution is obtained from the normal distribution by means of the formula

$$\xi_{о.р} = \sqrt{(\xi_{1норм} + a)^2 + \xi^2_{2норм}}, \tag{12}$$

where a is a constant.

In order to verify the quality of the resulting normal sequence of numbers, we solved the problem of detecting a nonfluctuating target. For a packet of 10 pulses and a false-alarm probability of $F = 10^{-6}$ we obtained three values of the probability of correct detection, D, corresponding to three different signal-to-noise ratios. The results of the calculations are shown in Fig. 2. This figure also shows the curve obtained by calculation in [6].

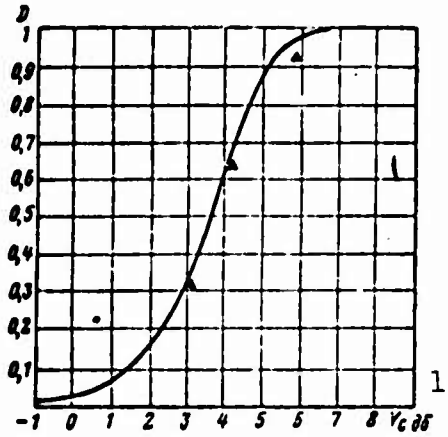

Fig. 2. Probability of detection of a packet of nonfluctuating signals. The curve was calculated for the parameters: $n = 10$, $F = 10^{-6}$; ▲) points calculated on the BESM-2M. 1) U_s, db.

* * *

The standard program for normal numbers makes it possible to obtain uncorrelated normal numbers with a variance $\sigma^2 = 1$ and a mathematical expectation $m = 0$ and may be recommended for use with the BESM-2M high-speed electronic computer.

The programs proposed in the present study for obtaining exponential, Rayleigh, and generalized Rayleigh distributions make it possible to solve a number of radar detection problems.

APPENDIX

1. Standard program for obtaining normal numbers.

Access to the program is provided by V.M. Kurochkin's compiler program by the command

77 0000 0151 3777.

The result – the normal number – is found in cell 0002. This standard program can operate only with the compiler program.

2. Standard program for obtaining exponential numbers.

Access to the program is provided by the command

34 0000 0027 0020.

The program occupies cells 0020 to 0030.

The quantity $y = q + 1$, where $q^2 = \sigma_s^2/\sigma_{sh}^2$ is transferred to cell 0003; σ_s^2 is the variance of the signal and σ_{sh}^2 is the variance of the noise.

The result is found in cell 0004. When the quantity $y = 1$ is sent to cell 0003, the result obtained is a sequence of exponential numbers which imitate the noise voltages at the output of the square-law detector. When a quantity $y > 1$ is sent to cell 0003, the result obtained is a sequence of numbers which imitate the voltages of the signal together with the noise at the output of the square-law detector for independent fluctuations of the signals reflected from the target.

3. Standard program for obtaining Rayleigh numbers.

Access to the program is provided by the command

34 0000 0031 0020.

The program occupies cells 0020 to 0032. This standard program differs from the previous one only in the fact that it imitates the voltages of the noise (when $y = 1$) or of the signal together with the noise (when $y > 1$) at the output of the linear detector for independent fluctuations of the signals reflected from the target.

The quantity $y = q + 1$ is sent to cell 0003, and the result is found in cell 0004.

4. Standard program for obtaining generalized Rayleigh numbers.

Access to the program is provided by the command

34 0000 0034 0020.

The program occupies cells 0020 to 0036.

The quantity $a = u_s/\sqrt{2}\sigma_{sh}$ is sent to cell 0003. The result is found in cell 0004. When the quantity $a = 0$ is sent to cell 0003, the result obtained is a sequence of Rayleigh numbers, and when a quantity $a > 0$ is sent to cell 0003, the result obtained is a sequence of numbers distributed according to the generalized Rayleigh law and imitating the voltages of the signal together with the noise at the output of the linear detector for reflection from a nonfluctuating target.

Remark. In the last three programs, exit from the program takes place upon the command which follows the program access command.

1 СП получения нормальных чисел						
1777	70	1631	0440	1741	Дополнение до $k\Sigma$ 2	
2000				0016		1
1	14		0005	0006		2
2	43	2024	2025	0001		3
3	26	2024	0020	0002	3 Датчик равномерных чисел*	4
4	22	0001	0002	2024		5
5	01	2024	0005	0005		6
6	22	0006	2017	0006		7
7	36	0006	2020	2002		8
2010	03	0005	2023	0005		9
1	03	0005	0005	0001		10
2	03	0001	0005	0001		11
3	03	2022	0005	0002		12
4	02	0002	0001	0002		2
5	04	0002	2021	0002		2
6	02	0005	0002	0002		3
7	37			0001		4
2020				0005		5
1	07	1440				6
2	02	1400				7
3	00	1450	3656	0244		8
4		1252	1252	1252	4 Константы для датчика равномерных чисел	9
5		0002		0200		10
6						11
7						12

*Commands 2002, 2003, 2004 constitute A.I. Sragovich's uniform-number generator.

1) Standard program for obtaining normal numbers; 2) supplement to $k\Sigma$; 3) uniform-number generator*; 4) constants for uniform-number generator.

	1 СП получения экспоненциальных чисел					
0020				0007		1
1	77		0151	3777		2
2	03	0002	0002	0002		3
3	01	0002	0007	0007		4
4	74		0024	0021		5
5	03	0007	0003	0004		6
6		0030		0024		7
7	00					8
0030	74		0024	0021		9

1) Standard program for obtaining exponential numbers.

	1 СП получения релеевских чисел					
0020				0007		
1	77		0151	3777		2
2	03	0002	0002	0002		3
3	01	0002	0007	0007		4
4	74		0024	0021		5
5		0007		0001		6
6	77		0011	3777		7
7	03	0002	0003	0004		8
0030		0032		0024		9
1	00					10
2	74		0024	0021		11
3						12

1) Standard program for obtaining Rayleigh numbers.

5. Kramer, G., Matematicheskiye metody statistiki [Mathematical Methods of Statistics]. I.L., 1948.

6. Golev, K.V., Raschet dal'nosti deystviya radiolokatsionnykh stantsiy [Calculation of the Operating Range of Radar Stations], "Sovetskoye radio," Moscow, 1962.

Manuscript Page No.	Transliterated Symbols
13	э = e = eksperimental'noye = experimental
14	критич = kritich = kritichnyy = critical
14	т = t = teoreticheskoye = theoretical
15	эксп = eksp = eksponentsial'noye = exponential
15	норм = norm = normal'noye = normal
15	рел = rel = releyevskoye = Rayleigh
15	о.р = o.r = obobshchenno releyevskoye = generalized Rayleigh
16	у = U = uroven' = level
16	с = s = signal = signal
16	ш = sh = shum = noise

8. EFFICIENCY OF COHERENT RADAR IN THE RECEPTION OF PARTIALLY COHERENT PACKETS

Engineer I.M. Miroshnichenko

The present study determines the loss at the threshold signal-to-noise ratio of a coherent radar in the reception of a packet signal with a frequency different from the fixed tuning frequencies of the Doppler channels or with a frequency which varies at a constant rate.

The article gives formulas and graphs by means of which it is possible to select the radar parameters rationally and also to determine the requirements for the stability of the apparatus, starting from given losses and probabilities of errors (misses and false alarms) for coherent and coherent-noncoherent treatment.

A great many published studies have been devoted to the coherent detection of a radar signal, but in general these studies either did not take phase fluctuations into consideration or else treated them in ways which required the use of a complicated mathematical apparatus [5].

The treatment of cases of regular variation of a Doppler frequency in the present study has made it possible to compare the efficiencies of coherent and noncoherent reception of partially coherent packets in a fairly simple manner and to formulate the requirements for the stability of the phase-determining elements of the apparatus.

The use of coherent accumulation of packet pulses in ground-based and airborne radar sets makes it possible, as is known, to detect targets at much greater distances. The coherent accumulation is carried out by means of a comb filter which is placed in front of the detector and whose construction (in the optimum variant) involves equal-weight summation of the packet pulses by means of a set of delay lines [1]. In practice a quasioptimal accumulator is used on one delay line, and the losses are small, but they increase as the number of packet pulses increases.

The advantage of a threshold signal-to-noise ratio in a coherent optimal accumulator (which sums all the pulses of a packet with equal weights) increases with the number of pulses. From the viewpoint of spectral representations, this means that the pass-

band of the teeth of the comb filter correspondingly decreases.

However, as the number of pulses in a packet increases, various factors which lead to a gradual loss of coherence come into play.

The coherent treatment of a pulse packet is optimal for a coherent packet against a background of Gaussian white noise, i.e., a packet of pulses whose initial phase varies linearly as a function of the number of pulses.

The derivative of the phase with respect to time is the Doppler frequency corresponding to the radial component of the target velocity with respect to the radar set. Since the target velocity is unknown, a coherent system consists of a set of channels M which accumulate pulses for fixed Doppler frequencies. For frequencies different from these fixed values, coherent treatment will result in some loss of the signal energy. If the velocity vectors of the target and the radar set do not lie on the same straight line, the frequency of the reflected signal will vary with time, and the relation between the initial phase of a pulse and its number will be nonlinear. Consequently, losses in a coherent system also arise as a result of failing to take account of relative accelerations of the target motion.

The destabilizing factors disturbing the coherence of the reflected packet of pulses also include the "blinking" of the target, i.e., amplitude and phase fluctuation of the signal as a result of vibration and change of orientation of the target, which will usually be of fairly complicated form, and, finally, instability of the radar set itself. All of this results in a spread of the spectral components of the signal and complicates the statistical properties of the signal-noise mixture. A coherent treatment of such a partially coherent packet is no longer optimal and leads to an increase in the threshold signal-to-noise ratio as the number of pulses in the packet increases (if we continue to narrow the teeth of the comb filter).

Since the signal energy losses are found to be quite considerable, especially for high target velocities, we must make a careful examination of the efficiency of coherent systems and work out recommendations for the selection of their fundamental parameters. The results obtained will, of course, also apply to coherent filter systems [2].

From this point on we shall assume that there is an optimal system for detecting a coherent packet of a signal with an unknown (random and equiprobable) initial phase against a background of Gaussian white noise with two squaring channels [3], [5].

We assume that the radar set emits a sequence of coherent pulses (or has a coherent heterodyne oscillator phased by the transmitter) and scans the space in some sector with a narrow beam. Assuming that the target moves in a straight line with a constant velocity W with respect to the radar set, we shall denote the distance between them by $R(t)$ and the angle between the radius vector from the target to the radar set and the velocity vector W

by θ.

As the target moves during the time it passes through the antenna beam, the coherence of the reflected packet of pulses is disturbed. In a manner analogous to what was done in [4], we shall expand the function $R(t)$ during the period of observation into a power series in $t - t_0$ (where t_0 is the start of the observation)

$$R(t)=R(t_0)+(t-t_0)R'(t_0)+\frac{1}{2}(t-t_0)^2R''(t_0)+\ldots,$$

where

$$R'(t_0)=W\cos\theta;$$

$$R''(t_0)=\frac{W^2}{R}\sin^2\theta.$$

Accordingly, the initial phase of the reflected signal will have the form

$$\varphi_д(t)=\frac{4\pi W}{\lambda}\cos\theta\cdot(t-t_0)+\frac{2\pi W^2}{\lambda R}\sin^2\theta\cdot(t-t_0)^2\ldots \qquad (1)$$

(where terms of higher than second order in the above series are neglected). The second term is obviously the parasitic displacement of the initial phase which leads to loss of coherence. Taking account of the packet structure of the reflected signal, we write the expression for the parasitic phase displacement of the kth pulse in the form

$$\varphi_k=ak^2,$$

where

$$a=\frac{2\pi W^2T_п^2}{\lambda R}\sin^2\theta.$$

The coefficient a determines the displacement of the initial phase between the first ($k = 0$) and the second ($k = 1$) pulses of the packet and depends not only on the course of the radar set and the target, the velocities, the difference between their altitudes, and the target distance, but also on the parameters of the radar set, λ and T_p. The parasitic displacement of the Doppler frequency is of the form

$$F_д=\frac{at}{\pi T_п^2}.$$

The value of the coefficient a and the corresponding rate of change of the Doppler frequency, $dF_д/dt$, for a few particular cases are shown in Table 1 [8].

Let us consider the radial motion of the target when the Doppler frequency is different from the fixed frequency values to which the Doppler channels are tuned. In this case we may assume that the kth pulse of the reflected packet has an initial-phase

displacement φ_{kl}, which is due to the difference between the frequencies of the reflected signal and the nearest channel. For a frequency midway between the frequencies of two adjacent channels, the phase value φ_{kl} will be maximum. Let us consider this case. Let the range of Doppler frequencies be ΔF_d and let the number of channels be M. Then the frequency which falls midway between channels m and $m + 1$ is

$$F_\lambda = \frac{\Delta F_\lambda}{M}\left(m + \frac{1}{2}\right), \qquad (2)$$

where m is the number of the channel, $m = 0, 1, 2 \ldots M$, and its difference from the channel frequencies is

$$F'_\lambda = \frac{\Delta F_\lambda}{2M}.$$

To this Doppler frequency will correspond a displacement of the initial phase of the kth pulse which is not compensated in the channel,

$$\varphi_{kl} = bk, \qquad (3)$$

where

$$b = \frac{2\pi \Delta W T_n}{\lambda M},$$

ΔW is the range of target velocities.

Table 2 gives the values of b for a few particular cases. (The physical meaning of the coefficient b is the displacement of the initial phase from pulse to pulse.)

In the general case of relative motion of the radar set and the target, the phase of the kth pulse is determined on the basis of (1) as

$$\varphi_k = bk + ak^2. \qquad (4)$$

In order to simplify the picture, let us subdivide the general case into two simple cases, each corresponding to one term of this expression.

The first case [described by the first term of the expression (4)] is a radial displacement of the target, where the Doppler frequency lies midway between two channels and is described by the expression (2).

The second case (described by the second term) is a nonradial motion with an initial frequency value matching one of the channels, e.g., channel m.

After determining the losses at the threshold signal-to-noise ratio for each of these cases individually, we can easily turn to

TABLE 1

Расстояние 1	R	км 8	25	25	25	5
Угол 2	θ	град 9	90°	90°	11°	90°
Длина волны 3	λ	мм 10	30	8	8	30
Период повторения 4	$T_п$	мксек 11	500	500	500	500
Скорость 5	W	м/сек 12	400	400	400	400
Коэффициент 6	a	град 9	$1,8\cdot10^{-2}$	$1,8\cdot10^{-2}$	$2,2\cdot10^{-3}$	10^{-1}
		рад 13	$33\cdot10^{-4}$	$8,4\cdot10^{-4}$	$4\cdot10^{-5}$	$1,75\cdot10^{-3}$
Скорость изменения частоты 7	$\frac{df_д}{dt_{15}}$	$\frac{гц}{сек}$ 14	420	1070	50	2440

1) Distance; 2) angle; 3) wavelength; 4) period of repetition; 5) velocity; 6) coefficient; 7) rate of change of frequency; 8) km; 9) degrees; 10) mm; 11) μsec; 12) m/sec; 13) radians; 14) hz/sec; 15) dF_d/dt; 16) T_p.

TABLE 2

Длина волны 1	λ	см 7	3	3	3	3
Число каналов 2	M		100	200	500	1000
Диапазон скоростей 3	ΔW	м/сек 8	400	400	400	400
Период повторения 4	$T_п$ 14	мксек 9	500	500	500	500
Коэффициент 5	b	град 10	21	12	4,6	2,3
		рад 11	0,42	0,21	0,08	0,04
Частоты 6	$F'_д$ 13	гц 12	133	67	27	13,3

1) Wavelength; 2) number of channels; 3) range of velocities; 4) period of repetition; 5) coefficient; 6) frequencies; 7) cm; 8) m/sec; 9) μsec; 10) degrees; 11) radians; 12) hz; 13) F'_d; 14) T_p.

a consideration of the more general picture of relative motion of the target with respect to the radar set.

To determine the loss at the threshold signal-to-noise ratio in coherent treatment of partially coherent packets, we can use the following method. A packet of partially coherent pulses with an arbitrary envelope can be reduced under certain conditions to an equivalent coherent packet with the same number of pulses and a rectangular envelope, with some effective signal level. For this reason it seems possible to use the theory of optimal treatment methods worked out for such a packet. In particular, it is possible to use formulas and graphs for the probabilities of correct detection and of a false alarm. For this purpose, we must obviously have an equivalent packet at the output of the apparatus under consideration with exactly the same statistical properties (multidimensional distribution law or characteristic function) as the original packet. For the sake of simplicity, we shall consider rectangular pulse packets which fluctuate in unison. Let us find first of all the voltage at the output of the intermediate-frequency amplifier, regarding it as an optimal filter for each individual pulse. Let

$$u_{1k} = V_{mk} \cos(\omega_0 t + \alpha),$$
$$kT_{\text{п}} \leqslant t \leqslant kT_{\text{п}} + \tau,$$

the signal of the kth pulse of a pure coherent packet with a random and equiprobable phase α at the input of the receiver.

Let us write the expression for the signal of the kth pulse of a partially coherent packet at the input of the receiver in the form

$$u''_{1k} = V_{mk} \cos(\omega_0 t + \psi_k + \alpha),$$

where we use ψ_k to denote the initial phase, which we shall assume to be equal to φ_{k1} in the first case under consideration and φ_k in the second case.

We assume that the condition

$$\tau = n \frac{2\pi}{\omega_0},$$

where τ is the duration of the pulse; ω_0 is the (intermediate) filling frequency; n is an integer, is satisfied.

Such a mathematical model presupposes that for sufficiently short pulses the Doppler effect will be manifested only in the change of the initial phase of the pulses.

After filtering, these signals at time $t = \tau$ will be equal, respectively, to

$$u_{2k} = \frac{cV_{mk}}{G_0} \int_0^{\tau} u_{1k}(t) \cos \omega_0 t \, dt = \frac{cV_{mk}^2 \tau}{2G_0} \cos \alpha = \frac{cE}{G_0} \cos \alpha;$$

$$u^*_{2k} = \frac{cV_{m2}}{G_0} \int_{\frac{\psi_k}{\omega_0}}^{\tau} u_{1k}\left(t - \frac{\psi_k}{\omega_0}\right) \cos \omega_0 t dt = \frac{cE}{G_0}\left(1 - \frac{\psi_k}{\omega_0 \tau}\right) \cos(a + \psi_k),$$

where G_0 is the density of the energy spectrum of the noise; E is the energy of an individual signal pulse; ω_0, ω_v are the intermediate and high circular frequencies; c is a dimensionality coefficient.

After the intermediate-frequency amplifier the signal and the noise go to two squarers which have synchronized detectors, accumulators, and squarers, after which the voltages of the two channels are added. Nonlinear operations – extraction of the square root and ln $I_0(z)$ – are performed on the sum, and this is followed by the threshold apparatus. We find the signals at the output of the linear part of the system.

After the synchronized detectors and accumulators in the squaring channels the signals u_{2k} and u^*_{2k} are equal, respectively, to:

$$u_3 = N \cdot \frac{cE}{G_0} \cos a$$

$$V_3 = N \frac{cE}{G_0} \sin a,$$

where N is the number of pulses in the packet; u, V are the voltages in the first and second squaring channels;

$$u^*_3 = \frac{cE}{G_0} \sum_{k=1}^{N} \left(1 - \frac{\psi_k}{\omega_0 \tau}\right) \cos(a + \psi_k) \approx \frac{cE}{G_0} \sum_{k=1}^{N} \cos(a + \psi_k);$$

$$v^*_3 = \frac{cE}{G_0} \sum_{k=1}^{N} \left(1 - \frac{\psi_k}{\omega_0 \tau}\right) \sin(a + \psi_k) \approx \frac{cE}{G_0} \sum_{k=1}^{N} \sin(a + \psi_k).$$

After squaring the voltage in each of the squaring channels, adding, and taking the square root, we find the envelope under which the operation ln $I_0(z)$ is carried out. If we equate the envelopes of the oscillations at the outputs of the accumulators of the coherent and partially coherent packets, the distribution laws for these two packets will be equal, and consequently, so will the probabilities of error after optimal-system treatment. Therefore the effective signal level must be found from the conditions of equality of the envelope.

The expressions for the envelope of the coherent and partially coherent packets against a noise background at time $t = \tau$ are written, respectively, in the forms [6]

$$V_1 = \sqrt{\left[A(\tau) + \frac{cE}{G_0} N \cos a\right]^2 + \left[B(\tau) + \frac{cE}{G_0} N \sin a\right]^2};$$

$$V_2 = \sqrt{\left[A(\tau) + \frac{cE}{G_0}\sum_{k=1}^{N}\cos(\alpha+\psi_k)\right]^2 + \left[B(\tau) + \frac{cE}{G_0}\sum_{k=1}^{N}\sin(\alpha+\psi_k)\right]^2},$$

where $A(\tau)$, $B(\tau)$ are independent Gaussian functions with a correlation coefficient $\rho(\tau)$ and a variance σ (noise voltage). If we introduce the notation

$$x = \frac{V}{\sigma};\ a = \frac{A(\tau)}{\sigma};\ b = \frac{B(\tau)}{\sigma};\ \sqrt{\bar{q}} = \frac{cE}{G_0\sigma},$$

then the above formulas can be rewritten as

$$x_1 = \sqrt{[a + \sqrt{\bar{q}}N\cos\alpha]^2 + [b + \sqrt{\bar{q}}N\sin\alpha]^2};$$

$$x_2 = \sqrt{\left[a + \sqrt{\bar{q}}\sum_{k=1}^{N}\cos(\alpha+\psi_k)\right]^2 + \left[b + \sqrt{\bar{q}}\sum_{k=1}^{N}\sin(\alpha+\psi_k)\right]^2},$$

equating x_1 and x_2 and passing to the effective signal-to-noise ratio of a coherent packet q_e, we obtain the following conditions:

$$\sqrt{\bar{q}}N\cos\alpha = \sqrt{\bar{q}_э}\sum_{k=1}^{N}\cos(\alpha+\psi_k);$$

$$\sqrt{\bar{q}}N\sin\alpha = \sqrt{\bar{q}_э}\sum_{k=1}^{N}\sin(\alpha+\psi_k).$$

Eliminating the parameter α and assuming that the signal-to-noise ratios are threshold values, we obtain the final expression

$$q_{э\,пор} = \frac{1}{\gamma^2}q_{п.пор}, \tag{5}$$

where

$$\gamma = \frac{1}{N}\sqrt{\left(\sum_{k=1}^{N}\cos\psi_k\right)^2 + \left(\sum_{k=1}^{N}\sin\psi_k\right)^2}.$$

For the first case of target motion under consideration, we have $\psi_k = \varphi_{k1}$.

For sufficiently large values of N we can replace the summation sign with an integral sign. After some fairly simple transformations, we obtain the expression

$$\gamma = \frac{\sin\frac{bN}{2}}{\frac{bN}{2}}. \tag{6}$$

If the initial phase of the signal is known ($\alpha = 0$), we obtain

$$\gamma = \frac{\sin bN}{bN}.$$

For the second case $\psi_k = \varphi_k$. In an analogous manner, we can obtain

$$\gamma = \frac{1}{N}\sqrt{\frac{\pi}{2a}}\sqrt{C^2(aN^2)+S^2(aN^2)}, \qquad (7)$$

where $C(aN^2)$ and $S(aN^2)$ are Fresnel integrals.

For a signal with a known initial phase ($\alpha = 0$), in this formula and the succeeding formulas, the second term under the square root sign must be set equal to zero.

The curves plotted in accordance with Formula (6) for three values of b: $b_1 = 0.21$; $b_2 = 0.08$ and $b_3 = 0.04$ radians, in accordance with Table 2, are shown in Fig. 1.

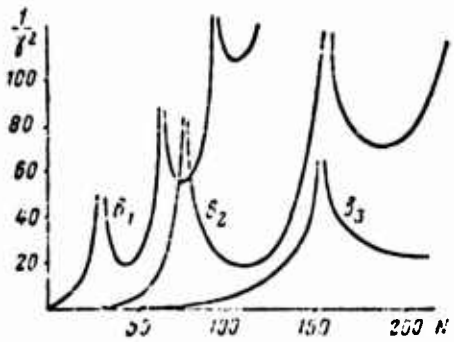

Fig. 1. Loss coefficient as a function of the number of pulses in the packet when the target moves radially.

The curves plotted in accordance with Formula (7) for three values of a: $a_1 = 1.75\cdot10^{-3}$, $a_2 = 3\cdot10^{-4}$ and $a_3 = 4\cdot10^{-5}$ radians, in accordance with Table 1, are shown in Fig. 2.

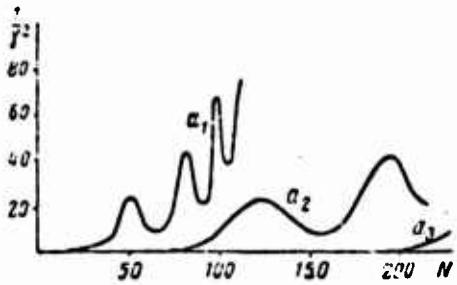

Fig. 2. Loss coefficient as a function of the number of pulses in the packet when the target moves nonradially.

Now, in order to plot the desired characteristics of Figs. 3 and 4, we can use the graphs given in [7], which give the relation between the probabilities of error P_{pr} and $P_{l.t}$ for different threshold signal-to-noise ratios in an optimal detection system for a packet of coherent pulses with phases fluctuating in unison, as well as Kaplan's formula, as corrected in [3], for an optimal detection system for packets of incoherent pulses.

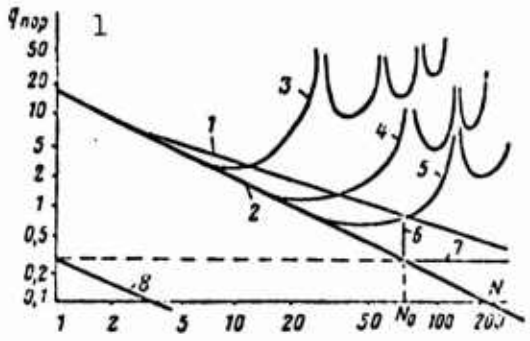

Fig. 3. Threshold signal-to-noise ratio as a function of the number of pulses in the packet when the target moves radially. 1) q_{por}.

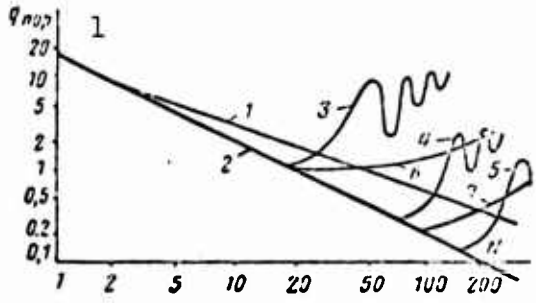

Fig. 4. Threshold signal-to-noise ratio as a function of the number of pulses in the packet when the targest moves nonradially. 1) q_{por}.

It is shown in [3] that for low error probabilities there exists an approximate relation (with an error of 0.5 db) between the $P_{p.r}$, $P_{l.t}$, and q_{por} of a coherent packet:

$$q_{пор}N = \left(\sqrt{\ln\frac{1}{P_{л.т}}} + \sqrt{\ln\frac{1}{P_{пр}} - 1{,}4}\right)^2.$$

This characteristic is represented in Figs. 3 and 4 by curve 2. For comparison, these figures also show the characteristic (curve 1) for incoherent treatment of the packets (plotted accord-

ing to Kaplan's formula). Curves 3, 4, and 5 (Figs. 3 and 4) for coherent treatment of partially coherent packets are plotted on the basis of Figs. 1 and 2 and Formula (5), with the curves of Fig. 3 corresponding to the curves of Fig. 1 and the curves of Fig. 4 corresponding to the curves of Fig. 2. In general, the curves of Figs. 3 and 4 are similar. As the number of pulses in the packet increases, the efficiency of coherent treatment rapidly decreases if we do not take account of the relative acceleration of the target or if we use an insufficient number of Doppler channels.

Physically this is explained by the fact that as N increases, the parasitic displacement of the initial phase also increases from pulse to pulse. The accumulation of such out-of-phase pulses leads to inevitable losses in signal energy, while the noise power continues to increase with increasing N. For a linear displacement of the initial phase (Figs. 1, 3) it is possible to compensate for the accumulated pulses almost completely, and therefore the maxima of the curves of Figs. 1 and 3 may be large.

In considering the second case of target displacement we assumed that the initial value of the Doppler frequency (of the received packet) corresponds to channel m and that its variation causes a loss of signal energy in this same channel. However, as the duration of the packet increases, the maximum value of the accumulated voltage passes from channel m to channel $m + 1$, then to channel $m + 2$, and so on.

The loss of signal energy will increase, but not as fast as in channel m. We must therefore determine what is the loss in channel m when the initial value of the Doppler frequency falls into I channel [sic].

In the notation of Formula (4) the initial phase of the kth pulse in channel m is

$$\varphi_{km} = 2bkm - ak^2.$$

For large values of N

$$\gamma(\varphi_m) = \frac{1}{\sqrt{aN}} \sqrt{\left[\int_0^{\sqrt{aN}} \cos\left(x^2 - \frac{2mb}{\sqrt{a}} x\right) dx\right]^2 + \left[\int_0^{\sqrt{aN}} \sin\left(x^2 - \frac{2mb}{\sqrt{a}} x\right) dx\right]^2}.$$

After some fairly simple transformations, we can reduce this expression to the form

$$\gamma(\varphi_m) = \frac{1}{N} \sqrt{\frac{\pi}{2a}} \sqrt{\left\{\cos\frac{m^2b^2}{a}\left[C\left(\frac{m^2b^2}{a}\right) + C\left(\sqrt{a}N - \frac{mb}{\sqrt{a}}\right)\right] + \sin\frac{m^2b^2}{a}\left[S\left(\frac{m^2b^2}{a}\right) + S\left(\sqrt{a}N - \frac{mb}{\sqrt{a}}\right)\right]\right\}^2 + \left\{\cos\frac{m^2b^2}{a}\left[S\left(\sqrt{a}N + \frac{mb}{\sqrt{a}}\right) - S\left(\frac{m^2b^2}{a}\right)\right] - \sin\frac{m^2b^2}{a}\left[C\left(\sqrt{a}N - \frac{mb}{\sqrt{a}}\right) + C\left(\frac{m^2b^2}{a}\right)\right]\right\}^2}, \qquad (8)$$

where C and S are Fresnel integrals.

This makes it possible to determine the coefficient $\gamma(\ _m)$, and consequently also the threshold signal-to-noise ratio for each channel of a coherent system.

For example, curve 6 (Fig. 4) was plotted for the second channel ($m = 1$), with $b = 0.04$, $a = 1.75 \cdot 10^{-3}$ and $M = 1000$. However, when the number of channels is of the order of hundreds (and when their construction is optimum), it is possible to use curves 3, 4, and 5 of Fig. 4, neglecting the adjacent channels.

The expression (8) makes it possible to construct curve 7 (Fig. 4), which gives a lower bound for the possible losses, for example, at $a = 1.75 \cdot 10^{-3}$. For this purpose we take the maximum value of the Fresnel integrals (0.78), as well as the maximum values of the sine and cosine (1). Then $(1/\gamma^2)_{min} = N^2/8800$, i.e., the losses due to the relative acceleration of the target cannot be less than a fixed value even if there are infinitely many channels. These losses will increase as N^2, and consequently for any parameters of the radar set, starting from some value of N depending on the value of the relative acceleration of the target, a coherent system will become less efficient than an incoherent system.

Using the graphs plotted in Figs. 3 and 4, we can make a rational choice of the number of channels and the number of delay lines of the accumulator (the passbands of the teeth of the comb filter). Let us, for example, choose the number of channels in accordance with curve 5 (Fig. 3). We shall assume the loss for a Doppler frequency lying midway between the channels to be equal to the segment 6. Since this loss value corresponds to a number N_0 of pulses, the number of delay lines of the accelerator must also be equal to N_0, and the passband of the teeth of the comb filter [1] is

$$2\Delta f = \frac{F_n}{2N_0}.$$

The graph of q_{por} for the fixed Doppler frequencies corresponding to the tuning of the channels, if $N \geq N_0$, will be determined by the straight line 7. For other values of the Doppler frequencies, q_{por} will vary within the limits of the segment 6.

The threshold-signal advantage over an incoherent accumulator will decrease as N increases and will become a disadvantage.

Because of these losses caused by the gradual violation of the coherence of the reflected signal, it is of considerable interest to consider a mixed type of accumulation, in which the packet is divided into groups of coherently accumulated pulses, in accordance with a selected coherence interval, and the pulses of all the groups are then accumulated incoherently.

If we take the coherence interval initially to be N_0, then in Fig. 3 we can plot graph 8 for mixed accumulation of the signal, assuming that the values on the abscissa axis represent not the number of pulses in a packet but the number of pulse groups accu-

mulated incoherently. Graph 8 is plotted in the same way as graph 1, according to the corrected Kaplan formula but taking account of the new value of q_{por} for $N = 1$. A similar construction for mixed treatment can also be carried out in Fig. 4.

It is clear from the figure that when the number of coherent pulse groups in the packet is small (less than 5), the mixed treatment of a partially coherent packet is almost as efficient as the coherent treatment of a strictly coherent packet with the same number of pulses. In the general case – for any N – the threshold signal-to-noise ratio for mixed treatment is always less than for incoherent treatment by the value of q_{por} of the accumulated coherent group (determined by the interval of coherence).

The foregoing analysis makes it possible to formulate the requirements for the stability of the phase-determining elements of a radar set: the transmitter, the local and coherent heterodyne, and the delay lines. It seems possible to take into account both the absolute value of the frequency difference Δf (the frequency drift) and the drift rate $\Delta f/\Delta t$.

The value of Δf is easy to find from Fig. 3, given the allowable loss in the threshold ratio q_{por}. For this it is necessary to determine from the curves the required b_{dop} for a given N. Then the desired requirement is written in the form

$$|\Delta f|_{доп} \leqslant \frac{b_{доп}}{T_п}.$$

The value of $\Delta f/\Delta t$ can be found from Fig. 4, again after specifying the loss in q_{por} and determining for the required N the necessary value of the coefficient a_{dop}. The desired requirement is of the form $|\Delta f/\Delta t| \leq a_{dop}/\pi T_p^2$.

Thus, in this article we have considered a method for determining the signal threshold power loss arising in a coherent system both because of the limited number of channels and because of the relative acceleration of the target in nonradial motion. The analysis shows that even though the advantage of a coherent system increases as the number of pulses in a packet increases, it becomes more and more difficult to attain this advantage in practice. It is necessary, to use a much larger number of channels. Furthermore, at the present-day velocities of targets and radar-carrying vehicles, the accumulation necessarily requires the introduction of a phase correction for the variation of Doppler frequency due to the relative acceleration of the target, since even an unlimited increase in the number of channels tuned to constant Doppler frequencies will not make possible any substantial reduction of the signal threshold power.

The article gives formulas and graphs which can be used for selecting the number of channels, the passbands of the comb filter and the other parameters of the radar set for different relative accelerations of the target, determining the requirements for the

stability of the apparatus, comparing different forms of treatment – incoherent, coherent, and mixed treatment – from the viewpoint of threshold power, and selecting the interval of coherence for given probabilities of correct detection and false alarms.

REFERENCES

1. Fowler, C.A., Signal Processing Techniques for Surveillance Radar Sets. JRE Trans., 1961, MJL-5, No. 2.

2. Goetz, L.P., Albright, J.D., Airborne Pulse-Doppler Radar. JRE Trans., 1961, MJL-5, No. 2.

3. Gutkin, L.S., Teoriya optimal'nykh metodov radiopriyema pri flyuktuatsionnykh pomekhakh [Theory of Optimal Methods of Radio Reception under Conditions of Fluctuating Noise], "Gosenergoizdat," 1961.

4. Fal'kovich, S.Ye., Priyem radiolokatsionnykh signalov na fone flyuktuatsionnykh pomekh [Reception of Radar Signals Against a Background of Fluctuating Noise], "Sov. radio," 1961.

5. Bakut, P.A., et al., Voprosy statisticheskoy teorii radiolokatsii [Problems in the Statistical Theory of Radar], "Sov. radio," 1963.

6. Bunimovich, V.I., Flyuktuatsionnyye protsessy v radiopriyemnykh ustroystvakh [Fluctuation Processes in Radio Receiving Equipment], "Sov. radio," 1951.

7. Teoriya informatsii i yeye prilozheniya [Information Theory and its Applications], Sbornik perevodov [Collection of Translations], IL, 1960.

8. Seppen, Verstreten, Radiolokatsionnaya stantsiya na volne 8 mm s vysokoy razreshayushchey sposobnost'yu [A High-Resolution 8-mm Wavelength Radar Set]. "Radiotekhnika i elektronika za rubezhom," 1959, No. 2.

Manuscript Page No.	Transliterated Symbols
24	д = d = dopplerovskaya = Doppler
24	п = p = povtoreniye = repetition
28	в = v = vertikal'naya = vertical
29	э = e = effektivnoye = effective
29	пор = por = porogovoye = threshold
31	пр = pr = pravil'noye = correct

31 л.т = l.t = lozhnaya trevoga = false alarm

31 п.р = p.r = pravil'noye = correct

34 доп = dop = dopustimyy = allowable