AD 677 [illegible]

FOA REPORTS

AD No.
DDC FILE COPY

(6) A TACTICAL STUDY OF EVASIVE MANEUVERS,

(10) Ulf Grenander

(11) Sep 68

(12) 39p.

DDC
NOV 13 1968
A

FÖRSVARETS FORSKNINGSANSTALT · (FOA)
RESEARCH INSTITUTE OF NATIONAL DEFENCE
STOCKHOLM 80 · SWEDEN

FOA Reports Vol. 2 No. 4 pp. 1–36 September 1968

FOA REPORTS

FOA REPORTS is a monograph series of unclassified reports dealing with research work of general interest carried out by the staff and consultants of the Research Institute of National Defence (FOA). Documents appearing in FOA REPORTS express the personal opinions of the authors and do not necessarily represent the official view on the subject.

FOA REPORTS appears at irregular intervals, and each issue is priced separately. The intention in the future is that standing orders will be accepted for a year's subscription for issues dealing with categories of subjects which will be specified. Until such categories have been defined readers are invited to place their orders giving their own description of the subject of interest. Orders for single issues or a year's subscription should be sent to the Editorial Office (see below).

EDITORIAL BOARD

Torsten Magnusson, Ph.D., Director General, The Research Institute of National Defence (FOA) – Ansvarig utgivare

Bengt Grabe, Ph.D., Head of the Physics Department (FOA 2)

Carl Gustaf Jennergren, Ph.D., Head of the Department of Research Planning and Operations Research (FOA P)

Nils Henrik Lundquist, M.Sc.Tech., Head of the Electronics Department (FOA 3)

[illegible]-Erik Tammelin, Ph.D., Head of the Department of Chemistry and Medicine (FOA 1)

ACCESSION for
NTIS WHITE SECTION
DDC BUFF SECTION
UNANNOUNCED
JUSTIFICATION
BY
DISTRIBUTION/AVAILABILITY CODES
Dist. AVAIL. and/or SPECIAL

EXECUTIVE EDITOR

Olov Alvfeldt, M.Sc.Tech.

Editorial Office: FOA P, 104 50 Stockholm 80, Sweden

Tel. 08-631500 Cables Foageneral, Stockholm

BLANK PAGE

FOA Reports, Vol. 2, No. 4, 1968

A TACTICAL STUDY OF EVASIVE MANEUVERS*

ULF GRENANDER**

ABSTRACT

In this report some tactical aspects of pursuit and evasion are studied. The emphasis is on the analysis of the conceptual framework and on the construction of analytic models. In order that these models be able to describe real pursuit situations, an attempt is made to incorporate kinematic and dynamic restrictions to the extent that is possible without making the model too difficult to handle. In particular, the relation between the evasive tactics and the method of prediction used by the pursuer is studied. In order to be as concrete as possible, a number of special cases are treated, some of which may be extended to cover more general situations.

TABLE OF CONTENTS

Abstract		1
1.	Introduction	2
2.	Description of the Problem—Basic Notions	4
2.1.	Questions of Dimensionality	4
2.2.	Restrictions	5
2.3.	Information and Uncertainty	5
2.4.	Purpose of Evader and Pursuer	5
2.5.	Prediction	6
2.6.	Optimality Criterion	6
2.7.	Different Types of Solution	6
3.	The Discrete Approach	7
3.1.	General Considerations	7
3.2.	A One-dimensional Example	7
3.3.	A More Realistic Example	8
3.4.	A Three-dimensional Example	9
3.5.	Incomplete Information	10
3.6.	Several Pursuers	11
3.7.	Criticism of the Results	12
4.	The Continuous Approach	12
4.1.	General Considerations	12
4.2.	One-dimensional Pursuit	12
4.3.	A Modification of the Previous Problem	15
4.4.	Other Types of Restriction	16
4.5.	Two-dimensional Pursuit—Simple Models	18
4.6.	A More General Model—Behavior of the Evader	19
4.7.	Linear Predictors	21
4.8.	Non-linear Predictors	22
4.9.	The Case with Constant Velocity in One Direction	26
4.10.	The Case with Two Variable Velocity Components	27
4.11.	Three-dimensional Pursuit	28
4.12.	Pursuit Problems of a More General Type	30
Notes		35
Acknowledgements		36
References		36

* This is a revised edition of a report published by the Research Institute of National Defence (FOA P rapport A 126, March 1963) and in condensed form in Review of the International Statistical Institute (Vol. 32, pp. 177–228, 1965).

** Present address: Division of Applied Mathematics, Brown University, Providence, R.I., U.S.A.

*1 – 681580

NOV 13 1968
A

1. INTRODUCTION

The purpose of this paper is to discuss in quantitative terms some aspects of evasion and pursuit. This is one of the oldest problems in the history of military doctrines, and much has been thought and written about it. Until World War II, most of this was expressed in verbal, qualitative ways and could be said to constitute an important part of the general philosophy of war. In recent years, after the appearance of operations analysis, one has tried to formulate the problems mathematically and to obtain numerical solutions. It goes without saying that in many or perhaps most cases this approach is doomed. The reason for this is clear: the logical structure of the problem is so complex and heterogeneous, that it would be naive to think that the events could be described by mathematical expressions without a drastic loss of realism. Let us think, for example, of the classical naval engagement of type The Battle of Jutland. The outcome will depend upon certain factors that can be discussed in probabilistic terms: the effects of reconnaissance, artillery fire, torpedo attacks, and mine fields. One can also include several tactical parameters: speed, armament, meteorological conditions, etc. Thus we could, at least in principle, measure and analyze the basic properties of the two war machines and use this to construct a mathematical model of the events. However, it would be almost impossible to include in such a model the long chain of human decisions, the breakdown of communications, and all the mistakes and errors that can occur. Thus we would be forced to leave out one of the really essential components of the battle, and this would no doubt invalidate the analysis.

On the other hand, it may be possible to treat limited problems—perhaps forming parts of a battle—by the methods of operations analysis. This is so especially when the problem is well determined, with no or few human decisions involved after the initial phase, and when the tactical factors can be assumed to be known.

In recent years it has become customary to apply the methods of operations analysis to immense military problems, involving major parts of the strategy of a country or of one of its armed forces. By simulation techniques on electronic computers it is possible to obtain solutions that may seem realistic. In the author's opinion such overall solutions can be quite dangerous, if it is not clearly understood that they only represent one of several means for making decisions: such comprehensive decisions still have to be made on politico-military grounds, taking into account many factors that are not included in the quantitative analysis.

In limited problems concerning tactics or the technology of weapons, the possibilities of a numerical approach are greater. With the present development towards more or less automatic weapon systems this possibility is accentuated.

In the following we shall only deal with certain tactical situations, admittedly of quite special character, but taken together covering an interesting area of application. No attempt will be made to formulate a general quantitative theory for pursuit and evasion.

The main goal will be to penetrate the logical structure of some typical problems concerning evasive maneuvers and to construct mathematical models appropriate for a quantitative treatment. It is necessary to get a good idea of the conceptual framework, and a beginning is made here, although it is not at all complete. As the reader will see, the resulting models vary a good deal among themselves, as could be expected, since they are made to fit radically different tactical situations. These models are perhaps more important than the mathematical analysis that we attach to them. The analysis should only be interpreted as a tentative solution, indicating what sort of mathematical reasoning may be useful. If one decides to really use one of these models or an adaptation of it, then a much more complete analysis will be needed anyway.

The mathematical tools are mainly elementary game theory and stochastic processes. We shall use only the basic notions of game theory, and the applications will be simple and direct. For the reader's convenience some notes are attached at the end of the paper, and it should be consulted for more information about the mathematical techniques used, as well as for bibliographical information.

The study of evasive maneuvers must be one of the many objects of work for the groups of mathematicians involved in operations analysis. As far as the author has been able to find out, little has been published on the subject, perhaps for reasons of secrecy. Therefore it is not possible to give a full historical presentation of the development of the subject. It would not be surprising if some of the following is known previously, although it has not been made publicly known.

The first discussion of the problem in mathematical terms seems to be due to Steinhaus (1960), who already in 1925 formulated the following problem. Two players E and P, play a game: P pursues E, who tries to avoid being caught. Denote by T_P and T_E the tactics used by P and E, respectively, and by $t(T_P, T_E)$ the time it takes for P to catch E. Steinhaus then suggests that it is reasonable to choose T_P and T_E such that

$$t(T_P, T_E) = \min_{T_P} \max_{T_E} t(T_P, T_E).$$

The reader familiar with game theory will notice immediately that this is close to the concept of optimal strategy. Actually, Steinhaus seems to have been aware

of the basic problem of whether min max t always equals max min t. No detailed discussion is given in the paper referred to.

The same problem has been treated recently by Kelendžeridze (1961). He assumes that P and E move in the n dimensional space R^n, and their motions are described by the equations

$$P: \dot{x} = \frac{dx}{dt} = f(x, u),$$

$$E: \dot{y} = \frac{dy}{dt} = g(y, v).$$

Here x and y are vectors describing the positions of P and E, respectively. The parameters $u \in R^r$ and $v \in R^s$ represent their tactical behavior, or, more precisely, the tactics are given as functions $u = u(t)$ and $v = v(t)$. Assuming certain regularity conditions and that u can take values in a closed convex polyhedron $\Omega^r \subset R^r$, Kelendžeridze tries to find the tactics realizing the extremal value $\max_v \min_u t(u, v)$, where $t(u, v)$ stands for the time it takes for P to establish contact with E. Such a solution of the extremal problem could be called an optimal pursuit tactic. He solves this problem for the case that

$$\dot{x} = f(x, u) = Ax + Bu,$$

where A and B are constant $n \times n$ and $n \times r$ matrices, respectively. His main result is the following. If $u(t)$, $v(t)$ represent such an optimal tactic, and if $x(t)$ and $y(t)$ are the corresponding trajectories leading to the pursuit time T, then there are vector valued functions,

$$\left.\begin{aligned} \psi(t) &= [\psi_1(t), \psi_2(t), \ldots, \psi_n(t)] \\ \chi(t) &= [\chi_1(t), \chi_2(t), \ldots, \chi_n(t)] \end{aligned}\right\}$$

such that

$$\left.\begin{aligned} f_i = \dot{x}_i &= \frac{\partial H}{\partial \psi_i}, \\ \dot{\psi}_i &= -\frac{\partial H}{\partial x_i}, \\ g_i = \dot{y}_i &= \frac{\partial H}{\partial \chi_i}, \\ \dot{\chi}_i &= -\frac{\partial H}{\partial y_i}. \end{aligned}\right\}$$

Here, H is the Hamiltonian

$$H = \sum_{\alpha=1}^{n} (\psi_\alpha f_\alpha + \chi_\alpha g_\alpha),$$

and for all t in the interval $(0, T)$ we have

$$H[\psi(t), x(t), u(t), \chi(t), y(t), v(t)] = \max_u \min_v H[\psi, x, u, \chi, y, v].$$

Further, the above value of H is constant throughout the time interval, and $\psi(T) = -\chi(T)$.

One should also mention a result of Zięba (1960). He considers motion in a plane where the pursuer is at the point (x_p, y_p) and his opponent at the point (x_e, y_e). Given two homogeneous functions $v_p(x_p, y_p, \dot{x}_p, \dot{y}_p)$ and $v_e(x_e, y_e, \dot{x}_e, \dot{y}_e)$ describing the absolute values of the velocities allowed, we want to find functions $\varphi_p = \varphi_p(x_p, y_p, x_e, y_e)$ and $\psi_p = \psi_p(x_p, y_p, x_e, y_e)$, such that

$$\varphi_p^2 + \psi_p^2 = v_p^2.$$

Similarly, for the evader we want to find similar functions φ_e and ψ_e, such that

$$\varphi_e^2 + \psi_e^2 = v_e^2.$$

The equations of motion are then

$$\left.\begin{aligned} \dot{x}_p &= \varphi_p, \\ \dot{y}_p &= \psi_p, \\ \dot{x}_e &= \varphi_e, \\ \dot{y}_e &= \psi_e. \end{aligned}\right\}$$

with some initial condition. As payoff function we use the time it takes until capture happens; this time may be infinite. If the game is definite and under certain regularity conditions, Zięba states a rule how to arrive at a first order partial differential equation for the time of capture, and this gives us the optimal tactics.

Without going into details it is obvious that these results have a good deal in common in their approach to the problem. They assume the motions of the pursuer and the evader to be fairly general, subject to certain restrictions upon the velocities. These restrictions can be space dependent, and actually that seems to be the case when these methods are of real interest. The same is true in the works of Isaacs (1954 a, b), although his set up is different.

Using these results we can certainly deal successfully with some pursuit problems, at least in principle.

To actually compute the solutions will be laborious, at least if we try to deal with the very complicated kinematic restrictions and the lack of complete information that sometimes obtain.

It is natural to ask if we could arrive at useful solutions by restricting already from the beginning the behaviors of the pursuer and his opponent. We could assume that their motions be described in probabilistic terms and specify *a priori* what type of stochastic behavior we can allow, taking into account what we know beforehand about the capabilities of the two opponents. Naturally, we could not expect our solution to be quite optimal. On the other hand, we could hope to achieve a higher degree of realism, at least in those cases where the models can be made sufficiently detailed.

*2 681580

An early attempt in this direction can be found in a paper by Yovits & Jackson (1955). Although their paper is not written in the terminology of pursuit problems, it is obvious that it can be interpreted in such a way. Consider a stationary stochastic process $x(t)$, hidden by noise $n(t)$, so what we can observe is only their sum $y(t) = x(t) + n(t)$. By filtering the $y(t)$ process, we try to restore $x(t)$ as well as possible in the sense of the least squares criterion. If the spectra of $x(t)$ and $n(t)$ are known, then we can do this by the standard linear theory of stationary processes. On the other hand, we may view this as a game between two players, one of which controls the spectrum of the x-process and tries to prevent successful filtering. The other player tries to counteract this by choosing a suitable filter. We have a max min problem at hand. Yovits & Jackson solve this problem for the case where the mean square value of an nth order derivative $d^n x(t)/dt^n$ has been fixed in advance. We shall see later in the text how this corresponds to pursuit problems of considerable interest.

Such max min problems arise in many pursuit problems. If possible, one would like to have the solution to the corresponding game; especially one should investigate if the game is definite. Grenander (1960) has studied the following problem. One player controls the spectrum of the stationary stochastic process $x(t)$, with, say, a side condition on the total spectral energy. We could think of $x(t)$ as an acceleration. The quantity that we are really interested in is of the form

$$z = \int_0^1 a(t)\, x(t)\, dt,$$

where $a(t)$ is a given function; z may measure the location of the evader. The other player observes the past trajectory or $x(t)$, $t \leqslant 0$. He tries to use this observation to predict z by some z^* and has at his disposal all possible linear predictors. Using as a payoff function the mean square error $\mathrm{E}[z - z^*]^2$, it is shown that the game is definite. Further, the value of the game is simply the largest eigenvalue of the integral kernel

$$K(x, y) = \int_0^{\min(1-x,\, 1-y)} a(x+u)\, a(y+u)\, du.$$

The optimal forms of $x(t)$ and of the predictor can be expressed directly through the corresponding eigenfunction.

This must be an important part of a theory of pursuit and evasion. However, we shall not start directly with these somewhat complicated problems. Instead we shall first consider some simpler problems and use these as our starting point.

2. DESCRIPTION OF THE PROBLEM—BASIC NOTIONS

2.1. *Questions of Dimensionality*

Let us denote the evader by E, or, if we have several evaders, by $E_1, E_2, E_3, \ldots$. At a certain time point t, let us denote by E_t the position of E expressed in a suitable coordinate system. The dimensionality d_E of the space in which E moves is not always well determined by the physical background of the problem. Often it depends upon what the really important aspects of the problem are. Take, e.g., a tank using evasive maneuvers in order to avoid being hit by antitank rockets. Because of its low angular velocity, its normal acceleration is practically negligible. Unless the time of flight of the rocket is unusually long, it may be convenient to describe the position of the tank by a single coordinate, $d_E = 1$. (This question also depends upon the ballistic properties of the rocket, whether it is guided, an so on.) If the weapon used has a long time of flight we will have to work in two dimensions, $d_E = 2$.

The case $d_E = 1$ is mainly of theoretical interest, since in most military situations the evader has more degrees of freedom at his disposal. It seems that the most important case would be $d_E = 2$. We meet this situation, of course, when the motion of E is bound to the surface of the land or of the sea. But even when the problem may appear as three-dimensional, it can be convenient and realistic to assume that $d_E = 2$. The evader E, say an airplane or missile, may be free to move in three dimensions, but circumstances may restrict it to motion in the plane, in order that the navigation system, the bomb sight, or the weapon be able to function. More about this later.

It is not necessary to say much about $d_E = 3$; it is obvious that three-dimensional pursuit problems abound. But how about $d_E > 3$, does this case have any practical relevance? When the target E has a considerable extent in space, not negligible compared to the ballistic dispersion or to the accuracy of the reconnaissance, then one must take into account the geometric configuration of the target. This gives us (at most) three more degrees of freedom, e.g. the Eulerian angles of a solid body. As a typical illustration we may mention an airplane pursued by a missile with an infrared homing device. The probability of the missile hitting the target will depend upon the angle between the hot exhaust of the jet and the line plane-missile.

What has been said here about E and d_E is applicable in part also to P and d_P.

In the author's opinion the general $E - P$ problem to be discussed here contains the fundamental difficulties already in its two-dimensional form. When the number of dimensions increases, we can expect a similar

increase in the computational (and possibly analytical) difficulties that makes it hard to work out a comprehensive solution. Difficulties of an essentially new character do not seem to enter.

2.2. *Restrictions*

When considering E_t as a function of time there are always strong restrictions upon its behavior. It is of the utmost importance that we do not lose these kinematic restrictions when we decide upon a suitable mathematical model. Instead we must make them precise and express them in quantitative form. Sometimes, this restriction simply means that E_t must be in a given region S, which may depend upon time, $E_t \in S$. More often the restriction is expressed in terms of the velocity vector $\dot{E}_t$ or of the velocity $|\dot{E}_t|$, perhaps $|\dot{E}_t| \leq v$. Here v may be given by physical reasons (maximum speed of an airplane) or from tactical considerations (maximum quiet speed of a submarine). Similarly, we may require that the acceleration be bounded, $|\ddot{E}_t| \leq a$, or that some angular velocity be bounded, $|\dot{\varphi}_t| \leq \varphi$. In this connection we may think of the load factor of an airplane.

Conditions of this type can sometimes be replaced by restrictions upon the corresponding average values; this may be more realistic and deserves a brief discussion here. In a certain situation we may be willing to admit the possibility that some quantity, say an acceleration, $|\ddot{E}_t|$, may take large values, but under short periods only. It is then convenient to express the restriction in integral form. Let the *admissible* functions E_t form an ensemble $\mathcal{E}$ (the set of strategies for E). If we have a probability measure P on $\mathcal{E}$ (a mixed strategy), then we know that under certain conditions there is a close relationship between *temporal average values* and *ensemble mean values* over $\mathcal{E}$. We may then use conditions of the form

$$\left.\begin{aligned} &\int_{\mathcal{E}} |\ddot{E}_t|\, dP \leq \alpha, \\ &\int_{\mathcal{E}} |\ddot{E}_t|^2\, dP \leq \beta, \\ &\int_{\mathcal{E}} f(|\ddot{E}_t|)\, dP \leq \gamma, \end{aligned}\right\}$$

just to mention a few possibilities. It is clear that a well-chosen formulation of this sort of restriction must be a compromise between realism and analytic tractability.

2.3. *Information and Uncertainty*

The positions E_t and P_t of the evader and pursuer, respectively, are functions with certain properties, they are *elements of specified function spaces*. However, it would not always be correct to assume that the two opponents know their own position (past or present), and still less their opponent's position. Actually, this will depend very much upon what *navigation system* is used and upon the *method of localizing* the opponent. Here, all possibilities exist on a scale between complete information and complete lack of information. It may happen that one has reasonably good information in both directions (say, in an artillery duel between two destroyers), that one has only little information in one or both directions (say, for a frigate hunting a submarine), or that information is completely missing in one direction (small scale landing operation, without radar reconnaissance, attacked by guided missiles). The uncertainty may here be expressed is statistical terms: the hypothetical position is a stochastic variable with some probability distribution around the true position. It is important to note the difference between the case where this distribution is more or less constant, and that where it depends strongly upon time. The latter case can be exemplified by a navigation system based on dead reckoning, say, based on inertial navigation, and assuming that no new fix is obtained during the time interval under consideration. The cumulative effect of initial errors of observation can have important consequences when studying optimal tactics. It is also important sometimes to note that one side may have some information about the form and location of the trajectories of a missile but not about the time of firing.

2.4. *Purpose of Evader and Pursuer*

To study these tactical problems by operations analysis we must first of all decide *what E and P seek to obtain*. A simple assumption (usually too simple) would be to say that P wishes to reach E as soon as possible, while E wishes to postpone the encounter as long as possible. Often it is more realistic to assume that E has a concrete aim, say, to reach a given point, line or area, or that he wants to keep a certain average course (zigzagging to avoid contact with P). Perhaps E wishes to reach a certain point as quickly as possible, taking into account that the evasive maneuvers take time but have to be made in order to make the risk small that P get an opportunity to use his weapon system. A quite different aim is when E tries to maneuver in an unsystematic manner in order that P lose contact with him, so that he can get away unobserved (a hunted submarine). But even here we may get a side condition: these evasive maneuvers must be made such, that the effect of the weapon system of the enemy can be expected to be small.

It is not necessary that P's aim is to use his weapons at all, instead he may try to collect information about E.

Hunting submarines with helicopter is a typical case, the helicopter makes the observations as follows: it stops, lowers an active hydrophone into the sea and listens for the submarine in different directions. If the submarine has been located but tries to get away, the helicopter (P) must try to predict its future position, go there, and start listening again.

2.5. *Prediction*

When working on specific pursuit problems one becomes soon aware of the following logical relationship that is basic for the whole complex of problems. When E attempts evasive maneuvers, this will influence the tactical behavior of P: P will use a *method of prediction in order to counteract the evasive maneuvers*. In connection with mathematical prediction problems one usually thinks of the Kolmogorov–Wiener theory for optimal predictors. This theory has shown itself very useful in the design of fire control systems. It is of relevance in the present context too, but unfortunately it is too restricted for immediate application in many cases, as will be shown later on.

It is practical to fix some terminology. By the *order of a predictor* we shall mean the number of derivatives of the function E_t at $t=t_0$ that are used to predict the value of E_{t+h}, $h>0$. This notion, of course, applies only to a predictor that uses only the instantaneous values of E_t and of some of its derivatives. A first order predictor is then of the form $E^*_{t+h}=f(E_t, \dot{E}_t)$. By a *linear predictor* we shall mean a predictor constructed as a linear combination of the past and present values of E_t, or, more precisely, as a limit of such linear combinations. This distinction is not always made clear in the literature. The classical prediction theory treats linear predictors only, and this can be a severe restriction.

2.6. *Optimality Criterion*

We have already discussed the objectives of the pursuer and the evader. This discussion was in general terms and perhaps too vague. For a quantitative treatment it is necessary to define precisely an *optimality criterion*. This can be the probability of (at least one) hit, the expected number of hits, the probability that E can reach a certain region unharmed or that he avoids being detected. It could also be quantities such as, the time till $P_t=E_t$, or till $|P_t-E_t|\leq r$. Perhaps one should use the length of the trajectory instead of the time spent in it. It is well known by the practising operations analyst that the choice of optimality criterion is decisive for the outcome of the analysis, and that it is seldom or never possible to point out a uniquely determined criterion as superior to the other available criteria. If we aim at some realism in our study, we must therefore be prepared to work with several criteria simultaneously, even though this will make the theory more heterogeneous.

2.7. *Different Types of Solution*

When we have fixed the tactical situation and the optimality criterion, we can try to work out a solution on three different aspiration levels.

(1) We may assume that one of the opponents has chosen this tactics in some way, and that this is known, at least partially, to the other one. This assumption could be justified when the tactical behavior depends directly upon the technical equipment that one believes will be used during the relevant period. Then we have, mathematically, an ordinary problem of variation, and we should study existence and uniqueness of solutions to an *extremal problem*, $\max_x f(x, y_0)$. Above all, we must seek a suitable way to compute the solution, analytically or numerically, in order to obtain a real solution.

(2) On the other hand, we may not be able to assume *a priori* that the tactics of the opponent is known. In such a case we have a *double extremal* problem of the type $\max_x \min_y f(x, y)$. Often the tactics can be described by one or several functions, so that x and y will take values in some function space. It is not always true that there exists an optimal tactics. This way of looking at the problem may be considered as one half of a game: we look at it only from the point of view of one player and try to maximize his payoff, assuming that his opponent behaves in an optimal manner.

(3) Finally we may try to solve the whole *game*: determine $\min_y \max_x f(x, y)$, and see if this value coincides with the value we already got. In such a case the game is definite, and mathematically the situation is favorable. In general, the spaces of admissible strategies (usually randomized) will be so large that we cannot hope to meet definite games very often. It seems that the existing theory of games will give few concrete hints in this direction, and it will therefore be necessary to study in detail the specific situations.

Normally we would prefer to work on the highest level. However, in order to arrive at definite, and mathematically tractable, games, we would often have to impose strong restrictions and simplifications. This will be evident in the following chapters. Therefore, we are confronted by a choice: do we want a mathematically attractive and polished solution to a problem with little relation to reality, or do we prefer a less complete solution of a problem formulated in a more realistic way? Many operations analysts (including the author) believe that the second alternative is often preferable to the first one.

3. THE DISCRETE APPROACH

3.1. *General Considerations*

Let us specialize and make the situation more concrete. A pursuer P and an evader E move in a plane, $d=2$, with certain kinematic restrictions, at least as far as E is concerned. The speeds of P and E will be denoted by V and v, respectively. To start with, it will be assumed that P can move more freely than E, and that the *speed ratio* $V/v>1$. We may think of E as a submarine carrying out evasive maneuvers submerged, but that its vertical motion can be neglected, so that its position is described by plane coordinates. P may be a helicopter trying to find and follow E. Or P may be one (probably one out of several) antisubmarine rocket fired from a submarine chaser.

Let us assume that, at a certain moment, $t=0$, E and P observe each other, and that P has complete information about the position and the velocity vector of E. (Later on we will have to relax this unrealistic condition.) It is irrelevant whether E has or does not have information about P's position and velocity vector, since P's continued motion is very free and hence not strongly dependent upon initial values.

After $t=0$, the opponents cannot observe each other for a while, and we are waiting for what will happen at some future time $t=h$. In the examples mentioned above, this may correspond to the time point when the helicopter lowers its hydrophone again or when the antisubmarine rocket reaches the plane where the target moves. During the interval $(0, h)$ E has moved along some trajectory with the end point $E_h=Q$ that can be situated in a region S of the plane, see Fig. 1.

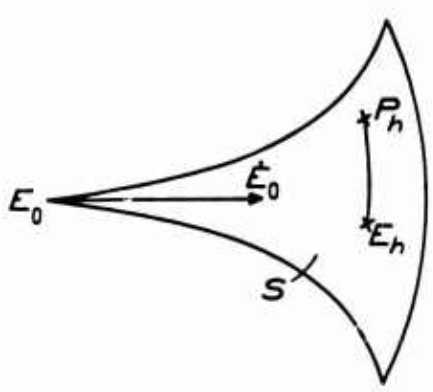

Fig. 1. The region S which the evader E can reach.

The boundary to the right of S corresponds to E using his maximum speed. The lower and upper boundaries of S correspond to maximum angular velocity. It is often reasonable to assume that E uses his highest speed all the time. If this is so, then S will look something like Fig. 2. The region will be long and narrow, unless E can steer so much that the region is made wider.

Now we must define the tasks of P and E and the corresponding optimality criterion. If P tries to fire at

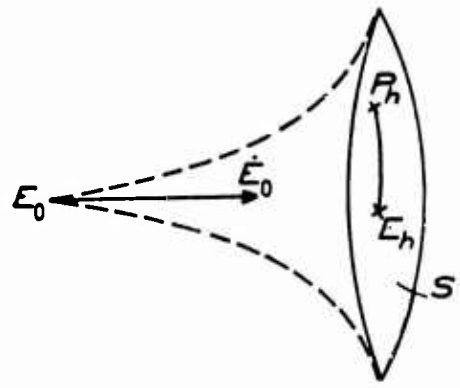

Fig. 2. The region which E can reach with maximum speed.

E to hit and destroy him, then we may use the probability of hit as a criterion. Let us suppose that this probability is a decreasing function $f(R)$ of the distance $R=|E_h-P_h|$. E will try to make R large by choosing among the possible values of E_h. P will do the opposite.

Let us first study the case where P chooses a position $P_h \in S$. Then we can describe his tactics by a probability distribution F_P over S. Similarly, E has some probability distribution F_E over S. If we, for simplicity, choose the criterion as $-R^2$, it is clear that E wishes to maximize U, and P wishes to minimize U, where

$$U=\int_{E_h \in S}\int_{P_h \in S} R^2(P_h, E_h)\, dF_{E_h} dF_{P_h}.$$

The payoff function R^2 is a continuous function of P_h and E_h.

S is usually a compact part of the plane. A general result of the classical game theory tells us that the game is definite, it has a value. It remains to determine the corresponding tactics. In general we will do this numerically, but, if the situation is simple enough, analytical methods may succeed. To familiarize ourselves with the problem we shall in the next section consider a few simple cases. We will not meet anything mathematically exciting, nor will the models be of much practical value. Nonetheless, we hope to understand the pursuit problem better in this way, enabling us to go on to more interesting situations.

3.2. *A One-dimensional Example*

Let us assume that S consists of an arc of a circle, say, an arc smaller than a half-circle, see Fig. 3. One can guess the solution: P shall go straight ahead, and E shall go to one of the end points of S, with the probabilities $\frac{1}{2}$, $\frac{1}{2}$. To prove this, we note that if P goes to P_h, and if E uses the tactics described, then the payoff is

$$\tfrac{1}{2} l_1^2 + \tfrac{1}{2} l_2^2 \geq l_0^2.$$

This inequality holds, since

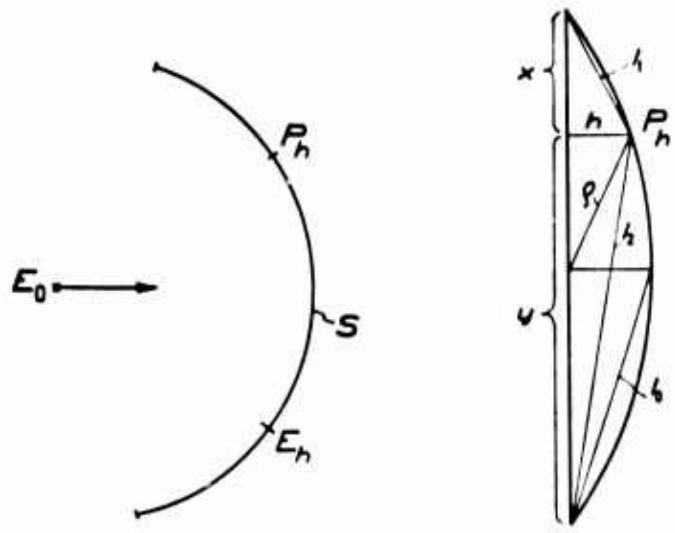

Fig. 3. The case where S consists of an arc of a circle.

$$l_1^2 + l_2^2 = x^2 + h^2 + y^2 + h^2 = 2\left(\frac{x+y}{2}\right)^2 + 2\left(\frac{x-y}{2}\right)^2 + 2h^2$$

$$= 2\left(\frac{x+y}{2}\right)^2 + 2\varrho^2 \geqslant 2\left(\frac{x+y}{2}\right)^2 + 2h_{\max}^2 = 2l_0^2.$$

On the other hand, if P goes straight ahead, and if E goes to some point E_h, the payoff is at most l_0^2. Hence the two tactics described above are optimal, and the value of the game is l_0^2.

We leave to the reader to study the case of S being a circular arc with an opening angle of more than 180°.

There does not seem to be any good reason why P_h should only be allowed to take values in S. However, with the (somewhat arbitrarily chosen) payoff function that we have used, $R^2(P_h, E_h)$, the pursuer P will not lose anything by restricting himself to the region $\bar{S}$ formed as the convex hull of S.

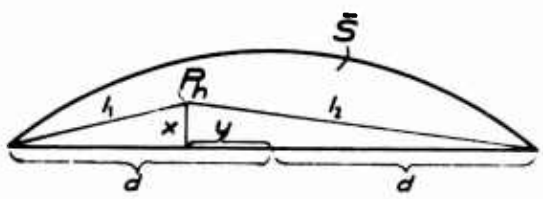

Fig. 4. The case where S consists of a segment of a circle.

Let us see how this would modify the discussion of our example. The region $\bar{S}$ is now a segment of the circle, see Fig. 4. The best tactics for E will be the same as before, whereas P should not steer to the midpoint of the chord bounding $\bar{S}$. With notation used in Fig. 4, we have

$$\left.\begin{aligned} l_1^2 &= (d-y)^2 + x^2, \\ l_2^2 &= (d+y)^2 + x^2, \end{aligned}\right\}$$

so that $$\tfrac{1}{2} l_1^2 + \tfrac{1}{2} l_2^2 = d^2 + y^2 + x^2 \geqslant d^2.$$

This is one of the inequalities needed to prove the statement. The other follows immediately.

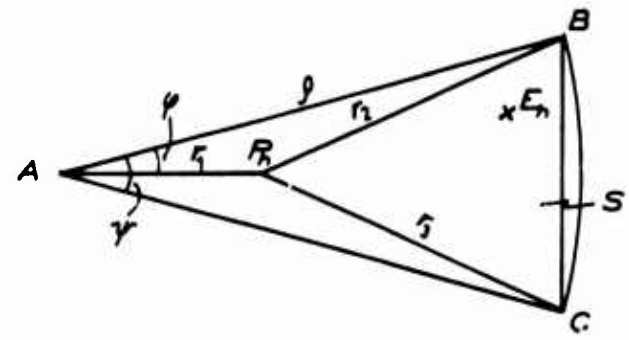

Fig. 5. The case where S consists of a circular sector.

3.3. *A More Realistic Example*

The situation described can be said to correspond to the case when the evader uses his highest speed all the time. A somewhat more realistic assumption would be to let S consist of a narrow region, resembling a thin crescent. We do not expect that this will lead to any drastically changed tactics. That may be the case, however, when E sometimes slows down very much, so that S will have a form similar to a sector. For simplicity, let S be such a sector, see Fig. 5. To treat this case, we note that the payoff function is convex in the variable P:

$$\|E - xP_1 - (1-x)P_2\|^2 \leqslant x\|E - P_1\|^2 + (1-x)\|E - P_2\|^2,$$

see Fig. 6.

We have $$R^2 = r^2 + x^2\varrho^2 - 2x\varrho r\cos\varphi$$

and $$\frac{d^2R^2}{dx^2} = 2\varrho^2 > 0.$$

We know then (Fundamental theory for continuous games, see Notes) that the best strategy for P is pure, that the value of the game is

$$v = \min_P \max_E R^2(E, P),$$

and that the optimal strategy P_0 for the pursuer is a solution of the equation

$$\max_E R^2(E, P_0) = v.$$

To compute the value v we must first maximize $R^2(E, P)$ when E varies and P is kept fixed. The maximum is attained when E is in one of the corners of the triangle ABC (Fig. 5). Then we minimize when P varies, and the minimum is realized when P is chosen as the center of the circle circumscribing ABC; this can be seen using a differential argument. It remains to determine the best strategy for E: it will be to go to one of the corners A, B, or C, with the probabilities

$$\left.\begin{aligned} Pr(B) = Pr(C) = p &= \frac{1}{4\cos^2\psi/2}, \\ Pr(A) &= 1 - 2p, \end{aligned}\right\} \quad \psi < \frac{\pi}{2}.$$

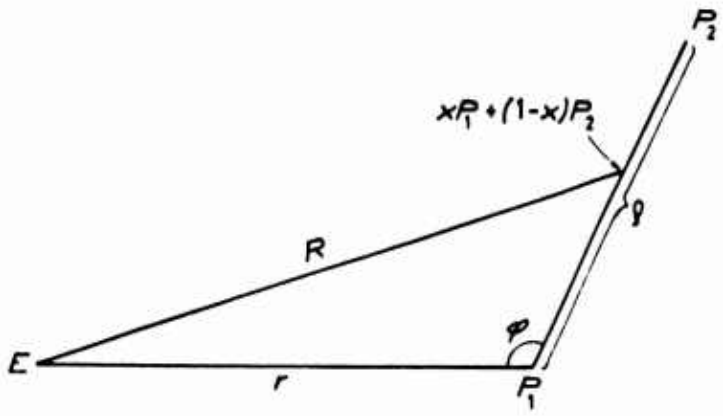

Fig. 6. Demonstration that the payoff function is convex.

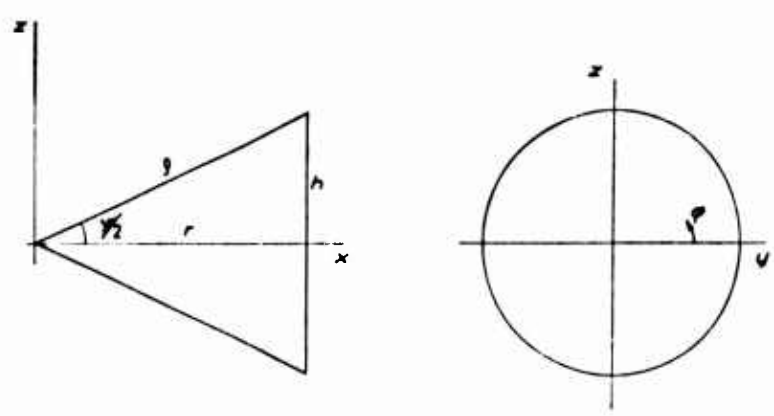

Fig. 7. The case where S is a circular cone.

If $\frac{\pi}{2} < \psi < \pi$, we choose instead

$$\left.\begin{aligned} Pr(B) &= Pr(C) = \tfrac{1}{2}, \\ Pr(A) &= 0, \end{aligned}\right\}$$

and P_h should be taken as the midpoint of the line segment AB.

The latter case is proved in the same way as in 3.2. In order to prove the first case, we study the function

$$f(P) = (1-2p)\, r_1^2 + p r_2^2 + p r_3^2.$$

Denoting r_1 by x, we find

$$\begin{aligned} f(P) &= (1-2p)\, x^2 + p[x^2 + \varrho^2 - 2x\varrho \cos\varphi] \\ &\quad + p[x^2 + \varrho^2 - 2x\varrho \cos(\psi - \varphi)] \\ &= 2p\varrho^2 + x^2 - 2px\varrho[\cos\varphi + \cos(\psi - \varphi)]. \end{aligned}$$

Considered as a function of x and φ, $f(P)$ will take its minimum inside S in the point

$$\varphi = \frac{\psi}{2},$$

$$x = 2p\varrho \cos\frac{\psi}{2}.$$

This minimum is now computed as

$$\min_P f(P) = 2p\varrho^2 - 4p^2\varrho^2 \cos^2\frac{\psi}{2}.$$

The evader can maximize this expression by choosing for p the value given above, giving

$$x = \frac{\varrho}{2\cos\psi/2}, \quad \max_E \min_P f(P) = x^2 = \frac{\varrho^2}{4\cos^2\psi/2}.$$

This shows that P should be chosen as the center of the circumscribing circle, as stated above.

Instead, if P_h is fixed in the center of the circle, and E_h varies, we get

$$\|P_h - E_h\|^2 \leq v,$$

and this proves the optimality.

3.4. *A Three-dimensional Example*

It is clear that we can treat in a similar way situations where S has a more complicated form. In principle we can also deal with three-dimensional versions of the same problem. It may be instructive to consider the case of S being a circular cone with the opening angle ψ and the side ϱ (Fig. 7). P's best strategy is to steer toward the center of the sphere circumscribing the cone. E shall go to the vertex of the cone with the probability $1-p$, and to the periphery of the circle bounding the base of the cone with probability p. On that periphery, E can choose any probability distribution the mean of which coincides with the center of the base. The probability p is given as

$$p = \frac{1}{2\cos^2\psi/2}.$$

When ψ is obtuse, we put $p = 1$, and P should go to the center of the base.

In order to prove these assertions, we first observe that E, trying to come as far as possible from P, always will go to some extreme point of the cone, either to the vertex V or to the periphery of the base. If E goes to the vertex with probability $1-p$, the probability mass on the periphery will be p. On that periphery, E chooses a point from a probability distribution over the interval between $-\pi$ and $+\pi$. If the probability mass on the line element $r\,d\varphi$ of that periphery is written as $\gamma(\varphi)\, r\, d\varphi$, we must have

$$r\int_{-\pi}^{+\pi} \gamma(\varphi)\, d\varphi = p.$$

We introduce an orthogonal coordinate system with the origin in the vertex, the x axis along the axis of the cone. Counting the angle φ along the periphery from the positive y axis to the positive z axis, any point on the periphery will have the coordinates $x = h$, $y = r\cos\varphi$, $z = r\sin\varphi$, where $h = \varrho\cos\psi$ and $r = h\sin\psi$.

The center of gravity of the probability mass distribution on the periphery will then have the coordinates $y = \alpha$, $z = \beta$, given by

$$r^2 \int_{-\pi}^{+\pi} \gamma(\varphi) \cos\varphi \, d\varphi = p\alpha,$$

$$r^2 \int_{-\pi}^{+\pi} \gamma(\varphi) \sin\varphi \, d\varphi = p\beta.$$

If P goes to the point (xyz), the expected value of the squared distance between P and E will be

$$\begin{aligned} S &= (1-p)(x^2+y^2+z^2) \\ &\quad + \int_{-\pi}^{+\pi} [(h-x)^2 + (r\cos\varphi - y)^2 + (r\sin\varphi - z)^2] r\gamma(\varphi)\, d\varphi \\ &= (x-ph)^2 + (y-p\alpha)^2 + (z-p\beta)^2 + p(r^2+h^2) \\ &\quad - p^2h^2 - p^2\alpha^2 - p^2\beta^2. \end{aligned}$$

Here P, being able to choose the parameters x, y, and z, can minimize S by putting $x = ph$, $y = p\alpha$, and $z = p\beta$. He will thus go to a point on the line between the vertex and the center of the distribution on the periphery, such that the distance to the vertex is p times the length of the whole line. The minimized value is then

$$\min_P S = p(r^2+h^2) - p^2(h^2+\alpha^2+\beta^2).$$

Now E, being able to choose the parameter p and the probability distribution on the periphery, wants to maximize this expression. This will mean, first that he puts $\alpha = \beta = 0$, i.e., that he chooses a probability distribution with the center in the center of the base, and second that he puts p equal to

$$p = \frac{r^2+h^2}{2h^2} = \frac{1}{2\cos^2\psi/2}.$$

The value of the game is then

$$\max_E \min_P S = \frac{(r^2+h^2)^2}{4h^2} = \frac{r^2+h^2}{4\cos^2\psi/2} = x_{\text{opt}}^2.$$

The strategy adopted by P thus means that he will go to a point with the same distance x_{opt} to all those points to which E can go.

3.5. *Incomplete Information*

We have assumed complete information at time $t = 0$: P knows the position and velocity vector of E with no observational errors. Let us now discuss how this should be modified when the errors of observation are so large that they should not be neglected.

First, the simple but relatively uninteresting case where the only error is in the determination of the position E_0. We choose a coordinate system with its origin in E_0. The error of observation is a stochastic vector ε, about whose probability distribution we assume only that second order moments exist and that $\mathrm{E}\varepsilon = 0$. The last condition means that if our method of observation has a systematic error, then this has been compensated for by a suitable correction. We will choose P_h as

$$P_h = \varepsilon + x,$$

where x is a vector that can be stochastic or fixed. In both cases it can be described by a probability distribution $F_P(x)$, possibly degenerate. Clearly, F_P does not depend upon ε, since it is chosen by P who does not know the actual error of observation, ε. We get the payoff, with $E_h = y$, as

$$U(F_P, F_E) = \int_{E_h} \int_{P_h} \varphi(x-y)\, dF_P(x)\, dF_E(y),$$

where

$$\begin{aligned} \varphi(x-y) &= \int_\varepsilon \|\varepsilon + x - y\|^2 \, df(\varepsilon) = \mathrm{E}_\varepsilon \|\varepsilon + x - y\|^2 \\ &= \mathrm{E}_\varepsilon \|\varepsilon\|^2 + \|x-y\|^2 + 2\mathrm{E}_\varepsilon[\varepsilon, (x-y)] \\ &= \sigma_\varepsilon^2 + \|x-y\|^2. \end{aligned}$$

This gives us

$$U(F_P, F_E) = \sigma_\varepsilon^2 + \int_{E_h} \int_{P_h} \|x-y\|^2 \, dF_P \, dF_E,$$

where the first term on the right side is a constant characteristic for the method of observation. The second term is of the type we have met before. Therefore we know, at least in principle, how to deal with this problem.

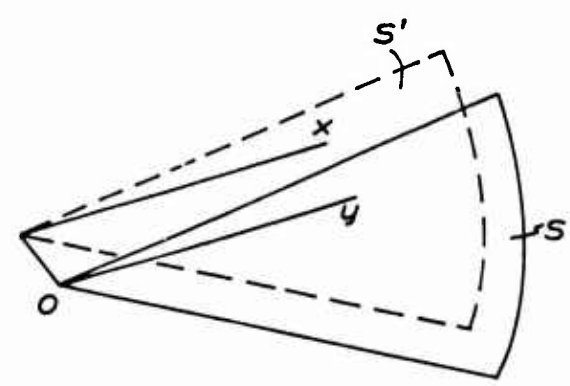

Fig. 8. Observational error.

So far, we have not allowed any error in the determination of the velocity vector $\dot{E}_0$. In many cases, the error in determining the direction of E's trajectory is the important one. We may think of the ordinary plotting method. To handle this angular error too, let us consider Fig. 8. For the sake of clearness the figure has been drawn with a very large observational error. The vector x can now be written as

$$x = \varepsilon + T\xi.$$

Here, ξ is the position relative to a coordinate system fixed in relation to the region S', and T is a rotation

operator corresponding to the angular error. We have a stochastic vector ξ in R^2 or R^3 and a stochastic orthogonal operator T in R^2 or R^3. The tactics of E and P are described by probability distributions F_E and F_P. For fixed values of ξ and y, we get the payoff

$$B = \mathbf{E}_{\varepsilon,T}\|x-y\|^2 = \mathbf{E}_{\varepsilon,T}\|\varepsilon + T\xi - y\|^2$$
$$= \int_{\varepsilon,T}\|\varepsilon + T\xi - y\|^2\, dF(\varepsilon, T),$$

where $F(\varepsilon, T)$ describes the simultaneous probability distribution of ε and T. Hence,

$$B = \mathbf{E}_{\varepsilon,T}\|\varepsilon\|^2 + \mathbf{E}_{\varepsilon,T}\|T\xi - y\|^2 = \sigma_\varepsilon^2 + \mathbf{E}_{\varepsilon,T}\|T\xi - y\|^2,$$

where σ_ε^2 is a constant. To get some idea of how the second term differs from the cases we have studied, we consider the plane situation, x and $y \in R^2$. The notation is given in Fig. 9.

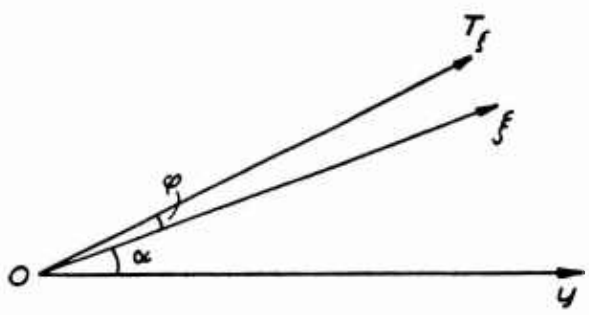

Fig. 9. Observational error in the plane case.

We get

$$\|T\xi - y\|^2 = \|T\xi\|^2 + \|y\|^2 - 2(T\xi, y)$$
$$= \|\xi\|^2 + \|y\|^2 - 2\|\xi\|\cdot\|y\|\cos(\alpha + \varphi)$$

and

$$\mathbf{E}_{\varepsilon,T}\|T\xi - y\|^2 = \|\xi\|^2 + \|y\|^2 - 2\|\xi\|\cdot\|y\|\,\theta\cos(\alpha + \varphi_0).$$

Here we have defined the non-random quantities θ and φ_0 through the relations

$$\left.\begin{aligned}\int \cos\varphi\, dF(\varphi) &= \theta\cos\varphi_0,\\ \int \sin\varphi\, dF(\varphi) &= \theta\sin\varphi_0.\end{aligned}\right\}$$

With no systematic errors, the quantity φ_0 will be close to zero, whereas θ can differ considerably from 1. We have to study the payoff function

$$\|\xi\|^2 + \|y\|^2 - 2\theta\|\xi\|\cdot\|y\|\cos\alpha$$

instead of

$$\|\xi\|^2 + \|y\|^2 - 2\|\xi\|\cdot\|y\|\cos\alpha.$$

Apparently, the angular error affects the problem in a way that does not lead to complications in principle.

Errors in the determination of $\|\dot{E}_0\|$ could also be important. The possible region for E_h does no longer behave as a rigid body: S' is not necessarily congruent with S. The length of S' (in general funnel-shaped) depends upon how close $\|\dot{E}_0\|$ is to its largest value, the maximum speed. We shall not enter into a discussion of such modifications; if the applications seem to require such an extension it seems to be possible.

We can incorporate into the model the possibility of navigational errors of P. Let us say that P aims at P_h, but that the position really reached is $P_h + \delta$, where δ is a stochastic vector. Assume that $\mathbf{E}\delta = 0$ and that δ is independent of P_h. We then get the payoff function

$$\mathbf{E}_\delta\|E - P_0 - \delta\|^2 = \|E - P_0\|^2 + E_\delta\|\delta\|^2.$$

It differs from the previous formula only by an additive constant.

3.6. *Several Pursuers*

When we have more than one pursuer, we meet a more essential modification. Say that we consider the two pursuers P_1 and P_2. As usual, their optimal behavior will depend upon what payoff function we use. This will reflect the purpose of the pursuers very clearly and with direct and practical consequences.

For simplicity we will chose S as the interval $(0, 1)$ and consider the two payoff functions

$$\left.\begin{aligned}B_1 &= \|E - P_1\|^2,\\ B_2 &= \|E - P_2\|^2.\end{aligned}\right\}$$

They measure the value of the achievements of P_1 and P_2.

Let us first see what happens if the total payoff is simply the sum $B = B_1 + B_2$ of the individual ones. The two pursuers P_1 and P_2 play two identical games. P_1 and P_2 shall behave as if they were alone, and steer toward the point $P_h = \frac{1}{2}$. E shall choose one of the points $E_h = 0$, $E_h = 1$, with probabilities $\frac{1}{2}$, $\frac{1}{2}$.

If, instead, $B = \max(B_1, B_2)$, we get the same result. To see this, let E behave as described, and $P_1 \leqslant P_2$, then

$$\text{payoff} = \tfrac{1}{2}(1 - P_1)^2 + \tfrac{1}{2}P_2^2 \geqslant \tfrac{1}{4}.$$

Instead, if $P_1 = P_2 = \frac{1}{2}$, we get

$$\text{payoff} = (E - \tfrac{1}{2})^2 \leqslant \tfrac{1}{4},$$

which verifies the statement; the value $v = \frac{1}{4}$.

Finally, if we choose $B = \min(B_1, B_2)$ we get another result, but it will not be discussed here.

There are of course many other situations, but these three illustrate some typical cases. The first, $B = B_1 + B_2$, implies an additive effect. It could be reasonable when we study the expected number of hits. It could also be relevant in hunting submarines, if the total pressure

*3 – 681580

effect on the submarine is approximately equal to the sum of the individual pressure components. In reconnaissance it might also be used, or perhaps the more precise formula $B = B_1 + B_2 - B_1 B_2$. The second case, $B = \max(B_1, B_2)$, could be relevant, if the total effect B depends upon the worst (largest) result of B_1 and B_2. The third case, $B = \min(B_1, B_2)$, is based on the best (smallest) result of B_1 and B_2. It will lead to the well known notion of artificial dispersion that appears in artillery tactics.

3.7. *Criticism of the Results*

It is possible to criticize the discrete formulation of the problem that we have adopted in this chapter. In the discussion we have assumed that the point of time h is fixed and known. If this is not so, the region S is no longer determined by kinematic data, and the previous reasoning is not applicable directly. If h has a probability distribution known for E and P, then we can take into account the variability of h without essential modifications. Otherwise, we get one more game parameter, h. In spite of its obvious importance, we shall not discuss this possibility.

Another, more essential, objection to the discrete point of view is the following. After time h the bombardment, or the reconnaissance, etc., has been completed. But in general we will still be interested in E and P and in what happens to them afterwards. Perhaps the game is repeated over and over again. We get a sequence of cycles of more or less similar type. If these cycles can be assumed to be approximately independent of each other, then we could just apply the discrete model several times. Very often, however, do we have interdependence between the cycles. This is clear when the quantities $h_1, h_2, h_3, \ldots$ are not known in advance. Let us assume, e.g., that in a naval situation E's best tactics is to steer port or starboard (with probabilities $\frac{1}{2}, \frac{1}{2}$) with maximum angular velocity during the time h. If we have several consecutive cycles it might be optimal to keep the angular velocity constant. But then, P could predict the behavior of E already after the first cycle. We must look more carefully into the way the cycles influence each other.

Our aim is then to study a sequence of cycles of individual games. It seems to be a good starting point to investigate a continuum of cycles; this can be said to correspond to the case where $h_1, h_2, h_3, \ldots$ are unknown.

4. THE CONTINUOUS APPROACH

4.1. *General Considerations*

Let us study the following typical situation. The evader E moves along some curve E_t the form of which is subject to kinematic restrictions as discussed in Chapter 2. At time t the pursuer P has more or less complete knowledge of the curve E_s for $s \leq t$. Using this knowledge, P makes a prediction $P_{t,h}$, a predicted impact point or whatever one chooses to call it. In a certain sence, $P_{t,h}$ can be said to approximate E_{t+h}. Measuring the result by a payoff function $B(E_{t+h}, P_{t,h})$, we have again an extremal problem. Here E controls the choice of trajectory E_t, or rather, he chooses the probability distribution governing the stochastic process E_t. P chooses the method of prediction. The events may turn out something like Fig. 10, where $P_{t,h}$ is the dashed line. The arrows denote the errors of prediction, to use a term that is not entirely adequate.

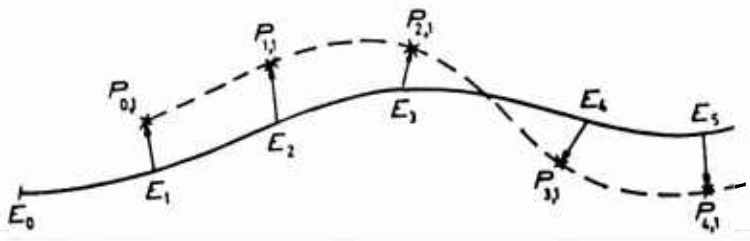

Fig. 10. Paths of P and E.

If the problem has not been specified in more detail it is difficult to say anything general about what optimal tactics to use. It is clear, however, that the evasive trajectories E_t must not form a highly regular system of functions. Indeed, if the trajectories were regular enough (analyticity, etc.), the pursuer could predict the future positions of E without error; at least this is so if we neglect observational errors. Such a complete predictability is obviously unrealistic. The path E_t must be allowed to be more irregular. This can express itself in different ways, e.g. that derivatives may not exist for orders greater than one. Sometimes we will be led automatically to such classes of function E_t when we solve the extremal problem. Such classes of function are often very wide and not compact under natural topologies. This introduces difficulties, since we cannot in general apply the fundamental theorem of game theory under these conditions. Difficulties remain, even if we limit ourselves to the determination of a max min solution. While the reasoning in Chapter 3 was based on entirely elementary mathematical facts, we will need somewhat more sophisticated ideas in the present chapter.

4.2. *One-dimensional Pursuit*

We start, of course, with a one-dimensional problem. E moves along the real line with the trajectory E_t. We

consider E's velocity $v(t) = dE_t/dt$ as composed of two parts, v and $y(t)$, $v(t) = v + y(t)$. The first term, v, is a constant and corresponds to the fact that E moves according to some given purpose. It may be a tank advancing against the enemy. To avoid being hit while advancing he makes evasive maneuvers. The time points when the individual shots are fired against E are not known by him in advance. The term $y(t)$ describes the attempts to evade. These values (positive or negative) are added to an average value v. We shall assume more precisely that $y(t)$ forms a stationary, stochastic process with mean value zero. Such an assumption may seem reasonable, but it is more difficult to motivate the choice of particular probability distributions for $y(t)$. Therefore we shall only assume that $y(t)$ has a covariance function $r(t)$ corresponding to a spectral distribution function $F(\lambda)$, so that

$$\left.\begin{aligned} &\mathbf{E}y(t) = 0, \\ &r(t) = \mathbf{E}y(s)\,y(s+t) = \int_0^\infty \cos t\lambda\, dF(\lambda). \end{aligned}\right\}$$

The kinematic restrictions make it improbable for $|y(t)|$ to take large values under long time intervals. Let us formalize this statement as

$$r(0) = \mathbf{E}y^2(t) \leq C.$$

We shall return later to this condition and discuss alternative forms of it. The set of strategies is here the set of all non-decreasing functions $F(\lambda)$ whose variation does not exceed C.

As far as P is concerned, we shall study first what happens when he uses a linear first order predictor as follows. The value of E_T is observed at equidistant points of time $t_p = n$. The observed values of E_n and E_{n-1} are used to predict E_{n+1}.

$$E^*_{n+1} = E_n + (E_n - E_{n-1}) = 2E_n - E_{n-1}.$$

The formula is exact for uniform motion. We get the extrapolation error

$$E_{n+1} - E^*_{n+1} = E_{n+1} - 2E_n + E_{n-1},$$

a second order difference. The mean square error σ^2 is then

$$\begin{aligned} \sigma^2 &= \mathbf{E}(E_{n+1} - 2E_n + E_{n-1})^2 \\ &= \mathbf{E}\left[\int_n^{n+1} (v + y(t))\,dt - \int_{n-1}^{n} (v + y(t))\,dt\right]^2 \\ &= \mathbf{E}\left[\int_{n-1}^{n+1} y(s)\,k(s)\,ds\right]^2, \end{aligned}$$

where the function $k(s) = 1$ in the interval $(n, n+1)$ and $k(s) = -1$ in $(n-1, n)$. This gives us

$$\begin{aligned} \sigma^2 &= \int_{n-1}^{n+1}\int_{n-1}^{n+1} r(s-t)\,k(s)\,k(t)\,ds\,dt \\ &= \int_{n-1}^{n+1}\int_{n-1}^{n+1}\int_0^\infty \cos[(s-t)\lambda]\,dF(\lambda)\,k(s)\,k(t)\,ds\,dt. \end{aligned}$$

Changing the order of integration, we find

$$\begin{aligned} \sigma^2 &= \int_0^\infty \int_{n-1}^{n+1}\int_{n-1}^{n+1} \cos[(s-t)\lambda]\,k(s)\,k(t)\,ds\,dt\,dF(\lambda) \\ &= \int_0^\infty \varkappa(\lambda)\,dF(\lambda). \end{aligned}$$

Here we have introduced

$$\varkappa(\lambda) = \int_{n-1}^{n+1}\int_{n-1}^{n+1} \cos[(s-t)\lambda]\,k(s)\,k(t)\,ds\,dt.$$

Substituting $t = s - u$,

$$\varkappa(\lambda) = \int_{n-1}^{n+1}\int_{u-s-n-1}^{u-s-n+1} \cos u\lambda\,k(s)\,k(s-u)\,du\,ds.$$

Changing the order of integration gives

$$\begin{aligned} \varkappa(\lambda) &= 2\int_0^2 \cos u\lambda \int_{s-n-1+u}^{s-n+1} k(s)\,k(s-u)\,ds\,du \\ &= 2\int_0^2 \cos u\lambda\,h(u)\,du. \end{aligned}$$

Here the function $h(u)$ is computed as

(a) $0 < u < 1$:

$$\begin{aligned} h(u) &= \int_{n-1+u}^{n+1} k(s)\,k(s-u)\,ds \\ &= \int_n^{n+1} k(s-u)\,ds - \int_{n-1+u}^{n} k(s-u)\,ds \\ &= \int_{n-u}^{n+1-u} k(z)\,dz - \int_{n-1}^{n-u} k(z)\,dz \\ &= (1-u) - u + 1 - u = 2 - 3u, \end{aligned}$$

(b) $1 < u < 2$:

$$\begin{aligned} h(u) &= \int_{n-1+u}^{n+1} k(s-u)\,ds \\ &= \int_{n-1}^{n+1-u} k(t)\,dt = (n-1) - (n+1-u) = u - 2, \end{aligned}$$

so that $$h(u) = \begin{cases} 2 - 3u, & 0 < u < 1, \\ u - 2, & 1 < u < 2. \end{cases}$$

The form of the function $h(u)$ is seen in Fig. 11.

We have to solve the variational problem

$$\sigma^2 = \int_0^\infty \varkappa(\lambda)\,dF(\lambda) = \max_F, \quad \int_0^\infty dF(\lambda) \leq C.$$

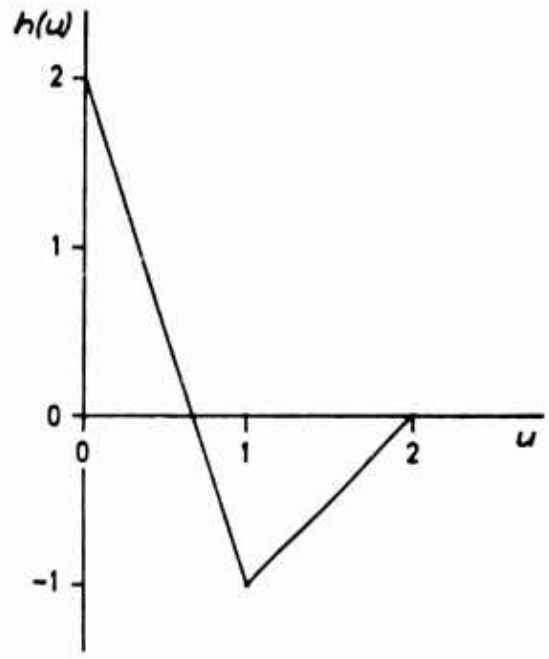

Fig. 11. The function $h(u)$.

Since $C^{-1}F(\lambda)$ is a distribution function, it is clear that the maximum is attained by locating the whole variation C in the point or points where the function $\varkappa(\lambda)$ has its largest value. This function can be written as

$$\varkappa(\lambda) = \frac{2}{\lambda^2}[3 - 4\cos\lambda + \cos 2\lambda] = 4\left(\frac{1-\cos\lambda}{\lambda}\right)^2.$$

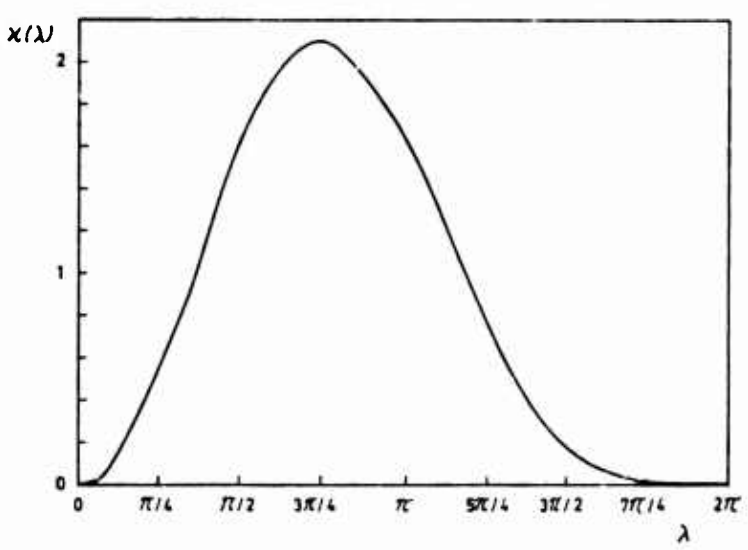

Fig. 12. The function $\varkappa(\lambda)$.

$\varkappa(\lambda)$ is shown in Fig. 12. The maximum is found from the equation

$$\operatorname{tg}\frac{\lambda}{2} = \lambda.$$

This equation can be solved numerically, having a single root between 0 and 2π:

$$\lambda_{\text{opt}} \approx 2.331 \approx 133°33'.$$

The corresponding value of $\varkappa$ is

$$\max_{\lambda} \varkappa(\lambda) = (2\sin\lambda_{\text{opt}})^2 \approx 2.10.$$

We get the minimum square error $\sigma^2 \approx 2.10\,C$.

Hence E shall chose his velocity as

$$v(t) = v + \sqrt{C}\cos(\lambda_{\text{opt}}\cdot t + \varphi),$$

where φ is a phase angle chosen at random (with a rectangular distribution) in the interval $(0, 2\pi)$. The resulting trajectory is

$$x(t) = x(0) + vt + \frac{\sqrt{C}}{\lambda_{\text{opt}}}\sin(\lambda_{\text{opt}}\cdot t + \varphi).$$

To achieve some realism it may be necessary to impose some *restriction on the acceleration* $\dot{v}(t)$, rather than on the velocity itself. If we do this via the condition

$$\mathbf{E}[\dot{v}(t)]^2 = \int_0^\infty \lambda^2\,dF(\lambda) \leq C_1,$$

we will get a modification of the previous variational problem. The solution is simply found by using Neyman–Pearson's lemma. Put

$$\begin{cases} l(\lambda) = \dfrac{\varkappa(\lambda)}{\lambda^2}, \\ l = \max\limits_{\lambda} l(\lambda). \end{cases}$$

Then, $\sigma^2_{\text{opt}} = l\cdot C_1$, and the optimum is realized by locating all the variation C_1 in the point or points where $l(\lambda)$ attains its maximal value l. This follows from

$$\sigma^2 = \int_0^\infty \varkappa(\lambda)\,dF(\lambda) \leq l\int_0^\infty \lambda^2\,dF(\lambda) \leq lC_1.$$

The equality sign is realized in the way just mentioned. The form of the trajectory is easy to calculate.

A still more realistic formulation of the problem may be obtained by *restricting both the velocity and the acceleration* by the conditions

$$\int_0^\infty \varkappa(\lambda)\,dF(\lambda) = \max_F,$$

$$\text{variance of the velocity} = \int_0^\infty dF(\lambda) \leq C,$$

$$\text{variance of the acceleration} = \int_0^\infty \lambda^2\,dF(\lambda) \leq C_1.$$

This is a combination of the two previous formulations. A simple variational argument is needed to solve the extremal problem. Let us denote by $s(F)$ the *support* of F: the set of all points λ for which the increments $F(\lambda+\varepsilon) - F(\lambda-\varepsilon) > 0$ for every positive ε. It is seen that $s(F)$ is a closed set, and it describes the frequencies used by E when he forms the velocity function $y(t)$ from harmonic components.

Let us assume that three different frequencies $\lambda_1, \lambda_2, \lambda_3 \in s(F)$. Choose a small positive number ε, and change

$F(\lambda)$ in the (disjoint) intervals $I_n = (\lambda_n - \varepsilon, \lambda_n + \varepsilon)$; $n = 1, 2, 3$; the spectral energy in these intervals should be increased by the amounts ηx_n, where

$$\begin{cases} x_1 + x_2 + x_3 = 0, \\ \lambda_1^2 x_1 + \lambda_2^2 x_2 + \lambda_3^2 x_3 = 0. \end{cases}$$

This means that the integrals appearing in the kinematic restrictions are little affected if ε is small enough. If η is small enough, we still have $\Delta F(I_n) + \eta x_n \geq 0$, so that the new function is still non-decreasing. In order that $F(\lambda)$ shall be the solution, we must have

$$\varkappa(\lambda_1)\, x_1 + \varkappa(\lambda_2)\, x_2 + \varkappa(\lambda_3)\, x_3 = 0.$$

Otherwise, we could increase the value of

$$\int_0^\infty \varkappa(\lambda)\, dF(\lambda)$$

by replacing ΔF by $\Delta F + \eta x$ in each of the three intervals and leaving F unchanged elsewhere. But this implies that the third relation must be a linear combination of the two first ones,

$$\varkappa(\lambda_n) = a + b\lambda_n^2, \quad n = 1, 2, 3.$$

If we determine the constants a, b from the conditions for $n = 1, 2$, we get

$$\begin{cases} a = \dfrac{\lambda_2^2 \varkappa(\lambda_1) - \lambda_1^2 \varkappa(\lambda_2)}{\lambda_2^2 - \lambda_1^2}, \\ b = \dfrac{\varkappa(\lambda_2) - \varkappa(\lambda_1)}{\lambda_2^2 - \lambda_1^2}, \end{cases}$$

or

$$\varkappa(\lambda) = \frac{\lambda_2^2 \varkappa(\lambda_1) - \lambda_1^2 \varkappa(\lambda_2) + [\varkappa(\lambda_2) - \varkappa(\lambda_1)]\, \lambda^2 + [\varkappa(\lambda_2) - \varkappa(\lambda_1)]\, \lambda^2}{\lambda_2^2 - \lambda_1^2}.$$

This equation should be satisfied for $\lambda = \lambda_1, \lambda_2, \lambda_3$. Assume that $s(F)$ consists of at least two points λ_1, λ_2; the opposite case could be dealt with directly. Since the above relation must hold for every $\lambda \in s(F)$, and since F has no variation outside $s(F)$, we get

$$\int_0^\infty \varkappa(\lambda)\, dF(\lambda) = a \int_0^\infty dF(\lambda) + b \int_0^\infty \lambda^2\, dF(\lambda) \leq aC + bC_1.$$

The equality sign can be realized if $s(F)$ contains some point $\leq (C_1/C)^{\frac{1}{2}}$. Then we should determine λ_1 and λ_2 such that they maximize

$$\frac{C[\lambda_2^2 \varkappa(\lambda_1) - \lambda_1^2 \varkappa(\lambda_2)] + C_1[\varkappa(\lambda_2) - \varkappa(\lambda_1)]}{\lambda_2^2 - \lambda_1^2}$$

with $\min(\lambda_1, \lambda_2) \leq (C_1/C)^{\frac{1}{2}}$. We have thus reduced the problem to a finite-dimensional maximum problem. While this may present some minor numerical difficulties, it is clear that it is simple in principle.

During the above discussion we have assumed implicitly that $\sup \int_0^\infty \varkappa(\lambda)\, dF(\lambda)$ is realized by some F. That this is so, follows from the fact that the condition $\int_0^\infty \lambda^2\, dF(\lambda) \leq C_1$ implies that the set of spectral distribution functions at our disposal is weakly compact: no spectral energy can "escape to infinitely high frequencies" when considering all these F. From every sequence of F we can pick out a weakly convergent subsequence, and this proves the assertion.

Situations where we introduce more side conditions can be dealt with by a direct generalization of the above.

4.3. *A Modification of the Previous Problem*

Let us now return for a moment to the situation with the only restriction $\int_0^\infty dF(\lambda) \leq C$. It is quite natural to use the linear, first order predictor that was suggested, but it may be argued that one should not choose the predicted value of E_{n+1} all the way $E_n - E_{n-1}$ from the last observed value E_n. Instead, P may do better by using the modified predictor

$$E_{n+1}^* = E_n + k(E_n - E_{n-1}) + v(1 - k),$$

where k is some constant to be chosen, presumably in the interval $(0, 1)$. The last term has been added to make the predictor unbiased. The error of prediction is then

$$\begin{aligned} \sigma_k^2 &= \mathbf{E}(E_{n+1} - E_{n+1}^*)^2 \\ &= \mathbf{E}\left\{\int_n^{n+1} [v + y(s)]\, ds - k \int_{n-1}^n [v + y(s)]\, ds - v(1 - k)\right\}^2 \\ &= \mathbf{E}\left\{\int_n^{n+1} y(s)\, ds - k \int_{n-1}^n y(s)\, ds\right\}^2. \end{aligned}$$

Proceeding as before, we get

$$\sigma_k^2 = \int_0^\infty \varkappa_k(\lambda)\, dF(\lambda),$$

where $\qquad \varkappa_k(\lambda) = \alpha(\lambda) + k\beta(\lambda) + k^2\gamma(\lambda),$

with

$$\begin{cases} \alpha(\lambda) = \gamma(\lambda) = \dfrac{2(1 - \cos\lambda)}{\lambda^2}, \\ \beta(\lambda) = \dfrac{2(1 - 2\cos\lambda + \cos 2\lambda)}{\lambda^2} = -\dfrac{4\cos\lambda(1 - \cos\lambda)}{\lambda^2}. \end{cases}$$

Introduce the quantities

$$\left.\begin{aligned} \alpha = \gamma &= 2\int_0^\infty \frac{1 - \cos\lambda}{\lambda^2}\, dF(\lambda), \\ \beta &= 2\int_0^\infty \frac{1 - 2\cos\lambda + \cos 2\lambda}{\lambda^2}\, dF(\lambda). \end{aligned}\right\}$$

The possible positions of the point (α, β) in the plane,

when $\int_0^\infty dF(\lambda) \leq C$, form a region D. Apparently, D is convex and compact. Further, for any probability distribution function $K(k)$ of the parameter k in $(0, 1)$, introduce the moments

$$\mu_i = \int_0^1 k^i \, dK(k).$$

The point (μ_0, μ_1, μ_2) is situated in some convex and compact region F. The reader may note that the concept of moment spaces could be used here, but we shall assume no knowledge of this concept. The payoff becomes simply $\alpha\mu_0 + \beta\mu_1 + \gamma\mu_2$. Hence, optimal strategies exist, say F and (μ_0, μ_1, μ_2). The latter must correspond to a pure strategy since, if μ_0 and μ_1 have been fixed, we have

$$\frac{\mu_2}{\mu_0} \geq \left(\frac{\mu_1}{\mu_0}\right)^2.$$

Here equality holds for that pure strategy where $K(k)$ has all its variation in the point $k = \mu_1/\mu_0$. To get the payoff as small as possible we shall make μ_2 as small as possible, since its coefficient, γ, is positive. We can write down an algorithm for determining F and k. Compute $\varkappa_k(\lambda)$ and its maximum $\varkappa_k$ attained at $\lambda = \lambda_k$. Choose k such that $\varkappa_k$ is made a minimum

$$\left.\begin{aligned} \min_k \varkappa_k &= \varkappa_{k_0}, \\ \lambda_{\text{opt}} &= \lambda_{k_0}. \end{aligned}\right\}$$

The optimal prediction constant is then $k = k_0$, and the velocity should be chosen as

$$E_t = v + \sqrt{C} \cos(t\lambda_{\text{opt}} + \varphi).$$

It has the same form as before, but with a different frequency.

We can write $\varkappa_k(\lambda)$ as a function of two variables, k and λ:

$$\varkappa_k(\lambda) = \frac{2(1 - \cos\lambda)}{\lambda^2}[(1 + k^2) - 2k\cos\lambda].$$

$$\frac{\partial\varkappa}{\partial k} = \frac{4(1 - \cos\lambda)}{\lambda^2}[k - \cos\lambda] = 0 \quad \text{if} \quad \cos\lambda = k.$$

$$\frac{\partial k}{\partial\lambda} = \frac{2\sin\lambda}{\lambda^2}[(1 + k^2) - 2k\cos\lambda] + \frac{2(1 - \cos\lambda)}{\lambda^2} \cdot 2k\sin\lambda$$

$$- \frac{4(1 - \cos\lambda)}{\lambda^3}[(1 + k^2) - 2k\cos\lambda].$$

After introducing $k = \cos\lambda$ into the latter expression, it will vanish either if $\lambda = 0$, or if λ satisfies

$$\lambda = \frac{2\sin\lambda}{1 + 3\cos\lambda}.$$

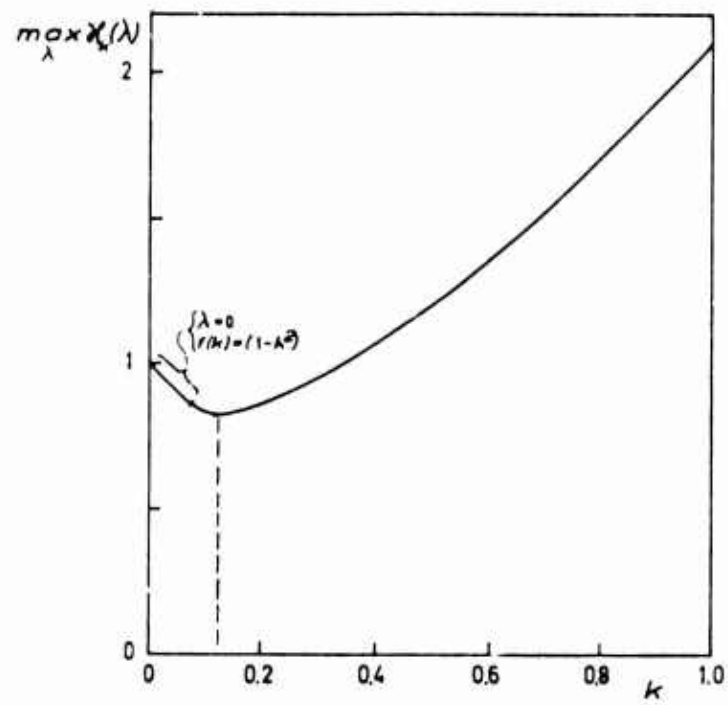

Fig. 13. $\max_\lambda \varkappa_k(\lambda)$ as a function of k.

This equation can be solved graphically, yielding $\lambda_{\text{opt}} \approx 1.4465$, $k_0 \approx 0.1240$, and $\min_k \max_\lambda \varkappa_k(\lambda) \approx 0.8245$.

Fig. 13 shows $\max_\lambda \varkappa_k(\lambda)$ as a function of k. For $k < (7 - 4\sqrt{3}) \approx 0.07180$, the maximum occurs for $\lambda = 0$ and is of the simple form $(1 - k^2)$. For k exceeding that value, the function first decreases to a minimum 0.8245 for $k = k_0$ and then increases again to 2.1002 for $k = 1$.

4.4 *Other Types of Restriction*

In certain problems one might prefer to introduce the restrictions on velocities, accelerations, etc., in a different way. Instead of restricting their mean square, one may prefer to restrict their absolute values. It is clear that this could lead to a more realistic treatment, but also that it requires a more detailed specification of the stochastic processes involved. It will no longer be sufficient to describe the covariance function. To show how this can be done we shall study a special case of some importance.

We can always neglect the presence of a constant and known velocity component, since such a component can be taken into account through a simple correction term. Let us assume that E uses *all* of the remaining variation, so that $v(t)$ takes only the two values $\pm v$. We assign the probability p to the plus sign and the probability $q = 1 - p$ to the minus sign. Denote by t_{n-1}, t_n, t_{n+1} the points of time when $v(t)$ can (but need not) change sign. We shall assume that in each interval $I_n = (t_{n-1}, t_n)$, we choose one of the two signs independently of what happened in the other intervals. We also assume that the length $\tau_n = t_{n+1} - t_n$ are stochastically independent and have the common distribution function $F(x)$. Such a point process is called a renewal

process. That particular point process where $F(x)$ is an exponential distribution is well known and can be treated because of its Markovian property. There is no reason, however, to limit ourselves to that process. In order that our process shall be completely specified, we must also start it off by choosing a probability distribution $G(x)$ for the time between $t=0$ and the next random point among the t_n. We deal only with stationary processes here, and then it is known from the general theory of renewal processes that

$$G(y)=\frac{1}{m}\int_0^y [1-F(x)]\,dx,$$

where m is the mean value

$$m=\int_0^\infty x\,dF(x)$$

for the time between two successive points of time t_n, t_{n+1}.

Let us now compute the covariance function

$$r(t)=\mathbf{E}[v(s)\,v(s+t)]=[1-G(t)]\,v^2+G(t)\,v^2(p-q)^2,$$

where the first term on the right-hand side corresponds to the event that no t_n falls in the interval $(s,\ s+t)$, and the second term corresponds to the complementary event. Hence,

$$\frac{r(t)}{v^2}=1-G(t)\,[1-(p-q)^2].$$

If we still use the simple predictor $E^*_{n+1}=E_n+(E_n-E_{n-1})$, we get the error of prediction as before:

$$\sigma^2=\mathbf{E}[E^*_{n+1}-E_{n+1}]^2=\mathbf{E}\left[\int_{n-1}^{n+1} v(t)\,k(t)\,ds\right]^2$$
$$=2\int_0^2 r(u)\,h(u)\,du,$$

with the same meaning for $k(u)$ and $h(u)$. We shall maximize σ^2, i.e., minimize the expression

$$[1-(p-q)^2]\int_0^2 (G(u)\,h(u)\,du.$$

Since the integral is always negative (use the fact that $G(u)$ is non-decreasing and the mean value theorem for integrals), we shall maximize $1-(p-q)^2$, which is done by choosing $p=q=\frac{1}{2}$. The rest of the problem demands a longer but not complicated argument. The function $H(u)=1-G(u)$ has the properties

(a) $H(0)=0$,

(b) $H(u)$ is non-increasing,

(c) $H(u)$ is convex.

Such a function can be represented as

$$H(u)=\int_0^\infty l_a(u)\,d\phi(a).$$

Here we have used the broken linear functions

$$l_a(u)=\begin{cases}1-\dfrac{u}{a}, & 0<u<a,\\ 0, & u\geqslant a,\end{cases}$$

and a distribution function ϕ on the positive real line. To maximize the integral

$$\int_0^2 H(u)\,h(u)\,du=\int_0^2 [1-G(u)]\,h(u)\,du=-\int_0^2 G(u)\,h(u)\,du,$$

we consider

$$\lambda_a=\int_0^2 l_a(u)\,h(u)\,du,$$

which is a continuous function of a tending to zero as a tends to infinity. Denote by a_0 the root (or one of the roots) of the equation $\lambda_a=\max$. We get

$$\int_0^2 H(u)\,h(u)\,du=\int_0^\infty \lambda_a\,d\phi(a)\leqslant\lambda_{a_0},$$

and it is obvious that the maximum λ_{a_0} is realized by placing all the mass of $\phi(a)$ in the point $a=a_0$. If $a>2$, we get

$$\lambda_a=\int_0^2\left(1-\frac{u}{a}\right)h(u)\,du,$$

so that
$$\frac{d\lambda_a}{da}=\frac{1}{a^2}\int_0^2 u\,h(u)\,du<0.$$

If $1<a<2$, we get

$$\lambda_a=\int_0^1(2-3u)\left(1-\frac{u}{a}\right)du+\int_1^a(u-2)\left(1-\frac{u}{a}\right)du,$$

so that

$$a^2\frac{d\lambda_a}{da}=\int_0^1(2u-3u^2)\,du+\int_1^a(u^2-2u)\,du$$
$$=\tfrac{1}{3}(a^3-3a^2+2)<0.$$

Finally, if $0<a<1$, we get

$$\lambda_a=\int_0^a\left(1-\frac{u}{a}\right)(2u-3u^2)\,du,$$

so that

$$a^2\frac{d\lambda_a}{da}=\int_0^a(2u-3u^2)\,du=a^2(1-a)>0.$$

This means that $a_0=1$, and this is the unique value making λ_a a maximum, since $\lambda_0=\lambda_\infty=0$. Under the given conditions the optimal evasive tactics consists in choosing one of the two directions of motion with the

same probability $\frac{1}{2}$ for each, and in choosing the time between successive t_n according to a probability distribution such that

$$H(u) = 1 - G(u) = l_1(u).$$

This means that $G(u) = u$, $0 < u < 1$ and $G(u) = 1$ for $u > 1$. The corresponding form of $F(u)$ is then $F(u) = 0$ for $u < 1$ and $F(u) = 1$ for $u > 1$, so that the times $t_{n+1} - t_n$ should be constant and equal to 1. The only random element in this renewal process is that the initial value t_0 should be chosen from a rectangular distribution. The extrapolation error is

$$\sigma^2 = 2v^2 \int_0^1 (1-u)\, h(u)\, du = v^2.$$

We could pose a game problem here too, but we shall not discuss this any further.

4.5. *Two-dimensional Pursuit—Simple Models*

When we turn to evasive maneuvers in the plane, things become a good deal more difficult. One reason for this is that we have so much more freedom in constructing the models for the motion of E and P. Because of the lot of alternatives, it seems impossible to formulate a theory that is both general and informative. Instead, we will have to limit ourselves to analyzing separate cases, and we shall try to select these so that they illustrate typical situations. Even so, we will meet some analytical problems, some of which seem to merit attention because of their intrinsic interest.

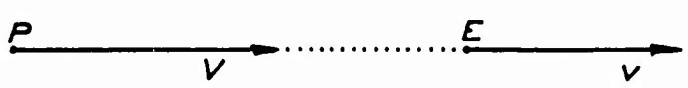

Fig. 14. The simplest two-dimensional case.

Consider the two opponents E and P at the time $t = 0$, when the distance between them is denoted by R. As usual, we denote their maximum speeds by v and V, respectively, with the speed ratio $k = V/v > 1$. If there are no other restrictions on their motion, it is clear that the pursuer will reach the evader after a finite time. The game is definite with the value $R/(V+v)$ if, as before, we use as payoff the time till capture. The optimal behavior is for P to move at maximum speed towards E, and for E to move at maximum speed away from P, see Fig. 14. This simple result can be modified to fit the situation where the two players are restricted to certain regions. It does not seem probable that such results will be of much practical use.

Let us include some more factors in the formulation of the problem. Usually, E tries to reach some target, to steer in a certain direction, etc. Let us say that he

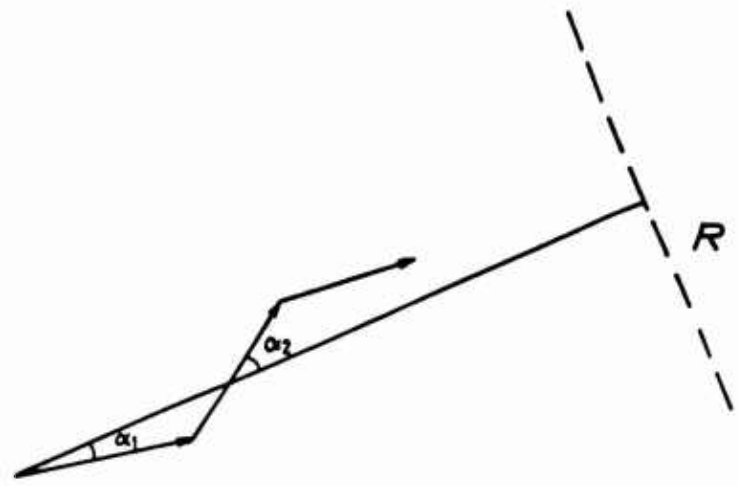

Fig. 15. Constant speed and alternating course.

wants to steer towards some region R in the direction $\alpha = 0$, where α is an angle referred to some fixed direction, see Fig. 15. Suppose he travels at constant speed v, but is exposed to continuous gunfire, bombardment, etc. To avoid being hit he makes turns, $\Delta\alpha_\nu = \alpha_{\nu+1} - \alpha_\nu$, at certain points of time, say, equidistant for simplicity. Under fairly general conditions we can express the probability that a certain salvo (bomb, etc.) hits E as a function $p(\Delta\alpha)$. Usually this function will be decreasing in $|\Delta\alpha|$. E will try to keep down the value of this function. At the same time he wants to keep down the time it takes to reach the target, which means that $\cos^{-1}\alpha$ should be kept as close to 1 as possible. The average number of hits will be proportional to the expression

$$a = \mathrm{E}\left[\frac{1}{\cos\alpha_\nu}\, p(\alpha_{\nu+1} - \alpha_\nu)\right],$$

it should be minimized by E. Supposing the evasive motion to be stationary, we shall minimize

$$a = \int_{x=-\frac{\pi}{2}}^{\frac{\pi}{2}} \int_{y=-\frac{\pi}{2}}^{\frac{\pi}{2}} \frac{1}{\cos x}\, p(x-y)\, dF(x,y)$$

under the condition that the marginal distributions of α_ν and $\alpha_{\nu+1}$ are equal:

$$F(x, \pi/2) - F(x, -\pi/2) = F(\pi/2, x) - F(-\pi/2, x).$$

Here, $F(x,y)$ denotes the joint distribution of α_ν and $\alpha_{\nu+1}$. The minimum is attained if $p(\Delta\alpha)$ is a continuous function.

If we assume instead that the behavior should be reversible in time, so that F is a symmetric distribution, then

$$a = \iint \left[\frac{1}{\cos x} + \frac{1}{\cos y}\right] p(x-y)\, dF(x,y),$$

where the integration shall be carried out over the half square $x < y$, $|x| < \frac{1}{2}\pi$, $|y| < \frac{1}{2}\pi$. To find the minimum,

we consider the point (or points) (x, y) for which

$$\left[\frac{1}{\cos x} + \frac{1}{\cos y}\right] p(x - y) = \min.$$

If (x_0, y_0) is such a point, we get a symmetric distribution F by placing the mass $\frac{1}{2}$ in each of the points (x_0, y_0) and (y_0, x). In other words, the evader steers alternatingly along the course x_0 and the course y_0. The initial direction is chosen among these two with probabilities $\frac{1}{2}$, $\frac{1}{2}$. Note, that this behavior is essentially deterministic. This is because the prediction method of P has been fixed implicitly by the choice of the function $p(\Delta\alpha)$. If the method of prediction is also allowed to vary, we get a game situation, and this will force E to use a truly stochastic behavior.

4.6. *A More General Model—Behavior of the Evader*

We now leave this primitive model of evasive maneuvers and turn to a more general and flexible system. We wish to describe the motion of E when he travels in the plane with the constant speed v but with a (randomly) varying course φ_t. Choose a coordinate system (x_1, x_2) where the x_2 axis will be taken as the average direction of E's motion, see Fig. 16. Choose the origin so that at time $t = 0$, we have $x_1(0) = x_2(0) = 0$.

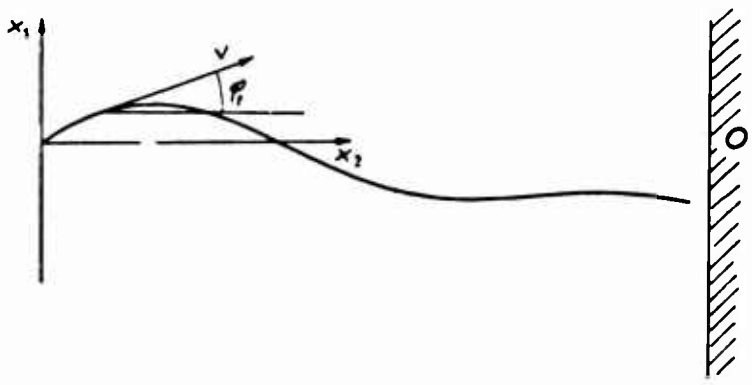

Fig. 16. Constant speed and continuously varying course.

We then have

$$\left.\begin{aligned} x_1(t) &= v \int_0^t \sin \varphi_s \, ds, \\ x_2(t) &= v \int_0^t \cos \varphi_s \, ds. \end{aligned}\right\}$$

The angle φ_s will be considered as a stationary stochastic process written as

$$\varphi_s = \int_{-\infty}^{s} g(s - u) \, d\xi(u),$$

using the predictive representation of the process. Here $\xi(u)$ is a time homogeneous process with independent increment and with the variances $\mathrm{E}[\xi(s) - \xi(t)]^2 = |s - t|$. The function $g(u)$ is real-valued and quadratically integrable. In other words, the evasive maneuvers are governed by a noise generator with the outsignal $\xi(u)$ that is fed into a linear filter with the response function $g(t)$. The outsignal of the filter is the course angle φ_t. For a complete description of the probabilistic structure, we must know the distributions of $\xi(u)$, $-\infty < u < \infty$. The most convenient way to describe such a distribution is to use the characteristic function of $\xi(u)$, which can be written as

$$\psi(z, u) = \mathrm{E}\, e^{iz\xi(u)}.$$

The process $\xi(u)$ being time homogeneous and with independent increment, this can be rewritten as

$$\psi(z, u) = e^{u\gamma(z)},$$

where $\gamma(z)$ is some function of z.

According to the famous theorem of Lévy-Khinchin, one can represent $\gamma(z)$ in terms of a certain integral, but we need not do this here. The only restriction at the moment is that $\xi(u)$ shall have a symmetric distribution, so that $\psi(-z, u) = \overline{\psi(z, u)}$, or $\gamma(-z) = \gamma(z)$. If desired, one can remove this restriction with little difficulty.

The most important special case is when $\xi(u)$ has a normal distribution, so that

$$\left.\begin{aligned} \psi(z, u) &= \exp\left(-u\frac{z^2}{2}\right), \\ \gamma(z) &= -\tfrac{1}{2} z^2. \end{aligned}\right\}$$

We then know that $\xi(u)$ is a continuous function with probability one; actually this case is the only one with this property. It is not differentiable in the usual sense.

Another important case is when $\xi(u)$ changes abruptly with the jumps $\pm\delta$. The distribution of $\xi(u)$ is then composed of two Poisson components

$$\left.\begin{aligned} \psi(z, u) &= \exp\,[u\lambda(e^{i\delta z} - 1)] \exp\,[u\lambda(e^{-i\delta z} - 1)], \\ \gamma(z) &= \lambda(e^{i\delta z} - 1) + \lambda(e^{-i\delta z} - 1) = 2\lambda(\cos \delta z - 1). \end{aligned}\right\}$$

Concerning the response function $g(u)$, a common assumption is to postulate the form

$$g(u) = A e^{-au}.$$

This means that we have an RC filter, corresponding to the differential equation

$$\frac{d\varphi_t}{dt} = -a\varphi_t + A \frac{d\xi(t)}{dt}.$$

Note, that the derivatives appearing in this equation do not exist, but the relation can be interpreted as a stochastic differential equation with no lack of rigor. Sometimes we must represent $g(u)$ by more complicated functions, say, by exponential polynomials correspond-

ing to a higher order, linear stochastic differential equation with constant coefficients.

Using this quite adaptable model we have some hope of describing pursuit situations with some degree of realism. Therefore, we shall examine this model more carefully than the previous ones. First some simple remarks. The velocity components of the stochastic vector $\dot{x}(t) = [\dot{x}_1(t), \dot{x}_2(t)]$ are given by

$$\left.\begin{aligned} \dot{x}_1(t) &= v \sin \varphi_t, \\ \dot{x}_2(t) &= v \cos \varphi_t, \end{aligned}\right\}$$

the length of the vector being $\|\dot{x}(t)\| = v$. The accelerations are

$$\left.\begin{aligned} \ddot{x}_1(t) &= v \cos \varphi_t \dot{\varphi}_t, \\ \ddot{x}_2(t) &= -v \sin \varphi_t \dot{\varphi}_t. \end{aligned}\right\}$$

In the case $g(u) = A e^{-au}$ the accelerations do not exist, but they do generally if $g(u)$ is a higher order exponential polynomial. In that case, $g(0) = 0$, and we get

$$E\|\ddot{x}(t)\|^2 = v^2 E[\dot{\psi}(t)]^2 = \frac{v^2}{2\pi} \int_{-\infty}^{\infty} \lambda^2 |G(\lambda)|^2 \, d\lambda,$$

where we have introduced the Fourier transform

$$G(\lambda) = \int_0^{\infty} e^{iu\lambda} g(u) \, du.$$

It is easy to compute the expected future motion. Since ξ, and hence φ, have symmetric distributions, it follows that $E \sin \varphi_t = 0$. Further,

$$\begin{aligned} \mathbf{E} \cos \varphi_t &= \tfrac{1}{2} \mathbf{E} e^{i\varphi_t} + \tfrac{1}{2} \mathbf{E} e^{-i\varphi_t} \\ &= \tfrac{1}{2} \mathbf{E} \exp \left[i \int_{-\infty}^{t} g(t-u) \, d\xi(u) \right] \\ &\quad + \tfrac{1}{2} \mathbf{E} \exp \left[-i \int_{-\infty}^{t} g(t-u) \, d\xi(u) \right]. \end{aligned}$$

To compute these integrals, we use the fact that the increments $d\xi(u)$ are independent. The multiplicative property of characteristic functions gives us

$$\begin{aligned} \mathbf{E} \cos \varphi_t &= \tfrac{1}{2} \exp \int_{-\infty}^{t} \gamma[g(t-u)] \, du \\ &\quad + \tfrac{1}{2} \exp \int_{\infty}^{t} \gamma[-g(t-u)] \, du \\ &= \exp \int_{-\infty}^{t} \gamma[g(t-u)] \, du \\ &= \exp \int_{0}^{-\infty} \gamma[g(u)] \, du. \end{aligned}$$

Hence,

$$\begin{cases} \mathbf{E}\, x_1(t) \equiv 0, \\ \mathbf{E}\, x_2(t) = v \exp \int_0^{\infty} \gamma[g(u)] \, du. \end{cases}$$

This means that the expected motion is uniform in the direction of the average motion, i.e., the x_2 axis, and its speed is proportional to v. It has been reduced by the factor of proportionality

$$\exp \int_0^{\infty} \gamma[g(u)] \, du.$$

In a similar way, one can determine the covariance matrix of the vector $(\sin \varphi_\alpha, \cos \varphi_\beta)$

$$C = \begin{Bmatrix} C_{11} & C_{12} \\ C_{21} & C_{22} \end{Bmatrix}.$$

We have

$$\begin{aligned} C_{11} &= \mathbf{E} \sin^2 \varphi_\alpha = \tfrac{1}{4} \mathbf{E}[2 - e^{2i\varphi_\alpha} - e^{-2i\varphi_\alpha}] \\ &= \frac{1}{2} \left[1 - \exp \int_0^{\infty} \gamma[2g(u)] \, du \right] \end{aligned}$$

and

$$\begin{aligned} C_{22} &= \mathbf{E} \cos^2 \varphi_\beta - [\mathbf{E} \cos \varphi_\beta]^2 = \tfrac{1}{4} \mathbf{E}[2 + e^{2i\varphi_\beta} + e^{-2i\varphi_\beta}] \\ &\quad - [\mathbf{E} \cos \varphi_\beta]^2 = \frac{1}{2} \left\{ 1 + \exp \int_0^{\infty} \gamma[2g(u)] \, du \right\} \\ &\quad - \exp^2 \int_0^{\infty} \gamma[g(u)] \, du. \end{aligned}$$

Finally, it is clear, because of the symmetry of the distribution of φ_α, that the second order mixed moment $C_{12} = C_{21} = 0$.

Let us calculate the covariance function for $\sin \varphi_s$, say, for $h > 0$.

$$\begin{aligned} R_s(h) &= \mathbf{E} \sin \varphi_s \sin \varphi_{s+h} \\ &= -\tfrac{1}{4} \mathbf{E}[(e^{i\varphi_s} - e^{-i\varphi_s})(e^{i\varphi_{s+h}} - e^{-i\varphi_{s+h}})] \\ &= -\tfrac{1}{4} \exp \int_0^{\infty} \gamma[g(u) + g(h+u)] \, du \exp \int_0^{h} \gamma[g(u)] \, du \\ &\quad + \tfrac{1}{4} \exp \int_0^{\infty} \gamma[g(u) - g(h+u)] \, du \exp \int_0^{h} \gamma[g(u)] \, du \\ &\quad + \tfrac{1}{4} \exp \int_0^{\infty} \gamma[g(u) - g(h+u)] \, du \exp \int_0^{h} \gamma[g(u)] \, du \\ &\quad - \tfrac{1}{4} \exp \int_0^{\infty} \gamma[g(u) + g(h+u)] \, du \exp \int_0^{h} \gamma[g(u)] \, du \\ &= \tfrac{1}{2} \exp \int_0^{h} \gamma[g(u)] \, du \left\{ \exp \int_0^{\infty} \gamma[g(u) - g(h+u)] \, du \right. \\ &\quad \left. - \exp \int_0^{\infty} \gamma[g(u) + g(h+u)] \, du \right\}. \end{aligned}$$

In an analogous manner, one derives for the covariance function of $\cos \varphi_s$

$$\begin{aligned} R_c(h) &= \mathbf{E} \cos \varphi_s \cos \varphi_{s+h} - \exp^2 \int_0^{\infty} \gamma[g(u)] \, du \\ &= \tfrac{1}{4} \mathbf{E}[(e^{i\varphi_s} + e^{-i\varphi_s})(e^{-i\varphi_{s+h}} + e^{-i\varphi_{s+h}})] \end{aligned}$$

$$= \exp^2 \int_0^\infty \gamma[g(u)]\,du$$

$$= \tfrac{1}{2} \exp \int_0^h \gamma[g(u)]\,du \left\{ \exp \int_0^\infty \gamma[g(u) - g(h+u)]\,du \right.$$

$$\left. + \exp \int_0^\infty \gamma[g(u) + g(u+h)]\,du \right\}$$

$$- \exp^2 \int_0^\infty \gamma[g(u)]\,du.$$

These expressions are useful to determine, among other things, the dispersion of the future positions of E:

$$\mathbf{E}\,\|x(t) - \mathbf{E}x(t)\|^2 = \mathbf{E}\,[x_1(t) - \mathbf{E}x_1(t)]^2 + \mathbf{E}\,[x_2(t) - \mathbf{E}x_2(t)]^2$$

$$= v^2 \int_0^t \int_0^t [R_c(u-s) + R_s(u-s)]\,du\,ds$$

$$= 2v^2 \int_0^t [R_c(u) + R_s(u)]\,(t-u)\,du.$$

4.7. *Linear Predictors*

Now let us study what happens when P observes E at equidistant times $t = \ldots, n-1, n, \ldots$, and predicts E_{n+1} with the formula

$$E^*_{n+1} = E_n + (E_n - E_{n-1}) = 2E_n - E_{n-1}.$$

This means that he uses the vector analog of a simple-prediction formula that we have discussed. As mentioned above, this is an approximation to the usual plotting procedure. We can determine the prediction error by starting from the relation

$$\frac{1}{v^2}\,\|E_{n+1} - E^*_{n+1}\| = \left[\int_n^{n+1} \cos\varphi_t\,dt - \int_{n-1}^n \cos\varphi_t\,dt\right]^2$$

$$+ \left[\int_n^{n+1} \sin\varphi_t\,dt - \int_{n-1}^n \sin\varphi_t\,dt\right],$$

so that, as in the preceding section,

$$\frac{1}{v^2}\mathbf{E}\,\|E_{n+1} - E^*_{n+1}\|^2 = \frac{1}{v^2}\,\sigma^2$$

$$= \frac{v^2}{2} \int_0^2 h(u)\,[R_c(u) + R_s(u)]\,du,$$

with the same function $h(u)$. We get the extremal problem

$$I = \int_0^2 h(u)\,R(u)\,du = \max,$$

where

$$R(u) = \exp\left[\int_0^u \gamma[g(v)]\,dv\right]$$

$$\times \exp\left[\int_0^\infty \gamma[g(v) - g(u+v)]\,dv\right] - \text{const.}$$

The variance $\int_0^\infty g^2(v)\,dv$ is supposed to be fixed in advance, and γ and g are the functions described before. In the expression for R, we have left out the constant mean value term, since this would not effect the value of I, as a consequence of $\int_0^2 h(u)\,du = 0$.

The most important case is perhaps that where the guidance signals are normally distributed. The expression then reduces to

$$R(u) = \exp - \tfrac{1}{2}\left\{\int_0^u g^2(v)\,dv + \int_0^\infty g^2(v)\,dv\right.$$

$$\left. + \int_u^\infty g^2(v)\,dv - 2\int_0^\infty g(v)\,g(v+u)\,dv\right\}.$$

Introducing

$$\left.\begin{aligned} V &= \int_0^\infty g^2(v)\,dv, \\ \varrho(u) &= \frac{1}{V}\int_0^\infty g(v)\,g(u+v)\,dv, \end{aligned}\right\}$$

it is easy to verify that V is the variance and $\varrho(u)$ the correlation function of the stochastic process φ_t. Thus

$$I = I(\varrho) = \int_0^2 h(u) \exp\{V[\varrho(u) - 1]\}\,du.$$

The reader may find it instructive to derive this formula directly, without using the predictive representation of the φ_t process.

The extremal problem may not be easy to solve completely by analytical methods. However, we can say something about the solution. First we must be sure that the maximum can really be attained. We can write, using Bochner's theorem about positive definite functions,

$$\varrho(u) = \int_0^\infty \cos u\lambda\,dF(\lambda).$$

Here, $F(\lambda)$ is a distribution on the positive half-axis. The set of F functions is not compact, so that we do not arrive directly at the desired conclusion. An additional argument is needed, and we put

$$\sup_\varrho I(\varrho) = I.$$

There is a sequence $\varrho_1(u), \varrho_2(u), \ldots$, with the corresponding distribution functions $F_1(\lambda), F_2(\lambda), \ldots$, such that $I(\varrho_n) \to I = \sup I(\varrho)$. It is always possible to select a subsequence $F_{n_1}(\lambda), F_{n_2}(\lambda), \ldots$, converging to a bounded non-decreasing function $G(\lambda)$ for every finite λ. The variation $G(+\infty) - G(0) \leq 1$, but we cannot exclude the inequality sign directly. However,

$$e^V I(\varrho_{n_i}) = \int_0^2 h(u) \exp[V\varrho_{n_i}(u)]\,du = \sum_{\nu=0}^\infty \frac{1}{\nu!}\,V^\nu C_\nu,$$

with $$C_\nu = \int_0^\infty \varkappa(\lambda)\, dF_{n_i}^{\nu *}(\lambda).$$

Since $\varkappa(\lambda) \geq 0$, it follows that no mass of the $F_{n_i}(\lambda)$ can flow out toward $+\infty$, since this would make the C_ν, and hence $I(\varrho_{n_i})$, smaller than necessary. Here we have used the fact that $\varkappa(\lambda)$ decreases to zero when λ tends to $+\infty$. Thus, $F_{n_i}(\lambda)$ converges weakly, and $G(\lambda)$ is an ordinary distribution function, so that $G(+\infty) - G(0) = 1$, and $G(\lambda)$ realizes the maximum of $I(\varrho)$. It is tempting to use convexity arguments to show that the maximum is unique, but this has not been done.

We can characterize qualitatively the distribution function $F(\lambda)$ that realizes the maximum. Let $s(F)$ be the support of $F(\lambda)$. We now use the same sort of variational argument as before (p. 15 ff.). If λ_1, λ_2 are two arbitrary points in $s(F)$, and $F_\varepsilon(\lambda)$ has been modified in the neighbourhood of λ_1 and λ_2, we must have

$$I(F) \geq I(F_\varepsilon)$$

$$= I(F) + \varepsilon V \left\{ \int_0^2 h(u) \cos \lambda_1 u \exp\{V[\varrho(u) - 1]\}\, du - \int_0^2 h(u) \cos \lambda_2 u \exp\{V[\varrho(u) - 1]\}\, du \right\} + o(\varepsilon).$$

Hence,

$$\int_0^2 h(u) \cos \lambda u \exp\{V[\varrho(u) - 1]\}\, du = C \text{ constant, all } \lambda \in s(F).$$

But the left side is an entire function of λ. If $s(F)$ has an accumulation point in the finite part of the λ axis, the function on the left must be identically equal to C. Since this is impossible, it follows that the support of F is discrete: the optimum spectral distribution function has all its mass in a finite or denumerable set of frequencies $\lambda_1, \lambda_2, \ldots$. The corresponding point masses will be denoted by $F_1, F_2, \ldots, \sum F_\nu = 1$. The correlation function has the form

$$\varrho(u) = \sum_\nu F_\nu \cos \lambda_\nu u.$$

It may be noted that if the λ are infinitely many, so that $\lambda = +\infty$ is an accumulation point, it follows from the Riemann-Lebesgue lemma that $C = 0$.

If V is small, we have approximately

$$I(\varrho) \simeq V \int_0^2 h(u)\, \varrho(u)\, du.$$

This leads to the same maximum problem that we solved in a previous place. Expanding the exponential function in series, we get an expression for the error.

If V is large, we use the expression

$$I(\varrho) = \sum_{\nu=0}^{\infty} p_\nu \int_0^2 \varrho^\nu(u)\, h(u)\, du,$$

where p_ν is the Poisson probability $(V^\nu/\nu!)\, e^{-V}$, and ϱ^ν corresponds to the νth convolution $\varrho^{*\nu}(\lambda)$. But the relative concentration of the Poisson distribution increases with V, and we can therefore expect to get an almost optimal solution by placing all the mass of $F(\lambda)$ in the frequency λ_{opt}/V, where λ_{opt} was the value determined in section 4.3; note, that V is the mean value of the Poisson distribution.

If V is in the intermediate range, we must compute the solution numerically. This is not a task of routine character and presents considerable difficulty. Both the analytical and the numerical problem seem to deserve more attention.

4.8. *Non-linear Predictors*

In this discussion we have assumed, so far, that the method of prediction had been fixed in advance. Actually, we used a highly specialized linear predictor of the first order. Now we turn the problem around and look for the best predictor (linear or not) when he stochastic properties of the evasion are given. Surprisingly in this case the *non-linear* prediction problem can be solved.

With the same notations as before, we assume that the vector process $x(t)$ has been observed in the past, $-\infty < t \leq 0$. We want to determine the best predictor $x^*(h)$ in the sense of the least squares criterion of the future value $x(h)$, $h > 0$. Using our observations, we can reconstruct φ_t and ξ_t for $t \leq 0$. The optimal predictor, the regression, is always the conditional expected value of the future value given the past observations. Using the notation $\mathbf{E}_0$ for the conditional expected value operator defined by

$$\mathbf{E}_0 z = \mathbf{E}\{z \mid x_s \text{ observed for } s \leq 0\},$$

we get

$$\left.\begin{aligned} x_1^*(h) &= v\mathbf{E}_0 \int_0^h \sin \varphi_t\, dt = v \int_0^h \mathbf{E}_0 \sin \varphi_t\, dt, \\ x_2^*(h) &= v\mathbf{E}_0 \int_0^h \cos \varphi_t\, dt = v \int_0^h \mathbf{E}_0 \cos \varphi_t\, dt. \end{aligned}\right\}$$

But,

$$\mathbf{E}_0 e^{iz\varphi_t} = \mathbf{E}_0 \exp iz \left[\int_{-\infty}^0 g(t-u)\, d\xi(u) + \int_0^t g(t-u)\, d\xi(u) \right]$$

$$= \exp\left[iz \int_{-\infty}^0 g(t-u)\, d\xi(u) \right] \mathbf{E} \exp\left[iz \int_0^t g(t-u)\, d\xi(u) \right]$$

$$= \exp\left[iz \int_{-\infty}^0 g(t-u)\, d\xi(u) \right] \exp\left[\int_0^t \gamma[z\, g(t-u)]\, du \right].$$

This gives us

$$\left.\begin{aligned} \mathbf{E}_0 \sin \varphi_t &= \gamma_t \sin \varphi_t^*, \\ \mathbf{E}_0 \cos \varphi_t &= \gamma_t \cos \varphi_t^*, \end{aligned}\right\}$$

where we have introduced

$$\gamma_t = \exp \int_0^t \gamma[g(t-u)]\, du$$

and the optimal *linear* predictor φ_t^* of the course angle φ_t

$$\varphi_t^* = E_0 \varphi_t = \int_{-\infty}^0 g(t-u)\, d\xi(u).$$

The function γ_t tells us with what speed the predicted point $x^*(t)$ moves when t varies.

The minimum prediction error can be calculated in the same way that we got the covariances. The calculations are a bit cumbersome, and it will be enough to show how it is done for the normal distributions. We get

$$\begin{aligned} \frac{1}{v^2} \mathbf{E}\|x(h) - x^*(h)\|^2 &= \frac{1}{v^2} \mathbf{E}[x_1(h) - x_1^*(h)]^2 \\ &\quad + \frac{1}{v^2} \mathbf{E}[x_2(h) - x_2^*(h)]^2 \\ &= \int_0^h \int_0^h \mathbf{E}(\sin \varphi_s - \gamma_s \sin \varphi_s^*)(\sin \varphi_t - \gamma_t \sin \varphi_t^*)\, ds\, dt \\ &\quad + \int_0^h \int_0^h \mathbf{E}(\cos \varphi_s - \gamma_s \cos \varphi_s^*)(\cos \varphi_t - \gamma_t \cos \varphi_t^*)\, ds\, dt \\ &= \int_0^h \int_0^h \mathbf{E} \cos(\varphi_s - \varphi_t)\, ds\, dt \\ &\quad + \int_0^h \int_0^h \gamma_s \gamma_t \mathbf{E} \cos(\varphi_s^* - \varphi_t^*)\, ds\, dt \\ &\quad - \int_0^h \int_0^h \gamma_s \mathbf{E} \cos(\varphi_s^* - \varphi_t)\, ds\, dt \\ &\quad - \int_0^h \int_0^h \gamma_t \mathbf{E}(\cos \varphi_s - \varphi_t^*)\, ds\, dt. \end{aligned}$$

Now we use the normality. If x is normally distributed $= N(0, \sigma)$, we have the elementary relation

$$\mathbf{E} \cos x = \tfrac{1}{2} \mathbf{E}(e^{ix} + e^{-ix}) = e^{-\frac{1}{2}\sigma^2}.$$

Hence, in our case,

$$\frac{1}{v^2} \mathbf{E}\|x(h) - x^*(h)\|^2 = \int_0^h \int_0^h K(s,t)\, ds\, dt,$$

where the symmetric integral kernel $K(s,t)$ is given for $s \leq t$ by the expression

$$\begin{aligned} K(s,t) &= \mathbf{E} \cos(\varphi_s - \varphi_t) + \gamma_s \gamma_t \mathbf{E} \cos(\varphi_s^* - \varphi_t^*) \\ &\quad - \gamma_s \mathbf{E} \cos(\varphi_s^* - \varphi_t) - \gamma_t \mathbf{E} \cos(\varphi_s - \varphi_t^*). \end{aligned}$$

Here we have

$$\begin{aligned} \varphi_s - \varphi_t &= \int_{-\infty}^s g(s-u)\, d\xi(u) - \int_{-\infty}^t g(t-u)\, d\xi(u) \\ &= \int_{-\infty}^s [g(s-u) - g(t-u)]\, d\xi(u) - \int_s^t g(t-u)\, d\xi(u). \end{aligned}$$

The terms in the last expression are independent, and their variances can thus be added, giving the variance of $\varphi_s - \varphi_t$ as

$$\operatorname{var}(\varphi_s - \varphi_t) = \int_{-\infty}^s [g(s-u) - g(t-u)]^2\, du + \int_0^{t-s} g^2(v)\, dv.$$

The first term of $K(s,t)$ is therefore

$$\begin{aligned} \mathbf{E} \cos(\varphi_s - \varphi_t) &= \exp\left\{-\frac{1}{2} \int_{-\infty}^s [g(s-u) - g(t-u)]^2\, du\right\} \\ &\quad \times \exp\left\{-\frac{1}{2} \int_0^{t-s} g^2(v)\, dv\right\}. \end{aligned}$$

The remaining terms are computed analogously, and we get

$$\begin{aligned} K(s,t) &= \exp\left(-\frac{1}{2} \int_{-\infty}^s [g(t-u) - g(s-u)]^2\, du\right) \\ &\quad \times \exp\left(-\frac{1}{2} \int_0^{t-s} g^2(u)\, du\right) \\ &\quad + \exp\left(-\frac{1}{2} \int_{-\infty}^0 [g(t-u) - g(s-u)]^2\, du\right) \\ &\quad \times \exp\left(-\frac{1}{2} \int_0^t g^2(t-u)\, du\right) \\ &\quad \times \exp\left(-\frac{1}{2} \int_0^s g^2(s-u)\, du\right) \\ &\quad - \exp\left(-\frac{1}{2} \int_{-\infty}^0 [g(t-u) - g(s-u)]^2\, du\right. \\ &\quad \times \exp\left(-\frac{1}{2} \int_0^t g^2(t-u)\, du\right) \\ &\quad \times \exp\left(-\frac{1}{2} \int_0^s g^2(s-u)\, du\right) \\ &\quad - \exp\left(-\frac{1}{2} \int_{-\infty}^0 [g(t-u) - g(s-u)]^2\, du\right) \\ &\quad \times \exp\left(-\frac{1}{2} \int_0^s g^2(s-u)\, du\right) \\ &\quad \times \exp\left(-\frac{1}{2} \int_0^t g^2(t-u)\, du\right). \end{aligned}$$

The last three terms in this expression are equal, one of them with positive sign and the other two with negative. Their sum is therefore equal to one of them with negative sign.

The first term can be written

$$\exp\left\{-\frac{1}{2}\left[\int_{-\infty}^{t} g^2(t-u)\,du + \int_{-\infty}^{s} g^2(s-u)\,du + \int_0^{t-s} g^2(v)\,dv\right] + \int_{-\infty}^{s} g(t-u)\,g(s-u)\,du\right\}$$

$$= \exp\left\{-\frac{1}{2}\left[\int_{t-s}^{s} g^2(v)\,dv + \int_0^{\infty} g^2(v)\,dv + \int_0^{t-s} g^2(v)\,dv\right] + \int_{-\infty}^{\infty} g(t-u)\,g(s-u)\,du\right\}$$

$$= \exp\left\{-\int_0^{\infty} g^2(v)\,dv + \int_{-\infty}^{s} g(t-u)\,g(s-u)\,du\right\}.$$

The other term is

$$-\exp\left\{-\frac{1}{2}\left[\int_{-\infty}^{0} g^2(t-u)\,du + \int_{-\infty}^{0} g^2(s-u)\,du + \int_0^{t} g^2(t-u)\,du + \int_0^{s} g^2(s-u)\,du\right] + \int_{-\infty}^{s} g(t-u)\,g(s-u)\,du\right\}$$

$$= -\exp\left\{-\int_0^{\infty} g^2(v)\,dv + \int_{-\infty}^{0} g(t-u)\,g(s-u)\,du\right\}.$$

Introducing for the variance the notation

$$V = \int_0^{x} g^2(x)\,dx,$$

we get

$$K(s,t) = e^{-V}\left[\exp\int_{-\infty}^{s} g(t-u)\,g(s-u)\,du - \exp\int_{-\infty}^{0} g(t-u)\,g(s-u)\,du\right]$$

$$= \exp\left[-V + \int_{-\infty}^{0} g(t-u)\,g(s-u)\,du\right] \times \left[\exp\left\{\int_0^{s} g(t-u)\,g(s-u)\,du\right\} - 1\right].$$

We now turn to the extremal problem of determining the maximum of

$$K = \int_0^h \int_0^h K(s,t)\,ds\,dt = \frac{1}{v^2}\,\mathbf{E}\,\|x(h) - x^*(h)\|^2$$

when the value of V is given. The kernel K depends in a non-linear way on the unknown function $g(t)$. It may be of interest to observe that if the evasive maneuvers are not too large, so that the linear approximation is applicable, we get the same problem, but with the kernel

$$K_1(s,t) = \int_0^{\min(s,t)} g(t-u)\,g(s-u)\,du.$$

For this problem there is an attractive method of solution, and we shall discuss this possibility. We have

$$K_1 = \int_0^h \int_0^h K_1(s,t)\,ds\,dt = \int_0^h \int_0^h \int_0^{\min(s,t)} g(t-u)\,g(s-u)\,du\,ds\,dt.$$

The region of integration is bounded by the five planes

$$s = u, \quad s = h,$$
$$t = u, \quad t = h,$$
$$u = 0.$$

We introduce $s - u = x$ and $t - u = y$. The Jacobian is 1, and the boundaries are transformed to

$$x = 0, \quad x = h - u,$$
$$y = 0, \quad y = h - u,$$
$$u = 0.$$

Thus, u lies between zero and $H(x,y) = \min(h - x, h - y)$, whereas x and y both lie between 0 and h, giving

$$K_1 = \int_0^h \int_0^h \int_0^{H(x,y)} du\,g(x)\,g(y)\,dx\,dy = \int_0^h \int_0^h H(x,y)\,g(x)\,g(y)\,dx\,dy.$$

Let λ be the largest eigenvalue of the integral equation

$$\lambda\gamma(x) = \int_0^h H(x,y)\,\gamma(y)\,dy,$$

and $\gamma(x)$ a corresponding eigenfunction normalized so that

$$\int_0^h \gamma^2(x)\,dx = V.$$

Under the side condition $\int_0^\infty g^2(t)\,dt = V$, we have

$$K_1(g) \leq \lambda V = K_1(\gamma)$$

for an arbitrary $g(t)$ of predictive type.

On the other hand, if $\gamma(x)$ is the eigenfunction mentioned above (whether it is of predictive type or not), the prediction error is at least equal to $K_1(\gamma)$ according to traditional prediction theory. The optimal evasive tactics is then realized by the function $\gamma(x)$. It is easy to calculate $\gamma(x)$. Indeed, the integral equation can be written

$$\lambda\gamma(x) = (h - x)\int_0^x \gamma(y)\,dy + \int_x^h (h - y)\,\gamma(y)\,dy,$$

which after two differentiations becomes

$$\lambda\gamma''(x) + \gamma(x) = 0,$$

so that $$\gamma(x) = Ae^{ix\varkappa} + Be^{-ix\varkappa},$$

with $\varkappa^2 = 1/\lambda$. This function satisfies the integral equation only if $\cos \varkappa h = 0$, i.e., the eigenvalues are

$$\lambda_k = \frac{4h^2}{(2k+1)^2\pi^2}, \quad k = 0, \pm 1, \pm 2, \ldots,$$

and hence, $$\lambda = \max_k \lambda_k = \frac{4h^2}{\pi^2},$$

and $$\gamma(x) = \begin{cases} C \cos \dfrac{\pi}{2h} x, & 0 < x < h, \\ 0 & \text{otherwise.} \end{cases}$$

The constant C should be chosen so that $\|\gamma\|^2$ equals the given value of V. The corresponding covariance function is given by

$$r(t) = \int_{-\infty}^{0} g(t-u)\, g(-u)\, du = C^2 \int_{-h+t}^{0} \cos \frac{\pi}{2h}$$

$$\times (t-u) \cos \frac{\pi}{2h} u\, du = \frac{C^2}{2}\left[(h-t) \cos \frac{\pi}{2h} t\right],$$

for $0 < t < h$. It is represented graphically for $C^2 = 2$, $h = 1$ in Fig. 17.

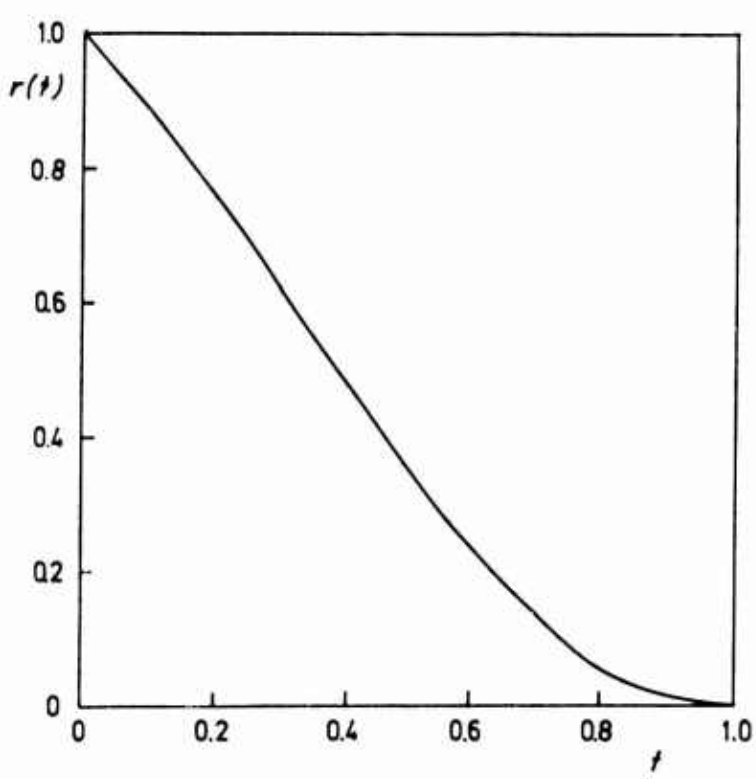

Fig. 17. The covariance function $r(t)$.

The optimal evasive tactics against the optimal prediction is then the one generated by a normal process with the given covariance function.

It is natural to ask if this game situation is definite. Let us investigate the problem in slightly more general terms. Let $a(t)$ be a given continuous function defined on the interval $(0, h)$ and form the stochastic variable

$$A_\varphi = \int_0^1 a(t)\, \varphi_t\, dt.$$

After having observed the stochastic process φ_t for $t < 0$, we want to predict the value of $A\varphi$ with the best linear predictor $p\varphi$. Consider the game with the payoff function $B(\varphi, p) = \|A\varphi - p\varphi\|^2 = E[A\varphi - p\varphi]^2$, where φ_t is a stationary process with finite variance, say, equal to 1.

In the problem that we have just met we had $a(t) \equiv 1$, and we had determined $\max_\varphi \min_p B(\varphi, p)$, which turned out to be the largest eigenvalue of a certain integral equation. In the present case we should find the largest eigenvalue of the equation

$$\lambda\gamma(x) = \int_0^h H(x, y)\, \gamma(y)\, dy,$$

with the symmetric kernel

$$H(x, y) = \int_0^{\min(h-x,\, h-y)} a(x+u)\, a(y+u)\, du.$$

It is convenient to first approximate $a(t)$ by a step function

$$a_n(t) = a_\nu = a\left(\frac{\nu+1}{n} h\right)$$

$$\text{if } \frac{\nu}{n} h \leqslant t < \frac{\nu+1}{n} h, \quad \nu = 0, 1, \ldots, n-1.$$

It is clear that

$$\left\| \int_0^1 a(t)\, \varphi_t\, dt - \int_0^1 a_n(t)\, \varphi_t\, dt \right\| \leqslant \|\varphi_t\| \cdot \int_0^h |a(t) - a_n(t)|\, dt,$$

so that, if n is large enough, we commit only a small error when we replace $A\varphi$ by

$$\int_0^h a_n(t)\, \varphi_t\, dt = \frac{1}{n} \sum_{\nu=0}^{n} a_\nu \varphi_\nu,$$

where $$\varphi_\nu = n \int_{\nu h/n}^{(\nu+1)h/n} \varphi_t\, dt.$$

Note that $\{\varphi_\nu\}$ forms a stationary process with a variance at most equal to 1, since

$$\|\varphi_\nu\| \leqslant n \int_{(\nu/n)h}^{[(\nu+1)/n]h} \|\varphi_t\|\, dt = h\, \|\varphi_t\| \leqslant h.$$

If we use only the observed values of φ_ν instead of φ_t, we get at least as large a value for $\min_p \max_\varphi B(\varphi, p)$. On the other hand, if $\{\varphi_\nu\}$ runs through all the stationary processes with a variance at most equal to 1, we get again to the discrete problem. But this value can be expressed in another way. Using Cramér's spectral representation, we can write

$$\varphi_\nu = \int_{-\pi}^{\pi} e^{i\nu\lambda}\, dZ(\lambda),$$

with $\|\Delta Z(\lambda)\|^2 = \Delta F(\lambda) =$ increment of the spectral distribution function corresponding to the process $\{\varphi_\nu\}$. Further,

$$\text{Variance of } \varphi_\nu = \int_{-\pi}^{\pi} dF(\lambda) = h.$$

We also have

$$\frac{1}{n}\sum_{0}^{n-1} a_\nu \varphi_\nu - \sum_{-\infty}^{-1} c_\nu \varphi_\nu = \int_{-\pi}^{\pi} [a(\lambda) - c(\lambda)]\, dZ(\lambda),$$

where

$$a(\lambda) = \frac{1}{n}\sum_{0}^{n-1} a_\nu e^{i\nu\lambda},$$

$$c(\lambda) = \sum_{-\infty}^{-1} c_\nu e^{i\nu\lambda},$$

and the series $\sum c_\nu \varphi_\nu$ is assumed to converge in the mean. But then,

$$\left\| \frac{1}{n}\sum_{0}^{n-1} a_\nu \varphi_\nu - \sum_{-\infty}^{-1} c_\nu \varphi_\nu \right\|^2 = \int_{-\pi}^{\pi} |a(\lambda) - c(\lambda)|^2\, dF(\lambda),$$

so that

$$\max_\varphi \|A_n \varphi - p\varphi\|^2 = \max_\lambda |a(\lambda) - c(\lambda)|^2.$$

Now we can apply a theorem for Toeplitz forms (see Notes) and see that

$$\min_p \max_\varphi \|A_n \varphi - p\varphi\|^2$$

is at most equal to the largest eigenvalue of the symmetric $n \times n$ matrix with the elements

$$h_{pq} = \frac{1}{n^2}\left[a\left(1 - \frac{p}{n}h\right) a\left(1 - \frac{q}{n}h\right) + a\left(1 - \frac{p-1}{n}h\right) a\left(1 - \frac{q-1}{n}h\right) + \dots + a(h)\, a\left(1 - \frac{q-p}{n}h\right)\right],$$

for $p \leq q$; $p, q = 0, 1, \dots, n-1$. For large n, this eigenvalue is approximately equal to the largest eigenvalue of the integral equation we had before. Hence

$$\min_p \max_\varphi \|A\varphi - p\varphi\| \leq \max_\varphi \min_p \|A\varphi - p\varphi\|,$$

and only equality is possible. Hence, the game is definite, and its value equals the largest eigenvalue of the integral equation.

4.9. *The Case with Constant Velocity in One Direction*

We now consider another, but closely related, pursuit problem. The evader E moves in a plane with a motion whose x component can be completely or at least approximately described as uniform motion (Fig. 18).

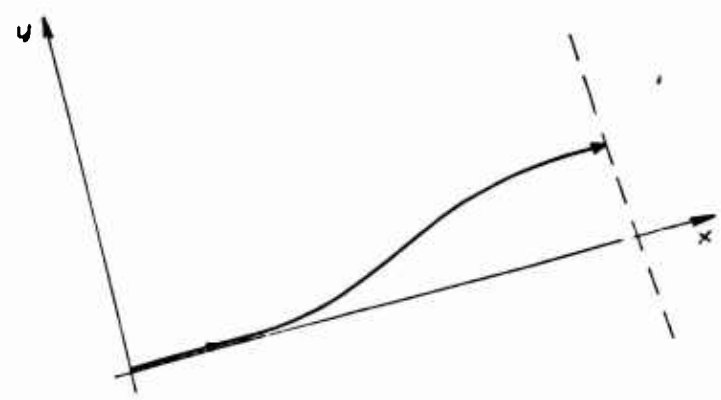

Fig. 18 Motion with constant component in the x direction.

We denote the acceleration in the y direction by $\varphi(t) = \ddot{y}(t)$, to resemble the notation used above. After h units of time, E has travelled the distance

$$\int_0^h (h - t)\, \varphi_t\, dt$$

in the y-direction. Identify this expression with our $A\varphi$ that shall be predicted, using the knowledge of the past trajectory of E. Put $h = 1$ for simplicity. Since now $a(t) = 1 - t$, we shall determine the largest eigenvalue and the corresponding eigenfunction $\gamma(t)$ to the integral equation

$$\lambda\gamma(t) = \int_0^1 K(t, s)\, \gamma(s)\, ds$$

with

$$K(t, s) = \int_0^{1-t} (1 - u - t)(1 - u - s)\, du$$

for $s < t$; $K(s, t) = K(t, s)$. With similar but slightly more complicated calculations as before, when $a(t) \equiv 1$, we get

$$\gamma(t) = C_1(\cos \varkappa t + \cos h\varkappa t) + C_2(\sin \varkappa t + \sin h\varkappa t),$$

where $\lambda = \varkappa^4$. The constant $\varkappa$ shall be the smallest positive root of the equation

$$\cos \varkappa \cdot \cos h\varkappa = -1.$$

The coefficients C_1 and C_2 shall be determined so that

$$\begin{cases} \gamma(1) = 0, \\ \int_0^1 \gamma^2(t)\,dt = \text{given variance.} \end{cases}$$

We get approximately $\varkappa \simeq 1.88$, so that the value of the game is $\simeq 0.08$. The optimal evasion is obtained by feeding random noise $\xi(t)$ into a linear filter with the response function $\lambda(t)$; the output of the filter is the acceleration of E in the y direction.

4.10. *The Case with Two Variable Velocity Components*

Let us investigate the following type of evasion. The evader E moves in a plane, the velocity vector $x(t) = [x_1(t), x_2(t)]$ forming a normal, stationary stochastic process with the spectral density matrix

$$\begin{Bmatrix} f_{11}(\lambda) & f_{12}(\lambda) \\ f_{21}(\lambda) & f_{22}(\lambda) \end{Bmatrix},$$

where $f_{11}(\lambda)$ and $f_{22}(\lambda)$ are the spectral densities of the coordinates $x_1(t)$ and $x_2(t)$, respectively, and where $f_{12}(\lambda) = f_{21}(\lambda)$ is the (complex valued) cross-spectral density between $x_1(t)$ and $x_2(t)$. The kinematic restrictions are given as

$$\int_{-\infty}^{\infty} [a_1(\lambda) f_{11}(\lambda) + a_2(\lambda) f_{22}(\lambda)]\,d\lambda \leq A.$$

This form is general enough to describe many important restrictions. Perhaps the most important case is the symmetric one, $a_1(\lambda) = a_2(\lambda) = a(\lambda)$, where both coordinates are treated in the same way. This would, e.g., be the case when the restriction is on the mean square value of the acceleration or velocity: $a(\lambda) = \lambda^4$ in the first case, and $a(\lambda) = \lambda^2$ in the second.

The first order linear predictor will be used:

$$E_1 = E_0 + hx(0).$$

To study the miss distance b belonging to prediction h steps ahead, we write

$$b = \int_0^h x(t)\,dt - hx(0).$$

The earlier discussion was built on the criterion Eb^2. This will often be natural, at least as a first attempt. Sometimes it will be necessary to be more realistic and introduce the probability of hit, p, as a function of the miss distance, $p = p(b)$. This is clear, especially when we have to take into account the ballistic dispersion. Note, that the following reasoning can be modified without too much trouble it we want to include the superimposed error of observation. Then we observe, not $x(t)$, but $x(t) + \varepsilon(t)$ for $t \leq 0$, where $\varepsilon(t)$ is the error vector. Pure speculations will not help us much to decide what form the function $p(b)$ should have. For simplicity, we assume that $p(b)$ is proportional to

$$\exp - \frac{\|b\|^2}{2\sigma^2}.$$

Other choices of $p(b)$ dealt with individually.

The vector $b = (b_1, b_2)$ has a normal distribution whose second order moments

$$m_{ij} = \mathbf{E} b_i b_j, \quad i, j = 1, 2, \ldots,$$

form a 2×2 matrix M

$$M = \begin{Bmatrix} m_{11} & m_{12} \\ m_{21} & m_{22} \end{Bmatrix}.$$

We can write down the expression for the probability of hit

$$\mathbf{E}\,p(b) = \frac{C}{2\pi\sqrt{\det M}} \times \int_{-\infty}^{\infty}\int_{-\infty}^{\infty} \exp\left\{-\frac{\|b\|^2}{2\sigma^2} - b' M^{-1} b\right\} db_1\,db_2$$

$$= \frac{C}{2\pi\sqrt{\det M}} \int_{-\infty}^{\infty}\int_{-\infty}^{\infty} \exp\{-\tfrac{1}{2} b' N^{-1} b\}\,db_1\,db_2,$$

where
$$N = \left(\frac{I}{\sigma^2} + M^{-1}\right)^{-1}.$$

But this is an integral of well-known form, and it can be evaluated as

$$\mathbf{E}\,p(b) = C\sqrt{\frac{\det N}{\det M}} = C\sqrt{\det NM^{-1}} = \frac{C}{\sqrt{\det\left(I + \frac{1}{\sigma^2} M\right)}}.$$

It is in E's interest to choose his tactics so that $\mathbf{E}\,p(b)$ is small, i.e., $\det(\sigma^2 I + M)$ is as large as possible under the given side conditions. To carry out this, we observe that, putting

$$q(\lambda) = \left|\frac{e^{ih\lambda} - 1}{i\lambda} - h\right|^2,$$

we get

$$\left.\begin{aligned} \mathbf{E} b_1^2 &= \int_{-\infty}^{\infty} q(\lambda) f_{11}(\lambda)\,d\lambda, \\ \mathbf{E} b_2^2 &= \int_{-\infty}^{\infty} q(\lambda) f_{22}(\lambda)\,d\lambda, \\ \mathbf{E} b_1 b_2 &= \int_{-\infty}^{\infty} q(\lambda) f_{12}(\lambda)\,d\lambda. \end{aligned}\right\}$$

We should then maximize the determinant

$$\det(\sigma^2 I + M)$$
$$= \left[\sigma^2 + \int_{-\infty}^{\infty} q f_{11}\, d\lambda\right]\left[\sigma^2 + \int_{-\infty}^{\infty} q f_{22}\, d\lambda\right] - \left|\int_{-\infty}^{\infty} q f_{12}\, d\lambda\right|^2.$$

The kinematic restrictions have been imposed upon $f_{11}(\lambda)$ and $f_{12}(\lambda)$. In whatever way these functions have been chosen, we can maximize the determinant by putting $f_{12}(\lambda) = 0$; this is admissible, since it does not violate the inequality $|f_{12}(\lambda)| \leq \sqrt{f_{11}(\lambda) f_{22}(\lambda)}$. The physical interpretation of this is that the evasion can be governed by two uncorrelated (incoherent) velocity components, $\mathbf{E}\, x_1(t)\, x_2(t) = 0$.

Let us go ahead and determine $f_{11}(\lambda)$ and $f_{22}(\lambda)$. We have

$$M = \det(\sigma^2 I + M) = \sigma^4 + \sigma^2 \int_{-\infty}^{\infty} q f\, d\lambda + \int_{-\infty}^{\infty} q f_{11}\, d\lambda \int_{-\infty}^{\infty} q f_{22}\, d\lambda,$$

where we have put $f_{11} + f_{22} = f$. If S_1 and S_2 are the supports for f_{11} and f_{22}, respectively, the usual variational argument gives the following. Vary the value of $f_1(\lambda)$ at the frequency $\lambda_1 \in S_1$, and at the same time the value of $f_2(\lambda)$ at $\lambda_2 \in S_2$, so that the equation

$$\int_{S_1} a_1 f_1\, d\lambda + \int_{S_2} a_2 f_2\, d\lambda = A$$

still holds. A simple calculation gives us

$$\begin{cases} \dfrac{q(\lambda)}{a_1(\lambda)} = C_1 & \text{for all } \lambda \in S_1, \\[2ex] \dfrac{q(\lambda)}{a_2(\lambda)} = C_2 & \text{for all } \lambda \in S_2, \end{cases}$$

together with the relation

$$C_1 = \frac{\sigma^2 + A_1}{\sigma^2 + A_2} C_2.$$

Here we have defined

$$\left.\begin{aligned} A_1 &= \int a_1 f_{11}\, d\lambda, \\ A_2 &= \int a_2 f_{22}\, d\lambda, \\ A_1 + A_2 &= A, \end{aligned}\right\}$$

and the constants C_1 and C_2 must be chosen among the values that are taken by the functions $q(\lambda)/a_1(\lambda)$ and $q(\lambda)/a_2(\lambda)$, respectively. The expression to be maximized is then

$$M = \sigma^2 \int q f_{11}\, d\lambda + \sigma^2 \int q f_{22}\, d\lambda + \int q f_{11}\, d\lambda \int q f_{22}\, d\lambda$$
$$= \sigma^2 C_1 A_1 + \sigma^2 C_2 A_2 + C_1 A_1 C_2 A_2.$$

This is an elementary maximum problem with two variables C_1 and C_2, and with side conditions as above. For given functions $a_1(\lambda), a_2(\lambda)$, and $q(\lambda)$, we can determine the maximum directly.

We remark that, in order that the previous reasoning shall be complete, it is necessary to verify that the supremum of M is attained so that an optimal solution really exists. This is not difficult. First, we must operate with $dF_{ii}(\lambda)$ instead of with $f_{ii}(\lambda)\, d\lambda$. Further, we shall demand that $\lim_{\lambda \to \pm\infty} |a_i(\lambda)| = +\infty$. If one looks into this, one sees that this is really a compactness condition for the set of admissible spectral distribution functions. Using this compactness, we can complete the proof of the existence of an optimal solution.

4.11. *Three-dimensional Pursuit*

By now we should have some idea of how a two-dimensional pursuit problem can be dealt with. When we turn to three dimensions, we do not expect to meet any new fundamental difficulty, but of course higher complexity and more cumbersome calculations. Let us take a brief look at a simple three-dimensional situation.

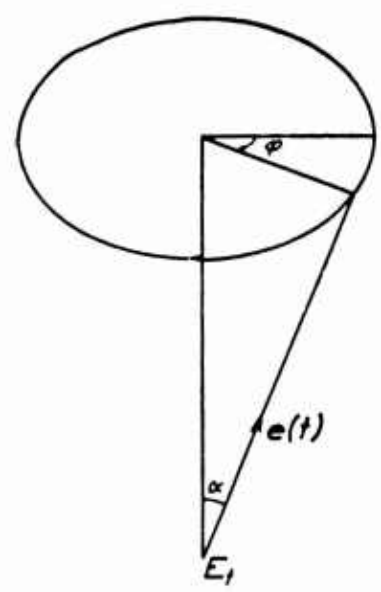

Fig. 19. The angles α and φ.

The evader E moves in space with the constant speed v in a direction described by the unit vector $e(t)$ at time t. Introduce the angles α and φ as in Fig. 19, $0 \leq \alpha < \pi$, $0 \leq \varphi < 2\pi$. Let $\alpha = 0$ be the direction in which E wishes to travel. Then it is natural to ask, just as before, that $\cos\alpha$ be kept as close as possible to 1, at least on the average. The expression $vE \cos\alpha$ is the expected velocity component in the direction $\alpha = 0$ and should be made as large as possible, i.e., close to v. When t varies we shall let E_t form a polygon in space, or, in other words, $e(t)$ shall be stepwise constant, so that

$$\left.\begin{aligned} &e(t) = e_\nu, \quad t_\nu \leq t < t_{\nu+1}, \\ &\ldots < t_{-1} < t_0 < t_1 < \ldots. \end{aligned}\right\}$$

The time points t_ν shall be chosen so as to form a Poisson process with intensity λ, so that on the average we get λ changes of direction per time unit. The stochastic vectors e_ν shall be independent and have the same probability distribution over the surface of the unit sphere. We then get trajectories looking something like Fig. 20, where the angles ϑ_ν between the two consecutive course vectors e_ν and $e_{\nu+1}$ are of importance in the following. This mathematical model for the velocity vector $v\,e(t)$ is a stationary stochastic process with the mean value vector

$$m = v\mathbf{E}\,e_1 = ve_1\,\mathbf{E}\cos\alpha.$$

Fig. 20. Motion with course changing at random intervals.

We have represented it in a rectangular coordinate system with origin in E_0 and with the first coordinate axis in the direction $\alpha = 0$. We introduce the covariance function

$$r(s-t) = \mathbf{E}\,[e(s) - m, e(t) - m],$$

where (x, y) means the inner product of the two vectors x and y. We then get

$$r(h) = Pr\{\text{no event in an interval of length } h\} \cdot E\,\|e_1 - m\|^2$$
$$+ Pr\{\text{at least one event in an interval of length } h\}$$
$$\cdot\,\mathbf{E}\,(e_1 - m,\, e_2 - m).$$

The second mathematical expectation vanishes because of the independence of e_1 and e_2, so that

$$r(h) = e^{-\lambda h} \cdot \mathbf{E}\,\|e_1 - m\|^2 = Ce^{-\lambda h}.$$

Perhaps this model is too simple to describe real evasive maneuvers. However, it can be modified to a more flexible model.

Let us first consider the case where P uses a first order linear predictor. The true position,

$$v\int_0^1 e(t)\,dt,$$

after one time unit is then approximated simply by $v\,e(0)$. The mean square prediction error σ^2 is given by the expression

$$\sigma_1^2 = \mathbf{E}\left\|\int_0^1 [e(t) - e(0)]\,dt\right\|^2.$$

But,

$$\sigma_1^2 = \int_0^1\int_0^1 \mathbf{E}\,(e(t) - m, e(s) - m)\,ds\,dt$$
$$- 2\int_0^1 \mathbf{E}\,(e(t) - m, e(0) - m)\,dt$$
$$+ \mathbf{E}\,\|e(0) - m\|^2 = \int_0^1\int_0^1 r(s-t)\,ds\,dt$$
$$- 2\int_0^1 r(t)\,dt + r(0)$$
$$= C\left[\int_0^1\int_0^1 e^{-\lambda|s-t|}\,ds\,dt - 2\int_0^1 e^{-\lambda t}\,dt + 1\right].$$

It is in E's interest to make $C = \mathbf{E}\,\|e - m\|^2$ as large as possible. If we demand that the side condition $m_1 = \mathbf{E}\cos\alpha \geq b$ be satisfied, and since

$$C = \mathbf{E}\sum_1^3 (e_\nu - m_\nu)^2 = \mathbf{E}\sum_1^3 e_\nu^2 - \sum_1^3 m_\nu^2 = 1 - \|m\|^2$$
$$= 1 - m_1^2 - m_2^2 - m_3^2,$$

it follows that maximum is attained by putting $m_2 = m_3 = 0$. The notation e_ν, m_ν stands for the coordinates of the unit vector e and the mean value vector m, respectively. Intuitively, this is quite clear: the mean direction should be chosen as $\alpha = 0$, because every systematic deviation from this direction makes m_1 smaller without causing trouble for the predictor.

The previous reasoning is not limited to predictors of the first order. Instead, let P choose the best predictor (in the sense of the least squares criterion), linear or not. One knows that this is given as a regression expression, or, in other words, as a conditional expectation. The conditional expectation of $e(t)$ when $e(s), s \leq 0$, is known is given by

$$e^*(t) = e(0)\,Pr\{\text{no change of the course during } (0, t)\}$$
$$+ m\,Pr\{\text{at least one change}\}$$
$$= e(0)\,e^{-\lambda t} + m(1 - e^{-\lambda t}).$$

The smallest possible prediction error is then

$$\sigma_{opt}^2 = v^2\,\mathbf{E}\left\|\int_0^1 e(t)\,dt - \int_0^1 e^*(t)\,dt\right\|^2$$
$$= v^2\mathbf{E}\left\|\int_0^1 [e(t) - m]\,dt - \int_0^1 e^{-\lambda t}[e(0) - m]\,dt\right\|^2$$

$$= v^2 \int_0^1 \int_0^1 r(s-t)\, ds\, dt$$

$$- 2v^2 \frac{1-e^{-\lambda}}{\lambda} \int_0^1 r(t)\, dt + v^2 \left(\frac{1-e^{-\lambda}}{\lambda}\right)^2 r(0).$$

This expression is proportional to C and is maximized, just as before, by choosing $m_2 = m_3 = 0$.

In order to compare the result of the first order and the general predictor, we should compare the two expressions

$$\frac{\sigma_1^2}{Cv^2} = \frac{2}{\lambda}\left\{1 - \frac{1-e^{-\lambda}}{\lambda}\right\} - 2\,\frac{1-e^{-\lambda}}{\lambda} + 1$$

and

$$\frac{\sigma_{\text{cpt}}^2}{Cv^2} = \frac{2}{\lambda}\left\{1 - \frac{1-e^{-\lambda}}{\lambda}\right\} - \left(\frac{1-e^{-\lambda}}{\lambda}\right)^2.$$

4.12. *Pursuit Problems of a More General Type*

We have mentioned in section 2.1 that one can meet pursuit problems where it is natural to introduce more than three degrees of freedom. This is when it is necessary to take into account the *geometrical shape* of E or P, and when it is not allowed to approximate them as points. This will be necessary if the form of the target is oblong, and if the effect of the weapons (or reconnaissance) is proportional to the area shown by the target.

Another situation where the directional effect is so strong that is should not be neglected is when the target is a heat source and infrared techniques are used.

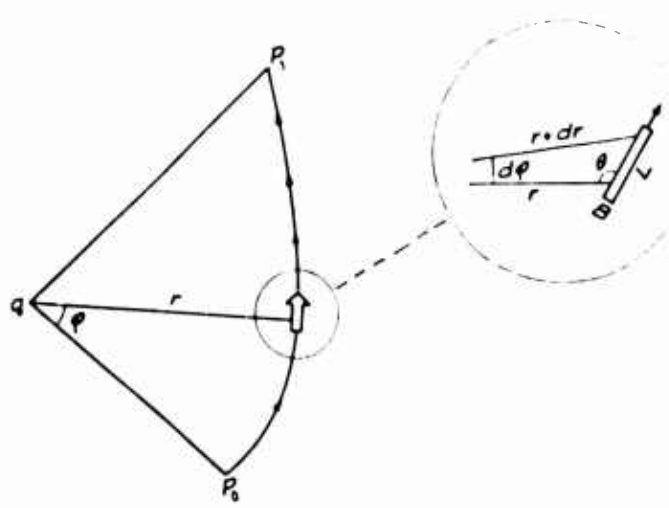

Fig. 21. Motion from p_0 to p_1 minimizing some effect from a fixed point q.

We shall indicate how problems of this type can be studied. Let us start with a simple situation of a certain interest: then evader E tries to move from one point, p_0, to another, p_1, see Fig. 21. Certain restrictions are given for the motions, e.g. the speed v may be given. Other restrictions will be discussed later on. During his motion, E is exposed to the effect of some activity, say, bombardment from a point q. Assume that this effect is additive; if it is a bombardment we may think of the expected number of hits. We shall assume the effect to be proportional to three factors, (1) some function $p(r)$ of the distance to q, (2) the time of the activity, and (3) the area of the target shown in the direction of q. The third factor, y, is usually a function of the angle θ, $y = y(\theta)$. We are thinking of E as a rectangle with length L and width B. We then get $y = y(\theta) = L|\sin\theta| + B|\cos\theta|$. The total effect is

$$e(\gamma) = \int_\gamma y(\theta)\, p(r)\, dt,$$

where the line integral shall be extended over some trajectory γ joining the points p_0 and p_1.

Let us rewrite the expression using the arc element ds:

$$e(\gamma) = \int_\gamma p(r)\left[L r \left|\frac{d\varphi}{ds}\right| + B\left|\frac{dr}{ds}\right|\right] dt$$

$$= \frac{1}{v}\int_\gamma p(r)\,[L r\,|d\varphi| + B\,|dr|].$$

The admissible trajectories γ form a set, Γ. If Γ is such that r and φ are non-decreasing functions of s, we can leave out the absolute value signs and get the simpler expression

$$e(\gamma) = \int_\gamma \left[\frac{L}{v}\, p(r)\, r d\varphi + \frac{B}{v}\, p(r)\, dr\right].$$

The integrand is usually not a total differential, since then $e(\gamma)$ would be independent of the path γ. We can make it into a total differential through multiplication by a function of r and φ. In other words, we can find an integrating factor $F = F(r, \varphi)$, such that

$$\frac{L}{v}\, p(r)\, r d\varphi + \frac{B}{v}\, p(r)\, dr = \frac{1}{F}\, d\psi,$$

where

$$d\psi = a(r, \varphi)\, d\varphi + b(r, \varphi)\, dr$$

is the total differential of a function $\psi = \psi(r, \varphi)$. To find the integrating factor, we should have

$$F(\varphi, r)\,[L p(r)\, r d\varphi + B p(r)\, dr] = \text{total differential},$$

which requires that

$$\frac{\partial F}{\partial r}\, L p(r) + F L \frac{\partial}{\partial r}\,[p(r)\, r] = \frac{\partial F}{\partial \varphi}\, B p(r).$$

We get the linear first order partial differential equation

$$B p(r)\, \frac{\partial F}{\partial \varphi} - L p(r)\, r\, \frac{\partial F}{\partial r} = L[p(r)\, r]'\, F.$$

The characteristic system of this equation is

$$\frac{d\varphi}{B p(r)} = -\frac{dr}{L p(r)\, r} = \frac{dF}{L[p(r)\, r]'\, F},$$

with the solutions

$$\left.\begin{aligned} r \exp \frac{L}{B} \varphi &= C_1, \\ F p(r) r &= C_2. \end{aligned}\right\}$$

Hence, with a wellbehaved function Φ,

$$F p(r) r = \Phi\left(r \exp \frac{L}{B} \varphi\right).$$

We might choose $\Phi(x) = x$, and get

$$F = \frac{1}{p(r)} \exp \frac{L}{B} \varphi,$$

or use some other choice of Φ.

We want to minimize the total effect

$$e(\gamma) = \int_\gamma \frac{1}{F} d\psi = \text{inf.},$$

when γ varies over the set Γ. This problem belongs to the calculus of variation, but it is of very simple form, and it will be convenient to discuss it directly. We need not use the special form of the differential; it has been introduced to serve as an illustration. Instead, we will try to minimize $e(\gamma)$ in somewhat greater generality. Suppose that, for any $\gamma \in \Gamma$, we have $dr \geq 0$, $d\varphi \geq 0$, and that the contour curves $\psi = \text{const.}$ divide the plane as indicated in Fig. 22, so that ψ is a nondecreasing function of s on every γ.

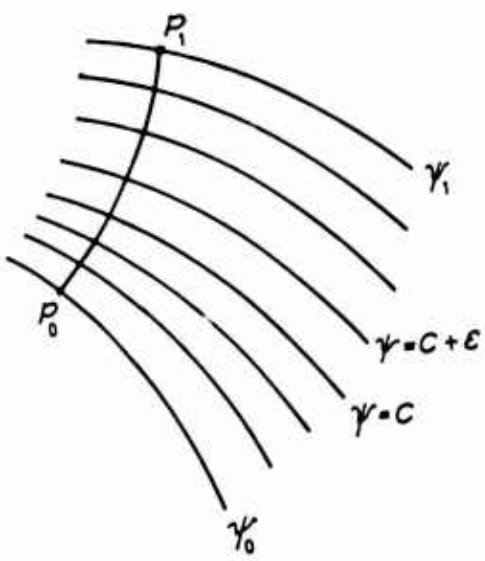

Fig. 22. Surfaces of constant ψ.

Consider the segment of γ in the strip between the contour lines $\psi = C$ and $\psi = C + \varepsilon$. E must pass through the strip, and it is to his advantage to do this where F is as large as possible. This will help us in choosing the optimal trajectory. In special cases, the idea of this heuristic reasoning is not too difficult to complete. A general treatment is complicated by the many possible topological properties of the family of curves $\{\psi = C\}$, and the set Γ can vary a good deal. We shall not go into this here, but confine ourselves to a few remarks.

The first of the two side conditions $d\varphi \geq 0$, $dr \geq 0$ seems natural in many situations, but this cannot be said about the other one. We might sometimes prefer to work with the expression

$$e(\gamma) = \int_\gamma [a(r, \varphi)\, d\varphi + b(r, \varphi)\, |dr|].$$

It is difficult to see how the previous reasoning could be applied directly.

We have not discussed the smoothness conditions that should be imposed on the trajectories. Few regularity difficulties will arise if φ and r are assumed to be of bounded variation. Neither is there any great difficulty in verifying that the maximum is attained. To see this, the interested reader is advised to study some special case.

If $d\varphi \geq 0$, but dr can take both signs, we can only give some vague hints about how the method could be made to work. Consider a trajectory γ joining p_0 and p_1. Suppose that γ consists of a number of arcs γ_ν, $\nu = 1, 2, \ldots, n$, such that dr has constant sign on each of these arcs. If the end points of γ_ν are denoted p_0^ν and p_1^ν, the following holds. In order that γ should be optimal, each γ_ν must have the similar optimality property. For given values of p_0^ν, p_1^ν, we can then determine the conditional optimal form of γ_ν. We must then let p_0^ν, p_1^ν vary to find the global maximum. If the optimal γ is of this form, the problem has been reduced to a finite minimum problem. Especially if n is small, $n = 2$ or $n = 3$, we have some hope of finding the optimum explicitly. Otherwise, the computational difficulties will probably prevent a successful solution along these lines.

Let us now approach this problem from the point of view of the classical calculus of variation. The total effect was additively built up from infinitesimal contributions that could be written as

$$p(r)\, \gamma(\theta)\, \frac{ds}{v}.$$

We mentioned one special case where

$$q(\theta) = L\,|\sin \theta| + B\,|\cos \varphi|.$$

In general, $y(\theta)$ will depend upon the geometric configuration of the target. This dependence can be very complicated, and we cannot assume directly any general formula for $y(\theta)$ if we seek a realistic model. Let us write, however,

$$e(\gamma) = \int_\gamma p(r)\, y(\theta)\, \frac{ds}{v} = \int_\gamma L(\varphi, r, r')\, d\varphi,$$

where L is a function of φ, $r = r(\varphi)$, and $r' = r'(\varphi)$. If L is sufficiently smooth, we have an ordinary variational problem of standard type. The treatment is straightforward: we vary the function $r(\varphi)$

$$\left.\begin{aligned} r_\varepsilon(\varphi) &= r(\varphi) + \varepsilon(\varphi), \\ \varepsilon(\varphi_0) &= \varepsilon(\varphi_1) = 0, \end{aligned}\right\}$$

and get for the new trajectory γ_ε, corresponding to $r_\varepsilon(\varphi)$,

$$e(\gamma_\varepsilon) = \int_{\varphi_0}^{\varphi_1} L(\varphi, r_\varepsilon, r_\varepsilon')\, d\varphi = \int_{\varphi_0}^{\varphi_1} \Big[L(\varphi, r, r') + \varepsilon(\varphi) \frac{\partial}{\partial r} L(\varphi, r, r') + \varepsilon'(\varphi) \frac{\partial}{\partial r'} L(\varphi, r, r') \Big] d\varphi + \text{higher order terms.}$$

After a partial integration, we get, taking into account the side conditions $\varepsilon(\varphi_0) = \varepsilon(\varphi_1) = 0$,

$$e(\gamma_\varepsilon) - e(\gamma) = \int_{\varphi_0}^{\varphi_1} \left[\frac{\partial L}{\partial r} - \frac{\partial^2 L}{\partial r' \partial \varphi} \right] \varepsilon(\varphi)\, d\varphi + \dots .$$

In order that this variation shall vanish for every $\varepsilon(\varphi)$, we get the classical equation

$$\frac{\partial L}{\partial r} = \frac{\partial^2 L}{\partial r' \partial \varphi}.$$

It is known that this heuristic argument does not always lead to a minimum. Let us note the following, however.

This approach is flexible, since we can choose $y(\theta)$ freely and make it fit the concrete problem. But it does not include the previous method as a special case, since in this the function $y(\theta)$ was not differentiable. Without introducing any essential changes, we can use the same approach for the case where the point q moves, see Fig. 21. It is clear that this modification is of practical interest. Let us discuss the following situation. The point q moves along the straight line L, Fig. 23. The point p tries to reach q and moves with

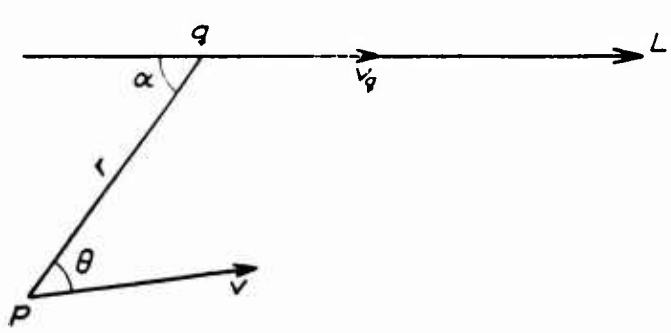

Fig. 23. Modifying the previous problem to the case where q is moving.

the velocity v in a direction given in terms of the angles α and θ. A differential equation relates r, α, and θ to each other, and expresses that the velocity v is directed along the tangent of p's trajectory. If p is exposed to some additive activity during its motion, we will try to find the trajectory that minimizes

$$e = \int_0^{r_0} K[r, \alpha(r), \alpha'(r)]\, dr.$$

We have assumed that the motion is such, that r decreases monotonically from the initial value r_0 to 0. Clearly, this is a variational problem of the same type as before.

Let us now return to the equation

$$\frac{\partial L}{\partial r} = \frac{\partial^2 L}{\partial r' \partial \varphi}$$

and see what happens in a special case. Assume that the influence of the distance is negligible, $p(r) \equiv C$, and that the dependence upon the direction has the form

$$y(\theta) = \sqrt{a \cos^2\theta + b \sin^2\theta} = \sqrt{b r^2 \left(\frac{d\varphi}{ds}\right)^2 + a \left(\frac{dr}{ds}\right)^2}.$$

This can be said to correspond to the target having elliptical configuration. We then have

$$e(\gamma) + \int_\gamma \sqrt{\left[b r^2 \left(\frac{d\varphi}{ds}\right)^2 + a \left(\frac{dr}{ds}\right)^2 \right]} \frac{ds}{v} = \frac{1}{v} \int_{\varphi_0}^{\varphi_1} \sqrt{b r^2 + a (r')^2}\, d\varphi.$$

This is very simple, since L does not contain φ, so that

$$\frac{\partial}{\partial \varphi} \left[L - r' \frac{\partial L}{\partial r'} \right] = \frac{\partial L}{\partial r} r' + \frac{\partial L}{\partial r'} r'' - r'' \frac{\partial L}{\partial r'} - r' \frac{\partial^2 L}{\partial r' \partial \varphi} = r' \left[\frac{\partial L}{\partial r} - \frac{\partial^2 L}{\partial r' \partial \varphi} \right] = 0,$$

which gives us

$$L - r' \frac{\partial L}{\partial r'} = \text{constant } k.$$

Solving this, we get

$$\sqrt{b r^2 + a (r')^2} - \frac{a (r')^2}{\sqrt{b r^2 + a (r')^2}} = k,$$

and

$$b r^2 = k \sqrt{b r^2 + a (r')^2}.$$

Hence, r' is given by

$$r' = \pm \sqrt{\frac{b^2 r^4 - k^2 b r^2}{k^2 a}},$$

so that $$\varphi(r) = \varphi(r_0) \pm \int_{r_0}^{r} \frac{k\sqrt{a}}{br\sqrt{r^2 - \frac{k^2}{b}}}\, dr.$$

The constant k shall be determined so that the trajectory passes through the point p_1, $\varphi(r_1) = \varphi_1$.

Note that if we want to include the distance function $p(r)$, very little need be changed in the above.

We meet a more difficult problem when we try to combine the directional dependence that we have discussed with stochastic elements in the evasive maneuvers and in the ballistic properties of the weapons. The prediction introduces an error δ, just as before. But now we also have the ballistic dispersion η around the point of aim, E_h^*. It is natural to consider δ and η as stochastic vectors. The target, whose arc will be denoted by A, will be rotated through some angle φ during the time h. The evasive maneuvers are carried out not only to increase δ, but to influence the angle φ, so that the target will be more difficult to hit. In general, these two quantities are not independent of each other. For very narrow (needle formed) targets the change in φ can be more important than δ.

To take these factors into account, we must make more precise assumptions on the probabilistic properties of the relevant quantities. Earlier we worked mainly with criteria such as miss distance, and we could use linear methods based on the first and second order moments of these probability distributions. This is no longer so. To study the directional effect of the geometric form of the target, we must integrate over the area A oriented with a certain angle φ, see Fig. 24. To be able to do this, we must know the frequency function appearing as the integrand.

Fig. 24. Directional effect.

To make this more concrete, we shall assume that the vectors δ and η are normally distributed. This is a standard assumption in such problems, but that does not mean that it is a good approximation. Further, we must know the distribution of φ, which leads us to an interesting question. We can express the distribution of φ in terms of the functions $g(t)$ and $\gamma(z)$, if the evasive tactics is given by

$$\left.\begin{aligned} x(t) &= x(0) + v\int_0^t \cos\varphi_s\, ds, \\ y(t) &= y(0) + v\int_0^t \sin\varphi_s\, ds, \end{aligned}\right\}$$

as in an earlier section. In the important case where $\gamma(z)$ is a second order polynomial, the angle φ is normally distributed. Another type of evasion is as follows: $\dot{y}(t)$ is a normal process with mean square $\varepsilon^2 = E[\dot{y}(t)]^2$, and $\dot{x}(t)$ is determined so that the velocity is approximately constant, $[\dot{x}(t)]^2 + [\dot{y}(t)]^2 \simeq v^2$. This is possible only if ε^2 is small, $\varepsilon/v < 1$. This model is suitable for describing small, non-systematic evasive maneuvers from a fixed trajectory, here thought of as a straight line. Since

$$\cos\varphi_t = \frac{\dot{y}(t)}{\sqrt{[\dot{x}(t)]^2 + [\dot{y}(t)]^2}} = \frac{\dot{y}(t)}{v},$$

it is clear that $\cos\varphi_t$ is also approximately normal. Many variants of this model are possible.

Another circumstance should be observed. Let the angle φ have a frequency function $p(\varphi)$. In general, we are only interested in the value of φ modulo 2π. Let us denote the angle φ reduced to the interval $(-\pi, \pi)$ by α. Then, α has a frequency function $q(\alpha)$ that can be computed directly as

$$q(\alpha) = \sum_{k=-\infty}^{\infty} p(\alpha - 2k\pi), \quad -\pi < \alpha < \pi.$$

In the case where φ has almost all its probability mass in a small interval, we need only use one term in the above sum. If the evasion uses more violent turns, we may have to use several of the terms. In the special case of a normal distribution we would get

$$q(\alpha) = \frac{1}{\sigma\sqrt{2\pi}} \sum_{k=-\infty}^{\infty} \exp - \frac{(\alpha - 2k\pi)^2}{2\sigma^2},$$

which can be identified as a ϑ-function.

The analytic treatment of stochastic maneuvers can be a good deal more complicated when we have directional dependence. Let us discuss briefly the case of normal distributions. With the previously introduced notation, we have

$$Pr\{\eta \in T_\varphi A + \delta\}.$$

Here, A is the target area with the orientation it had at $t = 0$. The set $T_\varphi A$ denotes the congruent region after a rotation by the angle φ. The set $T_\varphi A + \delta$ denotes the set $T_\varphi A$ translated by the vector δ, the error of prediction. The vector η means the ballistic error. Let us first calculate the conditional probability for a fixed value of δ

$$Pr = Pr\{\eta \in T_\varphi A + \delta \mid \delta\} = \mathbf{E} \iint_{T_\varphi A + \delta} f(\eta)\, d\eta,$$

where $f(\eta)$ is assumed to be a normal frequency function

$$f(\eta) = \frac{1}{2\pi \sqrt{\det M}} \exp\left(-\tfrac{1}{2}\eta' M^{-1}\eta\right).$$

The symbol **E** stands here for mathematical expectation, integration over the values of φ. After substituting $T_\varphi \eta + \delta = y$, we get the relation

$$Pr = \int_A \int \mathbf{E} f[T_\varphi^{-1}(y-\delta)]\, dy$$

and

$$Pr = \int_A \int h_\delta(y)\, dy,$$

where

$$h_\delta(y) = \frac{1}{2\pi\sqrt{\det M}} \mathbf{E} \exp\left[-\tfrac{1}{2}(y-\delta)' T_\varphi M^{-1} T_\varphi'(y-\delta)\right].$$

We can write the orthogonal matrix T_φ as

$$T_\varphi = \begin{Bmatrix} \cos\varphi & \sin\varphi \\ -\sin\varphi & \cos\varphi \end{Bmatrix},$$

so that

$$h_\delta(y) = \frac{1}{2\pi\sqrt{\det M}} \mathbf{E} \exp -\tfrac{1}{2} Q,$$

where Q is a bilinear form in $\cos\varphi$ and $\sin\varphi$. Denote the normed eigenvectors of the symmetric matrix M^{-1} by ξ_1, ξ_2 with the corresponding eigenvalues m_1, m_2. We get

$$T_\varphi^{-1}(y-\delta) = \|y-\delta\| \{\xi_1 \cos(\varphi+\alpha) + \xi_2 \sin(\varphi+\alpha)\}$$

and

$$\begin{aligned} Q &= (y-\delta)' T_\varphi M^{-1} T_\varphi'(y-\delta) \\ &= \|y-\delta\|^2 \{m_1 \cos^2(\varphi+\alpha) + m_2 \sin^2(\varphi+\alpha)\} \\ &= \|y-\delta\|^2 \{(m_1-m_2)\cos^2(\varphi+\alpha) + m_2\}. \end{aligned}$$

Since $\det M = m_1^{-1} m_2^{-2}$, and if $y = \cos(\varphi+\alpha)$ has the frequency function

$$p(u) \simeq \frac{1}{\sigma\sqrt{2\pi}} e^{-u^2/2\sigma^2},$$

we have

$$\begin{aligned} h_\delta(y) &\simeq \frac{\sqrt{m_1 m_2}}{(2\pi)^{\frac{1}{2}}\sigma} \\ &\quad \times \int_{-\infty}^{\infty} \exp\left\{-\frac{u^2}{2}\left[\|y-\delta\|^2(m_1-m_2) + \frac{1}{\sigma^2}\right] + m_2\|y-\delta\|^2\right\} du \\ &= \frac{m_1 m_2}{2\pi\sigma\sqrt{\|y-\delta\|^2(m_1-m_2) + 1/\sigma^2}} \exp -\frac{\|y-\delta\|^2}{2} m_2. \end{aligned}$$

This is a conditional frequency function (for given value of δ), and it should be observed that the parameters in this expression depend in general upon δ. To obtain the (absolute) frequency function—needed to calculate the desired probability of hit—we must perform one more integration. To be able to carry out this, we must know the distribution of δ and its influence upon φ. This will depend upon the construction of the prediction system, and an analytic treatment of this question would require a complete specification of the predictor. We shall not attempt to do this here, but it should be emphasized that the present discussion should be seen only as an illustration of how the problem can be approached.

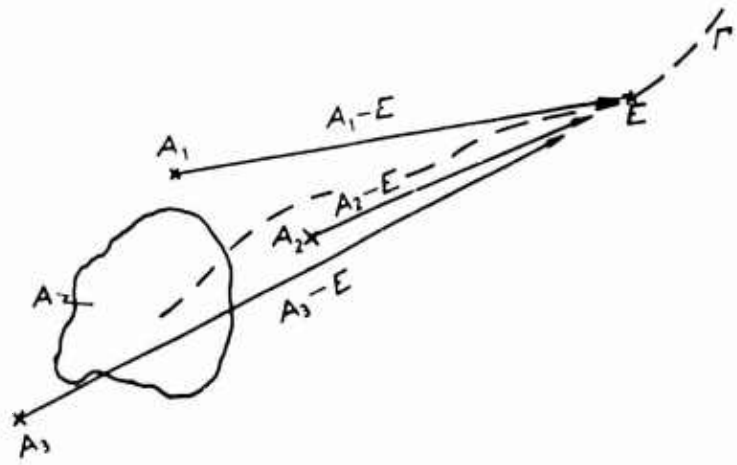

Fig. 25. Optimal trajectory over a defended area.

Consider the following pursuit problem. The area A should be defended against an invader (airplane, missile) E (Fig. 25). We assume that p identical defensive weapons (AA guns, ground-to-air missiles) have been located in the points $A_1, A_2, \ldots, A_p$. While E closes in on the target, he is exposed to fire from the defensive weapon system, and the effect of this is assumed to be continuous and additive. We get the total effect corresponding to a trajectory Γ

$$w(\Gamma) = \int_\Gamma \sum_{\nu=1}^{p} w(\|A_\nu - E\|)\, dt = \frac{1}{v} \sum_{\nu=1}^{p} \int_\Gamma w(\|A_\nu - E\|)\, ds,$$

where v is the constant speed, and the function $w(\|A_\nu - E\|)$ characterizes the weapon, whose effect should depend only upon the distance $\|A_\nu - E\|$. The function w is presumably a decreasing function, possibly with an exception for very short distances. For large arguments, w vanishes. If one wishes one can modify the model in such a way that w also depends upon the direction of the vector $A_\nu - E$.

The trajectory Γ starts in a given point E_0, that can be chosen as the point of infinity. The end of the trajectory is free but should be inside A. Note that A is really the area inside which E should use his own weapon in order to achieve the result he desires. The real target may very well be somewhere else, inside or outside A. Among all the admissible trajectories, we should choose the one that minimizes the value of the optimality criteria $w(\Gamma)$.

This problem is very similar to what we have discussed before. It may be interesting to note, however, that this is a classical extremal problem from geometrical optics. Introduce the function

$$w(E) = \left\{ \sum_{\nu=1}^{r} w(\| A_\nu - E \|) \right\}^{-1}$$

and choose the curve that minimizes the integral

$$\int_{\Gamma} \frac{ds}{w(E)} = \min.$$

But if we consider a medium where the speed of light is given by the function $w(E)$, the above relation is identical with the well-known principle of Fermat that the light rays follow paths that minimize the time it takes to travel along them. If we know the light velocity $w(E)$, we can determine, at least approximately, these trajectories numerically, using the law of refraction. In this way we get a simple algorithm to solve these special pursuit problems.

The value of $\min w(\Gamma)$ depends upon how the defensive weapons have been placed, i.e., upon $A_1, A_2, \ldots, A_p$. From the point of view of the defender, it is natural to choose such an arrangement of $A_{11}, A_{21}, \ldots, A_p$ that this value is made as large as possible. We try to find

$$\max_{A_\nu} \min_{\Gamma} w(\Gamma).$$

We shall not attempt a solution of this interesting problem.

The reader whose patience has enabled him to follow the long and sometimes laborious discussion in this paper will be aware of the fact, that there exists, so far, no coherent and general theory for solving pursuit problems. It is hoped, however, that he has got an idea of the philosophy of evasive maneuvers expressed in quantitative terms.

NOTES

In the text we have used mathematical tools all of which may not be familiar to the reader. Therefore we shall describe some of them briefly here and give references where the reader can find more information on these subjects.

As far as game theory is concerned, we have used only elementary facts. We use many times *the fundamental theorem for continuous games* on the unit square: If the payoff function $M(x, y)$ is continuous in $0 \leq x, y \leq 1$, one has

$$\max_F \min_G \int_0^1 \int_0^1 M(x, y)\, dF(x)\, dG(y)$$
$$= \min_G \max_F \int_0^1 \int_0^1 M(x, y)\, dF(x)\, dG(y).$$

Here, F and G are distribution functions over the unit interval. It should be noted that the analogous statement holds for a continuous game played over a compact region in Euclidean space E^n.

It is often convenient to solve the game as follows. Suppose that we can find a constant v and two distribution functions F_0 and G_0, such that

$$\left.\begin{aligned} \int_0^1 M(x, y)\, dG_0(y) &\leq v, \\ \int_0^1 M(x, y)\, dF_0(x) &\geq v. \end{aligned}\right\}$$

Then v is the value of the game, and F_0 and G_0 are optimal strategies.

When the continuous payoff function is strictly convex in y, there is a simple optimal strategy for the second player, so that G is reduced to a step function, say with the step at $y = c$. The value of the game is then

$$v = \min_y \max_x M(x, y).$$

Similarly if $M(x, y)$ is strictly concave in y.

More information on this subject can be found in the books of Mc Kinsey (1952) and Blackwell & Girshick (1954).

More knowledge is assumed about *stationary stochastic processes*. If x_t is a continuous (in the mean) stationary process of finite variance and with mean zero, its covariance function can be written as

$$r(h) = \mathrm{E}\, x_{t+h} x_t = \int_{-\infty}^{\infty} e^{ih\lambda} dF(\lambda).$$

This is Bochner's representation. $F(\lambda)$ is a bounded non-decreasing function. With this is associated Cramér's representation

$$x_t = \int_{-\infty}^{\infty} e^{it\lambda} dZ(\lambda),$$

where $Z(\lambda)$ is a process with uncorrelated increments, such that

$$\mathrm{E}\,[Z(\lambda') - Z(\lambda'')]^2 = |F(\lambda') - F(\lambda'')|.$$

A process is called purely *non-deterministic* if the manifolds $L_2(x; t)$ spanned by x for all $s \leq t$ have the property that

$$\lim_{t \to -\infty} L_2(x; t) = 0.$$

Such a process can be written as an infinite moving average

$$x_t = \int_{-\infty}^{t} g(t-s)\, d\xi(s),$$

where $g(t)$ is quadratically integrable with respect to Lebesgue measure, and $\xi(s)$ is a stochastic process with uncorrelated increments, with

$$\mathrm{E}\,[\xi(s') - \xi(s'')]^2 = |s' - s''|.$$

The representation is not unique. It is most convenient to choose the predictive form, where $L_2(x;t) = L_2(\xi;t)$, all t, with a notation similar to the one introduced above. Then, the best linear prediction x^*_{t+h} of x_{t+h} when we have observed x_s, $s \leqslant t$, is

$$x^*_{t+h} = \int_{-\infty}^{t} g(t+h-s)\, d\xi(s).$$

The minimum prediction error is

$$\sigma_h^2 = \mathrm{E}\,[x^*_{t+h} - x_{t+h}]^2 = \int_0^h |g(s)|^2\, ds.$$

This is discussed in detail by Doob (1953, Chapter XI).

We use repeatedly known facts about (weak) *convergence of distribution functions, compactness of sets of distributions*, etc. In this context the reader is referred to Gnedenko & Kolmogorov (1954, Chapter 2).

In one proof we use a theorem about *Toeplitz forms*. It can be found in Grenander & Szegö (1958, Chapter 9).

In connection with *linear stochastic differential equations*, we run into the old problem of how they should be interpreted when the derivatives do not exist. A simple way is to demand that the corresponding relation holds after multiplying the equation with an arbitrary continuous function and integrating formally.

The *infinitely divisible distributions* that appear in the text are also discussed by Gnedenko & Kolmogorov (*op. cit.*), where also the representation of Lévy–Khinchin can be found. This may be of use in a more thorough treatment of certain pursuit problems.

In 4.4 we use the notion of a *renewal process*. This is a point process, such that the distances between successive points are independent and identically distributed stochastic variables. This distribution is related to the distribution from a fixed point to the next following (event), see Parzen (1962, Chapter 5).

ACKNOWLEDGEMENTS

I would like to thank the many friends and colleagues with whom I have had many discussions about pursuit problems. These discussions have been very helpful for me when trying to formulate the problems and construct the mathematical models; the latter has been the main difficulty during this work, and I have received many suggestions during our conversations. Among the participants in the discussions I would like to mention G. Borenius, T. Thedéen, and especially S. Danielson, who has shown great interest for this study, and whose helpful criticism I appreciate very much.

The present edition of this report has benefited much from suggestions and additions due to G. Borenius and O. Alvfeldt.

REFERENCES

Blackwell, D., & Girshick, M. A., *Theory of Games and Statistical Decisions*, Wiley, New York 1954.

Doob, J. L., *Stochastic Processes*, Wiley, New York 1953.

Gnedenko, B. V., & Kolmogorov, A. N., *Limit Distributions for Sums of Independent Random Variables*, Addison–Wesley, Cambridge, Mass. 1954.

Grenander, U., A Prediction Problem in Game Theory. *Arkiv Mat.* 3, 371–379 (1956).

Grenander, U., & Szegö, *Toeplitz Forms and their Applications*, Univ. California Press, Cambridge 1958.

Isaacs, R., *A Game of Aiming and Evasion: General Discussion and the Marksman's Strategies*, Rand Corp., RM–1385 (1954 a).

Isaacs, R., *Differential Games*, Rand Corp., RM–1391 (1954 b).

Kelendžeridze, D. L., Theory of an Optimal Pursuit Strategy. *Dokl. Akad. Nauk SSSR;* English translation in *Soviet Math.* 2, 654–656 (1961).

Mc Kinsey, J. C. C., *Introduction to the Theory of Games*, McGraw-Hill, New York 1952.

Parzen, E., *Stochastic Processes*, Holden-Day, San Francisco 1962.

Steinhaus, H., *Definitions for a Theory of Games and Pursuit* (originally published in 1925). English translation in *Quart. Naval Logistics*, 7, 105–108 (1960).

Yovits, M. C., & Jackson, J. L., Linear Filter Optimization with Game Theory Considerations, *J. R. E.*, 1955.

Zięba, A., Fundamental Equations of the Theory of Pursuit, *Trans. II. Prague Conf. Inform. Theory*. 833–835 (1960).

FOA REPORTS

Vol. 1, 1967

No. 1 Torleiv Orhaug, The Modulation Transfer Function of a Random Medium,(FOA 2 Rapport B 2001-51)

2 Bo Lehnert, Den kontrollerade kärnfusionens nuläge och framtidsutsikter (Controlled Thermonuclear Fusion—Its Present State and Possibilities). In Swedish, with summary in English. (FOA 4 Rapport B 4001-21)

3 Lars Götherström, Optimum and Suboptimum Detection of Gaussian Signals in Gaussian Noise. (FOA 3 Rapport B 3003-74(52))

4 Lars-Henrik Andersson and Birgit Gelin, The Separation of Fluorine by Willard-Winter Distillation and Its Determination by Titration with Thorium Nitrate or by Spectrophotometric Measurement. (FOA 4 Rapport B 4002-24)

5 Gustaf Borenius, Sture Danielson, and Birger Jansson, Number of Ways for Choosing an Alternative. A Combinatorial Problem Related to Eulerian Numbers. (FOA P Rapport B 8001-11)

6 Lars-Henrik Andersson and Eva-Britt Baurén, Rapid Spectrophotometric Determination of Plutonium. (FOA 4 Rapport B 4003-24)

Vol. 2, 1968

No. 1 Gunnar R. Grape, Convergence and Cost Minimization in Queuing Systems of the Type (D,M,1). (FOA P Rapport B 8006-11)

2 Staffan Söderberg, Numerical Solution of the Generation of a Hydrodynamic Shock Caused by a Moving Piston. (FOA 4 Rapport B 4008-23)

3 J. R. Lundin, Studies on Cholinesterases in Fish Muscle with Special Regard to a Cholinesterase from Plaice. (FOA 1 Rapport B 1055-34)

4 Ulf Grenander, A Tactical Study of Evasive Maneuvers. (FOA P Rapport B 8005-11; reprint of FOA P Rapport A 126, March 1963)

In preparation

Nils Gyldén and Bo Einarsson, Calculation of Equations of State by Means of the Thomas—Fermi—Kirzhnits Model (FOA 2 Rapport B 2003-23)

Siv Sjögren, Överföring från ortografisk till fonematisk svenska med hjälp av datamaskin. (Translation from Orthographic to Phonematic Swedish by Means of a Digital Computer). In Swedish, with summary in English. (FOA P Rapport B 8007-11)

Lars Götherström, Non-parametric Likelihood Ratio Detection of Noise-like Signals. (FOA 3 Rapport B 3005-57)