AD 677276

GUIDE FOR THE PREPARATION OF PROPOSED TECHNICAL APPROACHES (PTA)

DDC
AUG 2 0 1968
B

PUBLISHED BY THE DIRECTION OF
THE CHIEF OF NAVAL MATERIAL

FEBRUARY 1966

THIS DOCUMENT HAS BEEN APPROVED
FOR PUBLIC RELEASE AND SALE;
ITS DISTRIBUTION IS UNLIMITED

NAVMAT P3910A

Reproduced by the
CLEARINGHOUSE
for Federal Scientific & Technical
Information Springfield Va. 22151

75

Best
Available
Copy

ABBREVIATIONS

ADO	Advanced Development Objective
APP	Advance Procurement Plan
ASN(R&D)	Assistant Secretary of the Navy (Research and Development)
BUPERS	Bureau of Naval Personnel
BUSHIPS	Bureau of Ships
BUWEPS	Bureau of Naval Weapons
CD	Contract Definition
CF	Concept Formulation
CNM	Chief of Naval Material
CNO	Chief of Naval Operations
CNP	Chief of Naval Personnel
COMOPTEVFOR	Commander, Operational Test and Evaluation Force
COSAL	Coordinated Ships Allowance List
DCNO(D)	Deputy Chief of Naval Operations (Development) (Op-07)
DDR&E	Director of Defense Research and Engineering
ECM	Electronic Countermeasures
ECCM	Electronic Counter Countermeasures
EDR	Exploratory Development Requirements
FYFS&FP	Five Year Force Structure and Financial Program
GOR	General Operational Requirement
MPE	Monthly Progress Evaluation
MTBF	Mean Time Between Failures
MTTR	Mean Time To Repair
NAVMAT	Office of the Chief of Naval Material
NEC	Navy Enlisted Classification
NMSE	Naval Material Support Establishment
NOBC	Navy Officers Billet Code
NRR	Navy Research Requirements
NTDS	Naval Tactical Data System
OMN	Operation and Maintenance, Navy
OPN	Other Procurement, Navy
OPNAV	Office of the Chief of Naval Operations
OSD	Office of the Secretary of Defense
PCP	Program Change Proposal
PDA	Principal Development Activity
PDP	Project Definition Phase
PMP	Project Master Plan
PERT	Performance Evaluation Review Technique
PTA	Proposed Technical Approach
RDT&E	Research, Development, Test and Evaluation
RFI	Radio Frequency Interference
SCN	Shipbuilding and Conversion, Navy
SECNAV	Secretary of the Navy
SOR	Specific Operational Requirement
STINFO	DoD Scientific and Technical Information Program
TDP	Technical Development Plan
TECHEVAL	Technical Evaluation
TSOR	Tentative Specific Operational Requirement
WBS	Work Breakdown Structure

ACCESSION for
CFSTI WHITE SECTION
DDC BUFF SECTION
UNANNOUNCED
JUSTIFICATION
BY
DISTRIBUTION/AVAILABILITY CODES
Dist. AVAIL. and/or SPECIAL
2

BLANK PAGE

GUIDE
FOR THE PREPARATION OF
PROPOSED TECHNICAL APPROACHES
(PTA)

PUBLISHED BY THE DIRECTION OF
THE CHIEF OF NAVAL MATERIAL

FEBRUARY 1966

THIS DOCUMENT HAS BEEN APPROVED
FOR PUBLIC RELEASE AND SALE;
ITS DISTRIBUTION IS UNLIMITED

NAVMAT P3910A

TABLE OF CONTENTS

		Page
	Introduction	v
	Proposed Technical Approaches Format	xi
Section 1.	Foreword	1-1
2.	Description	2-1
3.	Operational Diagram	3-1
4.	Block Diagram	4-1
5.	Cost, Time, and Performance Envelopes	5-1
6.	Degree of Risk	6-1
7.	Compatibility	7-1
8.	Manpower Considerations	8-1
9.	Reliability and Maintainability	9-1
10.	Summary and Recommendations	10-1
11.	References	11-1
12.	Appendix(es)	12-1
Appendix A.	Current OPNAVINST of the 3910.8 Series*	A-1
B.	TDP Guide—Section 7, Block Diagram	B-1
C.	TDP Guide—Section 10, Reliability and Maintainability Plan	C-1

* Principal Development Activities should insert a copy of the current edition of OPNAVINST 3910.8 series as Appendix A to this guide.

LIST OF ILLUSTRATIONS

Figure		Page
1	The Steps in System Development	vii
2	Sample PTA Cover Sheet	xii
3	Sample PTA Table of Contents	xiii
4	Information Flow in Generation of PTA's	xv-xvi

For sale by the Superintendent of Documents, U.S. Government Printing Office
Washington, D.C. 20402

Price $1.50

RECORD OF CHANGES			
CHANGE NO.	DATE OF CHANGE	DATE ENTERED	BY WHOM ENTERED

INTRODUCTION

General

The purpose of this guide is to provide guidelines for the preparation of Proposed Technical Approaches (PTA) documents and an explanation of the need for the information required therein. It is intended for use by all who have an interest in the preparation and review of PTA's. It is a companion to the "Guide for the Preparation of Technical Development Plans (TDP)" (NAVMAT P3910) published by direction of the Chief of Naval Material (CNM). It is analogous to the TDP guide in that it is intended as a guide rather than an inflexible set of rules. However, adherence to the general scope and intent of the suggestions provided herein should provide responsive and comprehensive documents including all of the information usually required in a PTA. Each section of this guide is organized in accordance with the instructions for PTA preparation described in OPNAVINST 3910.8 Series. A check list is found at the end of each section which emphasizes the major points which should be covered in the corresponding PTA section.

Attention is invited to the Handbook for the Preparation of Proposed Technical Approaches (PTA) (NAVMAT P3910A SUP-1) which contains more detailed guidance for individuals engaged in PTA preparation.

Description and Purpose of PTA

A PTA document presents alternative approaches for a system or component concept stated or implied in a General Operational Requirement (GOR). PTA's are prepared for the Chief of Naval Operations (CNO) by the Naval Material Support Establishment (NMSE) or other offices or bureaus, either as a required response to a Tentative Specific Operational Requirement (TSOR) or voluntarily in response to a GOR. Both the GOR and the TSOR are promulgated by CNO. An explanation of the purpose and relationship of the various Research, Development, Test, and Evaluation (RDT&E) requirements and reporting documents is contained in OPNAVINST 3900.8 Series. Figure 1 depicts the sequence of evolutionary steps required in systems development and the place that the PTA and other official documents occupy in the process. Voluntarily submitted PTA's may be submitted at any time, while those responsive to a TSOR are due within 90 days of the date of the TSOR. However, the CNO is not bound in any way to respond to a PTA with an ADO or SOR.

The Marine Corps independently develops requirements for material which is used primarily for its own missons. Although the greater number of PTA's, by far, will be generated for missions under the purview of CNO, the contents of this guide are fully applicable to PTA's addressing Marine Corps requirements.

A PTA serves four needs:

a. It provides a formal means by which new technology is introduced into naval warfare systems.

b. It presents certain technical and financial information to the CNO on which to base a decision to commence a development program; therefore;

c. It provides technical and financial information necessary for preparation of a Specific Operational Requirement (SOR), or Advanced Development Objective (ADO) as appropriate.

d. It provides the initial estimates of development and production costs in order to determine whether a formal Contract Definition will be required. In the event the proposed development appears to meet the criteria for Contract Definition, the PTA will be a necessary step in meeting the prerequisites for Contract Definition.

A PTA normally contains a description of the problem to be solved with reference to the pertinent GOR or TSOR, and includes a functional description of each alternate system or component concept as well as a diagram of typical operational usage and a functional flow diagram of included sub-systems and associated systems. It discusses operational effectiveness in terms of performance, reliability, operability, and maintainability. It contains trade-off analyses of the various alternative approaches in terms of effectiveness, development time and cost. It includes a recommendation as to the RDT&E Category under which the development should be pursued as well as to the preferred technical approach of the several presented. In addition, for management planning, the PTA contains a preliminary schedule of major milestones of development shown in time sequence and an estimate of funds needed each year. Personnel implications of proposed systems are addressed as well.

Importance of PTA

Since the PTA is the initial Research and Development document which forecasts procurement workload in R&D, it is of considerable concern to procurement planners. In all probability, the personnel implications of a proposed system will be addressed for the first time in the PTA proposing the system. A PTA is often used as a selling document for a development that the originating organization considers worthwhile. As such, it is in competition with many other demands for development money. In general, the better the PTA the more it will cost to produce. However, the relative expensiveness of the PTA must be considered in relation to the desire to "sell" the development addressed.

The Steps in System Development

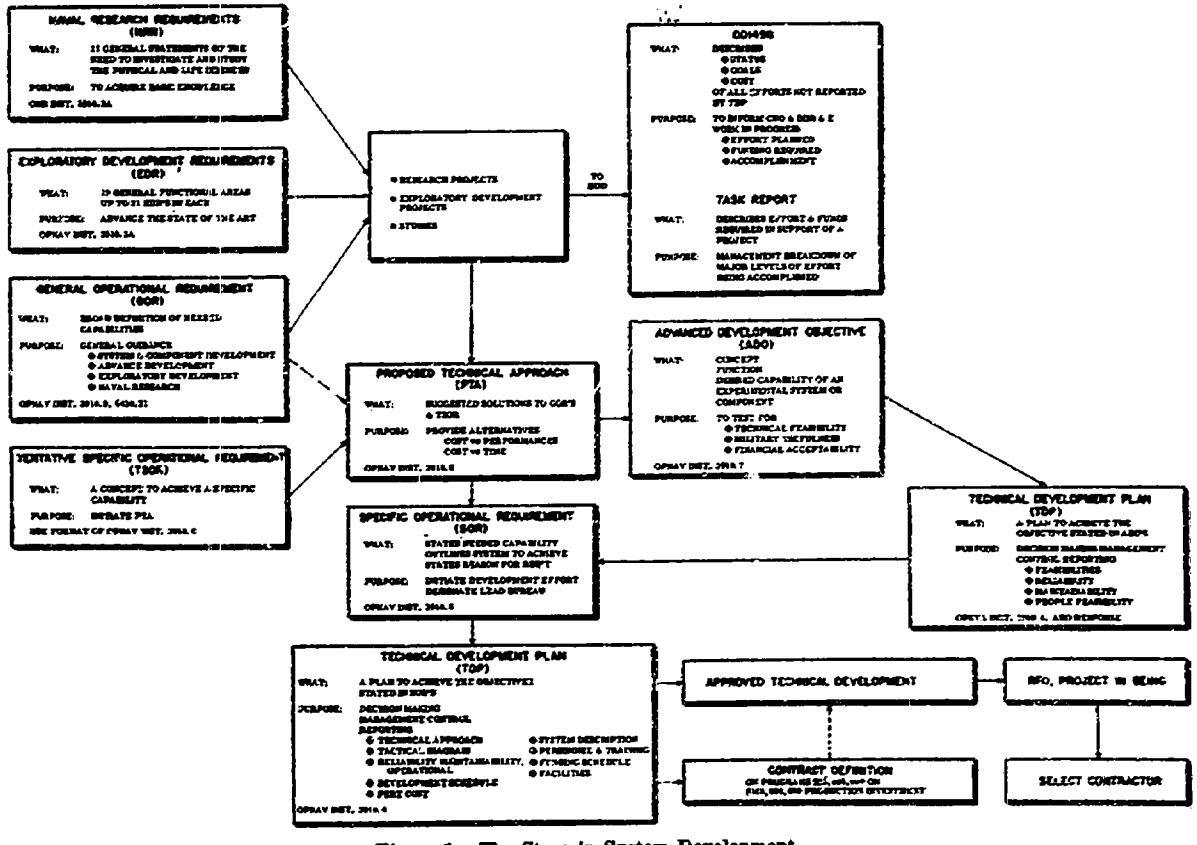

Figure 1. The Steps in System Development.

Submittal of PTA's

The PTA documents are forwarded to CNO via CNM. Organizations within the NMSE are encouraged to submit PTA's voluntarily in response to a GOR. Naturally, all such PTA's do not lead to issuance of an SOR or TSOR, at least on their initial submission. As more is learned, PTA's may be updated and resubmitted. To expedite the review of resubmitted PTA's, the nature of the change should be indicated in the forwarding letter and the document itself. This should be done in the document by indicating a revision date on the cover sheet and inclusion of an "Index of Effective Pages" similar to that used in a TDP.

Experience to date with processing documents including PTA's has demonstrated that CNM approval can be expedited by informal consultation between the Principal Development Agency (PDA) and NAVMAT during the draft copy stage.

"Advance Copies"

As a general rule, "advance copies" should not be circulated outside the NMSE and designated support activities before review and approval by CNM. This is not intended to interfere with the free interchange of information between the Material Bureaus and OPNAV. However, embarrassing situations and unnecessary added workload for CNO can result from free circulation of documents which may not be subsequently approved by CNM. When specifically requested by higher authority, a draft copy of a PTA may be submitted as back-up data. It should be identified as a draft copy in all correspondence and use of the document, and should display prominently the following information on the cover and title page, "DRAFT COPY, HAS NOT BEEN APPROVED BY CNM".

Variations in PTA's

The scope of a PTA, and to some extent its tone, will vary according to the type of requirement document to which the PTA replies, and also to the type of requirement document that the PTA is expected to elicit from the Chief of Naval Operations (CNO). Programs of great diversity are sponsored by the NMSE resulting in a rather wide variation in PTA documents. The maturity of a development influences the nature of a PTA addressing it. The PTA for a System concept will ordinarily be different in scope from that of a PTA for a component or "building block" which may later be combined with other "building blocks" to produce a system. The variations possible are discussed in the sections which follow.

All PTA documents speak to a "Base Line" system or device, i.e., the system concept or device which serves as the model against which the alternatives are to be compared and trade-offs made. In a PTA responding to a TSOR, the "Base Line" system or device is described in the TSOR in terms of operational concept, threat to be countered or noncombatant application, desired performance characteristics, compatibility requirements and such other attributes as may be deemed important. The unsolicited PTA, on the other hand, must postulate this "Base Line" system concept or device. It usually follows then that the "Base Line" system concept or device presented in such a PTA is also the one which the preparing activity believes to have most merit. In either case, however, the basic requirement for the presentation in the PTA of alternative approaches must be met.

Establishing User-Producer Dialogue

Complex systems involve so many individuals and offices on both the user and producer sides of the house that serious "language gaps" can develop. Therefore, the user-producer dialogue should be started as soon as possible in a development so that clear channels of communication can be established.

In particular, increased emphasis on reliability, operability, maintainability, etc., has made it absolutely imperative that human factors experts, both in the Material Bureaus and in the Bureau of Naval Personnel, be consulted during the formulative period of all developments.

Updating of Guide

It is intended that this guide will be periodically revised and updated to reflect the varied needs of groups within the NMSE.

This publication has been reviewed and approved in compliance with SECNAVINST 5600.16.

Deputy Chief of Naval Material for
Development/Chief of Naval Development

PROPOSED TECHNICAL APPROACHES FORMAT

General

Enclosure (2) of OPNAVINST 3910.8 Series presents a suggested format for presentation of the information required for the PTA. It is generally similar to that for a TDP but is somewhat abbreviated and rearranged to better suit the different character of the PTA document. The TDP treats a system which has been singled out for development, while the Proposed Technical Approaches document, as its name implies, must compare a number of approaches and show trade-offs in such parameters as effectiveness, cost and development time. Other formats may be used provided that all of the required information is presented clearly and there is a good reason for such deviation. Improved "brochuremanship" is not considered to be a good reason. In cases where a great deal of development has been done, the PTA format may adhere to the TDP format as this will facilitate later transition from PTA to TDP.

Cover Sheet and Table of Contents

A sample cover sheet containing the required information is shown in Figure 2. It is highly desirable that all covers be uniform so that each PTA can be quickly and accurately identified. Figure 3 shows a sample table of contents for the suggested format.

Generation of Information for PTA

Figure 4 is a flow chart showing the sequence of generation of the information required in the finished PTA.

Format Sensitivity to Contents

As pointed out in the Introduction, the scope and tone of various PTA documents will differ. However, the basic informational content and the format should be essentially the same whether it is solicited or unsolicited, whether it deals with a complete system or a subsystem or lesser element, and regardless of the type of response (ADO, SOR or other directive) sought from CNO. Differences in the treatment to accommodate these several circumstances should be in the nature of "slants" brought about by minor differences in the presentation of the technical material.

CLASSIFICATION

PTA (Number) (See Note 1)

PROPOSED TECHNICAL APPROACHES

for

(Program Name) (See Note 2)

Supports GOR/TSOR Number_____ (See Note 3)
Project No._____

Submitted by

(Name of Bureau, Office, etc.)
Department of the Navy
Washington, D.C., 20360

Original Issue _____.

Last Previous Revision_____
(Omit if original or first revision)

Current Revision_____.
(Omit if original)

Copy No. _____ of _____ Copies (For Secret and Top Secret)

CLASSIFICATION

Note 1: See OPNAVINST 3910.8 Series for PTA Numbering System. Unsolicited PTAs will provide all elements of the designation except the second two numbers which are unique to the individual requirement under a GOR. Bureau numbering systems may also be shown until an assignment is made by CNO.

Note 2: Identify system by title of TSOR if issued. When Acronyms are used in the title the words from which they are derived will appear in parenthesis after or under the word as appropriate.

Note 3: Use only if Project No. is different from PTA No.

Figure 2. Sample PTA Cover Sheet.

TABLE OF CONTENTS

Section I. Index of Effective Pages (omit if original submission)
1. Foreword
2. Description
3. Operational Diagram
4. Block Diagram
5. Cost, Time, and Performance Envelopes
6. Degree of Risk
7. Compatibility
8. Manpower Considerations
9. Reliability and Maintainability
10. Summary and Recommendations
11. References

Appendix(es)

Figure 3. Sample PTA Table of Contents.

Philosophy on Content

It is sometimes argued that a PTA document, and particularly the unsolicited, subsystem-or-lesser-component type, need not and sometimes cannot respond in any way to the area of performance or other general design attributes and operational considerations such as reliability, maintainability, operability, compatibility, manpower and training considerations, etc. Although it is conceded that there are instances wherein a discussion on some of these topics would be pointless, this should be the exception rather than the rule. It must be remembered that a PTA speaks only to approaches and not designs, and that whereas the worth of these approaches cannot be measured quantitatively and in some instances even predicted, a qualitative assessment of their potential in these areas must be presented if the potential user, CNO, or other reviewing authorities are to be in a position to rule in favor of undertaking the project. A simple demonstration or postulation of technical feasibility alone is totally inadequate to support any decision. The fact that something can be achieved in a laboratory does not support a decision to proceed further if there is no basis for believing that the attributes against which effectiveness, and hence worth, of a device is to be measured, are not also possible of achievement to an acceptable level. Discussion on these topics, and good, experienced, engineering estimates of the potential inherent in the "Base Line" and alternative approaches, is therefore required.

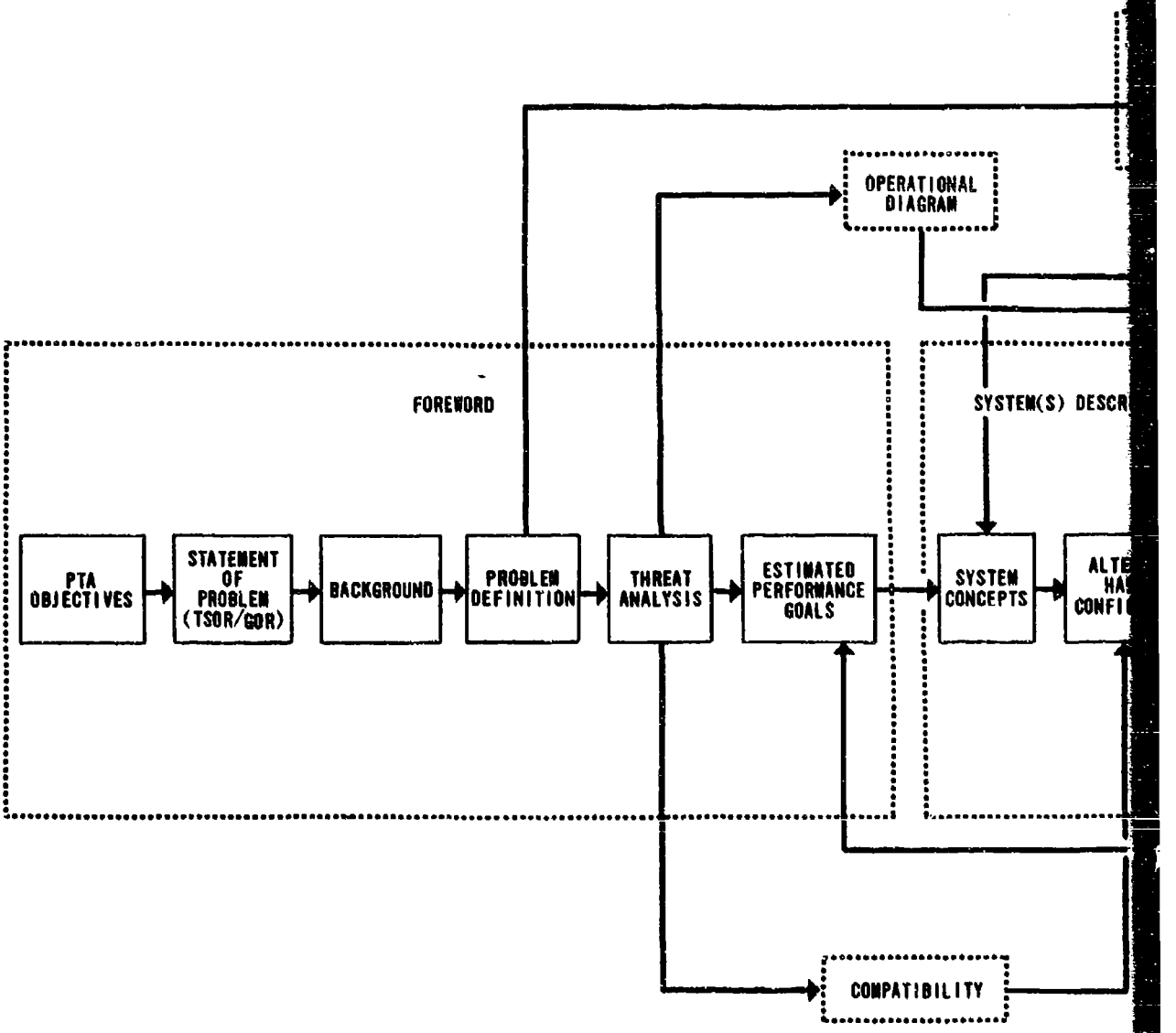
OPERATIONAL DIAGRAM
FOREWORD
SYSTEM(S) DESCR
PTA OBJECTIVES
STATEMENT OF PROBLEM (TSOR/GOR)
BACKGROUND
PROBLEM DEFINITION
THREAT ANALYSIS
ESTIMATED PERFORMANCE GOALS
SYSTEM CONCEPTS
ALTE HA CONFI
COMPATIBILITY

A

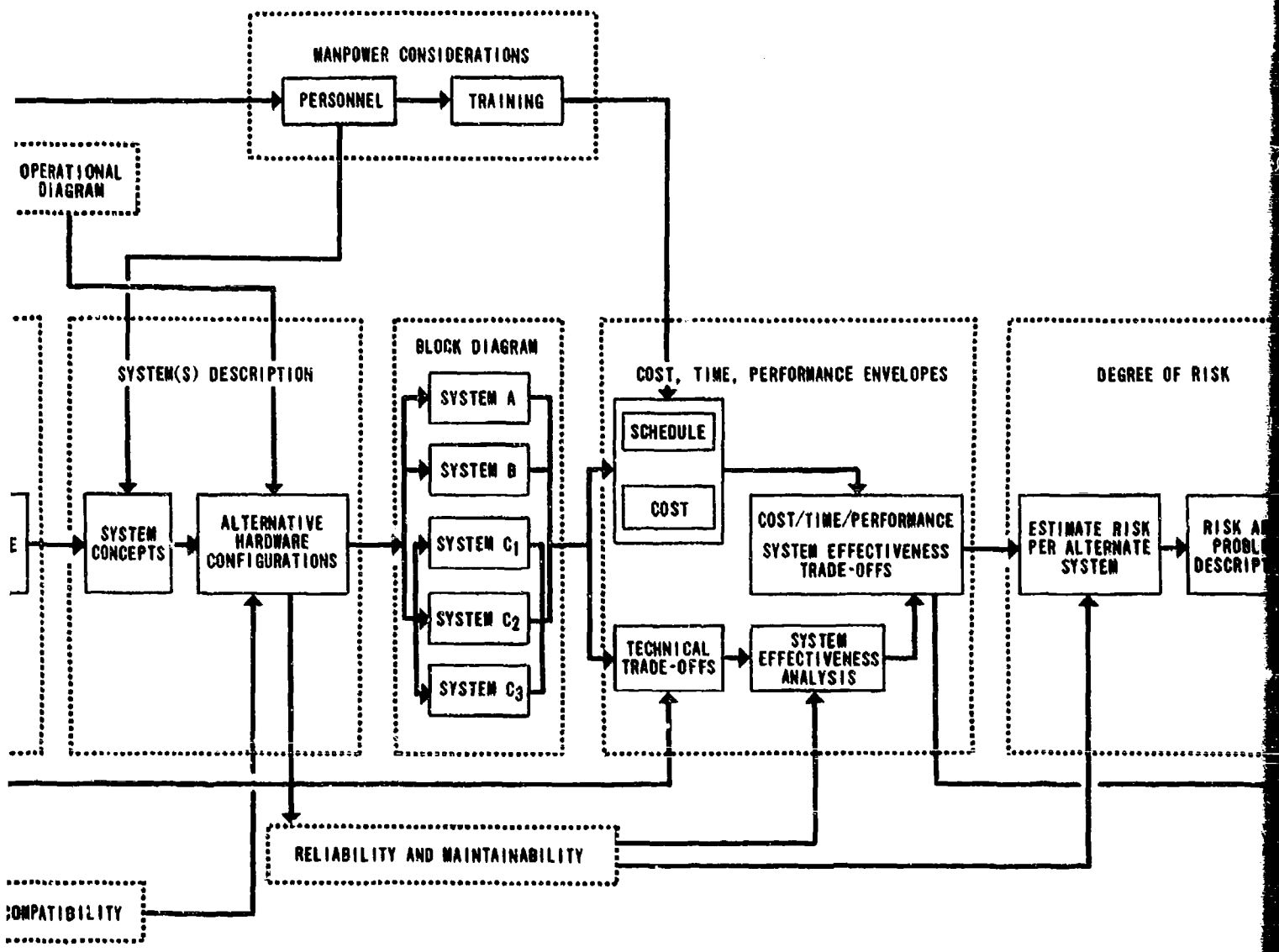

Figure 4.

INFORMATION FLOW IN THE
PROPOSED TECHNICAL A
(PTA)

B

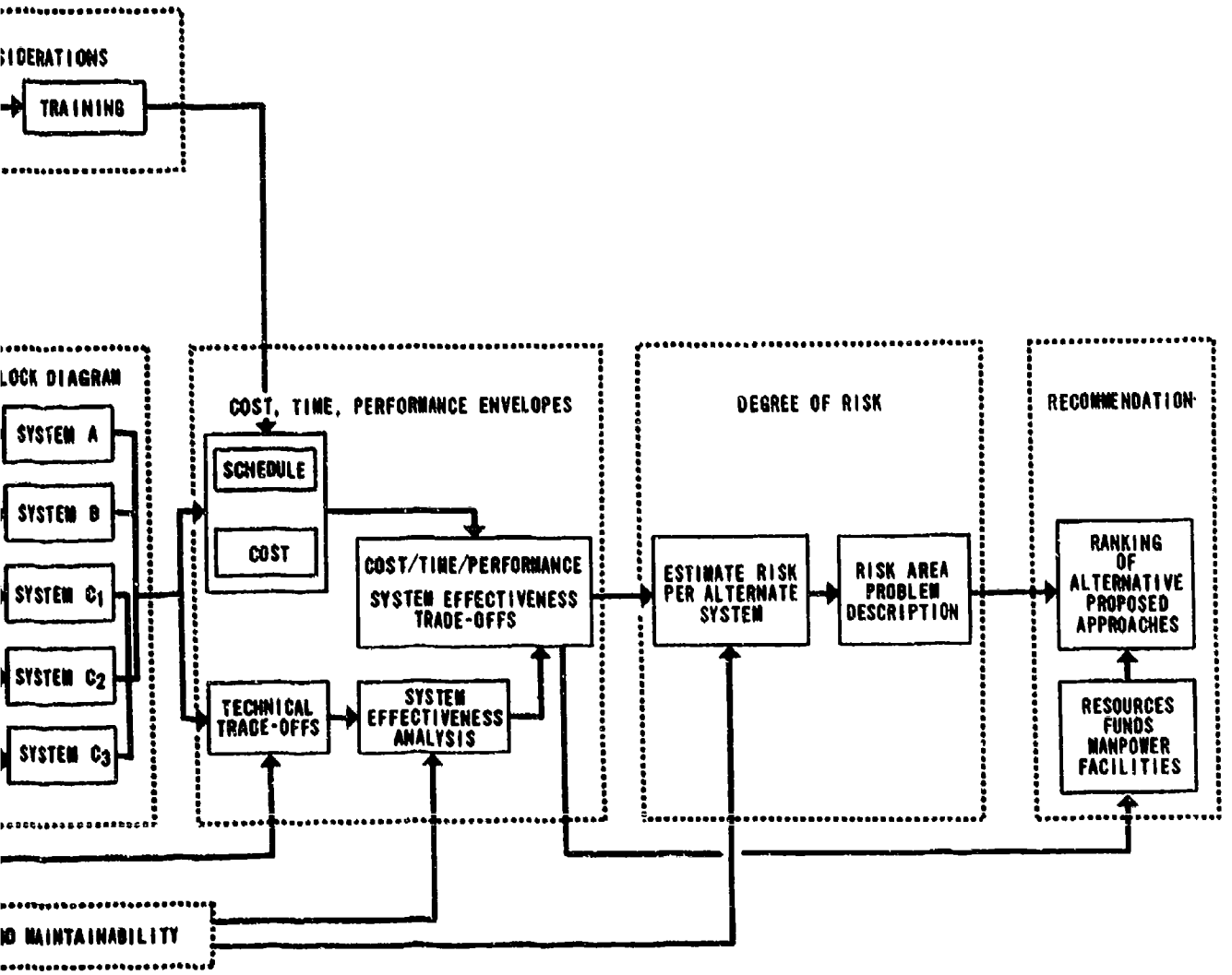

Figure 4.

INFORMATION FLOW IN THE GENERATION OF PROPOSED TECHNICAL APPROACHES (PTA)

SECTION 1

Foreword

1.0 General

This section is one of the most important in the entire document as it sets the framework and indicates the need for the development. It should, therefore, be most carefully done. It must cover the required information thoroughly but briefly, making reference to the following sections for details.

1.1 Content

The Foreword should disclose the nature and extent of the operational problem to be solved, and provide such background information as might be available and appropriate to assist in developing and evaluating approaches for its solution. For the PTA solicited by means of a TSOR, most of this information can be provided by the simple expedient of including and extracting the TSOR document itself. For the unsolicited PTA, some of this information may be extracted from the GOR, but usually some must also be generated and provided by the preparer in sufficient detail to establish the qualitative/quantitative performance and compability requirements, capabilities and attributes of the "Base Line" system or device.

This section should discuss the nature, extent and status of the research and exploratory development programs supporting the program. This may be in the form of a historical brief covering the evolution of the program. It should discuss, in appropriate detail, any and all known foreign and domestic programs, projects, tasks, etc. which directly or indirectly support or otherwise relate to the project under discussion, and include a statement as to which of these can be used in this development. Any major problem areas, as well as proposed or existing programs for their solution, should be mentioned here with reference to details given in later sections.

1.2 Considerations Determining Content

It must be constantly kept in mind in this section and those that follow, what response is expected from CNO. The informational content of the PTA must conform to this. The required contents of the various requirements documents are included in the following documents: General Operational Requirement (GOR), OPNAVINST 3910.9 Series; Specific Operational Requirement and Tentative Specific Operational Requirement (SOR and TSOR), OPNAVINST 3910.6 Series; and Advanced Development Objective (ADO), OPNAVINST 3910.7 Series.

1.3 Need for Development

In order to emphasize the extent of the need for the proposed development, the main requirements as posed by the threat (or deficiency) should be listed in a table opposite the capabilities of existing and planned systems (or components). An analysis of the most significant discrepancies should be made. In many cases the systems presently in the fleet will appear very deficient. It should be remembered that many of these were designed to meet a lower order threat. Therefore, it is best to quantify such deficiencies and although they should not be minimized, at the same time, it is more prudent not to unnecessarily criticize the present systems.

Foreword Check List

1. Statement of the operational or technical problem to be solved.
2. Contains statement of whether the PTA is solicited or unsolicited.
3. For solicited PTA:
   a. Requirement documents answering to
   b. Summary of requirements
4. For unsolicited PTA:
   a. GOR answering to
   b. System or component development
   c. Performance required
   d. Compatibility required
5. Background for development
   a. Foreign and domestic programs
   b. Studies
   c. Exploratory development

BLANK PAGE

SECTION 2

Description

2.0 Objective and Content

The objective in this section is to tell briefly exactly what is proposed to be developed. For each alternative approach considered, there should be a brief but concise presentation of how it functions operationally and what its capability and limitations are seen to be. The temptation to justify or push any system approach should be avoided in this section, although it may be desirable to designate a "Base Line" system (or device) against which to compare other alternative approaches. To clarify the explanations, reference may be made to the Operational Diagram and Block Diagram which usually follow. This should be a fairly short section since detailed performance and compatibility considerations will be covered in later sections. The most concise way of depicting this and the method which should be used, is a table comparing the major requirements posed by the operational threat listed opposite to the characteristics and capabilities of the proposed solutions.

2.1 Considerations for Component Development

For the "Building Block" type of development, there should be a detailed discussion of technical problems posed by the several associated operational problems, the details of which may be discussed in a more general way than for systems designed for specific operational use. This applies only to the unsolicited PTA involving subsystem or lesser component candidates for advanced development status. It provides insight into the main and other attractive operational system applications foreseen for the device. The solicited type PTA, on the other hand, replies to a specific operational problem and will normally be more precise and narrow in scope.

Description Check List

1. Nature of development.
2. Operational function of "Base Line" system and each alternative system.
   a. Capabilities
   b. Limitations
3. For component development ("Building Block") unsolicited PTA.
   a. Technical limitations posed by operational problems.

SECTION 3

Operational Diagram

The Operational Diagram should be a rather simple drawing showing the main elements of the system and associated systems being used in an operational environment. It should be carefully conceived and clearly and artistically rendered to quickly orient the reader to the usefulness of the proposed system.

The Operational Diagram should be labeled using the same terminology used in the Operational Brief and while it may be explained in the Operational Brief, it should be reasonably self-explanatory.

Operational Diagram Check List

1. Operational environment clearly depicted.
2. Most usual use of development shown.
3. Enough information shown to make situation immediately apparent.
4. Pictorial quality good.

SECTION 4

Block Diagram

4.0 Purpose

The Block Diagram provides a graphic representation of the essential "Building Blocks", subsystems, equipments, components, and personnel which constitute the system (or device) to be developed showing their functional relationship, one with another as well as with other associated systems upon which the system is dependent for inputs, or which in turn are dependent upon the system for inputs. This diagram supplements the functional description given in Section 2, Operational Brief. Details of interactions with associated systems is covered in Section 7, Compatibility.

4.1 Applicable Instructions

The Block Diagram instructions and examples given in the TDP instruction, OPNAV 3910.4 Series, and the TDP Guide are equally applicable for the PTA. Section 7, Block Diagram, of the TDP Guide is reproduced as Appendix B of this guide.

4.2 Problems with Previous PTAs

Observation of a number of such diagrams, however, has indicated that this is perhaps the least understood feature of either PTA or TDP. One of the main faults has been an attempt to show too much on one diagram, resulting in some confusion. More than one diagram can be used when necessary. Only the main interactions of sub-systems and associated systems should be shown. A great many lines running in all directions is very confusing. Subsystems which normally are combined into a functional unit should be so grouped in the diagram(s).

Block Diagram Check List

(See "TDP Check List, Section 7, Block Diagram" reproduced in Appendix B)

1. Representative flow diagram of interaction of major parts.
2. Direction of actions and interaction of major parts.
3. Major subsystems only in each diagram.
4. Only major actions and interactions shown on each diagram.
5. Can each diagram be rather quickly understood?
6. Are interactions in sub-system shown in auxiliary diagrams?
7. Are human functions in the system clearly shown?

SECTION 5

Cost, Time, and Performance Envelopes

5.0 General

This section is the very heart of the PTA document. Acceptance of a proposed development is largely determined by its cost, timeliness and effectiveness against an anticipated threat when compared to competing system concepts or devices. Novel and improved approaches cannot be justified for development unless they show a considerable increase in cost-effectiveness over present systems.

5.1 Need for Alternate Approaches

The reason for the present emphasis on approaches is to be found in the customary relationship of user and producer. The user (CNO) s more likely to be satisfied with the product when he can choose from among several alternatives supplied by the producer (NMSE). CNO must have and use this prerogative. He is *the* expert on operational needs, not CNM or the material bureaus in the NMSE. The NMSE must provide enough material to allow CNO to choose an adequate technical approach to meet each operational requirement.

There are several benefits to be gained from presentation of a number of technical approaches to the solution of an operational problem. One is the increased flexibility allowed in making the final choice. Another is that the Material Bureaus by their very nature may see problems in a narrower focus than does CNO. The Bureaus may see as the best choice that system which is most refined technically provided its cost is within reason. However, the final choice must be made on the basis of many factors; technical, fiscal, political diplomatic climate, personnel ceilings, etc. In the give and take of budget apportioning process, it could happen that a very worthwhile but relatively expensive system would not be chosen for development, whereas, a less costly but only slightly inferior system could be developed to meet the same requirement resulting in an increase in the overall effectiveness of our forces.

5.2 Basis for Cost Estimates

Cost estimates must be made for life of the program including RDT&E, production, delivery, installation, operation and support. Also included will be costs for personnel research, training equipment, and personnel training costs for operator and maintenance personnel.

5.3 Possible Trade-offs

Although the claim is sometimes made that there is only one way that certain requirements can be met, this view may be based on a lack of effort or a lack of imagination. Even assuming that one can find a requirement for which only one unique approach is apparent, some trade-offs should be possible. For example, a given system or equipment may be designed to do a given job at different levels of performance or reliability (and cost). In general, the shorter the development time allowed, the higher the development cost. Also, the military worth usually varies somewhat with the introduction date. It should be abundantly clear that it is impossible to design anything of real value without consideration of effectiveness, cost and time. In the past, many of the trade-offs and optimization of design factors have been done more or less subconsciously by the designer with the various factors weighted by his own experience. What is now required is that the design factors, cost factors, development time, and effectiveness based on performance and military environment may be identified and quantified, that meaningfull trade-offs be made, and that the rationale for optimization be shown.

5.4 Sources of Data

The PTA instruction is very lenient in allowing almost any reasonable source of data down to and including conjecture. An educated guess is considered better than no information at all. It stipulates, however, that the source of all data be stated. All assumptions made should be clearly defined. Often, it is possible early in a development to obtain meaningful performance ratios between systems when it is actually impossible to obtain the exact magnitude of performance of any one system. Therefore, a plea that any development is in too early a state to provide trade-offs can hardly be justified. In addition to the sources of background information referred to in paragraph 1.1, many other sources of data are available including Navy laboratories, other NMSE organizations, paid contractor studies, and unsolicited contractor proposals, other services and foreign developments. The Bureau of Naval Personnel and the Navy Training Devices Center can provide valuable inputs on human problems. Some information may be available from the Department of Defense Scientific and Technical Information Program (STINFO).[1]

[1] See DODINST 5100.36, 5129.43 and 5100.38.

5.5 Contents of Section

This section should discuss subsystem, equipment and component technical approaches considered in terms of the parameters (cost, time, performance and other attributes including size and weight) which establish their individual merit, as well as their potential contribution to the effectiveness (or lack thereof) of both the "Base Line" and alternative systems or device. Responsiveness to, but not necessarily agreement with, the TSOR expressed requirement in the "Base Line" system or device is mandatory. If, for any reason, none of the subsystem, equipment, or component technical approaches presented are able to provide any of the qualitatively and quantitatively expressed characteristics in the TSOR, this fact should be noted and the departure explained. It should provide a comprehensive development and funding schedule by fiscal years for each subsystem, equipment or component shown in the Block Diagram of the "Base Line" system, as well as all supporting effort that would be required in the management of the project. Differences in the time and cost estimates for alternative systems or devices may be shown in separate diagrams, or as addenda or modifications to the diagram of the "Base Line" system.

Since time and cost considerations figure largely in the decision making processes attending the entry of a new development project into the Five Year Force Structure and Financial Program (FYFS&FP), it is essential that these factors be realistically assessed and that no elements of cost be overlooked. Although the estimates presented at this time are subject to change when and if ADOs or SORs are issued for the preparation of TDPs, they must not be optimistically represented in order to "sell" the project.

It is imperative that the various comparisons and trade-offs be clearly displayed in such a way that differences in design parameters, configuration, physical size, weight, performance, cost, effectiveness, development time, etc., can be easily and quickly compared. Tables, line charts and graphs, as well as pictorial size comparisons and other visual displays, should be used where appropriate. Although detailed explanation of the figures should be found in the text, they should in general be self-explanatory.

5.6 Other Considerations

There are a number of other considerations which affect the overall operational effectiveness or overall desirability of a system or development. These considerations include the degree of risk, logistics, compatibility, countermeasures, environmental, reliability, vulnerability, maintainability, operability, test and evaluation, training and other manpower considerations. These are covered in the four sections of this guide that follow. Simplicity is an important virtue which must be considered in all future developments.

Cost, Time, and Performance Envelopes Check List

1. Cost[1] versus development time of "Base Line" and alternative systems.
2. Cost[1] versus performance of "Base Line" and alternative systems.
3. Performance of "Base Line" alternative systems versus performance of programmed systems.
4. Cost[1] effectiveness comparison of "Base Line," alternative, and programmed systems (either quantitative or qualitative, whichever is most appropriate and/or possible).
5. Selection factors used in designation of threat and other military environment conditions.
6. Sensitiveness of performance and effectiveness to change in threat.
7. Rationale for selection preferred system. Has consideration been given to simplicity, degree of risk, logistics, compatibility, environmental factors, reliability, vulnerability, maintainability, operability, test and evaluation, training and other manpower factors?
8. Basis for data used in analyses.
9. Responsiveness to requirements documents.
10. Development and funding schedule by fiscal years for all major parts.
11. Comparisons of physical characteristics of "Base Line," alternative and programmed systems.

[1] All cost elements related to the total cost of ownership for the life of the program should be considered.

SECTION 6

Degree of Risk

6.0 General

PTA's in the past have sometimes been based on very tenuous data but were written in such a way that the fulfillment of the basic requirement seemed practically assured. If this leads to issuance of a SOR, a great deal of difficulty may ensue. CNO must be given as accurate an appraisal as possible of the prospects for success for the proposed development.

6.1 Contents

In this section an estimate of the degree of risk involved for each of the approaches will be presented. In assessing the degree of risk involved it should be stated whether primarily engineering, rather than experimental, effort is required, and whether the technology is sufficiently in hand to proceed with a systems development. The principal developmental problems or high risk areas inherent in the "Base Line" and alternative system approaches under consideration, should be listed and discussed in their order of importance. For PTAs submitted in support of an ADO oriented project, this section should also be used to specify the nature and extent of the feasibility program being proposed as well as to specify the end (or decision) point of the project, with reasons why the specific program and end points were chosen. This is in contrast to a PTA supporting an SOR oriented project, in which case the emphasis of this section should be mostly on a treatment of the principal development problem areas.

6.2 Minimizing Risk

It is usually advantageous from the degree of risk standpoint to make maximum use of existing, proven components, designs and techniques particularly where only marginal improvement can be obtained from newer developments. There are usually advantages, also, in the areas of cost, logistics and personnel training. All such usage should be discussed prominently.

6.3 Dependence on other Developments

The extent to which the success of a particular development hinges upon other developments must be assessed. Where the development addressed in a PTA is to any degree dependent on other programs, the PTA should give all pertinent available particulars concerning this dependence, proposed methods for monitoring progress of the other development, and the possible courses to redirect the dependent program should the other program fail to satisfy its wants.

6.4 Plans to Meet Exigencies

The PTA should candidly discuss the effect of failure of any particularly difficult design goal of the development to materialize as planned. The trade-offs of possible "fixes" should be addressed.

Degree of Risk Check List

1. Estimate of degree of risk for all approaches.
2. Principal development problems and/or high risk areas.
3. Nature and extent of feasibility program for ADO-oriented Projects.
4. End point or Decision point for ADO-oriented Project with reasons for choosing.
5. Dependence on other developments and proposed methods of hedging if these developments fail to materialize.
6. Plans to meet exigencies if high risk developments do not materialize as planned.

SECTION 7

Compatibility

7.0 Equipment Interfaces

The interfaces between the equipment proposed to be developed in the PTA and other associated equipment must be defined. Where it is impossible to concisely define an interface, the program planned to resolve the problem areas should be described. The current status and cognizant agency of all associated systems and sub-systems should be indicated in a table. The effect of associated sub-systems in meeting the system requirements should be defined. Steps required to coordinate the new development with cognizant agencies for associated equipments should be discussed. Any significant change in military characteristics of existing ships, vehicles, equipment, or facilities should be indicated.

7.1 Electromagnetic Interference

The proliferation of various equipments using portions of the electromagnetic energy spectrum, has made it imperative that each new piece of equipment or system be critically examined for its possible interaction with other existing or projected usage of the electromagnetic spectrum.[1] This must be done at the earliest possible time in the development process for new equipment. Therefore, a PTA for such systems or equipment must address itself to the problem using all available data. This type of development must be coordinated with other services and all other users of the electromagnetic spectrum. Compatibility also relates to other interface problems such as space required and available, special support equipment requirements, special environmental requirements, shock and vibration requirements, and other requirements such as electrical current, water, steam, ventilation, fuel, etc. Weight may be a problem depending upon where the equipment is to be used. Toxic fumes or dangerous radiation may be produced. All these and many more must be considered and discussed candidly in the PTA.

[1] See OPNAVINST 3910.6 Series for Electrical/Electronic Compatibility requirements.

7.2 Other Compatibility Problems

In addition to the interface problems already mentioned, the logistical support required by the new development must be considered. The degree of susceptibility to countermeasures is another area of concern that should be addressed. And perhaps the biggest compatibility question of all is just how well will a new system fit into the overall Navy forces in terms of its ability to support and augment other systems, and how much support does it require from other systems. When it is designed to fill a gap between other systems, does it barely do the job or does it overlap the other systems? In the case of overlapping systems, is the redundancy useful and desirable operationally and costwise?

A question of the greatest importance considering the large spectrum of possible combat situations facing the Navy, is the compatibility of the system to off-design conditions of operational environment, and the sensitivity of the system's effectiveness to these conditions which are different from those for which the system is optimized.

Compatibility Check List

1. Electromagnetic energy spectrum compatibility investigations and coordination with other using agencies, including reference to appropriate standards.
2. Space required and available.
3. Weight limitations.
4. Special support equipment.
5. Environmental factors.
   a. Humidity
   b. Temperature
   c. Pressure requirements
6. Shock and vibration (including noise).
7. Electric current requirements.
8. Water requirements.
9. Steam requirements.
10. Ventilation requirements.
11. Fuel requirements.
12. Emission Control (EMCON) requirements.
13. Hazards of Electromagnetic Radiation to Ordnance (HERO) requirements.
14. Fire protection requirements.
15. Toxic fumes produced.
16. Harmful radiation produced.
17. Logistical support requirements.
18. Countermeasures susceptibility.
19. Stable platform requirements.
20. Magazine storage requirements.
21. Support to other systems.
22. Support required from other systems.
23. Effect of off-design conditions of operational environment.
24. Human Factors Requirements.

SECTION 8

Manpower Considerations

8.0 General

Manpower considerations resulting from the introduction of new and ever more complex systems, have an important effect on such systems effectiveness factors as reliability, operability, maintainability, and performance. Our modern tools of war must be designed from the start, taking into account the men who must operate and maintain them. An optimum system should make maximum use of man's capabilities and minimize the effects of his deficiencies. The human operator and maintainer can be considered as elements functioning together with machine elements as a total system.

Human factors studies on such subjects as human engineering and personnel and training requirements, should be conducted by specialists in these matters. Lack of expert consultation in the formulative stage will be apparent in the PTA. It is strongly advised that the human engineers and design engineers of the Principal Development Activity discuss personnel and training implications of all PTA's with the Bureau of Naval Personnel (BUPERS).[1] (See paragraph 8.6.) Some may require little or no input from BUPERS while others may have very important manpower implications.

8.1 Integration of Manpower Considerations into System Development

Effective systems require that manpower considerations be integral to system design in all stages of system development. It is recognized that in initial stages of system conceptualization, human engineering, personnel and training considerations are extremely fluid and subject to change. This does not negate the requirement for providing such information as *can* be developed, which will form the basis for more precise research to be carried out as the system design becomes more stable. Manpower considerations should be treated in proper perspective as vital trade-off elements throughout the total process of system development.

Additionally, manpower planning must be started at an early point in the development cycle because of the considerable lead time required for personnel planning and implementation. First there must be a determination of required manning in terms of numbers and skills. Later steps include the acquisition of personnel suited to the tasks, establishing training centers

[1] SECNAVINST 5430.67 assigns specific duties and responsibilities for administration of the Department of the Navy Research, Development, Test and Evaluation (RDT&E) program. See paragraphs 3.c.(1)(b), 3.c.(1)(e), 3.f.(3), 3.f.(5), and 3.f.(6).

and staffs, compiling training equipment, devices and aids, preparation of manuals, and, finally, doing the actual training. Another important reason for timely personnel planning is the extreme difficulty, and perhaps impossibility, of solving some personnel problems that are not identified until a development has reached a fairly advanced stage.

3.2 Human Factors in System Development

Human factors refers to a system of thinking and acting which is geared toward the optimization of the interaction of man and other system components. This may be accomplished through system design, organization, training, and the like. Human engineering is the sub-discipline of human factors which deals with the specific relationships of man to the hardware element, i.e., determination of functions, design, workspace layout, test points, maintainability, etc. Personnel and training research is the sub-discipline of human factors which deals specifically with examining the human requirements which a given system design, or alternative systems designs, will impose, and relating these requirements to the Navy's capability to meet them in terms of quantitative and qualitative criteria, training programs, etc. Personnel and training research, as well as human engineering for proposed weapon and support systems, must begin at the PTA stage of system development if maximum system performance and reliability is to be achieved.

The objectives of Human Factors Research in system development are as follows:

1. Optimize system performance by ensuring proper mix and match between man and the rest of the system.
2. Ensure the safety and survival of personnel performing in a systems framework.
3. Maximize human motivation and morale.

Requirements to achieve these objectives involve fitting the man to the job requirements as well as fitting the job to the man, and through research and testing determine whether the best "fit" has been obtained.

3.3 Nature of Human Engineering Studies in the PTA Stage

1. Analysis of systems functions that can or must be performed by man.
2. Trade-off studies involving allocation of systems functions between men and equipment.
3. Identify man-machine interfaces including operating and maintenance considerations.
4. Analysis of personnel aspects of equipment, procedures, facilities and environment including life support facilities.
5. Performance of overall system.
6. Causes of deficiencies in performance.

8.4 Purpose and Nature of Personnel and Training Research

Effectiveness of Naval Systems is predicated in part on the ability of the Navy to meet the ever-increasing personnel requirements demanded by those systems. Numbers available, qualitative distribution, and training resources are important constraints on system performance. The Navy has been, and is, faced with a qualitatively distributed manpower shortage. This shortage becomes more serious as the state of technological art improves, in that qualitative personnel *requirements* become greater, whereas qualitative personnel inputs remain relatively constant. Relatedly, the increasing complexity of systems strains an already existing training problem.

Basically, personnel and training research answers questions concerning the number of people required, the capabilities these people should possess, the time at which such personnel are needed, how they are obtained, from where, how they are organized, training objectives and the requirements for their fulfillment, and what the requirements are for testing and evaluation of such personnel. The goal of such an analysis is to match system personnel and training requirements with existing resources and the existing Naval personnel structure in terms of both capabilities and number of people required. Personnel and training research and system design are interacting factors. Changes in design or design concepts may affect personnel and training considerations, and conversely, constraints deriving from personnel and/or training considerations may require modifications in system design.

8.5 Objectives of Personnel Research at the PTA Stage

When alternative system approaches have been developed sufficiently to satisfy information requirements of a PTA, there should be enough information available to determine initial comparative personnel and training requirements considerations. The objectives of personnel research at this stage are:

1. To examine the system functions to be performed by man;
2. To assess the implications of these functions in terms of the number of personnel who would be required to fulfill the requirements, the capabilities that the personnel would have to possess, and the new training demands that would have to be met;
3. To relate these requirements to the Navy's ability to meet them;
4. To provide a concrete basis for estimating the human resources feasibility of proposed approaches and for using these estimates as sound trade-off criteria in relation to other system parameters;
5. To develop and record information as a basis for subsequent personnel and training research.

8.6 Coordination with Bureau of Naval Personnel

The Bureau of Naval Personnel (BUPERS) is sponsoring procedures to insure the integration of personnel acquisition and training in the planning, design and development phase as well as in the operation and maintenance phase of Naval systems. A close liaison is desirable in the PTA stage among the human engineers and the system engineers of the Principal Development Activity, and the research analysts of the New Developments Research Program of BUPERS.

8.7 Consultation with Naval Training Devices Center

In system developments which appear to involve development of new training devices, the Naval Training Devices Center should be consulted.

8.8 Content

The PTA provides the first opportunity to examine the manpower implications of given system approaches. Each approach, therefore, should be discussed in terms of all available human factors information. Procedures required to provide adequate reliability, operability, maintainability, and supportability which are related to manpower considerations, should be discussed.

Information developed as a result of objectives shown in paragraphs 8.3 and 8.5 should be included, as should any requirements for retraining or special training devices. In addition, a narrative summary of Human Factors RDT&E efforts which will be required during the development programs, the technical data requirements for support of these efforts, and description of studies already completed, both in exploratory development and in other related programs, should be included.

Typical trade-offs in personnel feasibility of alternative technical approaches involve such items as the following:

1. Technically desirable equipment features vs. availability of Navy personnel to operate and maintain the desired features.
2. Cost reduction features vs. availability of personnel with the required skill levels.
3. Time savings vs. personnel skill-level and availability requirements.
4. Use of automated features vs. increased demand for skilled manpower.
5. Simplicity of design vs. complexity of operator and maintenance tasks.
6. Claimed personnel reduction vs. experimental manning requirements.
7. Cost effectiveness considerations vs. morale and retention considerations.

Personnel and Training Considerations Check List

1. Qualitative, quantitative personnel requirements.
2. New training demands.
3. Personnel and training tradeoff criteria.
4. Human resource feasibility of alternative approaches.
5. Special training device requirements.
6. Human factors study requirements.
7. Operability factors.

BLANK PAGE

SECTION 9

Reliability and Maintainability

9.0 General

Reliability and maintainability, which are to a great extent interdependent, have become probably *the* greatest problem area in the fleet. To a large extent reliability and maintainability must be designed into equipment as it is very difficult to improve either to a marked extent, after a piece of equipment has been manufactured and installed. Since a piece of equipment is no more reliable than its least reliable part, very careful consideration of reliability and maintainability of each component must be considered very early in the evolutionary process. The Advanced Development stage is none too soon.

9.1 Contents

A PTA should contain all information available, either from experimental work or from similar types of equipment or simply conjecture, as to the reliability and maintainability implications of the proposed approaches. In addition, the PTA should discuss those steps which should be taken during the development of the various approaches to insure adequate reliability and maintainability. Special attention will be given to the reliability and maintainability provisions of the TSOR. Reliability and maintainability goals and requirements should be defined.

Although it is not expected that the PTA treatment of reliability and maintainability can be done in the same detail as in a TDP, the same general rules apply. The closer that it is possible to approach the TDP requirements, the easier it will be later should a TDP be required for the proposed development. Section 10, "Reliability and Maintainability Plan" from the TDP guide is reproduced in Appendix C as a reference.

Reliability and Maintainability Check List

(See "TDP Check List, Section 10, Reliability and Maintainability Plan" in Appendix C.)

1. Analysis of operational problem to establish reliability and maintainability goals or requirements.
2. Analysis of reliability of components and isolation of probable trouble spots.
3. Analysis of maintainability of components and determination of possible problem areas.
4. Estimation of reliability of components and overall system.
5. Estimation of mean time to repair of components and overall systems.
6. Discussion of use environment and its effect on reliability and maintainability.
7. Source of data used in estimation of reliability, and maintainability.
8. Data available along with source and data which should be obtained by further investigation.
9. Reliability and Maintainability assurance program to insure adequacy.

SECTION 10

Summary and Recommendation

10.0 General

This section is probably the most important in the entire PTA and its contents should be most carefully considered and weighed. Its contents should be given very wide exposure to all interested parties within the NMSE and other interested offices and bureaus to assure that all possible conflicts are addressed. Coordination with other services having an interest should be accomplished.

10.1 Contents

This section states which type of CNO response is sought (ADO–SOR) and under which RDT&E category the development should be pursued. For those projects meeting formal Contract Definition thresholds, a brief summary should be included of the steps already performed or planned for Concept Formulation (prerequisite for initiation of Engineering Development) given in DOD Directive 3200.9 Series. If other PTA's exist or are being produced which are related to this PTA, they should be described and the relationship explained with a recommendation concerning the several documents as a group. It should summarize salient points with respect to the performance capability, military usefulness, financial acceptability, technical feasibility and timeliness of the various systems and make a recommendation as to the preferred system from among the various alternative approaches. Estimated development funding required each year will be presented for the recommended technical approach. Overall program funding implications of the PTA should be given due consideration; in particular, where other work may have to be curtailed in order to proceed with the proposed development work. A preliminary schedule of major milestones in the development program should be shown in time sequence.

In cases where PTAs must consider a number of alternatives to the "Base Line" system, it may be desirable to generate an evaluation matrix which evaluates each system considered, against a series of evaluation criteria selected to achieve a qualitative/quantitative presentation of a cost effectiveness comparison. Such a sheet would be part of this summary.

Comment may also be included here of a type which the submitting Bureau might otherwise include in a transmittal letter to CNM or CNO.

This section may be marked by a hard divider or color coded for easy location and access.

10.2 Comment on Requirements

The investigations leading to the PTA may indicate desirable deviations in performance or other characteristics from that given in requirements documents. Any such deviation should be noted here. This applies to too stringent requirements, as well as cases where it is felt that more capability should or could be obtained in the development.

Summary and Recommendation Check List

1. Response sought from CNO(ADO–SOR).
2. Recommend RDT&E Category for development (Advanced Development, Engineering Development, etc.).
3. Related developments and PTA's description and relationship with group recommendation.
4. Summary of performance capability, military usefulness, financial acceptability, technical feasibility, and timeliness of various systems.
5. Funding totals by fiscal years for each.
6. Recommend preferred system.
7. Overall program funding implications of proposed approaches.
8. Explanation of evaluation criteria used for selection of recommended systems.
9. Evaluation matrix showing each system rated against evaluation criteria explained above. Quantitative and qualitative systems effectiveness should be shown.
10. Additional information of value in selecting optimum system.

SECTION 11

References

Reference all documents from which information contained in the PTA was derived as well as others which would contribute to a more complete understanding of the project under discussion.

SECTION 12

Appendix(es)

When the PTA responds to a requirement document, that requirement document should be included in the Appendix.

Any section which threatens to exceed a reasonable number of pages should be reorganized to enable some or all of the supporting data and discussions to be placed in an appendix. No PTA should exceed 30 pages up to and including Section 10, Summary.

Individual Procurement Feasibility Plans (in structure like an Advance Procurement Plan[1]) shall be prepared for each alternative approach, and included as Appendixes to the PTA. These plans should be sufficiently detailed to provide a basis for:

a. Evaluating the impact of the alternative on procurement.

b. Evaluating the economic differences among the alternatives.

[1] Guidelines for advance procurement planning are found in SECNAVINST 4200.18 Series and NAVMATINST 4200.32 Series.

APPENDIX A

OPNAVINST 3910.8 Series

Insert copy of OPNAV INST 3910.8 Series here in the guide for reference in preparing PTA's. It does *not* have to be included as part of each PTA.

APPENDIX B

SECTION 7

Block Diagram

7.0 General

The purpose of the block diagram is to illustrate in pictorial form, the relationship between major components of the system and the relationship of the system to other systems or functions. In order to be effective it is important to keep the diagram uncluttered of lengthy descriptions and most titling should be kept to one or two words.

Each major sub-system or function should be shown as a block with its appropriate title appearing within the block. To emphasize the importance or physical size of any function, a larger block than others should be used. Functions which interface with each other should be connected by lines.

Interfaces may take on a number of forms which may be physical, such as electrical or mechanical interfaces, or non-physical, such as an information flow. A single line should be used to connect each block which is related to another block for each type of interface. Connecting lines should be coded on a legend on the drawing and a label placed above the line to describe the characteristic of that interface. (Coding should take the form of solid, dotted or dot-dash lines for each type of interface.)

Arrows should be placed on the connecting lines to show the direction of energy flow for an electrical or mechanical interface or the direction of data flow for an informational interface. The point of the arrow should terminate on a block and arrows on both ends of an interface line signify a two way exchange between functional blocks.

The block diagram should be organized so that one can easily find the input(s) to the system and follow the flow through the major functions blocks to the resulting output.

To achieve this facility, the block diagram should be constructed so that the major line of internal flow runs from the top to the bottom of the page or from left to right. One should avoid laying out a block diagram which requires looping back and forth or up and down to follow the flow through the system. This means that the number of blocks should generally not exceed 6–8.

In designing the layout of the block diagram, it may be that 6–8 blocks do not adequately describe the system in the level of detail desired by the PDA. This can be resolved by provided subsidiary block diagrams which are drawn on a functional level which is part of the overall system function. For example, the overall block diagram can have each of its component blocks broken down with a sub-system block diagram for each block. This sub-system block diagram should be constructed following the same rules as the overall block diagram. This process may be repeated as often as desired but it is suggested that a maximum of two levels should be employed even for the most complex system.

At times, it may be possible to eliminate the need for a second level of block diagram by increasing the number of blocks on the overall block diagram to 10 or 12. This practice is perferred since it results in a single page drawing of the system. Foldout pages can be employed with a maximum size of 16 x 10½ (a double page).

Each block on the overall block diagram should be numbered for reference. Blocks on sub-system block diagrams should be numbered with the number of the block of the overall block diagram followed by decimal digits. For example, the overall block diagram may contain a block labeled "Data Link" and numbered 1.0. If a lower functional level drawing is constructed further breaking down "Data Link" each block should be numbered 1.1, 1.2, 1.3, etc., in the sub-system block diagram.

7.1 Overall Block Diagram

The overall block diagram should be constructed in such a manner that a reviewer of the TDP may quickly ascertain the relationship of the system to other systems and the major units of the system under development. In addition to following the general guidelines described in SECTION 7.0, the major flow through the system should be emphasized with a heavy connecting line and arrows between blocks existing in the major flow path.

All associated sub-systems should be illustrated as a single block for each associated subsystem. Appropriate interface lines should be shown. Figure 7–1 illustrates a Typical Overall Block Diagram.

Included in this section should be a general description of the system operation which follows the flow shown on the overall block diagram. This narrative should be quite brief and is employed to provide those reviewers who are not technically oriented with a general picture of the role of this system in relation to overall DOD objectives and programs. This description should refer to specific characteristics of the SOR or ADO.

The blocks appearing in this diagram need not represent physically realizable units or systems but may represent functions which involve both equipments and human actions. This is particularly applicable in non-automated systems where human decision is an integral part of the system operation. The general description of the system operation should include reference to the man-machine interface and critical points of operator information requirements, information flow, decision points, stored information, operator intervention and action alternatives. The overall block diagram should distinguish between equipment operation tasks by phase as given in the general description of the system. An example is a command and control system which may be fully automated in the data acquisition and reaction control functions but may depend upon human intervention to complete the overall action between acquisition and reaction.

7.2 Detailed Block Diagram

This diagram, as stated in SECTION 7.0, is used when further detailing of the system's description is required. There may be detailed block diagrams for some or all of the blocks of the overall block diagram. The degree of detail is a decision to be made by the writer of the TDP and will vary from system to system. General guidelines cannot be established to aid in deciding upon the

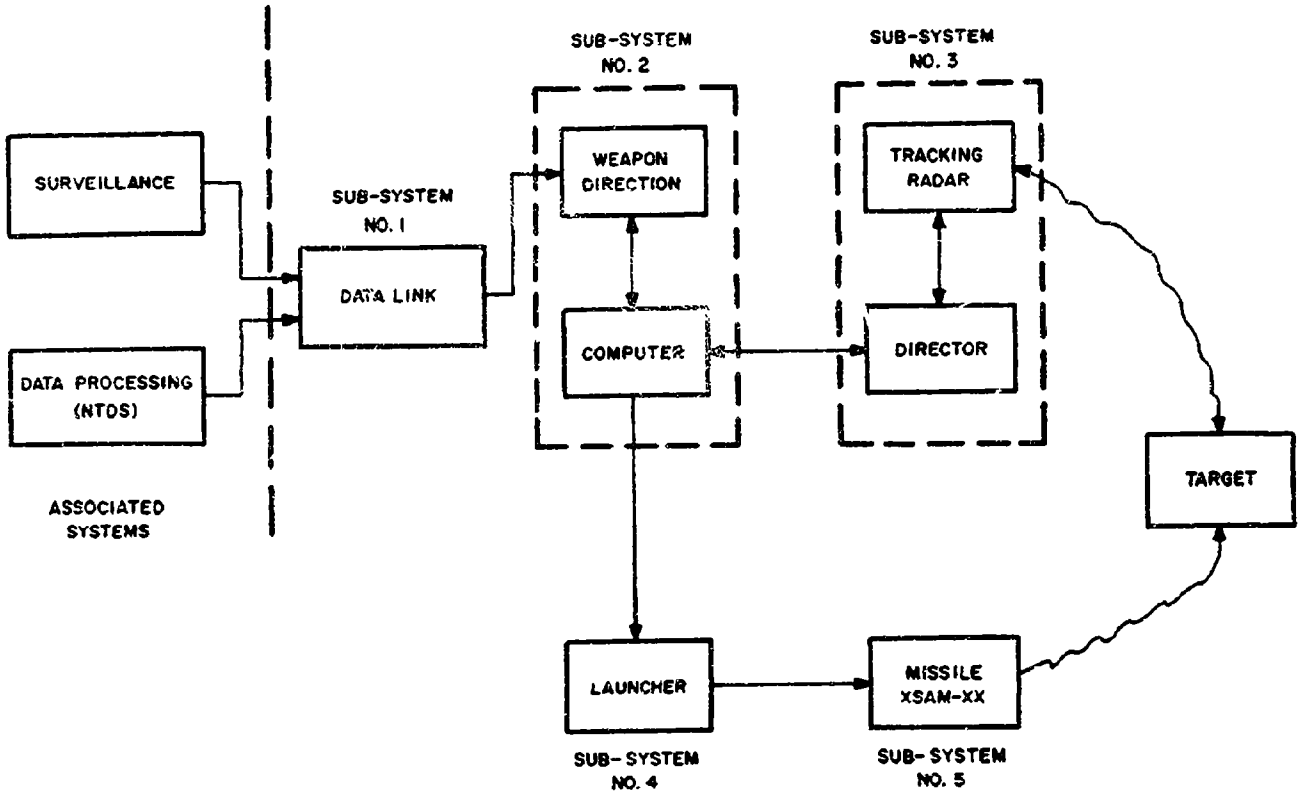

Figure 7-1. Typical Overall Block Diagram XSAM Weapon System.

detail required. However, the detail illustrated in the diagram should relate to the degree of detail employed in SECTION 8, Sub-System Characteristics. That is, for every block appearing in the block diagram, a portion of SECTION 8 shall appear where that block is described.

No descriptive material should be included in this section relating to the detailed block diagram since it will appear in SECTION 8. Figure 7-2 illustrates a Typical Detailed Block Diagram.

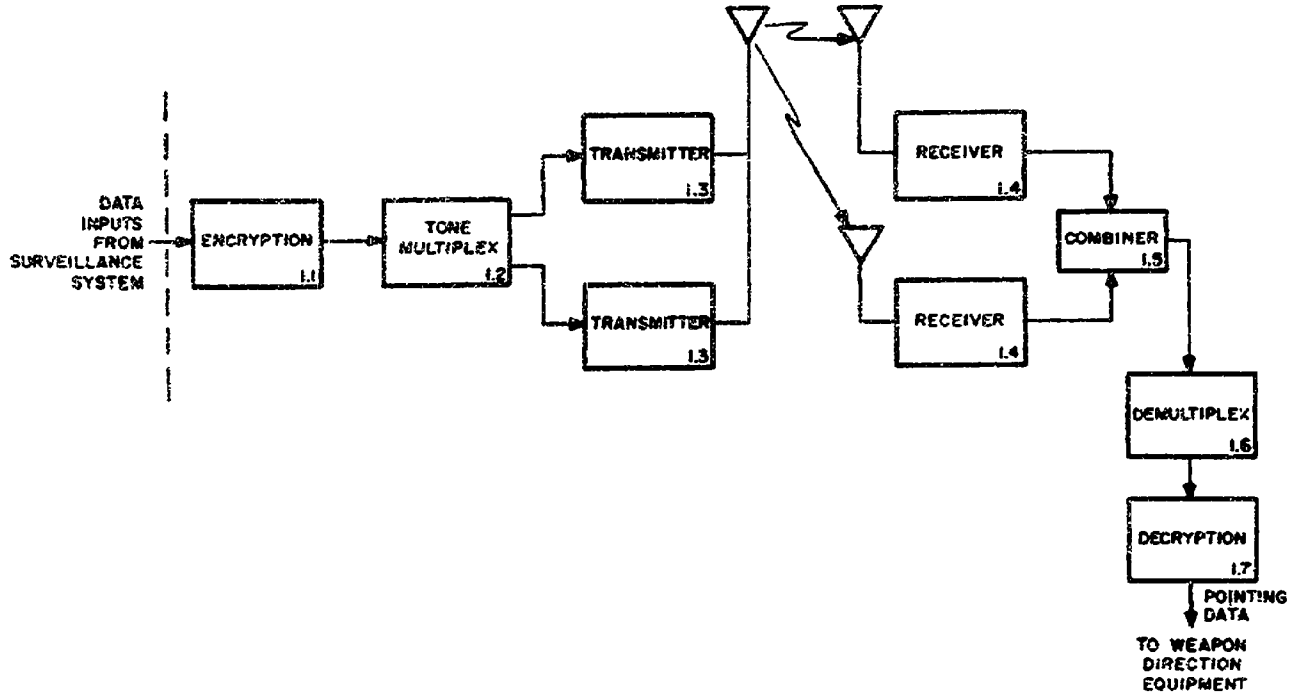

Figure 7-2. Typical Detailed Block Diagram Data Link Sub-system.

TDP Check List

SECTION 7

Block Diagram

1. Can the system be illustrated using 6–8 blocks in overall block diagram?
2. If answer to (1) is "no", have detailed block diagrams been drawn?
3. Have all related blocks been connected by interface lines?
4. Does each block contain its title?
5. Is each block numbered?
   a) on overall block diagram 1.0, 2.0, etc.
   b) on detailed block diagram 1.1, 1.2, etc.
6. Is each type of interface coded and does a legend for the code appear on the block diagram?
7. Are all interface lines labeled with arrows showing direction of flow?
8. Does the major flow through the system exist from top to bottom or left to right?
9. If detailed block diagrams are drawn, can system be illustrated with an overall block diagram of 10–12 blocks?
10. Has the major flow through the overall block diagram been emphasized with heavy lines?
11. Has a brief description of the overall block diagram been included?
12. Have all associated sub-systems and their interfaces with the development system been illustrated?
13. Has each block diagram, overall and detailed, been labeled and numbered?
14. Does the labeling of the blocks in SECTION 7 correlate with SECTIONS 8 and 9?
15. Has the Block Diagram been carefully compared with the Work Breakdown Structure to assure that all key elements of project hardware have been identified?

APPENDIX C

SECTION 10

Reliability and Maintainability Plan

10.0 General

The purpose of this section is to outline a plan for assuring that the system being developed is capable of meeting stated reliability and maintainability objectives. Reliability and maintainability are two major factors contributing to System Effectiveness. (Table 10-1 illustrates the elements in an overall plan.) These objectives should be defined quantitatively herein and should be based upon the Operational Readiness goals as stated in the SOR. The objectives should be examined carefully for feasibility of achievement.

This section should carry as much emphasis as any other section in the TDP as reliability and maintainability are, in fact, performance parameters of the system. Since every element of the system, both man and machine, contributes to the overall reliability and maintainability, a program of definition, design, prediction, monitoring, and evaluation must be included to minimize any possibility of producing a technically acceptable but operationally unacceptable system.

If the TDP is in response to an ADO, the reliability and maintainability objectives do not need to be defined if the system being developed in response to the ADO is not to be a prototype model. Nevertheless, a plan should be described to provide some degree of reliability assurance during the research phase. This plan need not be definitive in the quantitative sense but should describe a program which makes both reliability and maintainability factors to be considered in the experimental development program. A minimum requirement is a clear statement of the reliability and maintainability philosophies to be followed.

TABLE 10-1. Elements in Reliability and Maintainability Plan

Reliability

Feasibility Analysis for Parameter Values in SOR/ADO
Mission Profile
Reliability Goals
Reliability Modeling
Reliability Apportionment
Reliability Predictions
Reliability Measurements
Component Part Reliability
    Environmental Effects
    Storage Considerations

Maintainability

Feasibility Analysis for Parameter Values in SOR/ADO
Maintainability Goals
Maintainability Modeling
Allocation of Repair Responsibilities
Predictions
Measurements
Repairability Status
Repair Techniques

NOTE: These elements apply to man segments of the system as well as to machine segments.

Therefore, this section should define plans for both reliability and maintainability assurance. Each plan should indicate the steps to be followed, the general techniques or specifications to be applied, the major milestones in the program and the responsible parties charged with establishment of goals and monitoring of progress toward these goals. The plan should include a reporting method to be imposed upon contractors in support of the plan. The quantitative objectives for reliability and maintainability for each sub-system should be stated as well as the overall system performance in all of its operating modes. It is recognized that quantitative objectives may not be available for some systems under advanced development, for those systems assumed quantitative objectives should be provided.

The overall availability of the final system is a function of its quantitative reliability expressed as Mean Time Between Failure (MTBF), and its quantitative maintainability expressed as Mean Time To Repair (MTTR). Because of this relationship and because of the ultimate interest of the operating forces in System availability, the PDA should define plans for reliability and maintainability assurance which complement each other in such a manner as to insure the achievement of the overall availability objective.

10.1 Reliability Assurance

10.1.1 Reliability Plan

Figure 10–1 illustrates the major phases of a reliability program. In the detailed reliability plan the Project Manager must describe the procedures and techniques to be employed during each phase of the reliability program.

Furthermore, one must make certain decisions which will be reflected in the TDP in regard to which phases of the reliability program may be downgraded and which may be emphasized in the particular reliability plan being applied to the system.

Prior to establishment of a detailed reliability plan, the PDA must answer the following question: "Is reliability prediction an adequate technique for assurance of reliability or will a reliability demonstration be required?" The answer to this question will establish the overall philosophy of the reliability plan and a number of important factors should be weighed when considering the question.

To evaluate these factors, it is best to examine a typical reliability plan as illustrated in Figure 10–2. The figure illustrates major events occurring in

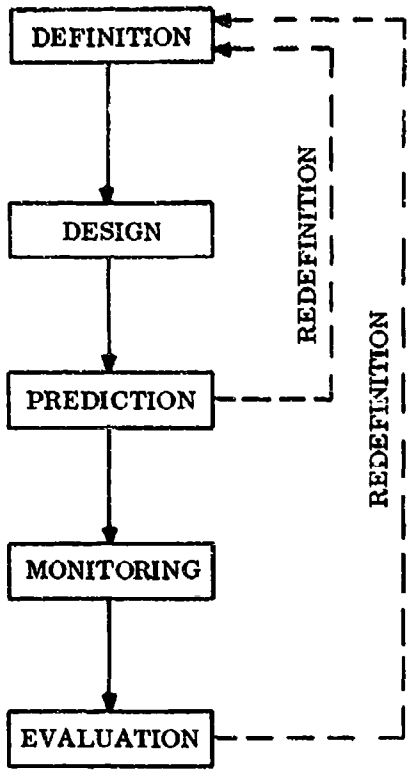

Figure 10-1. Phases of a Typical Reliability Program.

the course of the plan and the following sections explain the events in more detail.

Figure 10-2 presents an outline for a plan which can act as a basis for most reliability plans. The degree of emphasis placed upon any event must be evaluated in light of each program by the PDA. The events, however, are the same and fit within the overall framework of any reliability program; i.e., definition, design, prediction, monitoring and evaluation.

10.1.2 Establishment of Overall Reliability Goals

It is the responsibility of the Project Engineer to determine the reliability goals for the various operating modes of the system in response to the Availability and Operational Readiness goals established in the SOR. (A useful reference guide in assisting Project Engineers in this task is NAVWEPS 00-65-502 Reliability Handbook, 1 June 1964. This document describes the various factors to be considered and the mathematical techniques to be employed in establishing the overall MTBF for the system.)

10.1.3 Determination of System Configuration

In response to the technical and operational requirements of the SOR, a system configuration is determined. This configuration is illustrated in block dia-

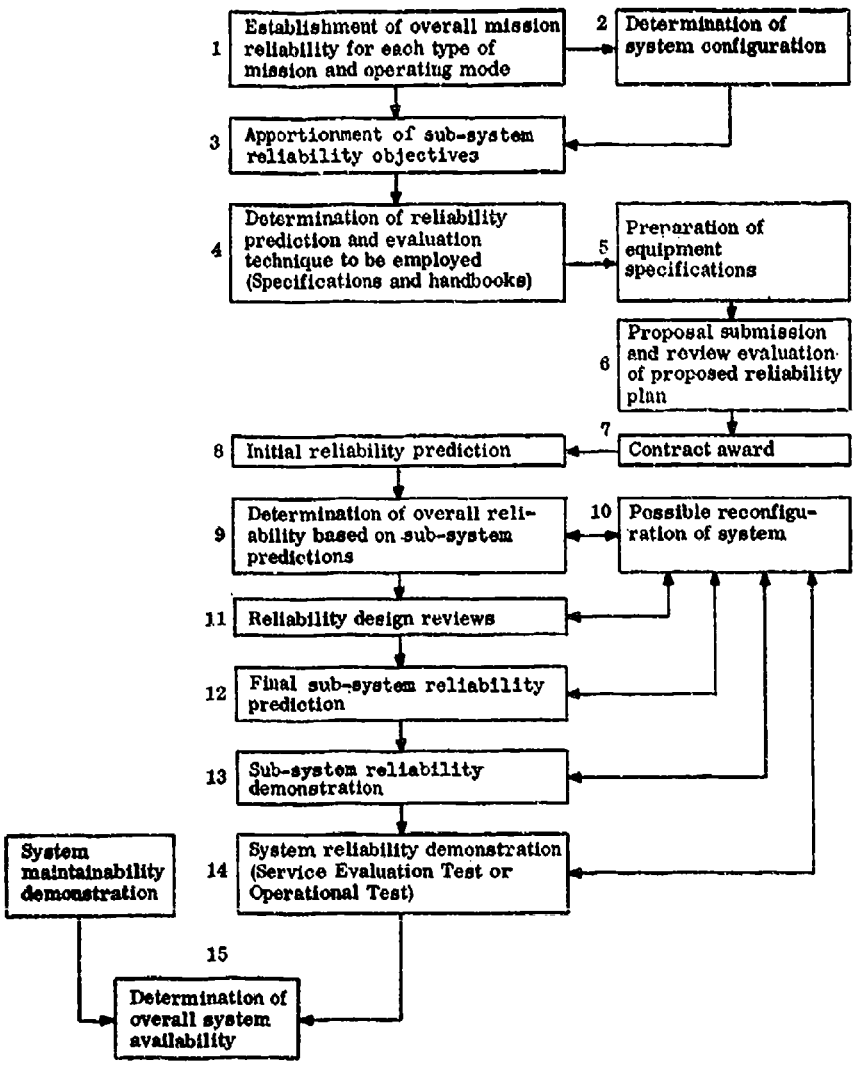

Figure 10-2. Events in a Reliability Plan.

gram form in SECTION 7 of the TDP. From this overall block diagram, the Project Engineer will devise functional or model diagrams which will illustrate the system in its various operating modes.

10.1.4 Apportionment of Sub-System Reliability Objectives

The overall system reliability goals are applied to the various functional models of the system and sub-system and unit MTBF's or other measures (i.e., cycles, etc.) of success are arrived at by the Project Engineer. These objectives are determined by considering relative complexity of each unit or sub-

system and the state-of-the-art for that particular type of device. At this time the Project Engineer may consider the use of redundancy either in circuits, units or sub-systems if his experience indicates that state-of-the-art limitations dictate a need for such redundancy in order to achieve the system reliability goal.

Figure 10–3 illustrates a technique of reliability apportionment. As an example of the application of this technique, assume that a system consists of sub-systems A, B and C which function as shown in Figure 10–3 and that the overall, P_s, mission reliability for the system for a 10-hour mission is 0.95. (The mission duration and reliability goal are established in the SOR.)

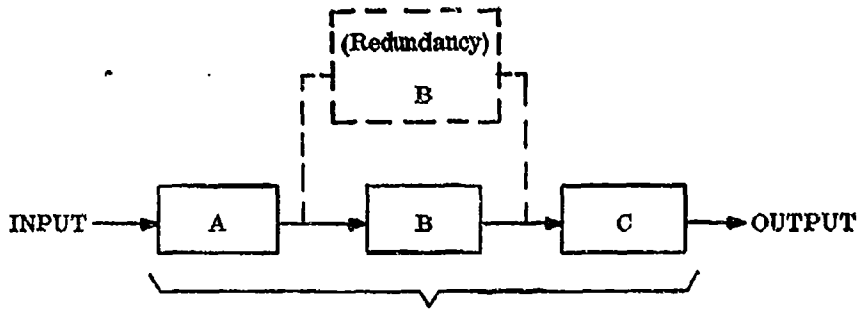

$P_S = .95$

	MTBF Objective for a 10-Hour Mission
$P_A = 0.99$	1000 hours
$P_B = 0.98$	500 hours
$P_C = ?$ (.979)*	476 hours
$P_S = .95$	196 hours

* P_C is the quantity to be determined

Figure 10–3. Apportionment of Reliability Goals.

This P_S is the product of the probability of survival of each sub-system. If P_A is the probability of survival objective for system A, and P_B is the probability of survival for system B, etc., then P_S can be expressed as

$$P_S = P_A \times P_B \times P_C$$

Based upon experience and state-of-the-art, assume that P_A can be set at 0.99 and P_B at 0.98. The determination of the reliability goal for system C, P_C, can be found from

$$P_C = \frac{P_S}{P_A \times P_B}$$

Using the figures from above

$$P_C = \frac{P_S}{P_A \times P_B} = \frac{.95}{.99 \times .98} = \frac{.95}{.97} = .979$$

Now the MTBF for each sub-system is related to the probability of survival and the mission duration by the relationship*

$$P_S = e^{-\lambda t},\ \lambda = -\frac{\ln P_S}{t} \qquad \text{(See Appendix D for Reliability Nomograph)}$$

where P_S = probability of survival
e = base of natural logarithms, 2.718
$\lambda = \frac{1}{\text{MTBF in hours}}$
t = mission duration in hours

By substituting the allotted P_A and P_B, and the computed P_C in this equation, the MTBF goal for each sub-system may be arrived at, yielding

MTBF_A = 1,000 hours
MTBF_B = 500 hours
MTBF_C = 470 hours

These figures will be used as a design parameter in the specification of each sub-system.

If, as the development progresses, the expected P_S of system B is determined to be 0.97 rather than 0.98, a reapportionment of reliability objectives will take place.

Either P_A or P_C or both could be increased to accommodate the deficiency in the performance of system B or as an additional alternative, system B can be made redundant as illustrated in Figure 10-3. The choice of alternative must be made considering the relative cost of each.

If, for example, the choice is made to increase the reliability objective for system C, the following apportionment will result:

Probability of Survival	MTBF Objective for a 10-Hour Mission
P_B=.97 (revised)	333 hours
P_A=.99 (unchanged)	1,000 hours
P_C=? (.989) revised	910 hours
P_S=.95 (unchanged)	196 hours

*An exponential relationship is assumed to apply. Specific cases may require other distributions.

10.1.5 Determination of Applicable Reliability Prediction and Evaluation Techniques

It is at this point that the PDP must decide the answer to the question previously posed; "Is reliability prediction without evaluation adequate?"

A program of reliability demonstration of necessity will involve increased program cost and possibly a lengthy testing period. To measure the MTBF of a sub-system or unit with high confidence, the sub-system must be operated for long periods with enough failures occurring to provide a large enough statistical sample to determine the mean operating time.[1] As an alternative to this, many sub-systems or units may be built and operated concurrently, thus cutting down the overall time to collect reliability data. But the latter alternative involves the increased cost of construction of additional equipments.

If reliability prediction is felt to be adequate, then an extensive testing period or the time and cost of constructing additional equipments are avoided. However, an uncertainty will exist concerning the ability of the final system to meet the required reliability goals.

Depending upon the value of the predicted MTBF relative to the required MTBF and the confidence in the basic reliability data and techniques employed in the prediction, the level of uncertainty will vary. Certainly, a predicted mean life exceeding the requirement by 50 percent or greater would influence the PDA towards reducing the reliability testing if one is considering such a course of action. On the other hand, a prediction close to the requirement may prove influential towards the opposite decision.

This then is the decision to be made by the PDA. One must assess the cost/time vs. confidence level tradeoff to determine the type of reliability plan to be implemented.

To make this decision the Project Engineer should provide the PDA with the basic data concerning number of units required for a reliability demonstration, expected test periods, and anticipated confidence levels.

If the PDA decides that reliability prediction is adequate for his needs, he should discuss the factors influencing this judgment and his assessment of their cost effectiveness in this section of the TDP. Any other factors, such as urgency in obtaining equipment, which might influence such a decision should be explained as well.

Once this decision on basic philosophy has been made, the PDA should indicate which documents will be invoked in implementing the reliability plan. For example, he must decide if he will require contractors to provide predictions according to MIL-STD-756 (The DOD Standard), or if he will permit contractors to submit their predictions based upon other military or commercial standards. The method of reporting of contractor predictions and evaluations must be established and a failure reporting program should be imposed upon

[1] As an indication of the amount of testing involved, let us assume that one wishes to measure the MTBF of a system with a confidence level of 90%. If tests are run until 30 failures occur and if the measured MTBF after 30 failures is 100 hours, one can be 90% confident that the actual MTBF is between 76 and 130 hours. For higher levels of confidence or to decrease the expected range of the mean, more failures must be experienced hence longer testing periods or increased equipment quantities are required.

the contractor which requires him to report and analyze the cause of all failures occurring during equipment development. Rather than establishing a reliability plan for the contractor, the PDA may elect to require the contractor to submit his proposed reliability plan to the PDA for approval. The TDP should indicate which course of action will be chosen. If this course of action is chosen a schedule for submission, review and approval of the contractor's plan should be established.

Figure 10-4 is a chart summarizing most of the military specifications and standards available to the PDA as supporting documentation. By familiarizing himself with the documents defining reliability program requirements and those defining reliability techniques to be employed in design, development and production, the PDA should be able to invoke an existing specification which will closely meet his particular program needs. MIL-STD-785 Reliability-General Specification should be reviewed for applicability to most programs.

10.1.6 Preparation of Equipment Specification

After establishing the general philosophy of the reliability plan and determining the applicable documents, a section invoking these documents and procedures is included in the equipment specification.

The required MTBF should be included in the section of the specification defining performance parameters but the methods to be employed in prediction and evaluation as well as any special requirements on contractor monitoring, review and reporting should be included under quality assurance provisions. The specification also should detail the environmental, reliability and other tests which will be performed on the equipment. The Design Specs listed in Figure 10-4 include as a rule environmental requirements which should be considered for the particular type of equipment under consideration. Careful consideration should be given to the expected shipping, storage and operating environment of the equipment so that the environmental tests which are invoked are compatible with the conditions of the actual environment.

A method of failure reporting and analysis should be invoked within the specification to assure the PDA that the contractor is continually applying a program of quality assurance to his design.

10.1.7 Proposal Submission and Review

The next step in any reliability plan is the review of contractor proposals. As an aid in evaluating the contractor's submission of his reliability programs, the PDA should refer to Figure 3-3, Pages 3-11 and 3-12 of NAVWEPS 00-65-502 Reliability Handbook which offers a convenient checklist.

This chart indicates the major points of interest to the Project Engineer when evaluating proposals and determining the responsiveness of proposals.

10.1.8 Contract Award

Included in the contractual documentation should appear the requirement to follow a reliability plan as agreed upon during contract negotiation. The requirement may appear as an applicable document or reliability plan in the specification or it may appear as a separate contract item where deliverable reports are required.

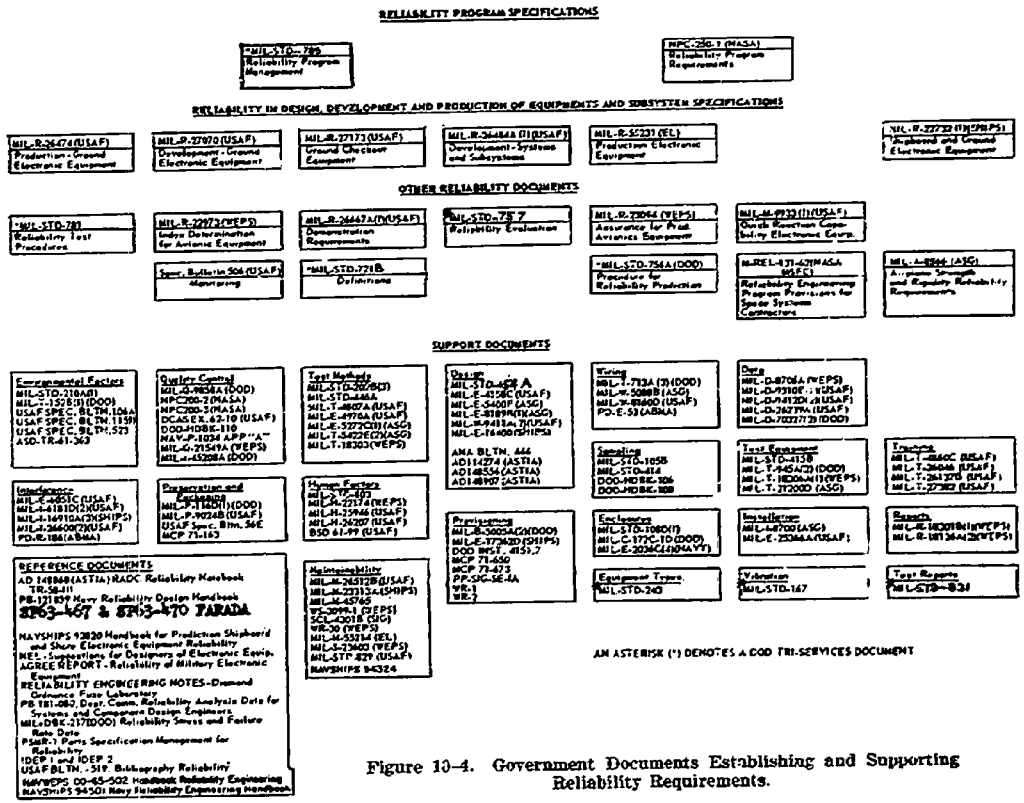

Figure 10-4. Government Documents Establishing and Supporting Reliability Requirements.

10.1.9 Initial Reliability Prediction

Each contractor shall be required to submit for PDA approval, an initial estimate of sub-system reliability immediately upon his completion of the paper design of his equipment. The submission shall be in sufficient detail as to permit the PDA to evaluate the validity of his prediction technique, its application and its results. MIL-STD-756, should be reviewed by the PDA for applicability in this phase of the program.

10.1.10 System Reliability Prediction

After evaluating each contractor's submission, the PDA will use these predictions to estimate the reliability of the system in its various operating modes. Comparisons will be made between the predicted reliability in each mode and the reliability goals which were described in Section 10.1.1 herein.

10.1.11 Possible Reconfiguration of System

As a result of the comparison between predicted system reliability and the reliability goals, it may be necessary to consider a reconfiguration of the system. If the goal exceeds the prediction, one may consider the use of redundancy of units or sub-systems or a redesign of equipment as means toward increasing the overall predicted reliability. Another possible alternative is a review of the goals to reduce them to meet the prediction. This alternative should be considered in light of the potential increased cost in providing redundancy or improving the equipment design to enable the system to meet its initial reliability objective.

The prediction should always exceed the goal. If the prediction exceeds the goal by a margin of over 2 to 1, a potential over-design situation exists. This conclusion is dependent upon the confidence level placed in the prediction. This confidence level must be based upon actual prior measurements on other projects which employed the same basic failure rate data and prediction techniques. Such a review of previous results should provide the Project Manager with an indication of the confidence he may place in the prediction. For example, a compilation of actual vs predicted MTBF's may indicate that the prediction is generally about 75% of the measured MTBF. If this factor, applied to the prediction, still results in a weighted prediction substantially exceeding the goal, the basic design should be reviewed to determine if any modification can be made which, although it reduces the predicted MTBF, may also reduce the cost. Do not reduce the MTBF by design changes unless cost or other benefits are evident. At this point a cost/effectiveness study should be performed to provide the basic tradeoff data upon which such a decision may be made.

The review and updating of system configuration should be a process which is employed after completing significant events in any phase of a project. It should occur during a reliability program whenever predictions or measurements result in overall system performance which is not in accord with system reliability goals.

10.1.12 Reliability Design Reviews

As the design of the equipment progresses, each contractor should be required to perform at least one critical reliability design review before freezing

the design. Any changes in equipment configuration or major component complement should be appraised and a new reliability prediction should be produced The critical items of appraisal to be considered during such a review are described in Paragraph 3.2.2.6 of MIL-R-22732B (SHIPS).

As a result of this review, it may be necessary to reconsider the system configuration as described in Section 10.1.10 herein. The PDA should carefully monitor and evaluate the predictions and failure reports from all contractors. Since these predictions will, in general, not be available concurrently, the PDA should carefully weigh the impact of each contractor's prediction upon the reliability goals established by specification for each other contractor.

10.1.13 Final Sub-System Reliability Prediction

When all design changes have been incorporated into the equipment and a final configuration exists, the contractor should perform a final reliability prediction. This prediction should be appraised for its effect upon overall system reliability, as are all predictions.

If required, the system configuration should be reviewed for possible modification.

10.1.14 Sub-System Reliability Demonstration

When a program of reliability demonstration is to be undertaken, both under development and/or production contracts, the resulting data should be evaluated in light of the reliability objectives.

At this point confidence levels in the measured MTBF can be quantitatively determined. (For details of this technique see NAVWEPS 00-65-502 Reliability Handbook-Appendix 3.)

A final computation may now be performed, using actual data on sub-system reliability, to predict system reliability. Again, a review of system configuration based upon a comparison of goals and extrapolated measurements should be made.

As each succeeding prediction and appraisal is performed during the reliability program, the impact of each of these upon system configuration should diminish. It is to be expected that major changes in configuration may occur as a result of the earlier predictions but the evaluation of the effect of the reliability demonstration on overall reliability should result in little if any alteration to the system.

A number of techniques of reliability demonstration are available for use during this phase of the program. MIL-STD-781, "Test Levels and Accept/Reject Criteria for Reliability of Non-Expendable Electronic Equipment," outlines a series of environmental test levels which can be employed for the purpose of reliability demonstration NAVWEPS 00-65-502, "Reliability Testing," Sections 6 and 7, provide useful data for the design of tests for reliability demonstration.

10.1.15 System Reliability Demonstration

This phase measures the validity of all assumptions, predictions and analysis techniques previously employed.

In the case of a developmental equipment, tests and evaluations, as described in SECTION 12 of the TDP, are the vehicles through which system reliability is

demonstrated. In the case of production equipments, the final in-service operation provides the means for measuring system reliability. Regardless of how closely conditions are simulated, and performance tests are planned, it is operation under actual service conditions which provides the technique for full evaluation. It is here that the maintenance procedures and operating procedures are employed to stress the equipment with factors not existing in a laboratory or factory.

Failure reports and equipment logs should be prepared in accordance with MIL-E-16400E, Amendment 4, Paragraph 3.1.8, General Specification, Electronic Equipment, Naval Ship and Shore.

These reports provide a means for measuring system reliability with high confidence and assist in the determination of the "true" MTBF.

10.1.16 Determination of Overall System Reliability

After the "true" reliability and "true" maintainability of the system have been determined as described in part in Section 10.1.15, the system availablity may be determined from the following formula:

$$\text{Availability} = \frac{\text{MTBF}}{\text{MTBF} + \text{MTTR}} \times 100\%$$

(See Appendix C for Availability Nomograph)

where MTBF (Mean-Time Between Failures) is the mean operating time and MTTR (Mean-Time to Repair) is the mean down time, for each operational mode of the system.

This is the final step in the reliability plan.

10.2 Maintainability Assurance

10.2.1 Maintainability Plan

The Events in a Maintainability Plan outlined in Figure 10-5 can be used as a basis for most maintainability plans. As in the Reliability Plan, the PDA must describe the procedures and techniques that will be employed during each phase of the project and the degree of emphasis to be placed on each event. The major events of a typical maintainability plan are described in the following paragraphs to guide the PDA in making maintainability decisions which will be reflected in the TDP.

10.2.2 Establishment of Maintainability Goals

It is the responsibility of the Project Engineer to determine the system quantitative maintainability goal within the framework of the operational and planning information outlined in the SOR. A suitable reference guide for this task is NAVSHIPS 94324, "Maintainability Design Criteria Handbook for Designers of Shipboard Electronic Equipment." This document describes the various factors affecting maintainability and the mathematical techniques to be employed in establishing system MTTR values.

10.2.3 Maintenance Philosophy

In addition to providing essential data for the Supportability Plan, and the Personnel and Training Plan, the maintenance philosophy provides useful information for predicting maximum and minimum requirements for MTTR

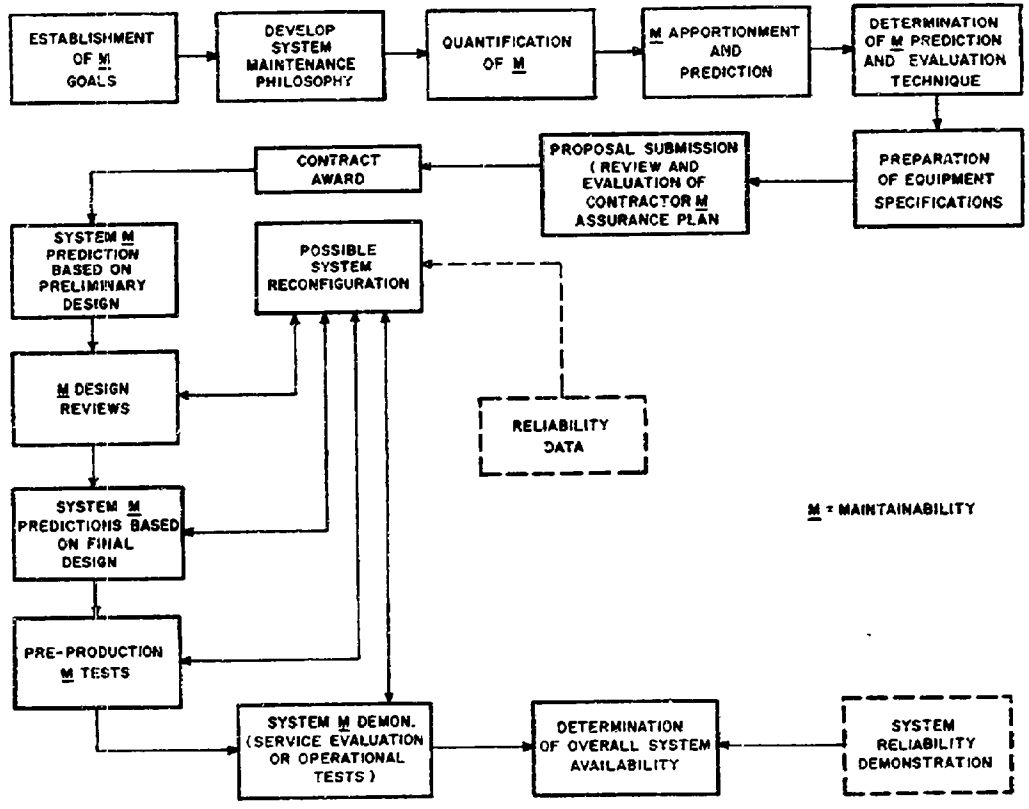

Figure 10-5. Events in a Maintainability Plan.

and for the allocation of the overall system maintainability measures to various functional levels. The responsibility for developing the system maintenance philosophy is assigned to the Project Engineer. Useful information on the relationship of elements in the maintenance cycle to maintainability design can be found in NAVSHIPS 94324.

10.2.4 Qualification of Maintainability

Development of numerical measures of maintainability for inclusion in the TDP can be accomplished by predictive methods based on information provided by the system maintenance philosophy. Typical prediction methods and expected ranges of MTTR for various repair methods can be found in the maintainability evaluation procedures of MIL-M-23313A(SHIPS) or MIL-S-23603.

Since system availability (A) is a function of both MTBF and MTTR,

$$\left(A=\frac{MTBF}{MTBF+MTTR}\right),$$

maximum and minimum values for MTTR should be stated whenever fixed values are not specified. This will afford some degree of tradeoff between reliability and maintainability design for a specified value of A. Information regarding MTBF-MTTR tradeoff possibilities is contained in NAVSHIPS 94324.

10.2.5 Maintainability Apportionment

The allocation overall system measure of maintainability to lower order elements of the system can be accomplished by prediction methods described in MIL-M-23313(SHIPS), or MIL-S-23603. General information requirements and the mathematical techniques for determining maintenance task times related to each functional level of the system are provided in this document.

10.2.6 Determination of Maintainability Prediction and Evaluation Technique

At this point, factors which will influence the PDA decisions regarding reliability prediction and evaluation will also affect decisions concerning maintainability prediction and evaluation. The alternate approaches to maintainability assurance which will be possible once the basic philosophy decision has been made, parallel those described (see Section 10.1.4) for implementing the reliability plan. Some of the maintainability documents which may be invoked are listed in Figure 10-4.

10.2.7 Preparation of Equipment Specifications

All maintainability documents and procedures to be invoked must be included in the equipment specification. In defining performance parameters in the specification, the required measures of MTTR should be included and the quality assurance provisions should include prediction, evaluation, monitoring, review and reporting methods and requirements. Maintainability specifications must give due consideration to human factors which affect system performance. Contractors should be cautioned to incorporate human resource constraints in their design for maintainability. The specifications for maintainability requirements contained in MIL-M-23313A(SHIPS) are typical.

10.2.8 Proposal Submission and Review

The maintainability program submitted by the contractor should be reviewed jointly by the Project Manager and the Project Engineer to determine responsiveness to specifications.

10.2.9 Contract Award

Maintainability requirements should be included in the contractual documentation in the manner described for reliability requirements (see Section 10.1.7).

10.2.10 System Maintainability Predictions and Design Reviews

Initial maintainability predictions submitted by the contractor(s) during the design planning stage of the system research and development phase are used by the PDA for early estimates of overall system maintainability. Methods and schedules of evaluation to be used during the early design stages are usually left to the contractor providing compliance with specifications in the final design is assured. Maintainability design reviews, whether independent or integrated with reviews for other purposes, provide the means for implementing maintainability design control necessary to assure (1) meeting the specific human factors criteria for the equipment or system in compliance with contract requirements, and (2) changes affecting maintainability design are handled expeditiously. The final maintainability prediction(s) by contractor(s) should be analyzed and the overall system maintainability prediction to determine if the specified requirements will be met. System reconfiguration that might occur will require a continuing effort of maintainability throughout the preproduction and service evaluation test stages. Techniques and conformance/nonconformance criteria are provided in maintainability specifications listed in Figure 10-4. MIL-M-23313A (SHIPS) is typical of those imposed throughout system development and production programs.

10.2.11 Scheduled Maintenance Considerations

This section has appropriately emphasized the unscheduled aspects of maintenance. Since all maintenance requirements must be considered in the Maintainability Plan, the Project Engineer is enjoined to include in his considerations, scheduled maintenance aspects such as:

(1) Cycling or turn-around time requirements.
(2) Provisions for concurrent servicing of the various subsystems.
(3) System reaction time requirements.
(4) Troubleshooting and fault diagnostic methods desired.
(5) The system maintenance concept and what it should include (levels of maintenance and associated maintenance tasks and functions).
(6) Periodic (scheduled) maintenance requirements, including calendar time or operational limitations governing inspection and rework of the system.
(7) Maintenance manhour requirements or objectives per operating hour, per flight hour, or other measure of time or events.
(8) Maintenance and operating factors for personnel requirements determinations
(9) The required or desired degree of system readiness (availability).

(10) Times required for fault identification, isolation, correction and repair verification.

(11) Maintainability verification schedules and methods used during development effort.

(12) Types of missions, mission duration and frequency, or modes of operation, duration and frequency.

10.2.12 System Maintainability Demonstration

The validity of all maintainability assumptions, predictions, and analysis techniques for developmental equipment is measured during the planned tests and evaluations of SECTION 12. Data devised from the system maintainability and reliability demonstrations are used to determine the overall system availability as described in Section 10.1.15.

TDP Check List

SECTION 10

Reliability and Maintainability Plan

1. Is the TDP in response to an ADO?
2. If "yes", does the TDP impose some requirement for reliability assurance during research?
3. If the TDP is in response to an SOR, has a detailed reliability plan been described?
4. Has the question of reliability prediction vs. reliability demonstration been considered?
5. Have reliability goals been established for each mode of system operation using the SOR goals as a basis?
6. Have reliability objectives been established for each sub-system of the development and are these objectives quantitatively defined in terms of MTBF?
7. Has a specific reliability prediction and evaluation technique been selected from those available as illustrated in Figure 10–4?
8. Has the type of reliability program selected by the Project Manager been justified in the TDP?
9. Has the intended operational environment been considered when selecting types of reliability demonstration tests?
10. Has a complete plan been described covering the definition, design, prediction, monitoring and evaluation of reliability performance?
11. Has a thorough cost/effectiveness analysis been performed using the SOR availability goals as a basis?
12. Have quantitative maintainability requirements been stated?
13. Have maintainability objectives for each stage of system development been stated?
14. Has responsibility for implementing each part of the maintainability plan been assigned?
15. Does the maintainability plan establish a schedule whereby all maintainability efforts are reviewed and evaluated by the responsible activity?
16. Is the maintainability plan flexible enough to allow for modifications and improvements based on updated information?
17. Will implementation of the maintainability plan assure early prediction and ultimate formulation of a realistic and workable maintenance program which is in accordance with stipulations of the SOR?
18. Have human factors considerations been made integral to the design for maintainability?

* U. S. GOVERNMENT PRINTING OFFICE : 1966 O - 205-380

DOCUMENT CONTROL DATA - R & D

(Security classification of title, body of abstract and indexing annotation must be entered when the overall report is classified)

1. ORIGINATING ACTIVITY (Corporate author) Headquarters Naval Material Command (MAT 0325) Washington, D.C. 20360	2a. REPORT SECURITY CLASSIFICATION UNCLASSIFIED 2b. GROUP --

3. REPORT TITLE

GUIDE FOR THE PREPARATION OF PROPOSED TECHNICAL APPROACHES (PTA)

4. DESCRIPTIVE NOTES (Type of report and inclusive dates)

--

5. AUTHOR(S) (First name, middle initial, last name)

--

6. REPORT DATE February 1966	7a. TOTAL NO. OF PAGES 70	7b. NO. OF REFS --

8a. CONTRACT OR GRANT NO. -- b. PROJECT NO -- c. d.	9a. ORIGINATOR'S REPORT NUMBER(S) NAVMAT P3910-A 9b. OTHER REPORT NO(S) (Any other numbers that may be assigned this report) (SUPDOCS, GPO price $1.50) Navy Stock No. 0518-093-1000

10. DISTRIBUTION STATEMENT

THIS DOCUMENT HAS BEEN APPROVED FOR PUBLIC RELEASE AND SALE; ITS DISTRIBUTION IS UNLIMITED

11. SUPPLEMENTARY NOTES Companion document to NAVMAT P3910 "Guide for the Preparation of Technical Development Plans"	12. SPONSORING MILITARY ACTIVITY Headquarters Naval Material Command (MAT 0325) Washington, D.C. 20360

13. ABSTRACT

This document provides guidelines for the preparation of Proposed Technical Approaches (PTAs) and an explanation of the need for the required information. It is intended as a guide rather than an inflexible set of rules.

The PTA itself is the initial Research and Development document which forecasts procurement workload in R&D, and presents alternative approaches for a system or component concept stated or implied in a General Operational Requirement.

DD FORM 1 NOV 65 1473 (PAGE 1)

S/N 0101-807-6801

UNCLASSIFIED

Security Classification