This document has been approved
for public release and sale;
its distribution is unlimited.

AD_____

TECHNICAL REPORT

69-21-CM

FACTORS INFLUENCING THE IMPACT ENERGY ATTENUATION CAPABILITIES OF THE US ARMY FLYER'S PROTECTIVE HELMET (AFH-1)

by

Abraham L. Lastnik

July 1968

Project Reference:
1M6-43303-D547

Series: C&ED-48

Clothing and Organic Materials Laboratory
U. S. ARMY NATICK LABORATORIES
Natick, Massachusetts 01760

FOREWORD

Development of a military end item and the preparation of procurement documents does not end the U. S. Army Natick Laboratories relationship with the product. These Laboratories follow through the first procurements and personnel are available for technical consultation and assistance to assure continued high quality products as required by the specification.

This report discusses the crash energy attenuation characteristics of the U. S. Army Flyer's Protective Helmet AFH-1 as defined by the Quality Assurance data from the first procurement. These data show that mass production need not affect performance parameters established during the research and development phase.

CONTENTS

	Page
Abstract	
Introduction	1
Helmet Construction	1
Impact Test Requirement	1
Quality Assurance Impact Testing	4
Helmet Impact Sites	5
Effect of Impact Center Location on Energy Attenuation	6
Fitting Pads	7
Summary	8
Acknowledgements	9
References	10

LIST OF FIGURES

1. U. S. Army Flyer's Protective Helmet (AFH-1)	2
2. Cross Section Sketch of US Army Flyer's Protective Helmet (AFH-1)	3

ABSTRACT

Quality assurance impact testing of the U. S. Army's standard Flyer's Protective Helmet, covering more than 12,000 helmets, showed that uniformity of performance can be maintained during production. This testing further revealed factors that influence the impact energy attenuation capabilities of the helmet.

The Army's specification requires that the helmet shall sustain two successive impacts in each of four designated sites without bottoming or transmitting an excess of 300 G's to an instrumental headform. Because of the helmet's configuration and construction, the sides exhibited the greatest ability to attenuate impact energy, followed in descending order by the front and rear areas.

The distance between the impact center and the edge of the polystyrene foam liner is critical for second impact attenuation capabilities. A slow-recovery, expanded plastic component of the fitting pad assembly is an essential component of the energy-attenuating system. Absence of this pad will negate the second impact attenuation capabilities of the helmet.

The combined interaction of the shell, the crushable foam liner, and the slow-recovery plastic pads is required for the helmet to attenuate or dissipate maximum impacting loads.

FACTORS INFLUENCING THE IMPACT ENERGY ATTENUATION
CAPABILITIES OF THE U.S. ARMY FLYER'S PROTECTIVE HELMET (AFH-1)

Introduction

In October 1965, the United States Army adopted a new flight helmet (Figure 1) which was designed to provide improved impact energy attenuation over that of the previously used helmet. The helmet also provides a degree of resistance to penetration by ballistic fragments that has not been achieved previously by Army flight helmets [1].

Production was initiated in April 1966. More than 12,000 helmets were made by two manufacturers and placed into immediate service. The factors influencing the impact energy attenuation capabilities of this helmet, as shown by the data collected during quality assurance impact testing against the helmet specification requirements, [2] are discussed in this report.

Helmet Construction

The helmet was designed to dissipate impact energy by a combined interaction of the shell, crushable foam lining, and a slow-recovery, expanded plastic inner-liner. The shell is constructed from a laminated nylon cloth which is lined with 1/2-inch-thick, 4.5-pounds-per-cubic-foot-density, irreversibly crushable, expanded polystyrene plastic. Almost all of this liner is, in turn, lined with a slow-recovery expanded material made from a blend of polyvinyl chloride and butadiene acrylonitrite resins. This inner liner is a component of the sizing and comfort pad system in the helmet (Figure 2).

Impact Test Requirement

The specification for the Army Flight Helmet [2] requires that the helmet "...shall be subjected to two consecutive 144 foot-pound impacts in each of 4 positions. The helmet shall be impacted in the front center, rear center and on each side, on a locus defined by a plane transversely through the helmet 1 + 1/2, -0 inch above and paralled with the front and rear edges."

Impact tests are conducted with a drop-type apparatus. A 16-pound mass with a 1.9-inch-radius impacting surface is dropped onto a helmet mounted on a free-swinging hollow headform made from cast magnesium alloy which weighs 13 pounds [2,3,4]. An accelerometer, mounted on the inner surface of the headform directly below the point of impact, is connected to an oscilloscope that records acceleration as a function of time. The helmet is tested with the eyeshield and eyeshield assembly removed and the fitting pads and earmuffs in place.

Figure 1

US Army Flyer's Protective Helmet (AFH-1)

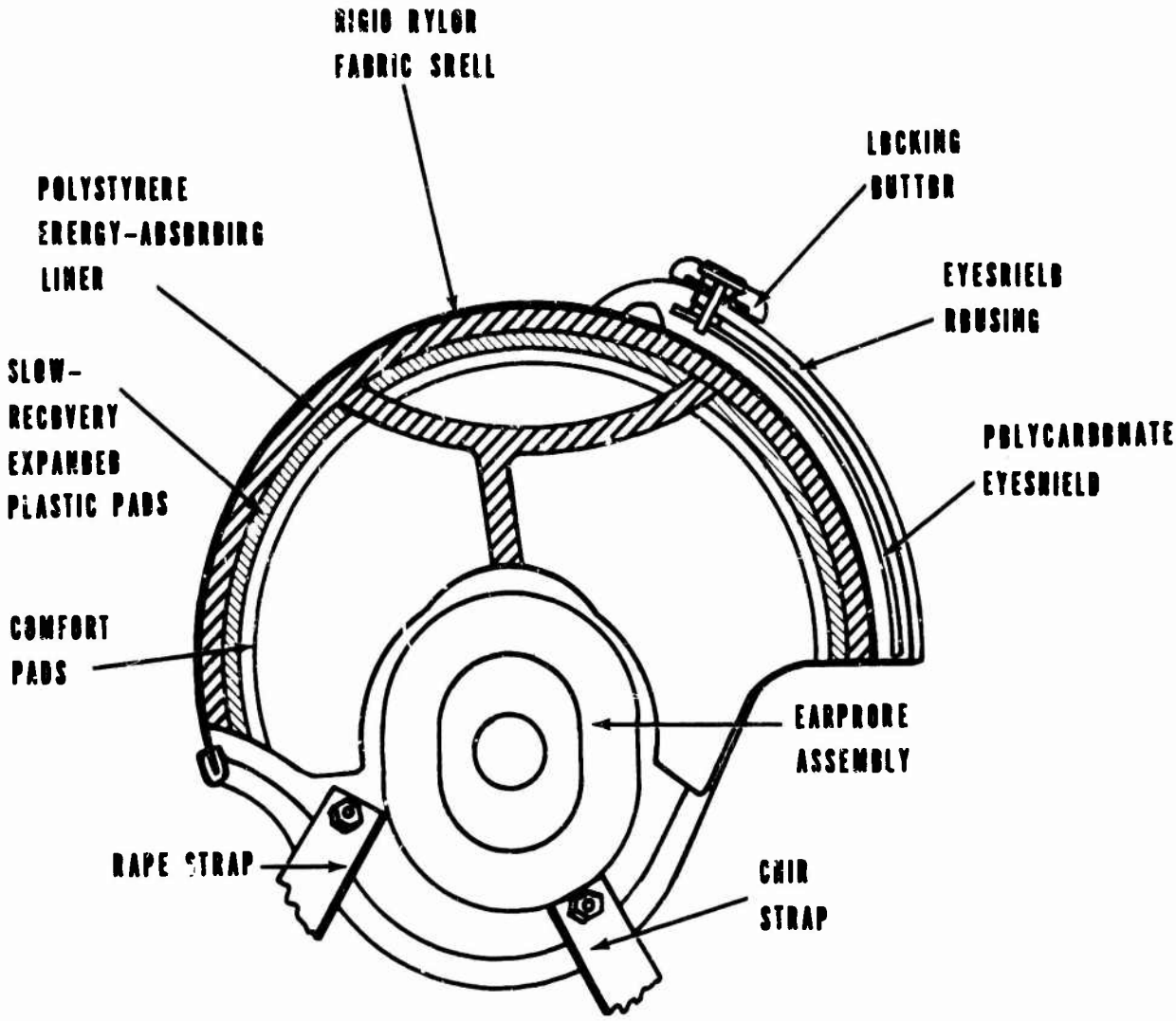

Figure 2

Cross-Sectional Sketch of US Army Flyer's Protective Helmet (AFH-1)

During its development, the helmet was shown to be capable of sustaining two successive impacts of 160 foot-pounds without bottoming or registering an excess of 300 G's [1]. For specification testing of the mass-produced helmet, the impact was established at a lower level (two successive 144 foot-pound impacts). A helmet will be judged to be unsatisfactory if either of the two impacts in any test site shows "evidence of bottoming, excess of 300 G acceleration or accelerated forces in excess of 150 G for more than four (4) milliseconds...."[2]

It may be argued that two successive impacts on the same helmet site are an improbable occurrence in a crash and, therefore, it is an unrealistic requirement.* Accepting this argument against the use of a dual impact standard, consider then its validity in terms of the reliability of the helmet to attenuate the critical first blow if it can effectively attenuate two successive impacts on the same site.

Quality Assurance Impact Testing

The Army's quality assurance testing procedure, for procurement of the flight helmet, requires that a random sampling from each production lot be tested against the impact standard. The nominal lot size of the Army's first flight helmet procurement was 1200 helmets with each impact test sample consisting of five units.

One manufacturer developed his own test facility while the second manufacturer engaged an independent engineering organization to provide the required testing services. The manufacturer who used his own test facility evaluated the impact test results on a "go-no-go" basis by observing the amplitude and width of the pulse on a memory oscilloscope, then wiping it away after noting that the impacted helmet satisfied the standard. Absolute data from this manufacturer are fragmentary. He did, however, provide photographic traces of some of the failures. Whenever the manufacturer noted a failure, he would ascertain the reasons and make necessary corrections to the helmet structure so that it would satisfy the specifications impact requirements. The information provided by this manufacturer was useful in evaluating the conduct of the components making up the energy attenuation system. The fragmentary information provided did correlate fairly well with the complete data package provided by the second manufacturer. These data represented 5,000 helmets. Table I shows the peak accelerations in G's and the standard deviation (SD) for two successive 144 foot-pound impacts averaged over 10 to 15 readings.

*Requirement for dual impacts is contained in U.S.A Standard Z90.1-1966 for Protective Headgear for Vehicular Users by United States of America Standards Institute.

TABLE I

PEAK ACCELERATION IN G'S AND THE STANDARD DEVIATION OF TWO SUCCESSIVE 144 FOOT-POUND IMPACTS TO FOUR SITES

Impact Site	Forehead		Right Side		Rear		Left Side	
	G	SD	G	SD	G	SD	G	SD
1st Blow	117	9	92	16	114	15	97	16
2nd Blow	159	35	97	19	198	44	105	30

Table I is concerned only with those tests that satisfied the impact standard. There were some tests, however, that were considered failures, but these were results of inadvertent deviation from the test method, such as omitting the fitting pads. Additional information was gleaned from the manufacturers' attempts to determine how the varying of test parameters may affect test results. These data, provided by both manufacturers, served to show the function shown by components of the helmet structure in the attenuation of impact energy.

Helmet Impact Sites

Four impact sites are used to define the helmet's impact energy attenuation capabilities. These sites also provide a sampling of the variability in the helmet's construction and geometry.

The frontal area of the helmet includes the greatest area coverage by the energy-absorbing liner. The impact center is 1 to 1-1/2 inches above the edge of the helmet. In the frontal area, the energy-absorbing foam extends to the edge of the helmet. The curvature of the shell, in this area, has a larger transverse radius than the other three impact sites. Thus, the capability of the liner to absorb impact energy is somewhat offset by the relative ease of deforming the large frontal curve of the shell.

The rear area (occipital area) of the helmet, with a more severe curvature than the frontal area, has a greater resistance to deformation, thereby having the potential of absorbing more impact energy. The first impacts (Table I) show, however, that the average impact energy attenuation capabilities of the front and rear areas are about the same with the rear area showing a greater variability. The second impacts in each of these areas show a marked increase in variability over the first impacts. Although each impact was located 1 to 1-1/2 inches above the helmet edge, the rear area had 3/8 to 7/8-inch of energy-absorbing liner (foamed styrene) extending below the impact center while the frontal area had 1 to 1-1/2 inches of liner extending below the impact center. This difference in the quantity of back-up liner could account for the apparent difference in the energy attenuation capabilities between the front and rear areas.

Side blows to the helmet are in an area that is covered with the least amount of energy-absorbing foamed plastic. The sides, however, exhibited the best attenuation characteristics with the least variability, as shown in Table I. The phenomenon may be attributed to the trussing effect provided by the bulging ear sections directly below the impact center. The uniformity of the helmet structure is evidenced by the similar impact attenuation characteristics exhibited by the two sides.

The helmet attenuated less impact energy as a result of the second blow with greater variability than the first impact. This is to be expected because the first blow irreversibly compresses some of the energy-absorbing liner. Throughout the entire test series, no incident of shell delamination, fracture, cracking, flexural failure or other types of lamination collapse was observed.

Effect of Impact Center Location on Energy Attenuation

The specified impact centers on the front and rear of the helmet are located 1 to 1-1/2 inches above the helmet edge. Below the specified impact centers, the attenuation capabilities are reduced because there is less energy-absorbing liner available to dissipate impact energy. Table II shows the peak G forces resulting from two successive blows to the rear and frontal areas at the specified impact distance from the helmet edge as compared with impacts at lesser distances from the edge.

When impacts to the front of the helmet are made above one inch or less than one inch from the helmet edge, the first blow, as shown in Table II , is comparable. The second blow shows a significant increase in energy transfer where the impact center is less than the specified one inch from the helmet edge.

The impact center in the rear of the helmet is 1 to 1-1/2 inches up from the edge. At this point, the energy-absorbing foam starts 5/8-inch above the edge so that communications wires may be accommodated. This provides for no less than 3/8-inch of liner extending below the impact center. Blows within the specified limits on correctly assembled helmets provide satisfactory attenuation results. Below specified impact center limits, the first blow will attenuate an acceptable level of energy; the second blow, as Table II shows, will be expected to exceed tolerable acceleration levels or cause bottoming.

TABLE II

ENERGY ATTENUATION CAPABILITIES OF HELMETS AS AFFECTED BY THE DISTANCE OF THE IMPACT CENTER FROM THE FRONT AND REAR HELMET EDGES

Impact Center from Helmet Edge	Distance from Impact Center			
	1 to 1-1/2 inch		Less than 1 inch	
Impact Site	1st	2nd	1st	2nd
Front	125 G	166 G	137 G	326 G
Rear	130 G	193 G	171 G	400+ G

Fitting Pads

The helmet has three fitting pads comprised of a front, back, and top. Each pad contains three 1/4-inch elements. One component, a slow-recovery, unicellularly expanded elastomeric plastic [5], is adhered to the energy-absorbing liner. This item must be used in each helmet because it forms a critical component of the energy attenuation system. In addition to dissipating impact energy and providing low-level bump protection to the head, it provides the helmet with second blow capabilities. The other two elements in each fitting pad are essentially comfort and adjustment pads and contribute very little to the helmet's impact energy attenuation system.

Peak accelerations of a test series from which the fitting pads were omitted are shown in Table III with the average test results of a subsequent series which incorporated the pads. Without the pads, the helmets that sustained the initial blow bottomed or recorded an excess of 400 G's as a result of the second blow. With pads incorporated in a retest series, the helmet demonstrated second blow capabilities within specified requirements.

TABLE III

PEAK ACCELERATION IN G'S AS A RESULT OF TWO 144 FT-LB IMPACTS

Sample No.	Front 1st	Front 2nd	Right Side 1st	Right Side 2nd	Rear 1st	Rear 2nd	Left Side 1st	Left Side 2nd
	Helmets Without Fitting Pads							
1	BTM	BTM	NR	214	370	400/	114	BTM
2	142	BTM	191	159	339	400/	122	132
3	260	BTM	117	139	339	400/	244	BTM
4	148	400/	110	BTM	400	400/	132	143
5	152	BTM	109	400/	400	400/	139	139
	Helmets With Fitting Pads							
Average Data	111	148	78	82	107	189	87	96

BTM - Bottom
NR - No Record

It is apparent, from Table III, that in helmets without fitting pads, the relative ranking of the impact sites with respect to their impact attenuation capabilities is the same as those helmets containing the full complement of fitting pads. The sides dissipate the most impact energy and the front area is slightly better than the rear of the helmet.

Summary

Table IV summarizes the helmet's attenuation capabilities under various conditions of test. This summary includes several readings from single helmet impacts. It is believed that the uniformity of helmet structure and reliability of the test results make one sample acceptable in this study.

TABLE IV

PEAK ACCELERATION IN G'S AS A RESULT OF TWO 144 FT-LB IMPACTS ON HELMETS

Helmet	Impact Sites							
	Front		Left Side		Rear		Right Side	
	1	2	1	2	1	2	1	2
With full complement of fitting pads	117	159	97	105	114	198	92	97
With no fitting pads	175	BTM	150	400+	300	400+	132	400+
With slow recovery pad only	114	317*	134	152	110	215	192	162
With 2 comfort pads only	150	347	184	215	139	400+	139	154
Impact less than 1 inch from edge	137	326			171	400+		

*Faulty impact: Pad ruptured
BTM - Bottom

Combined interaction of the shell, the rigid foam, and the slow-recovery component of the fitting pads is required to attenuate or dissipate the impacting loads.

The helmet shell acts as a load-distributing matrix which first resists deformation then, in deforming, spreads the impact energy over a large area. Energy is dissipated by crushing the rigid foamed polystyrene liner which should reduce the peak deceleration of the impacting head-helmet system. Simultaneously, the head when impinging against the fitting pads will expend a minimal quantity of energy in crushing the resilient comfort pads. It would require moreforce to compress the unicellular, slow-recovery foam pad than would be required for the resilient comfort pads. Energy is then dissipated by compressing the trapped gas and rupturing cell walls and spreading the load over a large surface area. Continued forward motion of the head in the helmet then crushes the rigid liner from the inside surface, further reducing the deceleration of the head.

Acknowledgments

Appreciation is extended to Mr. Michael S. Casey and Mr. Anthony L. Price, project engineers, and to their respective companies, General Tire and Rubber Company and Sierra Engineering Company, for providing the data used in this study.

References

1. Lastnik, A. L., Crash and Ballistic Protective Flight Helmet, Aerospace Medical Journal, Vol 38, No. 8, August 1967.

2. Helmet, Flying Protective (Crash and Ballistics), MIL-H-43388 (GL), 18 February 1966.

3. United States Standards Institute Specification Z90.1-1966, Protective Headgear for Vehicular Users, June 22, 1966.

4. Snively, G. G. and Chichester, C. C., Safety in Racing, Research Grant No. Rg-6094, Nat Inst of Health, U. S. Public Health Service.

5. Plastic, Sheet and Strip, Expanded, Unicellular, Elastomeric, MIL-P-12420, 21 September 1962.

UNCLASSIFIED

Security Classification

DOCUMENT CONTROL DATA - R & D

(Security classification of title, body of abstract and indexing annotation must be entered when the overall report is classified)

1. ORIGINATING ACTIVITY (Corporate author) U.S. Army Natick Laboratories Natick, Massachusetts 01760	2a. REPORT SECURITY CLASSIFICATION UNCLASSIFIED 2b. GROUP

3. REPORT TITLE

FACTORS INFLUENCING THE IMPACT ENERGY ATTENUATION CAPABILITIES OF THE U.S. ARMY FLYER'S PROTECTIVE HELMET (AFH-1)

4. DESCRIPTIVE NOTES (Type of report and inclusive dates)

Evaluation Report, 1965-1968

5. AUTHOR(S) (First name, middle initial, last name)

Abraham L. Lastnik

6. REPORT DATE July 1968	7a. TOTAL NO. OF PAGES 10	7b. NO. OF REFS 5
8a. CONTRACT OR GRANT NO. b. PROJECT NO. 1M6-43303-D547 c. d.	9a. ORIGINATOR'S REPORT NUMBER(S) 69-21-CM 9b. OTHER REPORT NO(S) (Any other numbers that may be assigned this report) C&ED-48	

10. DISTRIBUTION STATEMENT

This document has been approved for public release and sale; its distribution is unlimited.

11. SUPPLEMENTARY NOTES	12. SPONSORING MILITARY ACTIVITY U.S. Army Natick Laboratories Natick, Massachusetts 01760

13. ABSTRACT

Quality assurance impact testing of the U.S. Army's standard flight helmet, covering more than 12,000 helmets, showed that uniformity of performance can be maintained during production. This testing further revealed factors that influence the impact energy attenuation capabilities of the helmet.

The Army's specification requires that the helmet shall sustain two successive impacts in each of four designated sites without bottoming or transmitting an excess of 300 G's to an instrumented headform. Because of the helmet's configuration and construction, the sides exhibited the greatest ability to attenuate impact energy, followed in descending order by the front and rear areas of the helmet.

The distance between the impact center and the edge of the polystyrene foam liner is critical for second impact attenuation capabilities. A slow-recovery, expanded plastic component of the fitting pad assembly is an essential component of the energy-attenuating system. Absence of this pad will negate the second impact attenuation capabilities of the helmet.

The combined interaction of the shell, the crushable foam liner, and the slow-recovery plastic pads is required for the helmet to attenuate or dissipate maximum impacting loads.

DD FORM 1 NOV 65 1473 REPLACES DD FORM 1473, 1 JAN 64, WHICH IS OBSOLETE FOR ARMY USE.

UNCLASSIFIED

Security Classification

UNCLASSIFIED
Security Classification

14. KEY WORDS	LINK A ROLE	LINK A WT	LINK B ROLE	LINK B WT	LINK C ROLE	LINK C WT
Attenuation	8				4	
Impact	9		6		4	
Energy	9		6		4	
Helmet	10		7		9	
Flight	10		7		9	
Army	10		7		9	
Testing					8	

UNCLASSIFIED
Security Classification