AMRL-TR-67-227

AD 673903

# CARBON DIOXIDE REDUCTION AND WATER ELECTROLYSIS SYSTEM

*BYUNG C. KIM*
*EDWIN S. KOLIC*
*ROBERT H. CHERRY*
*JOHN E. CLIFFORD*

*Battelle Memorial Institute*
*Columbus Laboratories*

MAY 1968

Distribution of this document is unlimited. It may be released to the Clearinghouse, Department of Commerce, for sale to the general public.

AEROSPACE MEDICAL RESEARCH LABORATORIES
AEROSPACE MEDICAL DIVISION
AIR FORCE SYSTEMS COMMAND
WRIGHT-PATTERSON AIR FORCE BASE, OHIO

## NOTICES

When US Government drawings, specifications, or other data are used for any purpose other than a definitely related Government procurement operation, the Government thereby incurs no responsibility nor any obligation whatsoever, and the fact that the Government may have formulated, furnished, or in any way supplied the said drawings, specifications, or other data, is not to be regarded by implication or otherwise, as in any manner licensing the holder or any other person or corporation, or conveying any rights or permission to manufacture, use, or sell any patented invention that may in any way be related thereto.

Federal Government agencies and their contractors registered with Defense Documentation Center (DDC) should direct requests for copies of this report to:

DDC
Cameron Station
Alexandria, Virginia 22314

Non-DDC users may purchase copies of this report from:

Chief, Storage and Dissemination Section
Clearinghouse for Federal Scientific & Technical Information (CFSTI)
Sills Building
5285 Port Royal Road
Springfield, Virginia 22151

Organizations and individuals receiving reports via the Aerospace Medical Research Laboratories' automatic mailing lists should submit the addressograph plate stamp on the report envelope or refer to the code number when corresponding about change of address or cancellation.

Do not return this copy. Retain or destroy.

700 - July 1968 - CO455 - 42-903

AMRL-TR-67-227

# CARBON DIOXIDE REDUCTION AND WATER ELECTROLYSIS SYSTEM

*BYUNG C. KIM*
*EDWIN S. KOLIC*
*ROBERT H. CHERRY*
*JOHN E. CLIFFORD*

Distribution of this document is unlimited. It may be released to the Clearinghouse, Department of Commerce, for sale to the general public.

## FOREWORD

This report was prepared by the Columbus Laboratories of Battelle Memorial Institute on Contract No. AF 33(615)-3444 under Project No. 6373, "Equipment for Life Support in Aerospace" and Task No. 637302, "Respiratory Support Equipment." The work was performed under the direction of the Aerospace Medical Research Laboratories, Aerospace Medical Division, Wright-Patterson Air Force Base, Ohio, and was administered by Richard E. Bennett, Biotechnology Branch, Life Support Division, Biomedical Laboratory. The work reported here was done between 1 February 1966 and 30 September 1967.

The principal investigators for Battelle Memorial Institute were: J. E. Clifford, Project Leader; E. S. Kolic, Electrochemist; B. C. Kim, Senior Chemical Engineer; and Dr. R. H. Cherry, Senior Chemical Engineer. The work was done under the direction of Dr. C. L. Faust, Chief, Electrochemical Engineering Division.

This technical report has been reviewed and is approved.

WAYNE H. McCANDLESS
Technical Director
Biomedical Laboratory
Aerospace Medical Research Laboratories

## ABSTRACT

An integrated system for oxygen recovery from carbon dioxide was investigated as a breadboard laboratory model of nominal 1/2-man capacity. System design for carbon dioxide reduction was based on alternate operation of two Bosch reactors with periodic cool down for removal of carbon and replenishment of catalyst. Experimental studies demonstrated attainment of the design objectives of a carbon-to-catalyst ratio above 20 and an overall carbon-packing density of 0.45 g/cm$^3$ in the catalyst chamber. Degradation of Bosch reactor materials during extended operation was a problem that was not completely resolved. Experimental studies indicated that a regenerable solid-adsorbent based on combinations of silica gel and molecular sieve operating on alternate cycles of absorption and desorption can be used for efficient transfer of water vapor from the Bosch recycle gas to a water-vapor electrolysis cell. The original matrix-type water-vapor electrolysis unit with Pd-25Ag hydrogen diffusion cathodes did not perform satisfactorily and was replaced by a water-vapor electrolysis unit with phosphoric acid electrolyte for satisfactory evaluation of water-vapor transfer for the integrated system.

## TABLE OF CONTENTS


Page

SECTION I

INTRODUCTION . . . . . 1

SECTION II

PREDESIGN ANALYSIS OF SYSTEM INTEGRATION . . . . . 2

SECTION III

PREDESIGN EXPERIMENTAL STUDIES . . . . . 3

Water-Vapor Electrolysis Cell . . . . . 3
Silica-Gel Adsorbers . . . . . 4

SECTION IV

DESIGN AND CONSTRUCTION OF LABORATORY-MODEL SYSTEM . . . . 5

Process Flowsheet . . . . . 8
Carbon Dioxide Reduction . . . . . 8
Reactor . . . . . 9
Regenerative Heat Exchanger . . . . . 14
Insulation . . . . . 14
Recycle-Gas Blower . . . . . 14
Silica-Gel Adsorption Columns . . . . . 17
Instrumentation and Controls . . . . . 17
Equipment Assembly and Preliminary Checkout . . . . . 17
Water Electrolysis . . . . . 24

SECTION V

OPERATION OF LABORATORY - MODEL SYSTEM . . . . . 32

Operational Check-Out of PdAg Electrolysis Unit . . . . . 32
Silica-Gel Adsorbers . . . . . 33
Carbon-Dioxide Reduction . . . . . 34
Check-out Experiment . . . . . 36
Catalyst Activation . . . . . 37
Recycle Rate . . . . . 40
Recycle-Gas Composition . . . . . 40
Reactor Temperature . . . . . 42
Catalyst Consumption . . . . . 42

## TABLE OF CONTENTS
(Continued)


| | Page |
|---|---|
| Reactor Modification and Extended Test | 45 |
| Materials of Construction | 51 |
| Carbon Removal | 51 |
| Integrated Operation of Carbon Dioxide-Reduction and Water-Electrolysis Units | 53 |
| **SECTION VI** | |
| DESIGN OF A 3-MAN SYSTEM | 57 |
| Reactor Unit | 57 |
| Electrolysis Unit | 57 |
| Weight and Power Estimates on Integrated System | 57 |
| **SECTION VII** | |
| CONCLUSIONS | 62 |
| **SECTION VIII** | |
| RECOMMENDATIONS | 64 |
| **APPENDIX I** | |
| EQUIPMENT DETAILS AND OPERATING PROCEDURES | 65 |
| Reactor Operation | 65 |
| Water-Transfer Procedure | 65 |
| Calibration of Carbon Dioxide Analyzer | 66 |
| Reactor Gas Feeds | 69 |

## LIST OF FIGURES


| Figure | | Page |
|---|---|---|
| 1. | Material Balance on 1/2-Man Laboratory-Model System. . . . . | 1 |
| 2. | Carbon Dioxide Reduction and Water-Electrolysis System . . . . | 7 |
| 3. | Carbon Dioxide-Reduction Reactor . . . . . | 11 |
| 4. | Catalyst-Canister Assembly, Including Heater and Radiation Shields . . . . . | 12 |
| 5. | Reactor Unit With Regenerative Heat Exchanger . . . . . | 13 |
| 6. | Pressure Drop Through Regenerative Heat Exchanger Based on Air Flow . . . . . | 15 |
| 7. | Reactor-Heat Exchanger Housing . . . . . | 16 |
| 8. | Silica-Gel Adsorption Column (SG-1, -2, -3, -4, and -5) . . . . | 19 |
| 9. | Modified Silica-Gel Adsorption Column . . . . . | 21 |
| 10. | Front View of Laboratory-Model Assembly . . . . . | 22 |
| 11. | Side-Rear View of Laboratory-Model Assembly . . . . . | 23 |
| 12. | Vapor-Fed Pd-25Ag Electrolysis Unit. . . . . | 25 |
| 13. | Layout of Parts That Form a Single Cell of the Electrolysis Unit. . | 26 |
| 14. | An Assembled Cell Minus Matrix and Anode Screen . . . . . | 27 |
| 15. | A Completed Cell. . . . . | 27 |
| 16. | Display of Components of the Electrolysis Unit. . . . . | 28 |
| 17. | Several Teflon Baffles Stacked Together to Show Vapor Channels. . | 29 |
| 18. | Electrolysis Unit Ready for Installation Into Oxygen Loop . . . . | 30 |
| 19. | Oxygen Loop in Electrolysis Unit . . . . . | 31 |
| 20. | Rate of Carbon Dioxide Reduction and Reactor Temperature . . . | 38 |
| 21. | Reactor-Recycle Gas Composition at Reactor Inlet . . . . . | 39 |
| 22. | Effect of Recycle Rate on Reaction Rate . . . . . | 41 |
| 23. | Effect of $CO_2$ Concentration on Recycle-Gas Composition and Reaction Rate . . . . . | 41 |

## LIST OF FIGURES
(Continued)


| Figure | | Page |
|---|---|---|
| 24. | Reduction of Carbon Dioxide | 43 |
| 25. | Reduction of Carbon Dioxide | 44 |
| 26. | Effect of Carbon-to-Iron Ratio on Reaction Rate | 45 |
| 27. | Reactor Modification | 47 |
| 28. | Extended Testing of Reactor | 48 |
| 29. | Photograph of Reactor-Cap and Inside Heater Assembly After Test | 49 |
| 30. | Carbon Product and Catalyst-Canister Unit After Test | 50 |
| 31. | Flowsheet of Carbon-Removal System | 52 |
| 32. | Water-Vapor Electrolysis Module | 54 |
| 33. | Flowsheet of Water-Transfer and Electrolysis Loop | 55 |
| 34. | Reactor-Heat Exchanger Assembly | 58 |
| 35. | Flowsheet of Water-Transfer Unit | 67 |
| 36. | Sampling System for Carbon Dioxide Analyzer in Reactor Unit | 68 |
| 37. | Carbon Dioxide Analyzer Calibration | 69 |
| 38. | Flowsheet of Reactor Feed Unit | 70 |
| 39. | Hydrogen Flowmeter Calibration | 71 |


## LIST OF TABLES


| Table | | |
|---|---|---|
| I. | Design Parameters of Carbon Dioxide-Reduction Unit | 9 |
| II. | Silica-Gel-Adsorber Performance Data | 34 |
| III. | Weight and Power Penalties for Batch-Process Reactor | 35 |
| IV. | Summary of Test Results From Operation of Carbon Dioxide-Reduction Unit | 36 |
| V. | Analysis of Carbon From Test 59-49 | 42 |
| VI. | Test Data From Extended Operation of Modified Reactor Unit | 51 |

## LIST OF TABLES
(Continued)


| Table | | Page |
|---|---|---|
| VII. | Design and Operating Characteristics of Reactor-Heat Exchanger Assembly | 59 |
| VIII. | Primary Water-Adsorption Columns in Reactor Unit | 59 |
| IX. | Secondary Adsorption Column in Water-Transfer Loop | 60 |
| X. | Design and Operating Characteristics of Phosphoric Acid Water-Electrolysis Unit | 60 |
| XI. | Fixed Weight and Power Estimates on Integrated Carbon Dioxide-Reduction and Water-Electrolysis System | 61 |

## SECTION I

## INTRODUCTION

Recovery of oxygen from carbon dioxide and water vapor given off by man in the sealed environment of space operation will be required for advanced missions. Several methods are being considered, and the integration of the water-vapor electrolysis system using Pd-25Ag hydrogen diffusion cathodes and the Bosch reaction for carbon dioxide reduction to carbon represents one promising combination. The water electrolysis system is relatively new, but the Bosch system has been developed to an advanced stage over the past 8 years. Although flight prototypes of the Bosch reactor have been built, there are relatively few data available on operation for extended periods. Yet, the final choice of method will probably depend on extended operational reliability.

The present research was directed toward obtaining operational data with an integrated breadboard system containing laboratory-model equipment. Many experimental data pertinent to extended operational reliability can be obtained with laboratory-model equipment designed for gravity-independent operation in the laboratory but not necessarily the optimum engineering design for minimum weight. A breadboard-type system provides the flexibility needed to obtain data and make process improvements as a prelude to flight-prototype development.

The present research program was carried out in the following three phases:

Phase I. Predesign analysis and experiments
Phase II. Design, construction, and check out of a laboratory-model system
Phase III. Operational evaluation of the laboratory-model system.

A detailed topical report covering Phase I and Phase II was submitted to the sponsoring agency in January 1967. The results of the predesign analysis and experiments are summarized in this report as a prelude to presentation and discussion of results from the Phase III study.

## SECTION II

## PREDESIGN ANALYSIS OF SYSTEM INTEGRATION

A predesign analysis of system integration was carried out in the initial phase of the program. The objectives of this analysis were (1) to make a comparison of and a choice between two types of modified Bosch reactor systems, one based on continuous removal of carbon employing a single reactor unit and the other based on batchwise removal of carbon employing two reactor units, (2) to select a water-transfer method judged to be reliable and compatible with rest of the integrated system, and (3) to identify important operating parameters and define necessary design characteristics of the integrated system. The scope of the analysis covered only the modified Bosch unit and the palladium-silver water-electrolysis unit for system integration.

The analysis indicated that the two approaches to carbon removal show no substantial difference as far as the total system-weight penalties are concerned. The dual-reactor batch process was selected because it permits continued operation at 50 percent capacity upon failure of one of the reactor units in terms of conserving and utilizing carbon dioxide generated continuously by the crew. The analysis also showed that over 90 percent of the power input to the reactor is expended as heat loss by conduction through reactor and heat-exchanger insulation and as sensible-heat loss of reactor-recycle gas. This points out the necessity of optimizing the reactor unit with respect to design of reactor and heat-exchanger hardware, choice of insulation, and operating conditions.

Review of current literature on the problem of zero-gravity separation of water from gas revealed a number of devices that have been either tested or proposed. These include a porous-plate condenser-separator, a sponge collector equipped with a squeezing mechanism, a vortex separator, an elbow separator, a wick separator, and a rotary separator. In all of these methods, water is obtained as liquid, which must be evaporated to feed a matrix-type electrolysis cell, thus requiring an auxiliary device for evaporation of water under zero-gravity condition. The minimum dew point of moisture-bearing gas attainable with these systems is the freezing point of water. Furthermore, reliability for extended operation has not been established on any of these systems. On the basis of these considerations, it was recommended for the present study to investigate a solid-adsorbent device to remove water vapor from the Bosch reactor unit and regenerate water vapor directly.

## SECTION III

## PREDESIGN EXPERIMENTAL STUDIES

### Water-Vapor Electrolysis Cell

A water-vapor electrolysis cell using Pd-25Ag hydrogen diffusion cathodes appeared suitable for integration with the Bosch reactor. One advantage is that pure, dry hydrogen would be available for feed to the Bosch reactor at positive pressure (up to 15 psi) independent of oxygen pressure*. Gravity-independent operation required a matrix-type cell for immobilization of the alkaline electrolyte. A conceptual tubular cell design (similar to a tube-type heat exchanger) from prior work** was used as a basis for predesign analysis of the system (mainly weight and power estimates). The latter cell design was based on the use of a matrix inside (or outside) relatively large diameter, Pd-25Ag tubes (6.35-mm OD X 0.13-mm wall) that had been used extensively in experimental studies at Battelle. However, due to problems anticipated in tube assembly and water-vapor feed, this approach was abandoned in favor of a modified design based on parallel stacked cells consisting of small-diameter cathode tubes (1.3-mm OD x 076-mm wall) sandwiched between layers of matrix and anode screen. The latter cell design was amenable to high rates of forced gas flow for water vapor feed with low pressure drop and had been shown to provide stable operation of matrix-type water-vapor electrolysis cells in other studies at Battelle***. Since the modified design would require relatively small diameter tubes, concurrent experimental studies* were carried out to investigate the operating characteristics of the small-diameter cathode tubes.

The status of research information relating to water-electrolysis cells using Pd-25Ag cathodes that was available at the time of electrolysis cell design can be summarized as follows. Satisfactory extended operation was limited by the matrix. The best experimental result had been about 200 hours obtained with a microporous polyvinylchloride matrix at 65 ±5C*. A low temperature was desired to extend cell operating life with a matrix. However, a sufficiently high temperature was needed to obtain 100 percent hydrogen transmission at design cathode current density (about 37 ma/cm$^2$). The usual techniques applicable to the larger Pd-25Ag tubes for obtaining adequate performance at low temperature such as anodic activation in acid and catalyst treatment of the gas-phase side (inside of tube) were not amenable to small-diameter tubes. A vacuum annealing technique was developed as a practical and less time-consuming method of activating small-diameter tubes. The maximum efficient current density (MECD) was determined to be 65 ma/cm$^2$ at 77 C. Other experiments indicated that the decrease in hydrogen transmission was small for about twofold increase above the MECD (e.g., 97.3 percent at 123 ma/cm$^2$). From the above results it was concluded that satisfactory performance could be obtained at the planned operating temperature of 65 C. At best, limited satisfactory operation could be predicted because the nature of the matrix deterioration and cell life appeared to be related to the length of time from

*Kolic, E. S., and Clifford, J. E., "Water Electrolysis Cells Using Hydrogen Diffusion Cathodes", AMRL-TDR-67-65, Aerospace Medical Research Laboratories, Wright-Patterson Air Force Base, Ohio, November 1967.

**Clifford, J. E., Kolic, E. S., and Faust, C. L., "Research on a Gravity-Independent Water-Electrolysis Cell With a Lalladium Palladium-Silver Alloy Cathode", AMRL-TDR-64-44 (AD 603358), Wright-Patterson Air Force Base, Ohio, June 1964.

***Clifford, J. E., "Water-Vapor Electrolysis Cell With Phosphoric Acid Electrolyte", Paper No. 670851 presented at SAE meeting, Los Angeles, California, October 5, 1967, based on studies at Battelle Memorial Institute under NASA NAS2-2156, NASA CR-771 (June 1967).

initial impregnation with electrolyte and the time at operating temperature regardless of whether the cell was being used for electrolysis. The estimated 9-day life appeared adequate for establishing feasibility of operation in an integrated system.

## Silica-Gel Adsorbers

Adsorption study was carried out to determine sorption capacity of silica gel under the conditions that would be expected in operation of the integrated system. Experimental study showed that the specific rate of adsorption and the adsorption capacity can be increased significantly by using a combination of a buffer-grade and a regular-grade silica gel and by cooling the silica-gel bed to remove heat of adsorption. An adsorber was designed and operated to attain high adsorption capacity and efficient removal of moisture from gas. A typical experimental test result was 0.39 g $H_2O$/g adsorbent and exit dew point well below the target level of -2.2 C. Higher adsorption capacity and lower dew point were obtained in subsequent integrated operation of adsorbers on Bosch recycle gas.

## SECTION IV

## DESIGN AND CONSTRUCTION OF LABORATORY-MODEL SYSTEM

A 1/2-man laboratory model of an integrated carbon dioxide-reduction and water-electrolysis system was designed and constructed. The unit was designed to produce 453 g/day of oxygen and 170 g/day of elemental carbon from 623 g/day of pure carbon dioxide. Material balance around the 1/2-man unit is given in Figure 1. The unit was designed to be used primarily as a research apparatus for process studies. No attempt was made, therefore, to optimize the design of individual components or the overall system with respect to fixed weight and power, since these considerations were outside the scope of the present study and would properly belong to the design of a prototype system.

The laboratory-model system was designed on the basis of the methodology developed and operating parameters investigated in the predesign analysis and experimental studies carried out in Phase I.

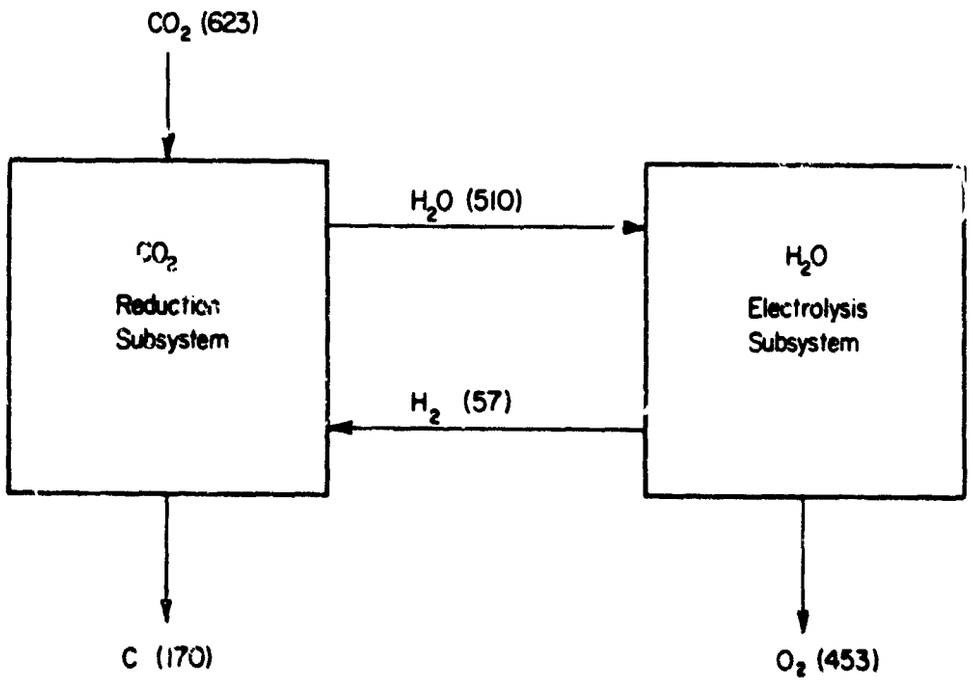


FIGURE 1. MATERIAL BALANCE ON 1/2-MAN LABORATORY-MODEL SYSTEM

(Units: g/day)

## Legend for Figure 2

| Symbol | Description |
|---|---|
| R-1, R-2 | Reactors; $CO_2$ reduction |
| HX-1, HX-2 | Regenerative heat exchangers; gas-to-gas |
| HX-3 | Heat exchanger; $O_2$ cooling |
| SG-1, -2, -3, -4 | Silica-gel adsorption columns; moisture removal from reactor-recycle gas |
| SG-5 | Silica-gel column; storage and feeding of water vapor to electrolysis unit |
| E | Electrolysis unit |
| B-1, -2 | Gas pumps; recycle of gas through reactors |
| B-3 | Blower; recirculation of oxygen through electrolysis unit |
| H-I/R | Humidity indicator-recorder |
| $H_2$-D/R | Hydrogen detector-indicator |
| FM-1, -2 | Rotameters; reactor-recycle gas |
| FM-3, FM-4 | Rotameter; $CO_2$ feed to reactor units |
| FM-5 | Rotameter; $O_2$ flow through silica-gel columns (SG-1, -2, -3, or -4) during desorption operation |
| $H_2$-FI/R | Mass-flow indicator-recorder; $H_2$ output from electrolysis unit and feed to reactor units |
| F-1, -2, -3 | Gas filters |
| WTM | Wet test meter; $O_2$ output from electrolysis unit |
| BPR | Back-pressure regulator; pressure control on anode side of electrolysis unit |
| SV | Solenoid valve; control of $CO_2$ feed to reactor units |
| $CO_2$-A/C | Infrared analyzer-controller; $CO_2$ concentration in reactor-recycle gas |
| 4WVA | 2-stack, 4-way valves; switching of silica-gel columns (SG-1, -2, -3, and -4) |
| 4WVB | 2-stack, 4-way valve; switching recycle-gas flow through $CO_2$ analyzer-controller |
| P | Pressure gage |
| T | Chrome-Alumel thermocouples |
| T-C | Temperature controller; sheath temperature of heaters inside reactors |
| ΔP-1, -2, -3 | Differential-pressure gages |
| ΔT | Differential-temperature gage |

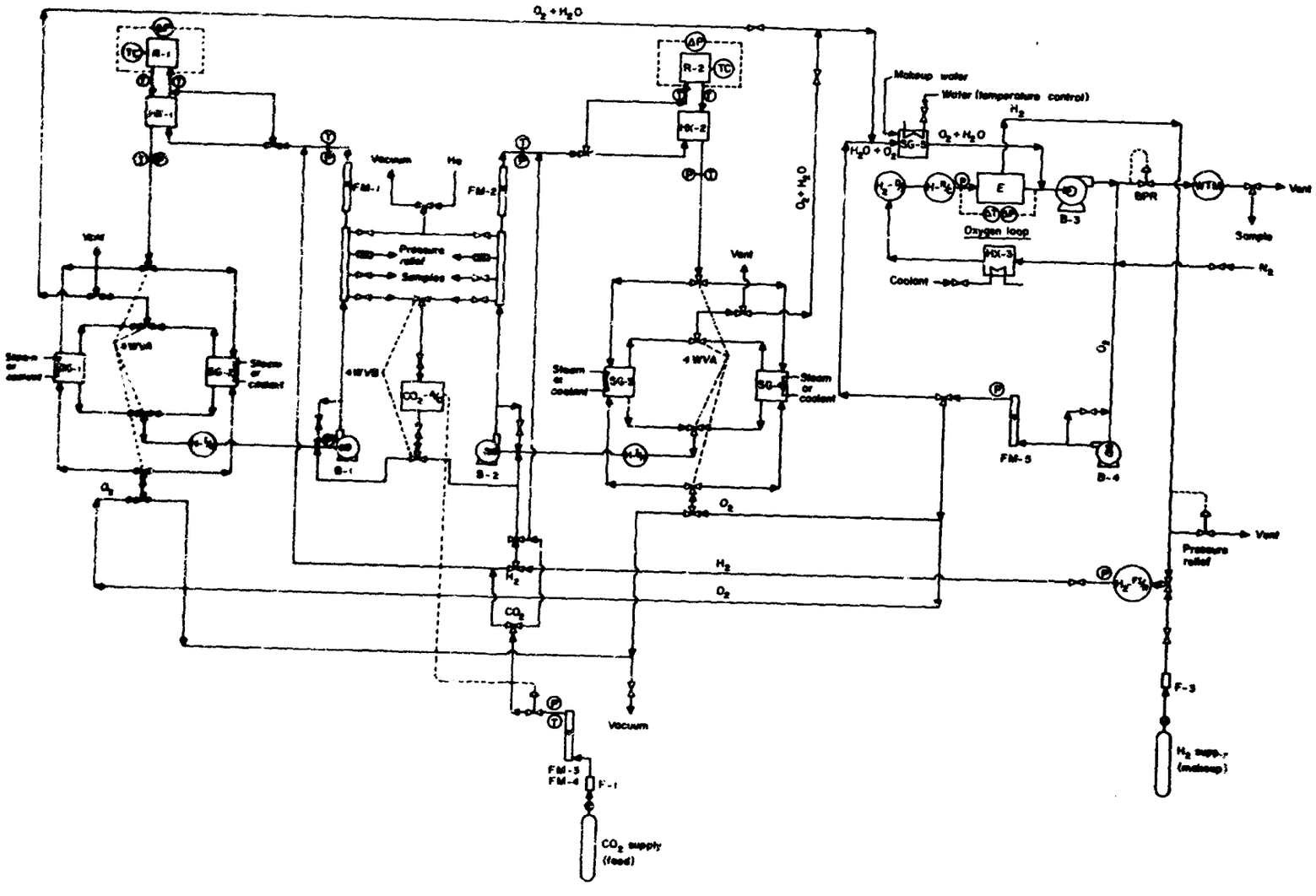


FIGURE 2. CARBON DIOXIDE REDUCTION AND WATER-ELECTROLYSIS SYSTEM

## Process Flowsheet

A flowsheet of the laboratory-model system is given in Figure 2. Two reactor units, operating separately batchwise, and an electrolysis unit were incorporated in the integrated system. The system was designed to produce oxygen from carbon dioxide supplied in a pure form.

Each reactor unit consists of a high-temperature reactor (R-1 or R-2), a regenerative heat exchanger (HX-1 or HX-2), two silica-gel adsorbers (SG-1 and SG-2 or SG-3 and SG-4), a recycle-gas blower (B-1 or B-2), and a recycle-gas flowmeter (FM-1 or FM 2). The two adsorbers in each unit would be switched periodically during reactor operation so that one of the adsorbers is on stream to remove product water from the recycle gas while water is desorbed from the other adsorber. Oxygen from the electrolysis unit would be used as a carrier gas and recirculated through the adsorber to remove water. Provisions were made to purge and vent the reactor gas remaining in the adsorber at the end of a sorption cycle by evacuation at the start of desorption and to purge oxygen remaining at the end of desorption also by evacuation before the adsorber is returned to the reactor-recycle loop. A moisture analyzer and a carbon dioxide analyzer were incorporated in the recycle loop to measure continuously moisture content at the outlet of adsorbers and concentration of carbon dioxide at the inlet of the regenerative heat exchanger. A solenoid valve would be actuated by a signal from the carbon dioxide analyzer to regulate the feed rate of carbon dioxide into the reactor unit.

The electrolysis unit consists of a matrix-type cell (E), a blower (B-3) for circulation of oxygen on the anode side of the cell, a heat exchanger (HX-3) for controlling temperature of oxygen at the inlet of cell, a silica-gel column (SG-5) for storage and supply of water vapor, and a blower (B-4) for circulating oxygen between the electrolysis and the reactor units to transfer water. Water-vapor feed to the oxygen loop in the electrolysis unit would be controlled to maintain the humidity of oxygen at the inlet of the cell at the desired level by regulating the flow rate of oxygen through the silica-gel column (SG-5) and the column temperature or both. Hydrogen would be generated at a sufficiently high pressure on the cathode side of the cell to be fed directly into the reactor unit without pumping. A wet test meter was provided to determine oxygen produced from the cell, and a flow indicator-recorder was incorporated in the hydrogen-feed line. Provisions were made to introduce carbon dioxide feed and makeup hydrogen feed into the reactor unit from cylinders and to introduce makeup water into the cell unit by direct injection of liquid water into the silica-gel column (SG-5). Parts of the flowsheet as well as operating procedures are discussed in more detail in Appendix I.

## Carbon Dioxide Reduction

Two identical units of apparatus were designed and constructed to carry out reduction of carbon dioxide with hydrogen. The units were to be operated and shut down on alternate cycles to achieve continuous utilization and reduction of available carbon dioxide and to remove accumulated carbon and replace catalyst on a batch basis. Major components of each unit included a high-temperature reactor, a regenerative heat exchanger, a pair of silica-gel adsorbers, a recycle-gas blower, and instrumentation.

Design parameters of the reactor unit are given in Table I. The values given in the table were arrived at on the basis of the Phase I study. Design and construction of apparatus are discussed below.

TABLE I. DESIGN PARAMETERS OF CARBON DIOXIDE-REDUCTION UNIT

| | |
|---|---|
| Nominal Capacity | 1/2-man |
| Rate of Carbon Dioxide Feed, $cm^3$/min, STP | 220 |
| Rate of Water Production, g/hr | 21.3 |
| Rate of Carbon Accumulation, g/hr | 7.08 |
| Reactor | |
| Catalyst Consumption, g iron/g carbon | 0.1 |
| Density of Carbon, g/$cm^3$ | 1.8 |
| Operating Period/Cycle, days | 4 |
| Catalyst Chamber Volume; 4 x carbon deposit, $cm^3$ | 1510 |
| Operating Temperature, C | 650 |
| Operating Pressure, mm Hg (gage) | $\leq$258 |
| Regenerative Heat Exchanger | |
| Heat-Transfer Efficiency, percent | $\geq$90 |
| Recycle Rate, l/min, STP | 14.5 |
| Silica-Gel Adsorption Columns | |
| Upper Limit of Sorption, g $H_2O$/g dry gel | 40 |
| Lower Limit of Desorption, g $H_2O$/g dry gel | 30 |
| Operating Period/Sorption Cycle, hr | 4 |
| Weight of Silica Gel, g | 284 |

## Reactor

A tubular reactor with a rod heater and an annular catalyst chamber, slightly modified from the unit employed by Remus*, was designed and constructed. A schematic drawing of the reactor is shown in Figure 3. The reactor consists of two concentric tubes, the inner tube containing a catalyst canister and an electric heater. Gas enters at the bottom of the reactor, flows up through the annulus between the tubes, flows down around the heater and through the catalyst chamber, and exits from the bottom of the reactor. The catalyst canister consists of a tube with a removable lid, four layers of wire screen at the bottom for supporting catalyst and containing carbon formed in the reaction, and a tubular enclosure for the heater at center. Three layers of radiation shields were placed above the catalyst canister. A photograph of the canister assembly, the radiation shields, and the electric heater is shown in Figure 4.

Overall dimensions of the catalyst chamber and the reactor are 8.5-cm diameter by 28.8-cm length and 10.5-cm diameter by 30.3-cm length, respectively. Working volume of the catalyst chamber was estimated as 1490 $cm^3$ as compared to the original design level of 1510 $cm^3$. All parts of the reactor, excluding the heater, the catalyst canister, and the radiation shields, were constructed of Type 347 stainless steel. A photograph of the reactor assembly, including the regenerative heat exchanger and a removable cap for the reactor, is shown in Figure 5.

*Remus, G. A., Neveril, R. B., and Zeff, J. D., "Carbon Dioxide Reduction System", AMRL-TDR-63-7 (AD 402419), Aerospace Medical Research Laboratories, Wright-Patterson Air Force Base, Ohio, January 1963.

## Legend for Figure 3

(1) Electric heater; 1.27-cm diameter, 20.3 cm of bottom section heated, Incoloy 800 sheath, 115 volts alternating current, 300 watts

(2) Reactor ends; Type 347 stainless, 3-1/2-inch pipe cap, Schedule 10, 10.16-cm OD by 0.305-cm wall by 3.81-cm length

(3) Radiation shields; Type 304 stainless sheet, 0.0254-cm thickness, 3 layers

(4) Heater enclosure; Type 304 stainless, a short piece of tubing (2.54-cm OD by 0.089-cm wall by 6.98-cm length) joined to a tube (1.84-cm OD by 20.48-cm length) made of 16-mesh (0.0508-cm-OD wire) screen and closed at bottom end

(5) Lid for catalyst canister; Type 304 stainless plate, 8.93-cm diameter by 0.318-cm thickness, with a 2.54-cm hole at center

(6) Conoseal tube joints; Type 347 stainless, 4-inch nominal size

(7) Inner reactor tube; Type 347 stainless, 3-1/2-inch tubing, 8.89-cm OD by 0.165-cm wall by 28.80-cm length

(8) Catalyst-canister wall; Type 304 stainless sheet, 8.52-cm OD by 0.0254-cm wall by 28.30-cm length

(9) Catalyst chamber; approximately 1490 $cm^3$

(10) Gas-inlet channel; 0.33-cm clearance

(11) Outer reactor tube; Type 347 stainless, 3-1/2-inch pipe, Schedule 10, 10.16-cm OD by 0.305-cm wall by 26.51-cm length

(12) Catalyst-support screens, Type 304 stainless, 1 layer of 16-mesh (0.0508-cm-OD wire) plus 3 layers of 200-mesh (0.00533-cm-OD wire) screens, recessed approximately 0.079 cm from bottom edge of canister wall

(13) Canister-support plate; Type 304 stainless, 0.305-cm thickness

(14) Inlet-gas tube; Type 321 stainless, 1/2-inch tubing, 1.27-cm OD by 0.124-cm wall. Center of tube is located 1.78 cm below the bottom edge of outer shell and 3.89 cm from the reactor axis

(15) Outlet-gas tube; Type 347 stainless, 3/4-inch tubing, 1.90-cm OD by 0.165-cm wall

(16) Temperature probe at reactor outlet; 0.318-cm-OD sheathed thermocouple, Chromel-Alumel

(17) Gas inlet to regenerative heat exchanger; Type 304 stainless, 3/8-inch tubing, 0.953-cm OD by 0.089-cm wall

(18) Temperature probe at reactor inlet; 0.318-cm-OD sheathed thermocouple, Chromel-Alumel

(19) Gas outlet from regenerative heat exchanger; Type 304 stainless, 3/8-inch tubing, 0.953-cm OD by 0.089-cm wall

(20) Outer wall of regenerative heat exchanger; Type 304 stainless, 5/8-inch tubing, 1.588-cm OD by 0.089-cm wall

(21) Gas-inlet tube; Type 304 stainless, 1/4-inch tubing, 0.635-cm OD by 0.089-cm wall; the inlet is normally closed during reactor operation and used during reactor cool-down to bypass the regenerative heat exchanger.

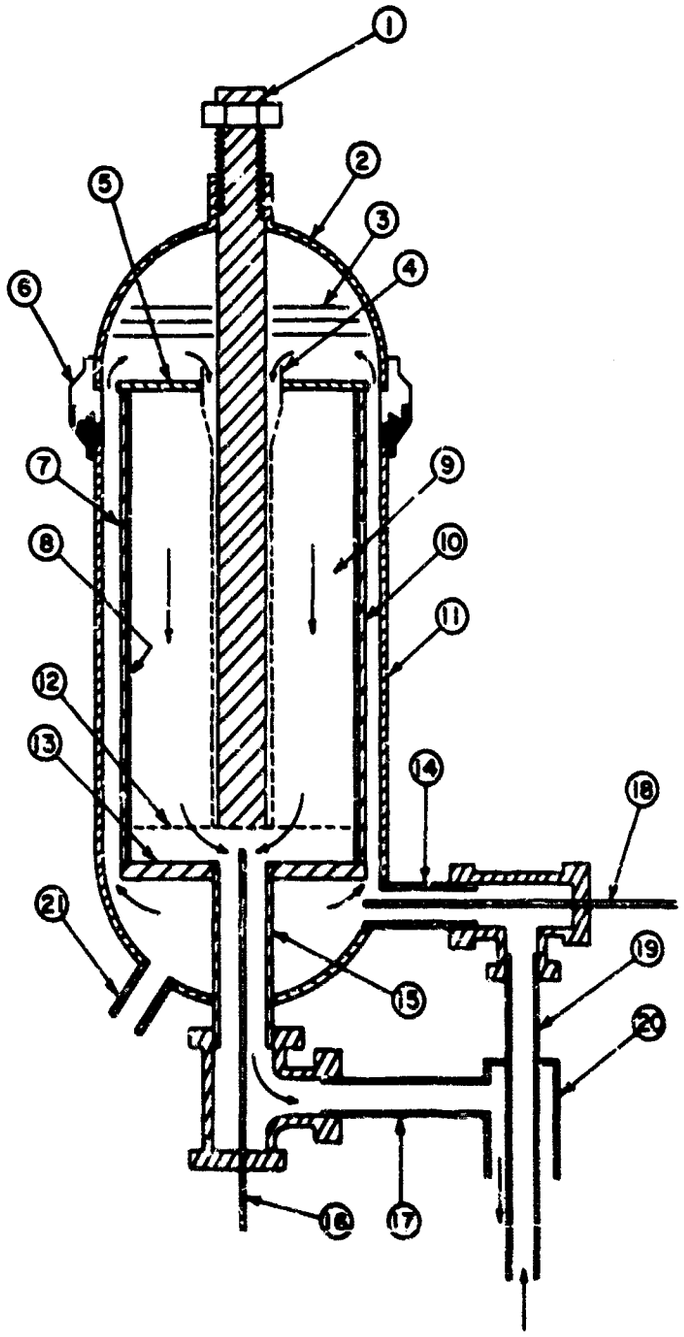


FIGURE 3. CARBON DIOXIDE-REDUCTION REACTOR

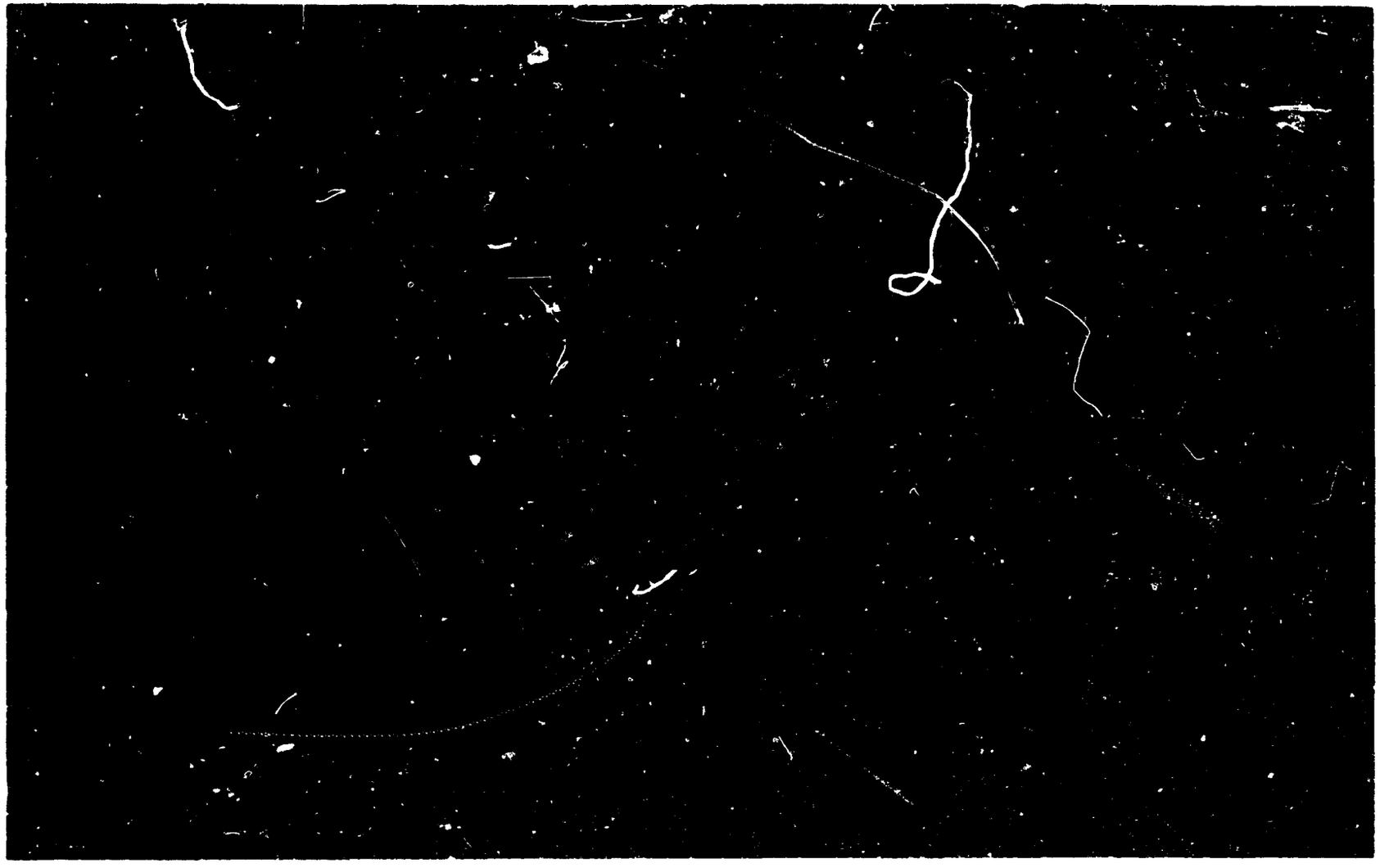

FIGURE 4. CATALYST-CANISTER ASSEMBLY, INCLUDING HEATER AND RADIATION SHIELDS

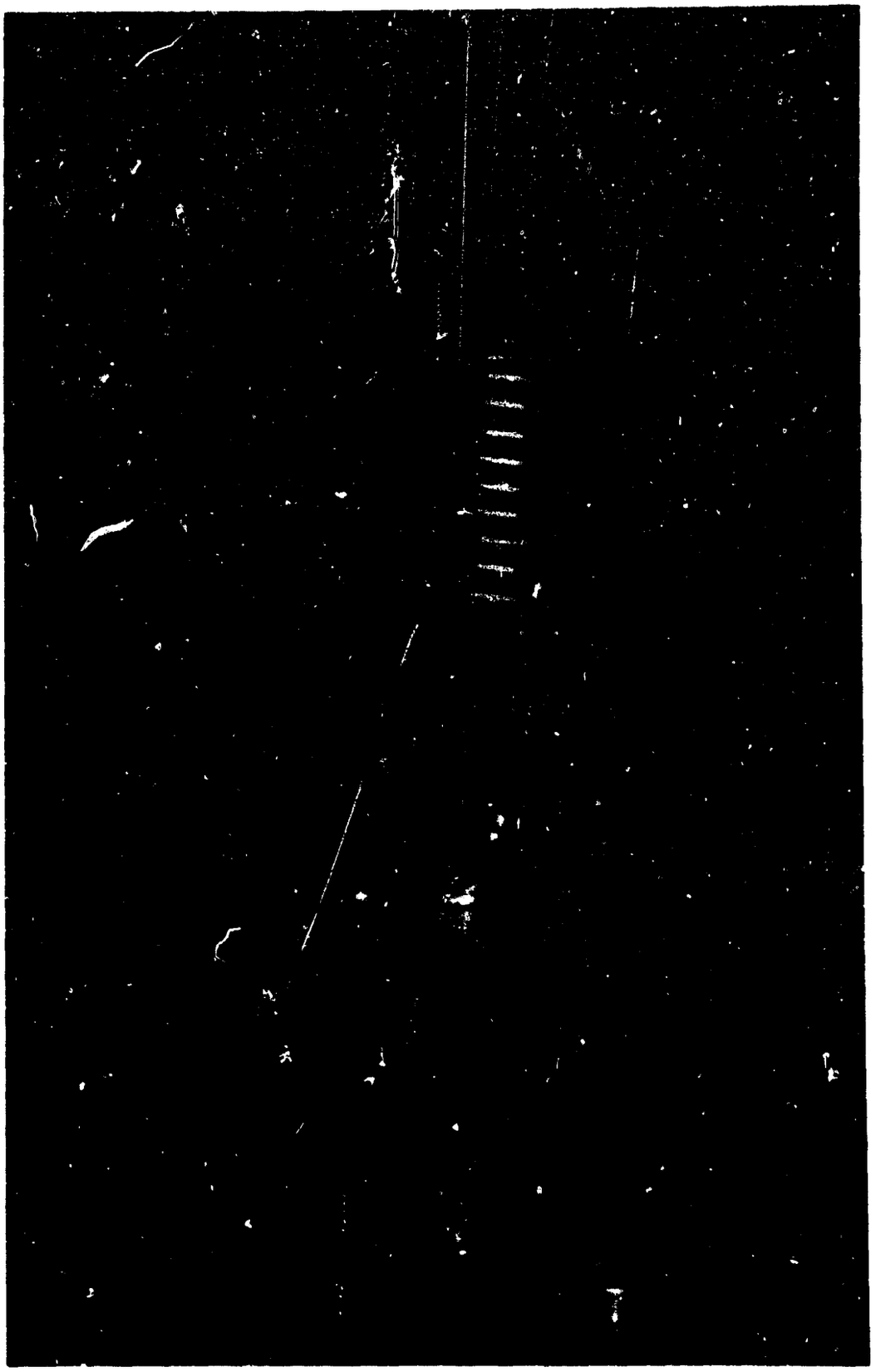

FIGURE 5. REACTOR UNIT WITH REGENERATIVE HEAT EXCHANGER

A sheathed thermocouple for measuring reactor temperature is located at the gas-outlet side between the canister support plate and the canister bottom. Additional thermocouples are located at the reactor inlet and on the outside wall of the reactor. An auxiliary tape heater with a capacity of 200 watts was wrapped around the reactor to augment the 300-watt capacity of the rod heater.

## Regenerative Heat Exchanger

A gas-to-gas countercurrent heat exchanger was constructed of two concentric tubings. Attempts to acquire a plate-fin-type unit from commercial suppliers were unsuccessful. The heat exchanger, designed on the basis of the unit employed in a prior study by Remus*, consists of a 3/8-inch tubing (0.953-cm OD by 0.089-cm wall by 418-cm length) inserted in a 5/8-inch tubing (1.588-cm OD by 0.089-cm wall by 418-cm length). Hot gas from the reactor flows through the annulus and cold gas enters the reactor through the inner tubing. The two tubings were coiled into a helix with approximately 9 turns, 15-cm OD, and a 0.64-cm clearance between the coils. The tubings are made of Type 304 stainless steel.

A photograph of the assembled unit is shown in Figure 5. In order to prevent the tubings from collapsing during coiling, a thin copper rod (0.130-cm diameter) was wound around and soldered to the inner tubing, and the annulus and the inner tubing were filled with Wood's metal. After the tubings were coiled into the finished form, the Wood's metal was removed by heating with steam.

Pressure-drop data obtained with air are shown in Figure 6.

## Insulation

The reactor-heat exchanger assembly was enclosed in a cylindrical housing in two sections shown in Figure 7. The bottom section with 30.5-cm ID by 78.7-cm length holds the assembly and was filled with vermiculite for insulation. The top section, which is removable, with 30.5-cm ID by 19.1-cm length was filled with a felt-type insulation ("Micro-Fibers Felt, Type E", 0.064 g/cm$^3$). After assembly, the can was further insulated on the outside at the top and on the side with a 1.74-cm layer of the felt-type insulation.

## Recycle-Gas Blower

The blower unit consists of a carbon-vane, rotary compressor (Gast Model 0630-101) and an induction motor (Globe Type LCLL, 115 v, ac, 60-cycle, 1-phase, 3400 rpm, 60 watts) mounted inside a cylindrical, stainless steel housing. The compressor capacity at 3400 rpm is approximately 14 liters/min of air at standard conditions and a delivery pressure of 258 mm Hg gage.

*Remus, G. A., op. cit.

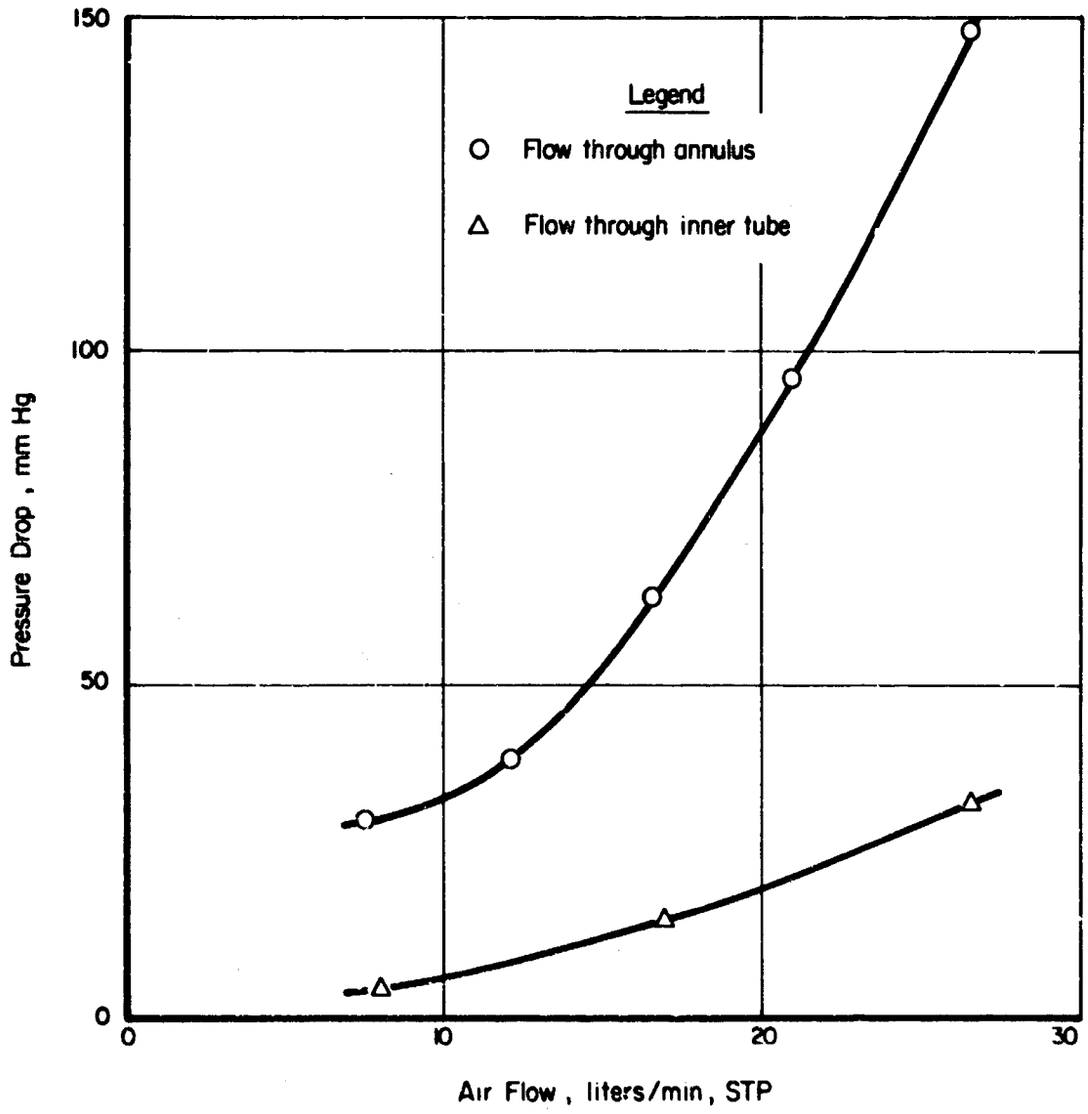


FIGURE 6. PRESSURE DROP THROUGH REGENERATIVE HEAT EXCHANGER BASED ON AIR FLOW

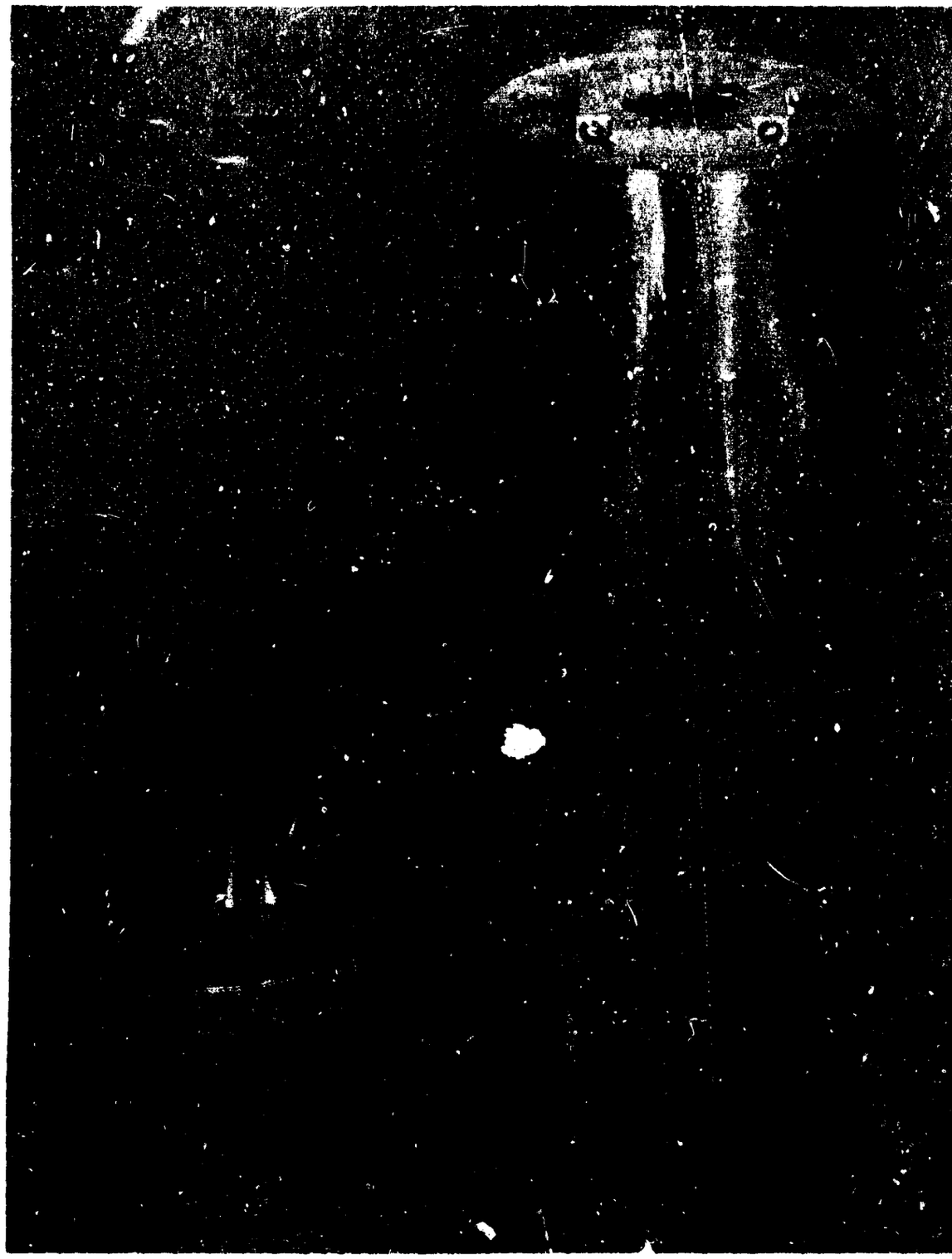

FIGURE 7. PHOTOGRAPH OF REACTOR-HEAT EXCHANGER HOUSING

## Silica-Gel Adsorption Columns

A schematic drawing of silica-gel columns initially designed and constructed is shown in Figure 8. All five units (SG-1 through SG-5) were identical in design. A double-wall column with an internal, finned-tube heat exchanger was designed. Cooling water flows down through the internal tube and up through the annulus between two column walls. Reactor-recycle gas enters the column at the bottom and exits at the top.

Columns in the reactor unit (SG-1 through SG-4) were packed with equal volumes of Grade 59 and Grade 05 silica gel. Approximately 100 g of Grade 59 was contained in the bottom-half section and 200 g of Grade 05 in the top-half section of each column. The column (SG-5) used for storage and feed of water vapor to the electrolysis unit was packed with 200 g of Grade 59 silica gel. Chromel-Alumel thermocouples were positioned in the column to measure inlet and outlet gas temperatures and the bed temperature at midpoint of the column. The columns and cooling-water lines were insulated with foamed-rubber insulation (Armstrong "Armaflex" pipe insulation, 1.91-cm thickness on the columns and 0.95-cm thickness on the cooling-water lines).

In the operational checkout of the reactor unit, the column showed entrainment of silica-gel particles from its open top. A considerable temperature difference between the column interior and coolant during sorption also indicated poor heat-transfer characteristics of the unit. Therefore, new columns were designed and constructed. In the modified design, shown schematically in Figure 9, thickness of the inner-tube wall was reduced and the longitudinal fins in the column interior were extended to the inner wall to improve heat transfer. Wire screens were fastened at both ends of the column to contain and to prevent entrainment of solids.

The columns in the reactor loops (SG-1, -2, -3, and -4) were loaded with an equal-volume mixture of a buffer-grade (Davison Grade 59) and a regular-grade (Davison Grade 05) silica gel. The buffer-grade gel was loaded in the lower half of the column, which comes into initial contact with moisture-bearing recycle gas. Each column was loaded with 153 g (approximately 390 $cm^3$) and 271 g (approximately 385 $cm^3$) of the buffer-grade and the regular-grade gel, respectively. The column without silica gel weighed approximately 1.8 kg.

## Instrumentation and Controls

The control scheme adopted for operating the reactor unit involved (1) feeding the entire output of hydrogen from the electrolysis unit into the reactor unit, (2) regulating the feed rate of carbon dioxide automatically to maintain the concentration of carbon dioxide in the recycle-gas mixture within a given range, and (3) controlling the operating pressure below 258 mm Hg gage by regulating the recycle rate manually.

## Equipment Assembly and Preliminary Checkout

A support frame, with dimensions of 158-cm width by 177-cm height by 82-cm depth, was constructed to mount the entire laboratory-model system. Instruments and valves were mounted on a panel board, 158 cm wide and 128 cm high. A front view of the assembled unit is shown in Figure 10. Reactor units, silica-gel columns, electrolysis unit, and blowers were mounted behind the instrument panel. A side-rear view of the assembly, given in Figure 11, shows various instruments on the right and, on the

## Legend for Figure 8

(1) Recycle-gas outlet; 3/8-inch copper tubing, 0.953-cm OD by 0.089-cm wall

(2) Removable lid; copper plate, 7.05-cm diameter by 0.635-cm thickness

(3) "Neoprene" O-ring

(4) Silica-gel column; 2-inch copper tubing, 5.08-cm OD by 0.159-cm wall by 43.18-cm length

(5) Cooling-water jacket; 2-1/2-inch brass tubing, 6.35-cm OD by 0.159-cm wall by 35.56-cm length

(6) Silica-gel bed

(7) Annular cooling-water channel

(8) Four longitudinal fins; copper, 1.27-cm width by 0.203-cm thickness by 37.10-cm length

(9) Cooling-water channel; 1/2-inch copper tubing, 1.27-cm OD by 0.089-cm wall

(10) Silica-gel-support screen; Type 304 stainless steel, 16 mesh (0.0508-cm-OD wire)

(11) Recycle-gas inlet; 3/8-inch copper tubing, 0.953-cm OD by 0.089-cm wall

(12) Cooling-water inlet; 3/8-inch copper tubing, 0.953-cm OD by 0.089-cm wall

(13) Cooling-water outlet; 3/8-inch copper tubing, 0.953-cm OD by 0.089-cm wall

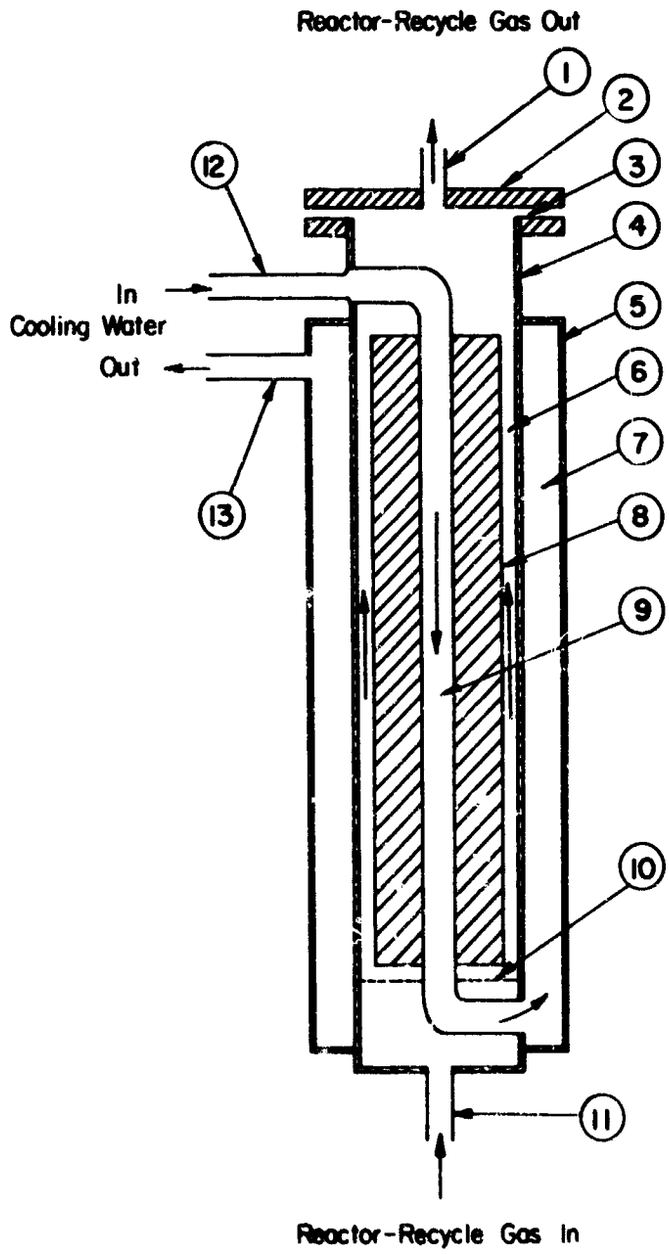


FIGURE 8. SILICA-GEL ADSORPTION COLUMN
(SG-1, -2, -3, -4, and -5)

## Legend for Figure 9

| Nomenclature | Quantity | Material | Dimensions: Metric, mm | Dimensions: English, inches |
|---|---|---|---|---|
| (1) Inlet/outlet, gas | 2 | S/S | 9.525 OD by 0.889 wall | 3/8 OD by 0.035 wall |
| (2) End plate and flange | 2 ea | S/S | 76.2 OD by 3.175 thickness | 3 OD by 0.125 thickness |
| (3) O-ring, Parker No. 11-227 | 2 | Buna-N | 60.325 by 53.975 by 3.175 | 2-3/8 OD by 2-1/8 ID by 1/8 |
| (4) Tube, HX inlet and outlet | 2 | S/S | 9.525 OD by 0.889 wall | 3/8 OD by 0.035 wall |
| (5) Elbow, Streamline No. W 2011 | 1 | Copper | 6.35 by 9.525 | 1/4 by 3/8 tube |
| (6) Tube, HX (hard) | 1 | Copper | 6.35 OD by 0.889 wall | 1/4 OD by 0.035 wall |
| (7) Fins, HX (24 oz half hard) | 4 | Copper | 431.8 Length by 21.43 width by 0.889 thickness | 17 Length by 27/32 width by 0.035 thickness |
| (8) Reducer, Swagelok No. 200-R-6 | 1 | Brass | 9.525 by 3.175 | 3/8 by 1/8 |
| (9) Thermocouple W/S/S sheath | 1 | C/A | 3.175 OD sheath | 1/8 OD |
| (10) Tube, silica-gel chamber | 1 | Brass | 50.8 OD by 0.889 width by 431.8 length | 2 OD by 0.035 width by 17 length |
| (11) Tube, heat-exchange jacket | 1 | S/S | 57.15 OD by 0.889 width by 431.8 length | 2-1/4 OD by 0.035 width by 17 length |
| (12) Elbow, Streamline No. W2003 | 1 | Copper | 6.35 by 6.35 | 1/4 by 1/4 tube |
| (13) Wire cloth, 16-mesh square weave | 2 | S/S | 0.508 wire diam | 0.020 wire diam |
| (14) Wire cloth, 200-mesh square weave | 2 | S/S | 0.053 wire diam | 0.0021 wire diam |

(A) Silica-gel chambers
(B) Coolant tube-in
(C) Coolant annulus-out

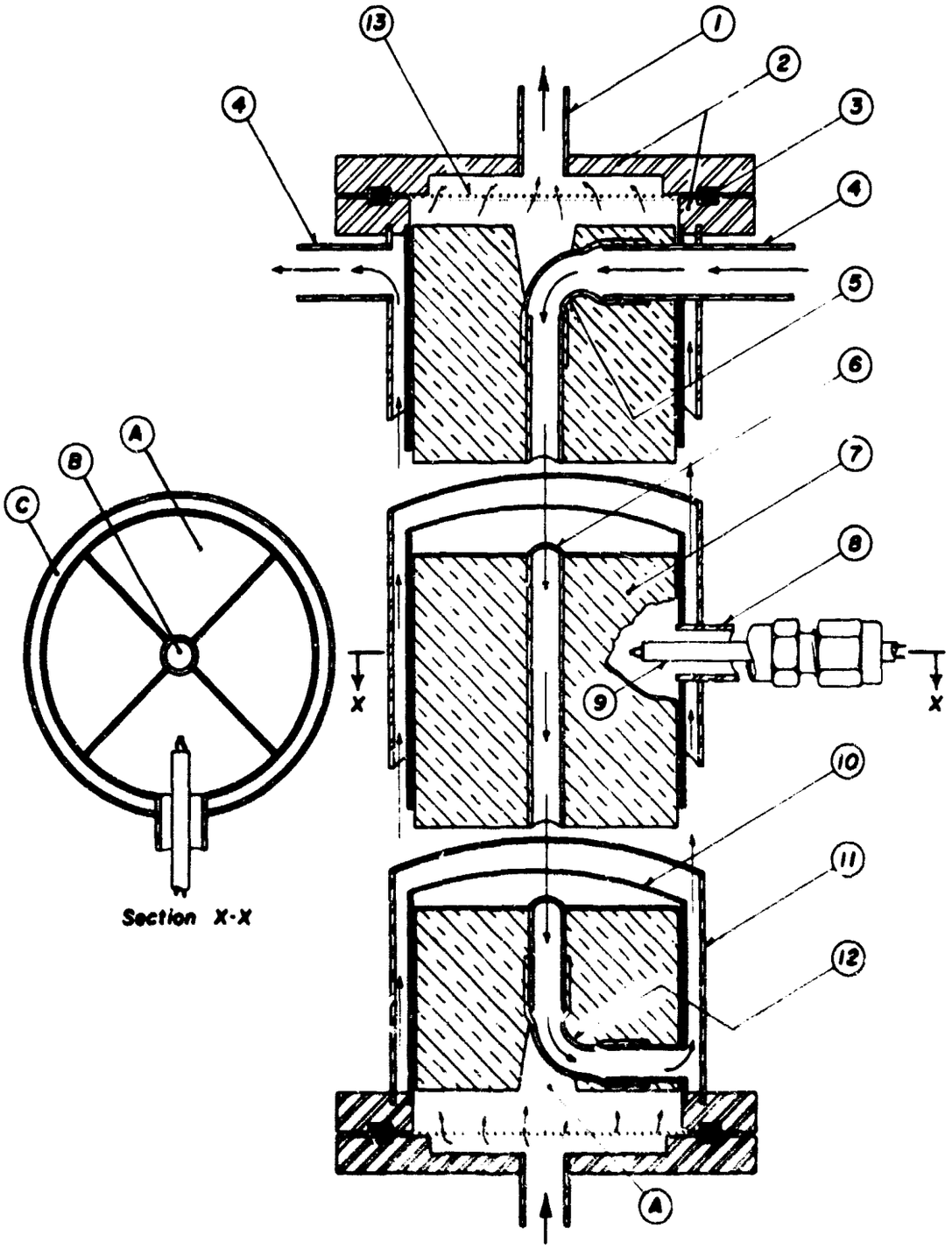


FIGURE 9. MODIFIED SILICA-GEL ADSORPTION COLUMN

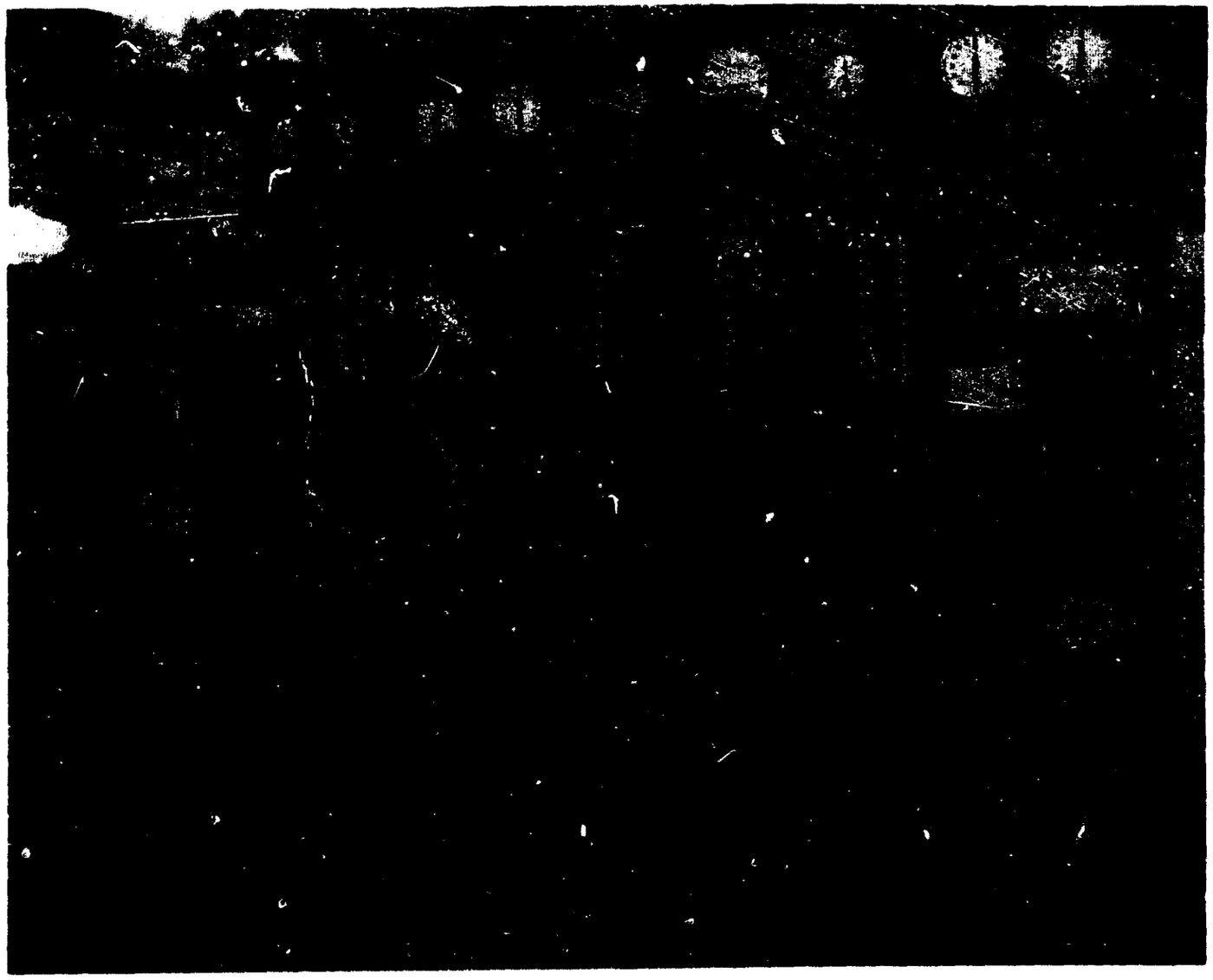

FIGURE 10. FRONT VIEW OF LABORATORY-MODEL ASSEMBLY

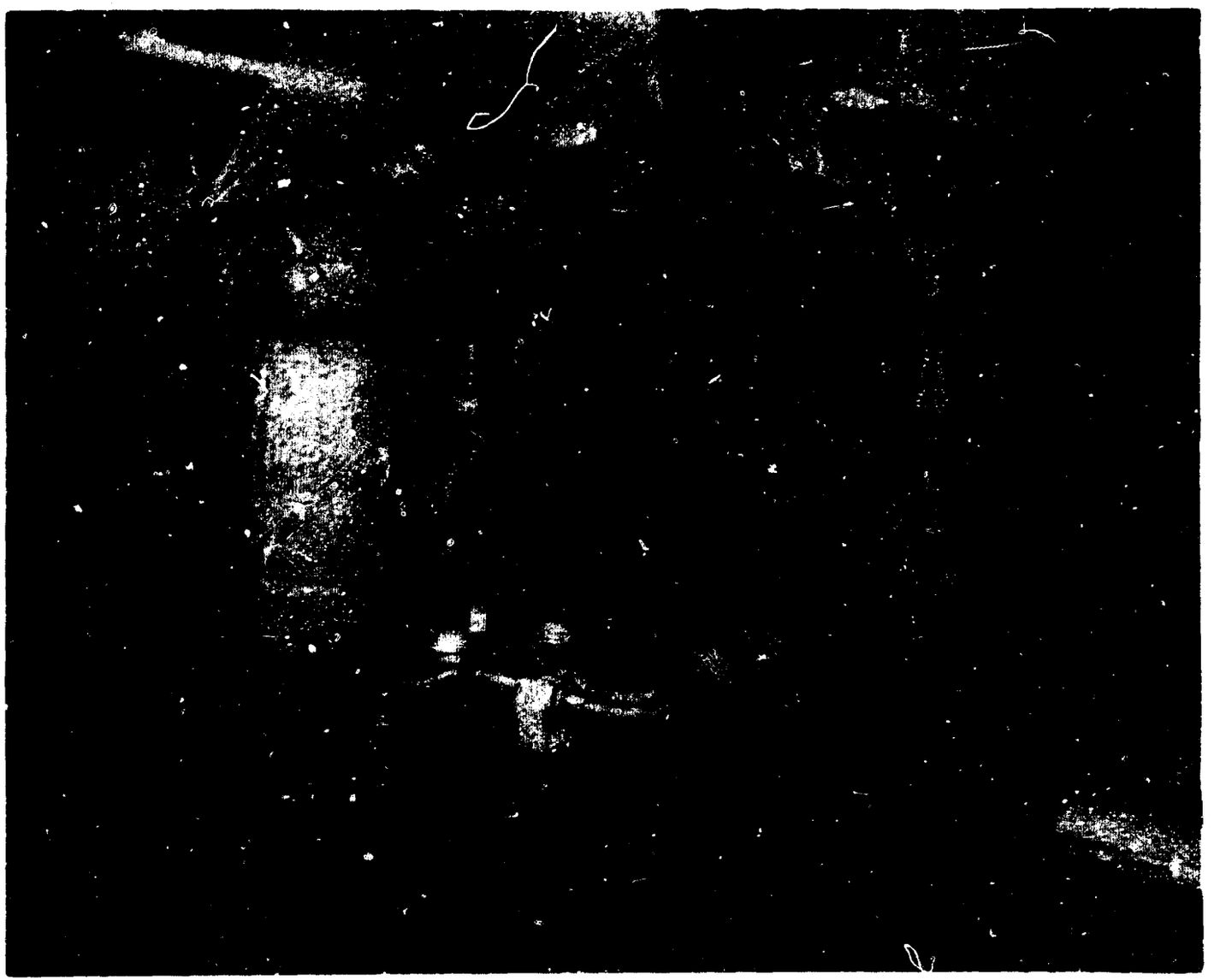

FIGURE 11. SIDE-REAR VIEW OF LABORATORY-MODEL ASSEMBLY

left, two reactors (one of them insulated) and the electrolysis unit located between the reactor units.

Preliminary checkout of the reactor units for leakage revealed cracks in one of the reactors. Difficulty was also encountered in sealing the "Conoseal" joints using a stainless steel gasket supplied with the equipment. After repeated failure with new gaskets, leakage was stopped by replacing the gasket with a ring-shaped gasket fabricated of copper. The differential-pressure gages also showed substantial leakage and had to be disconnected entirely from the reactor unit.

## Water Electrolysis

The 1/2-man, matrix-type, Pd-25Ag electrolysis unit, which was designed and constructed for the integrated laboratory-model system, is shown in Figure 12. Assembly parts of the unit are shown and described in Figures 13 through 18. The unit was designed to operate on a 28-volt d-c power source at a nominal current of 4.6 amperes and a current density of 37 ma/cm$^2$ at electrolyte temperatures between 70 and 75 C. Under these conditions and with the electrodes connected in series, each of 14 individual cells, which constitute the unit, would operate at an estimated cell voltage of 2.0 volts. The power requirement for the electrolytic production of oxygen at a nominal rate of 453 g/day was estimated as 127 watts. The fixed weight and volume of the unit, fully activated, were found to be 1.32 kg and 1,290 cm$^3$, respectively. Assuming a power penalty of 136 g/watt, the total weight penalty of the unit was estimated as 37.2 kg/man, which compares favorably with other water-electrolysis units.

Figure 13 is a photograph showing a layout of the parts that form a cell: stainless steel hydrogen-gas header with end caps, two platinum-rod current conductors, Teflon header plate, Teflon cathode tube receptical, microporous polyvinylchloride (PVC) matrix, 80-mesh Pt-10Rh anode screen, and twenty 1.6-mm OD by 0.076-mm wall by 13.5 cm long Pd-25Ag cathode tubes. The cell assembly minus matrix and anode screen is shown in Figure 14. A completed cell, impregnated with electrolyte and ready for stacking is shown in Figure 15. The void space between cathode tubes are filled with chemically pure grade calcium oxide (CaO) powder. Cells are stacked into a stainless steel container that is fitted with a mitered Teflon upper cell baffle and a slotted Teflon lower cell rack to position and hold the cells in place. These assembly parts with two Teflon side liners (to proved an all-Teflon enclosure for the cells) are shown in Figure 16.

Assembly of the unit is accomplished by inserting the cells through the right side opening of the metal container (Figure 16) and positioning the tube receptical into its corresponding slot of the lower cell rack. A Teflon baffle, designed to apply a slight positive contact pressure on the anode screen, is positioned between each cell. The baffle is milled (right-angle cross milled) so as to keep the cathode tubes aligned, provide for a 0.98-mm vapor space above the matrix, and provide for an even distribution of the vapor over the entire surface of the matrix. An oblique view of several baffles sandwiched between the two baffle end plates is given in Figure 17. In the photograph, spacers were used between the baffles to illustrate the vapor channels.

The stacking arrangement of the cells and oxygen baffles can be seen in the photograph of the completed unit shown in Figure 12. The amphenol plug, which can also be

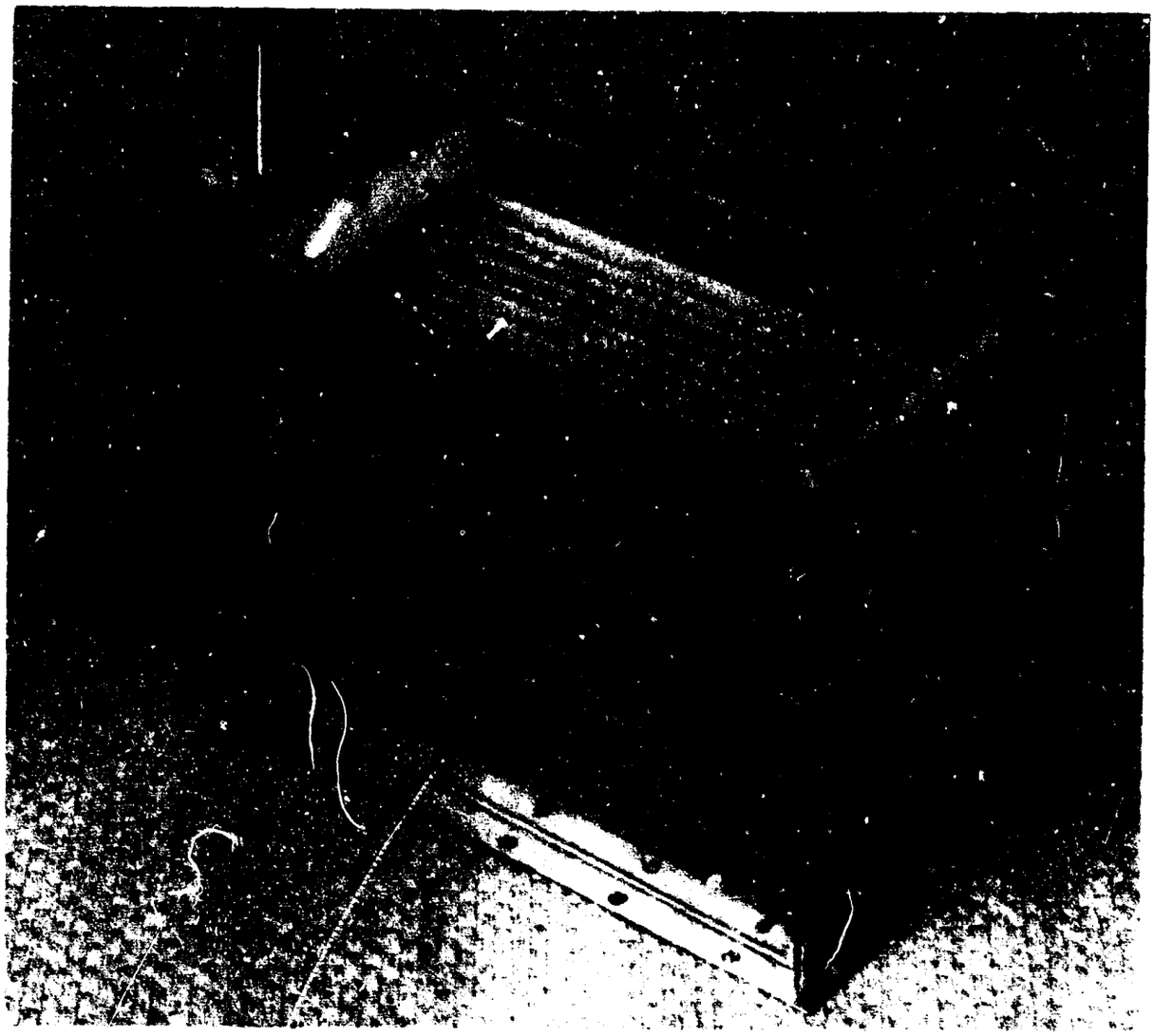

FIGURE 12. VAPOR-FED Pd-25Ag ELECTROLYSIS UNIT

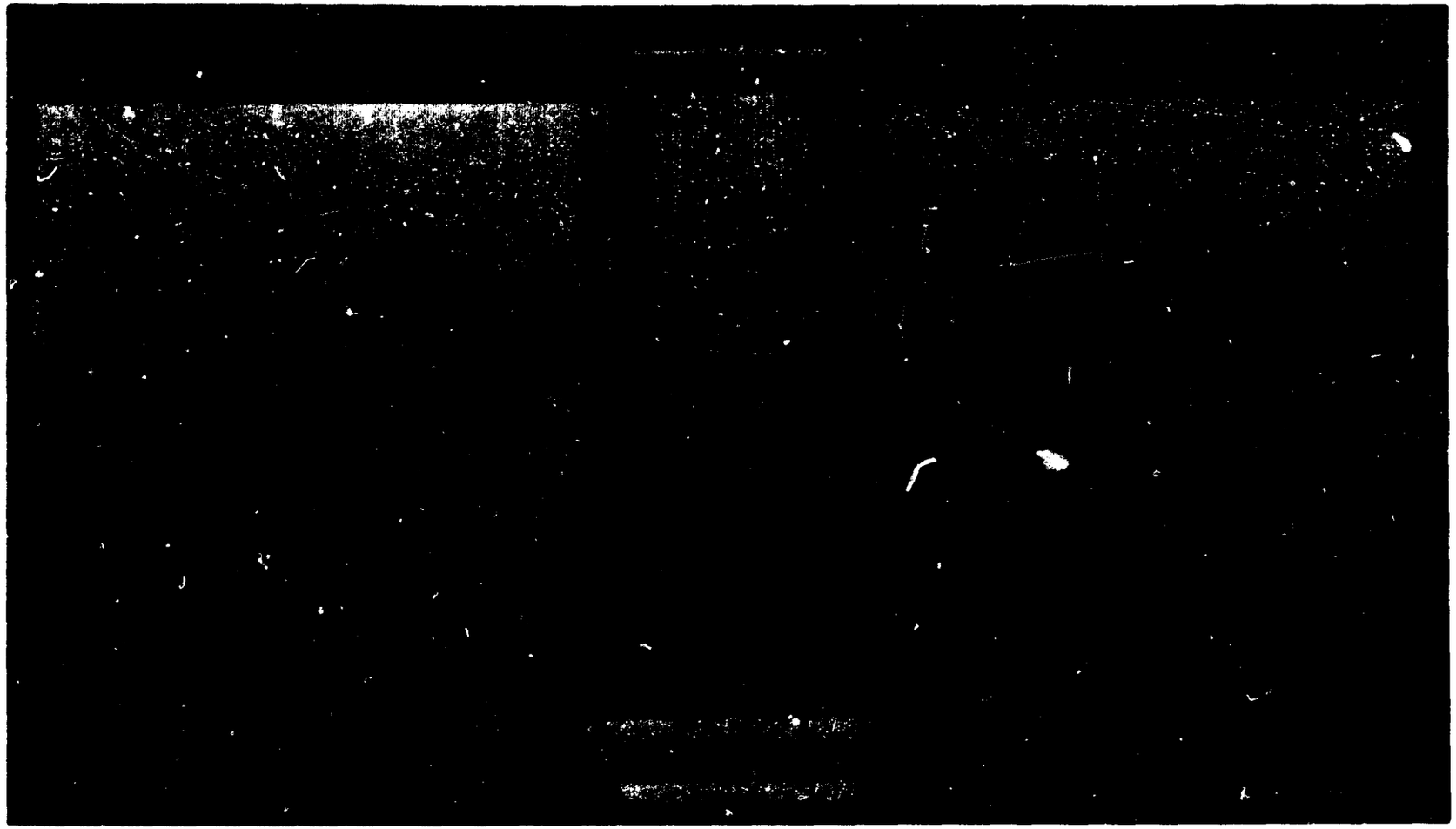

FIGURE 13. LAYOUT OF PARTS THAT FORM A SINGLE CELL OF THE ELECTROLYSIS UNIT

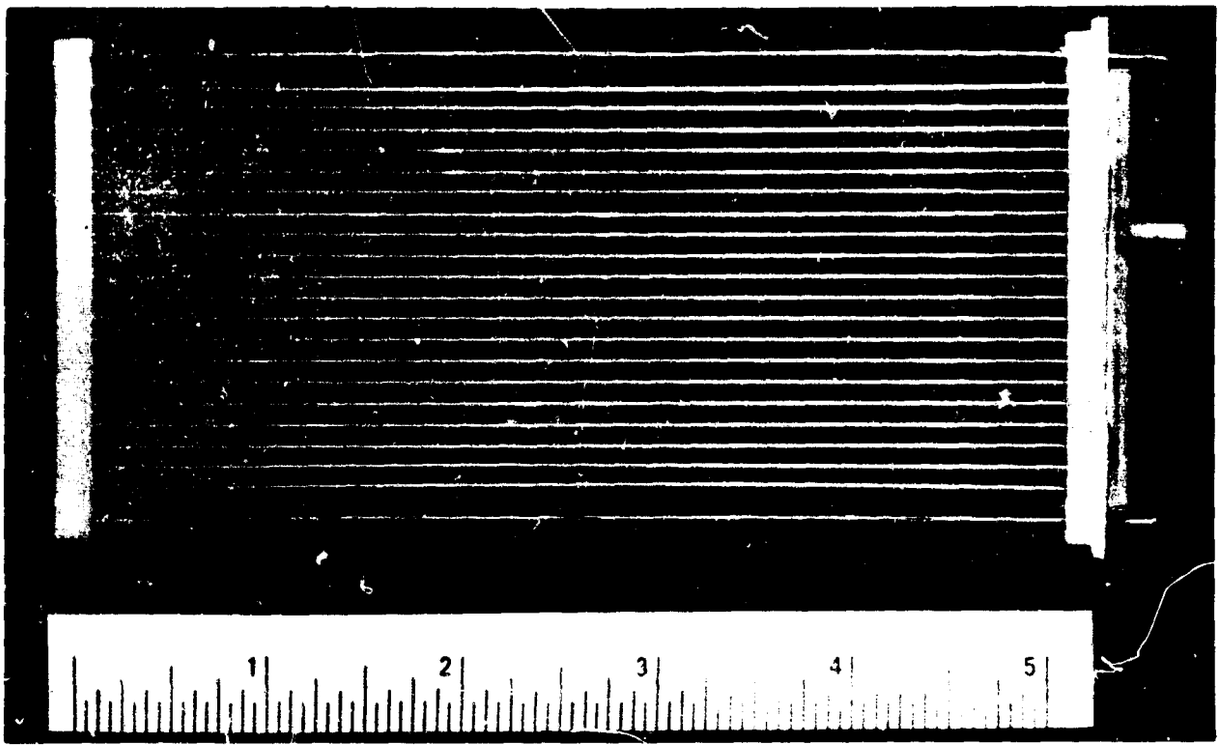


FIGURE 14. AN ASSEMBLED CELL MINUS MATRIX AND ANODE SCREEN

FIGURE 15 A COMPLETED CELL

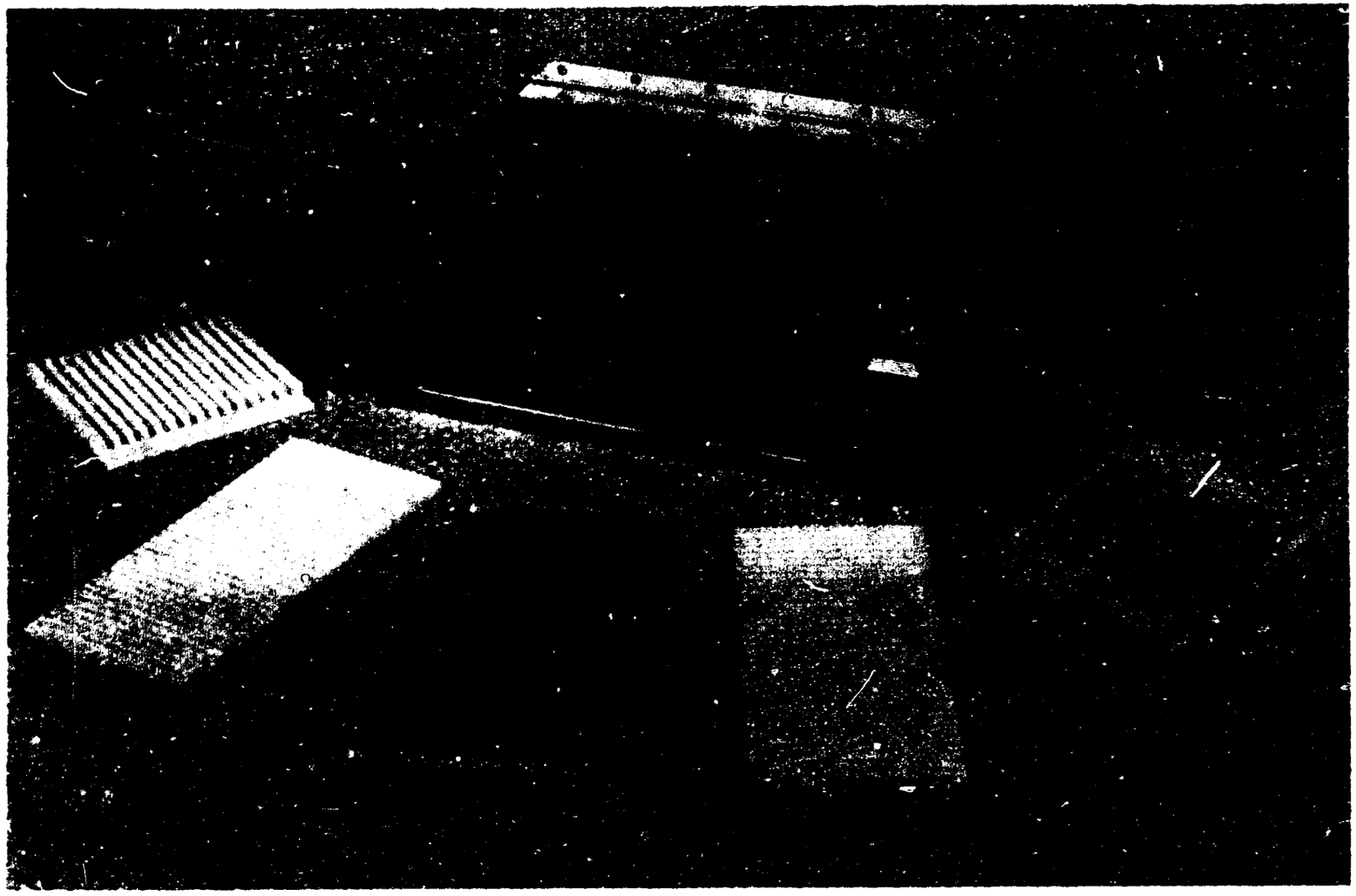

FIGURE 16. DISPLAY OF COMPONENTS OF THE ELECTROLYSIS UNIT

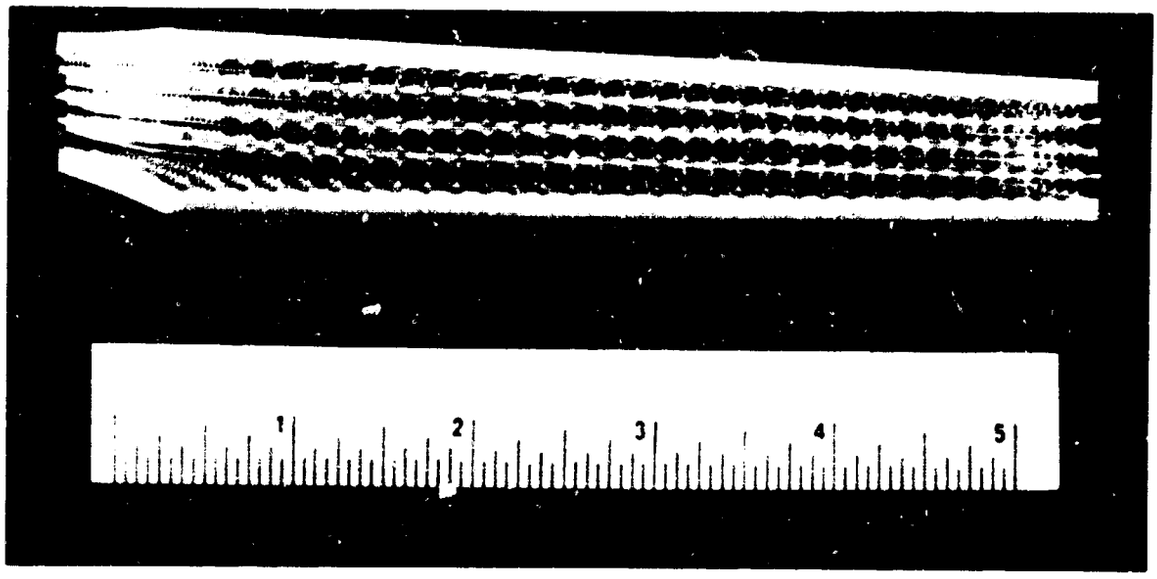


FIGURE 17. SEVERAL TEFLON BAFFLES STACKED TOGETHER TO SHOW VAPOR CHANNELS

seen in Figure 12, is electrically connected to measure the voltage of each cell and temperature of the stack (electrolyte) at three points, using small-gage Chromel-Alumel thermocouples positioned on the inside of a cathode tube. Electrical power connection to the unit (two banana-type jacks) can be seen in Figure 18, which is a photograph of the completed unit with ducting attached and ready for installation into the oxygen loop. The latter assembly is shown in Figure 19. The flowsheet of the oxygen loop is shown in Figure 2 given previously.

The oxygen loop, rectangular in shape, was constructed of a 3-inch stainless steel tubing (7.35-cm OD by 0.089-cm wall) and measures 34 cm in width and 64 cm in height. The loop contains the electrolysis unit (E), a blower (B-3) for recirculating oxygen, a detecting element for hydrogen ($H_2$-D/I), a humidity-sensing element (H-I/R), and a water-to-gas, finned-tube heat exchanger (HX-3). Sight glasses were provided at three corners of the loop to detect condensation of water.

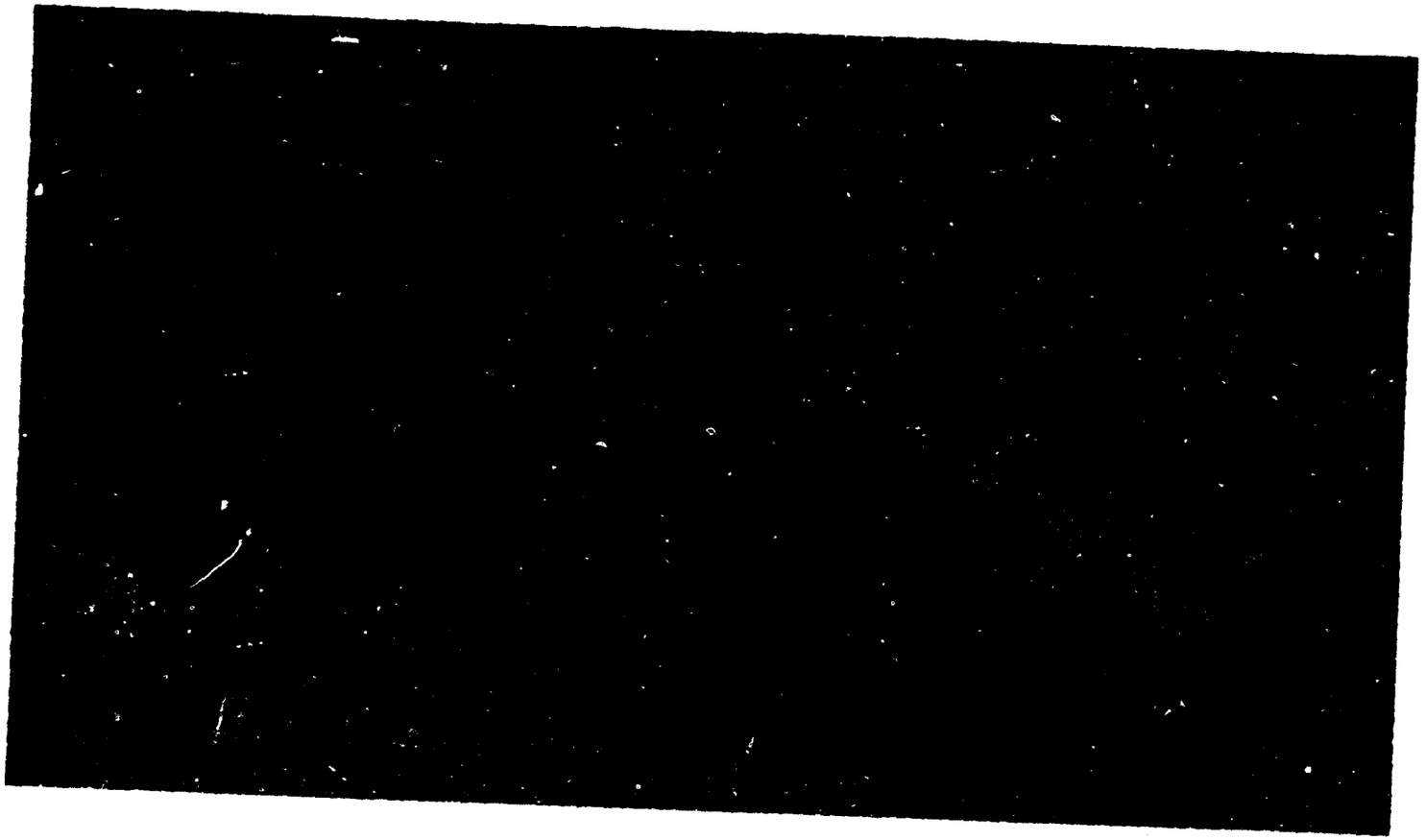

FIGURE 18. ELECTROLYSIS UNIT READY FOR INSTALLATION INTO OXYGEN LOOP

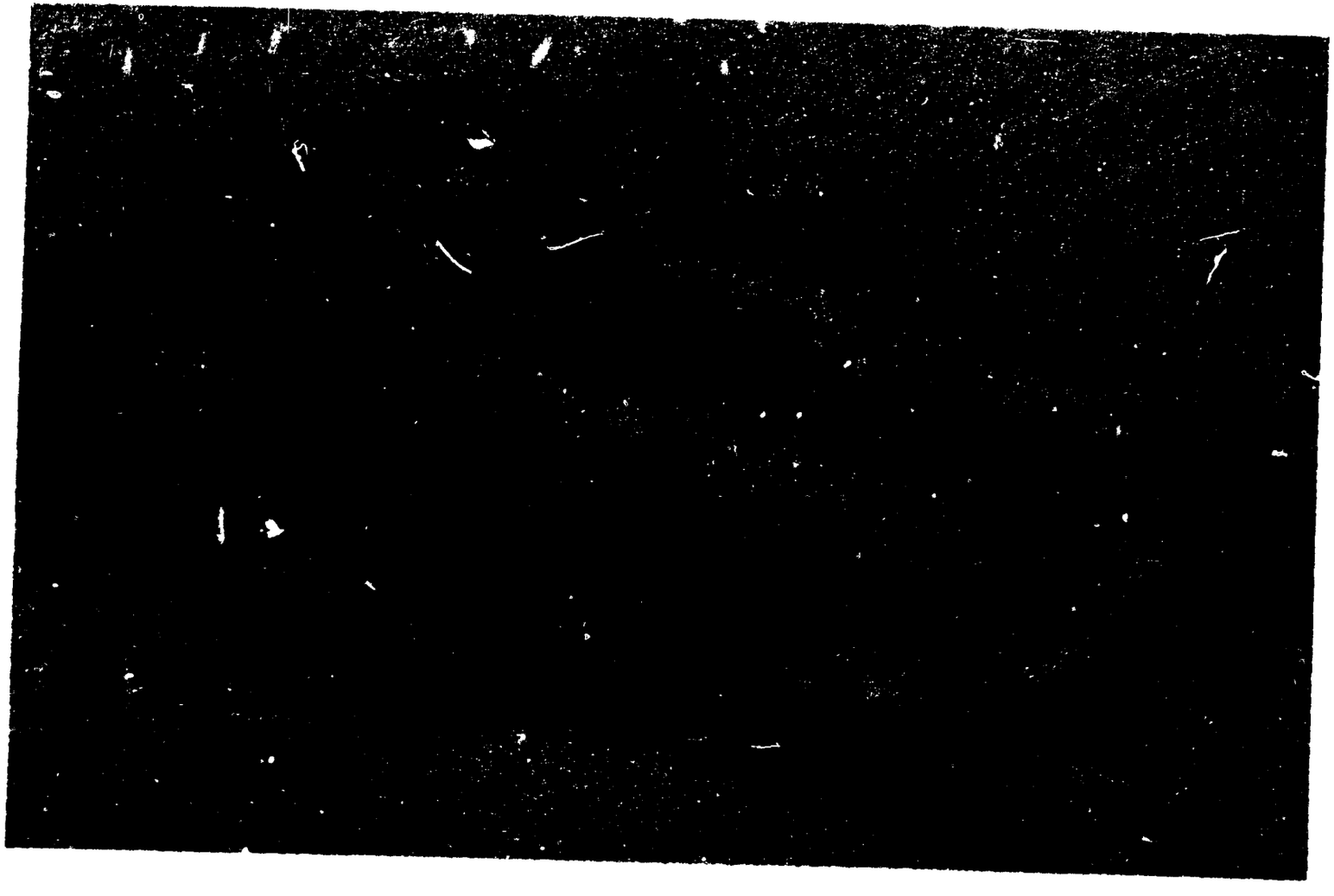

FIGURE 19. ELECTROLYSIS UNIT IN OXYGEN LOOP

## SECTION V

## OPERATION OF LABORATORY - MODEL SYSTEM

Most of the testing program was concerned with operation of the $CO_2$ reduction unit. The initial check out of the PdAg electrolysis unit by itself was unsuccessful due to a number of start-up problems. Attempts were made to disassemble and reconstruct the unit, but the task proved to be time-consuming, and, therefore, a decision was made to replace the unit with another matrix-type electrolysis unit with a phosphoric acid electrolyte to carry out testing of the integrated system.

### Operational Check-Out of PdAg Electrolysis Unit

Due to spacing problems caused by the incompressibility of the matrix and anode screen, two of the 14 cells assembled for the unit were omitted in the final fabrication. In addition, after fabricating the unit, three of the remaining 12 cells were shorted. The faulty cells were, therefore, electrically bypassed in order that a subsequent test could be performed with the remaining nine cells. The testing was carried out with the electrolysis unit separated from the Bosch reactor subsystem, and several problems were encountered in the start-up. These problems were related to leakage of gas in the oxygen loop, inefficient transmission of hydrogen, and apparently poor absorption of water vapor in the electrolyte-impregnated matrix. The attempt to operate the unit at the design current density was unsuccessful.

In the experimental run, nitrogen gas was circulated through the loop to provide vapor feed and temperature control for the electrolysis unit. The temperature control was supplied by heating the circulating gases by means of the heat exchanger to 65 C (146 F). Moisture to the gas stream was supplied in small increments as liquid water as required to maintain an inlet vapor pressure of about 31 mm Hg. At these inlet conditions and without electrolysis, the electrolyte was expected to approach a concentration of about 46 percent. After 2 hours of matrix conditioning, 28 volts (3.1 volts/cell) was applied to the unit. The corresponding unit current initially measured 90 ma and slowly decreased (2 minutes) to 50 ma after which the applied voltage was removed. The electrolyte was not yet sufficiently humidified to support electrolysis. The electrolyte had solidified during fabrication and storage of the cells, which was carried out in a glovebox purged with dry nitrogen.

The inlet partial pressure of the gas stream was subsequently increased to about 36 mm Hg, which corresponds to an electrolyte concentration of about 44 percent at the 64 C inlet temperature. After another 2 hours of matrix conditioning at these conditions, 20 volts (2.2 volts/cell average) was applied to the unit, and the current response indicating polarization was the same, this time initially measuring about 60 ma and slowly decreasing to 20 ma.

Testing of the unit was continued for an additional 16 hours at the inlet conditions of 64 C, 36 mm Hg vapor pressure, and an estimated 320 liters/min in gas flow. Periodically, electrolysis was attempted with the application of 20 volts. However, current response was always poor. Best results were obtained just prior to termination of testing

when a current of 400 ma (0.33 ma/cm$^2$ current density) was maintained for about 45 minutes. Due to the polarized conditions, however, $H_2$ transmission efficiency was low (40 percent), and buildup of hydrogen in the loop to an explosive mixture necessitated termination of electrolysis.

Failure of the electrolysis unit to perform satisfactorily is believed to be due to a partially solidified electrolyte that, as the above results indicate, was inordinately slow in establishing the desired saturation level. Possibly, the calcium oxide support may have had a bearing on the vapor-absorption problem.

Following the initial operational check out, the electrolysis unit was completely disassembled to recover and clean the electrodes. The task of reconstructing the unit for further testing appeared to be time-consuming and, therefore, was abandoned in favor of replacing the entire unit with an available matrix-type water vapor electrolysis unit with phosphoric acid electrolyte.

## Silica-Gel Adsorbers

The silica-gel column shown in Figure 9 was employed for removal of water from the reactor recycle gas. Moisture content of the recycle gas at the adsorber outlet was monitored continuously to detect breakthrough of the column. Ice water was circulated through the column as coolant during the sorption period. When the absorber started to break through, $CO_2$ feed to the reactor unit was shut off and $H_2$ feed was continued for 5 minutes to reduce $CO_2$ concentration in the recycle gas to 0.4 percent.

After the adsorber saturated with water was taken off the reactor loop, the recycle gas in the adsorber was removed by evacuation for 30 seconds with a vacuum pump. Desorption was carried out using cylinder nitrogen as a carrier gas and at a bed temperature of 94 C using steam. The carrier gas was passed through a gas-dispersion tube containing 0.01N NaOH and $BaCl_2$ in solution to trap $CO_2$.

A total of 311 g of water was recovered. Analysis of the solution in the trap showed the total amount of $CO_2$ evolved from the adsorber to be 0.238 millimoles, which is equivalent to $3.36 \times 10^{-5}$ g $CO_2$/g $H_2O$. On this basis, 22.2 percent of the NaOH electrolyte in the matrix-type PdAg electrolysis unit would be converted to $Na_2CO_3$ by $CO_2$ carried over from the $CO_2$ reduction unit in 1 year of operation. The low value indicates that the procedure adopted for $CO_2$ removal is adequate.

The small amount of $CO_2$ might be removed ahead of an alkaline electrolysis unit. Although removal of $CO_2$ is not needed for an acid electrolysis unit from the standpoint of electrolyte degradation, removal of $CO_2$ and CO from the recycle gas would be desirable to recover oxygen from the waste gas to be vented by evacuation.

Typical performance data of the adsorption column in the reactor loop are summarized in Table II. Results indicate that silica-gel adsorbers have a high sorption capacity and are capable of efficiently removing water from the recycle-gas stream.

Repeated use of the adsorbers over five or more cycles of sorption and desorption revealed degradation by breakup of the regular-grade silica gel. Apparently the degradation was caused by abrupt increase in humidity during desorption. The regular-grade

gel suffers physical decrepitation under conditions of extremely high humidity, whereas the buffer-grade gel is unaffected. It has been found that molecular-sieve pellets (Type 13X) should be a satisfactory replacement for the regular-grade silica gel from degradation standpoint. The two materials have approximately the same bulk density (0.64 g/cm$^3$). Under identical operating conditions, the molecular sieve was found to have about 40 percent lower sorption capacity than the regular-grade silica gel. On this basis, the sorption capacity of a system consisting of 50 percent by volume of buffer-grade silica gel in the gas-inlet side and 50 percent by volume of molecular sieve 13X in the gas-outlet side will be 0.52 g $H_2O$/g adsorbent, which is still high compared with a value of 0.214 assumed in the predesign analysis.

TABLE II. SILICA-GEL-ADSORBER PERFORMANCE DATA

| | | |
|---|---|---|
| Weight of Silica Gel: | Buffer Grade, g | 153 |
| | Regular Grade, g | 271 |
| Recycle Gas Flow, liters/min/liter of gel, STP | | 15.5 |
| Inlet Dew Point, C | | 31 |
| Outlet Dew Point, C | | Below -11 |
| Water-Removal Rate: | g/hr | 26.5 |
| | g/hr/g of gel | 0.0625 |
| Coolant: | Temperature, C | 7.2 |
| | Flow Rate, l/min | 7 |
| Bed Temperature, C | | 10.0 |
| Upper Limit of Sorption Capacity, g $H_2O$/g gel | | 0.73 |

Switching of columns in the reactor loop required less than 10 minutes between the time $CO_2$ feed was shut off to the first column and the time steady-state operation was attained with the second column. During column switching, the $CO_2$ feed would be shut off for 5 minutes, which would penalize the $CO_2$-storage tank for a small additional capacity for 5.3 liters, STP, of $CO_2$ in a 3-man system.

## Carbon-Dioxide Reduction

The predesign analysis of the batch process showed four major parameters contributing to weight and power penalties associated with reduction of carbon dioxide. These parameters are listed in Table III.

TABLE III. WEIGHT AND POWER PENALTIES FOR BATCH-PROCESS REACTOR

| Item | Fixed Weight, kg | Power, watt | Equivalent Weight, kg |
|---|---|---|---|
| Heat loss by conduction | -- | 148.1 | 20.1 |
| Sensible-heat loss of recycle gas | -- | 169.5 | 23.1 |
| Expendable catalyst | 29.8 | -- | -- |
| Expendable catalyst canisters | 23.8 | -- | -- |

Heat loss from the reactor unit by conduction through insulation is determined by the reactor temperature. If the temperature is reduced by 50 C from the design level of 648 C at the reactor wall, the heat loss will be reduced by 12.2 watts or by 1.7 kg of equivalent weight penalty. Similarly, a 10 percent reduction in recycle rate will reduce the sensible-heat loss by 17 watts or by 2.3 kg of equivalent weight penalty. The weight of expendable catalyst was obtained on the basis of a carbon-catalyst ratio of 10 in carbon deposit. Prior studies have shown that the ratio could be significantly improved. If the ratio is increased to 20, the catalyst requirement will be reduced by 50 percent or by 14.9 kg. The fixed weight of expendable catalyst canisters is inversely proportional to the packing density of carbon deposit, and the value given in the table was obtained by assuming a carbon density of 0.45 g/cm$^3$. The assumption appeared to be reasonable based upon the density of amorphous carbon at 1.8 g/cm$^3$ but still remained to be proven in practice. From these considerations, the test program was planned and carried out to attain (1) higher carbon-catalyst ratio and (2) dense packing of carbon deposit.

Tests results from reactor operation are summarized in Table IV. The reactor unit was operated over a cumulative period of about 300 hours.

## Check-Out Experiment

The reactor unit, shown in Figure 23, was tested in a check out experiment using a premixed feed of hydrogen and carbon dioxide in approximately 2 to 1 ratio, but slightly deficient in hydrogen. The reactor was charged with 66.6 g steel wool (0000 gage) as catalyst. The steel wool as received was cleaned by washing in succession with toluene and acetone and by drying in a vacuum oven for 2 hours at 150 C. The catalyst was activated by heating under circulating hydrogen for a period of 21 hours at reactor temperature of 610 C measured at the outlet of the reactor.

Immediately following catalyst activation the heaters and the recycle-gas pump were shut down briefly to evacuate the unit and restarted to carry out reduction experiments. During the first day of testing, the inside heater and the wall heater were maintained at 225 watts and 100 watts, respectively. The reaction rate fluctuated

TABLE IV SUMMARY OF TEST RESULTS FROM OPERATION OF CARBON MONOXIDE-REDUCTION UNIT

| Test Series | Catalyst[a] Charge, g | Total Operating Time, hr | Pressure[b] Drop, mm Hg | Carbon-Catalyst Ratio, g/g | Carbon Packing Density,[c] g/cm$^3$ | Remarks |
|---|---|---|---|---|---|---|
| [illegible] | [illegible] | 24 | 72 | 1.5 | 0.07 | Operational checkout experiment. |
| [illegible] | [illegible] | 33 | 256 | 15.[illegible] | 0.13 | Catalyst charge reduced to increase carbon-catalyst ratio. |
| [illegible] | [illegible] | [illegible] | 260 | 30.0 | 0.09 | Catalyst charge reduced to increase carbon-catalyst ratio. |
| [illegible] | [illegible] | [illegible] | 165 | 34.2 | 0.11 | Carbon blowdown technique checked out and found inoperative. Nickel screen inside reactor found degraded. Copper sheet inside reactor showed no carbon formation but became brittle. Phosphor-bronze screen showed no carbon formation and remained malleable. |
| [illegible] | | [illegible] | 15 | - | -- | Without catalyst, no appreciable reaction occurred. No carbon found inside catalyst canister. |
| [illegible] | [illegible] | - | | - | -- | Experiment terminated prematurely due to failure of outside wall heater. |
| [illegible] | [illegible] | [illegible] | [illegible] | - | -- | New wall heater installed. New catalyst canister fabricated from phosphor-bronze screen and radial gas-flow pattern used to increase carbon packing density. Experiment terminated prematurely due to low reaction rate. Poor gas-catalyst contact suspected. |
| [illegible] | [illegible] | [illegible] | [illegible] | | -- | Reactor-canister design modified, using brass and phosphor-bronze components to prevent undesirable carbon formation on component surface. Reaction rate dropped prematurely, indicating poor gas catalyst contact and/or catalyst poisoning. |
| [illegible] | [illegible] | [illegible] | [illegible] | [illegible] | 0.06 | Catalyst canister taken out and catalyst charged directly into inner reactor tube to permit vertical gas flow and efficient gas-catalyst contact. Reaction rate still dropped prematurely, indicating catalyst poisoning from brass and/or phosphor-bronze components. |
| [illegible] | [illegible] | [illegible] | 233 | 18.[illegible] | 0.21 | Inner reactor tube replaced with a smaller unit fabricated from copper and Monel screen to be used as catalyst canister. More than half of total carbon was found outside canister, indicating the reactor material to be highly catalytic. Monel screen appeared to be intact. |
| [illegible] | [illegible] | [illegible] | 351 | 24.2 | 0.36 | Catalyst charged into annular space between inner and outer reactor tubes and enclosed at top and bottom by Monel screens. Considerable amount of carbon found outside catalyst chamber below the bottom screen. |
| [illegible] | [illegible] | [illegible] | 246 | 34.2 | 0.21 | Integrated operation of reactor unit and $P_2O_5$ water-electrolysis unit |
| [illegible] | 20.0 | [illegible] | 258 | 20.0 | 0.47 | New catalyst-canister and inner reactor tube constructed using Monel components. Inside wall of reactor plated with copper to prevent undesirable carbon formation. Direction of gas flow through reactor reversed. Test carried out continuously. High packing density attained. Monel screen used in canister showed severe degradation. Copper-plated surface showed no carbon deposition. |

[a] Steel wool, 0000 gage.
[b] Measured across inlet and outlet of recycle-gas pump.
[c] Calculated on the basis of total working volume of catalyst chamber.

considerably during the first 4 hours of testing due to a trial-and-error method of control, which involved adjustment of feed rates of the premixed gas and makeup hydrogen to prevent an excessive buildup of reactor pressure. The in-line $CO_2$ analyzer had not been installed and therefore was not available for controlling reactor operation. As the operator gained experience in controlling the reactor under manual mode, reactor performance improved considerably.

Results from the second day of operation are shown in Figures 20 and 21. The reaction rate, expressed in terms of the feed rate of hydrogen, was high initially at relatively low temperatures. Gas analysis showed a rapid buildup of methane in the recycle gas during this period, which indicated a Sabatier-type reaction favored by low temperature. The reaction rate fell sharply during the first hour and remained relatively constant during the next hour of operation. The rate increased with rising reactor temperature up to 3.6 hours of operation. At this point the reaction rate was 470 $cm^3H_2$/min, STP, at 600 C and a recycle rate of 9.0 liters/min, STP. Following an increase of recycle rate to 15.2 liters/min, STP, the reaction rate and the temperature increased to 630 $cm^3H_2$/min, STP, and 630 C, respectively. The test was terminated when the silica-gel column in the recycle loop broke through.

The test established that the unit can be operated at well above the design capacity of 1/2-man rate of 440 $cm^3H_2$/min under the operating conditions indicated. A total of 102 g of carbon was recovered from this test. A large portion of the steel-wool catalyst was recovered intact. The catalyst canister was stuck in the reactor and had to be broken up for removal. This was caused apparently by formation of carbon in the narrow clearance between the canister and the inner tube of the reactor. Deposits of carbon found on both canister and reactor-interior surfaces indicated that the stainless steel alloys (Type 302 and Type 347) used as materials of construction are catalytically active. These findings suggested modification of the canister in terms of design and materials of construction

## Catalyst Activation

Following the initial check-out experiment, tests were carried out to investigate the catalyst-activation problem with the objectives of (1) shortening the time required for activation and (2) activating the catalyst under a $CO_2$ atmosphere.

In Test 59-49, 5 g of the steel-wool catalyst in as-received state without any prior treatment was charged into the reactor. The unit was evacuated, filled with $CO_2$, and heated to 593 C. As soon as $H_2$ feed was turned on, the reactor pressure started to rise, which indicated no appreciable reaction. The unit was evacuated and filled with hydrogen. The catalyst was activated in $H_2$ atmosphere for 45 minutes at 593 C. Immediately following $H_2$ activation, $CO_2$ feed was started, and the reaction proceeded at a high rate (678 $cm^3H_2$/min, STP). The test result indicates that hydrogen activation is needed but requires less than 1 hour.

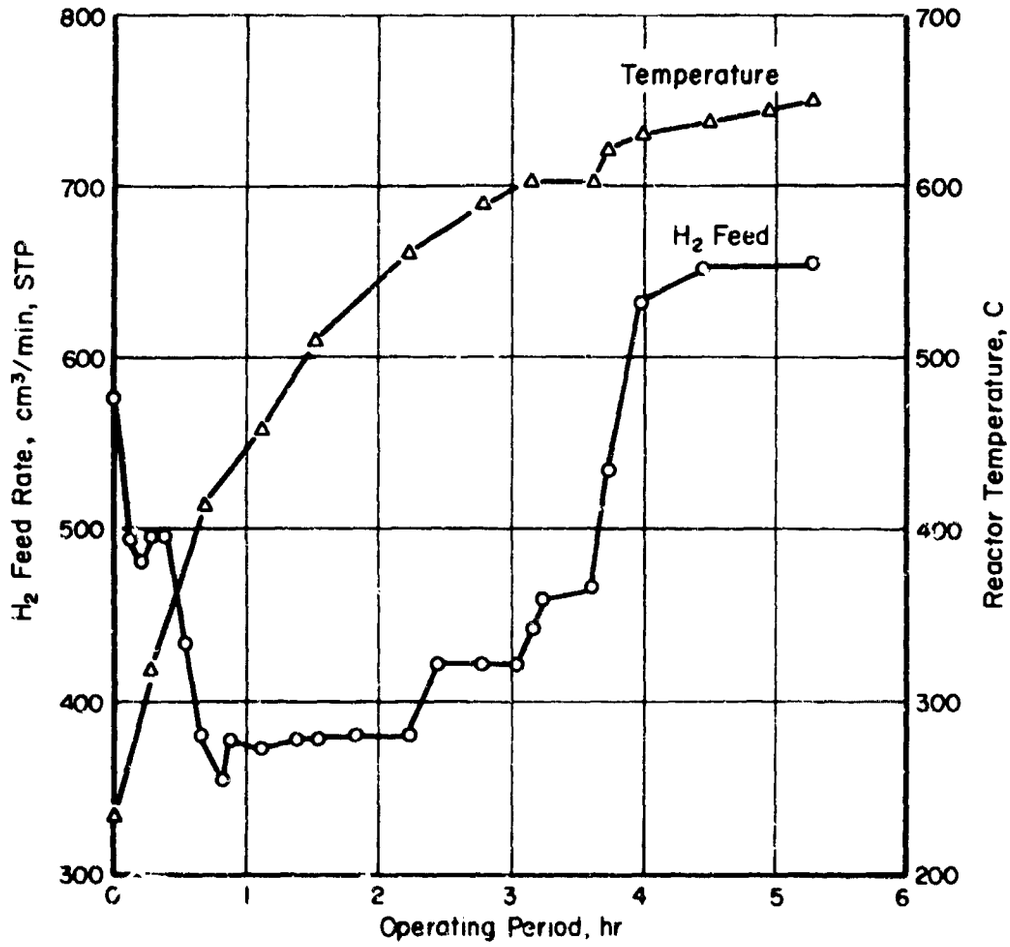


FIGURE 20. RATE OF CARBON DIOXIDE REDUCTION AND REACTOR TEMPERATURE

(Test 59-31)

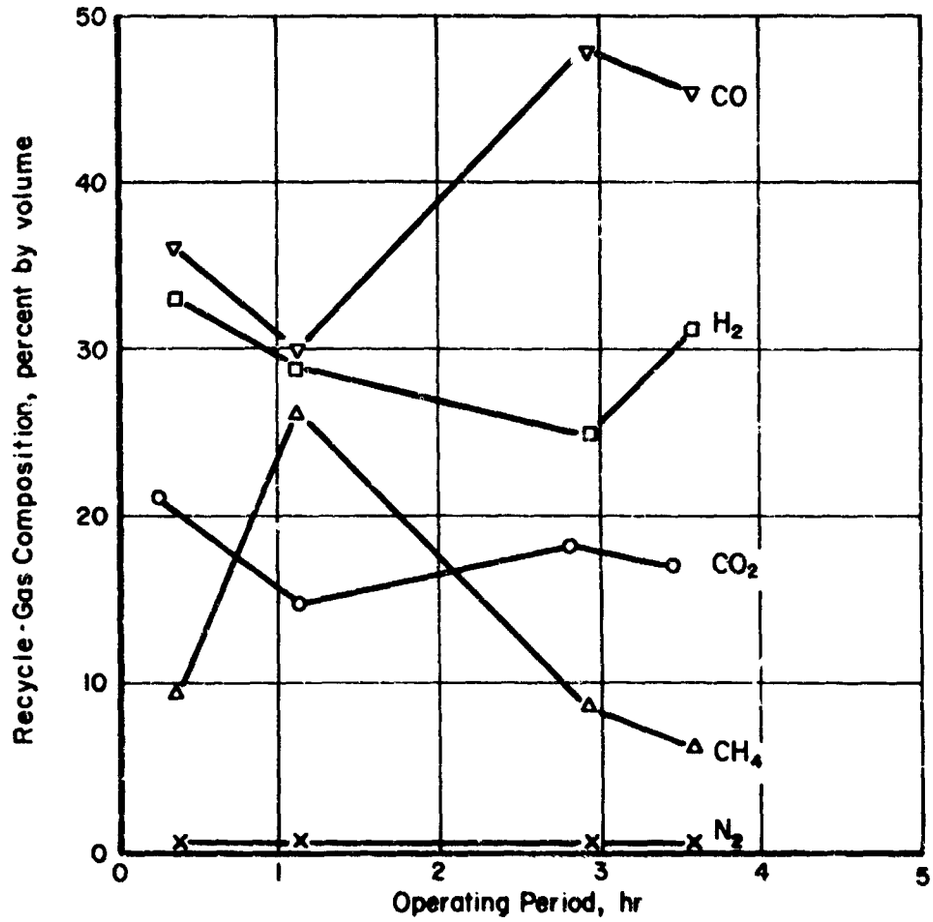


FIGURE 21. REACTOR-RECYCLE GAS COMPOSITION AT REACTOR INLET

(Test 59-31)

## Recycle Rate

Effect of recycle rate on the reduction rate was investigated in Test 89-13. A part of test data taken over a period of approximately 2 hours is shown in Figure 22. Operating conditions during this period were as follows:

| Recycle-Gas Composition at Reactor Outlet, mole percent | |
|---|---|
| $CO_2$ | 16 |
| CO | 42 |
| $CH_4$ | 12 |
| $H_2$ | 28 |
| $N_2$ | 2 |

| Temperatures, C | |
|---|---|
| At reactor outlet | 573 |
| Outside wall of reactor | 715 |

Test results show that the rate of reaction increases linearly with the recycle rate between 8 and 21 liters/min, STP. The two rates, however, are not directly proportional. The linear relationship between the two variables may be expressed as:

$$F = 185 + 31.4\,R,$$

where

$$F = \text{reaction rate in } cm^3 H_2/\text{min, STP}$$

$$R = \text{recycle rate in liters/min, STP}\ .$$

## Recycle-Gas Composition

The recycle-gas composition was found to be sensitive to changes in the controlled level of $CO_2$ concentration in the gas mixture and to changes in reaction temperature. In general, increase in $CO_2$ level raised the concentration of CO and lowered the concentration of $CH_4$, and vice versa. Higher reaction temperature was found to favor CO buildup and to lower $CH_4$ concentration. A part of data collected from Test 89-13 is shown in Figure 23, which shows the effect of lowering $CO_2$ level on gas composition. No significant change in the reaction rate resulted from lowering the $CO_2$ level from 16 to 7 percent. Test results also indicate that new steady-state conditions are attained in approximately 30 minutes after a change in $CO_2$ level is made. Additional experimental data obtained in Test 48-77 indicated that the reaction rate is independent of the $CO_2$ level between 6 and 10 percent, measured at reactor outlet, but is lowered significantly at 3 percent of $CO_2$. The task of reactor control is expected to be easy as far as recycle gas compositions are concerned, since the reaction rate is unaffected by composition changes over a wide range.

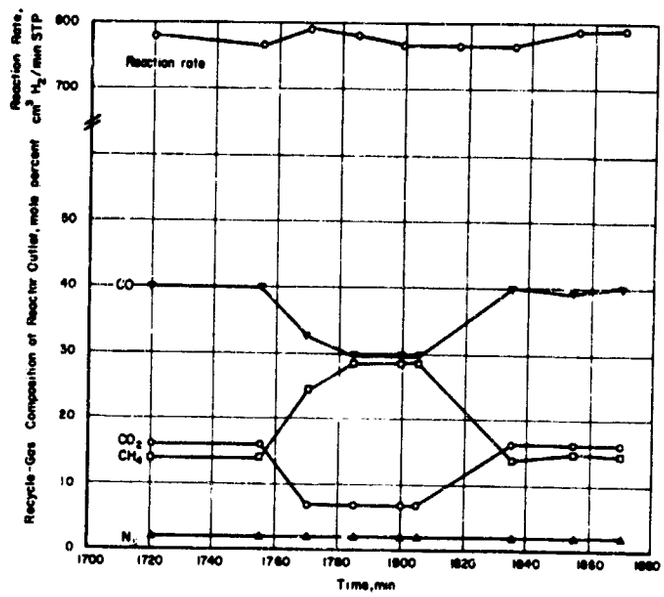


FIGURE 22. EFFECT OF RECYCLE RATE ON REACTION RATE

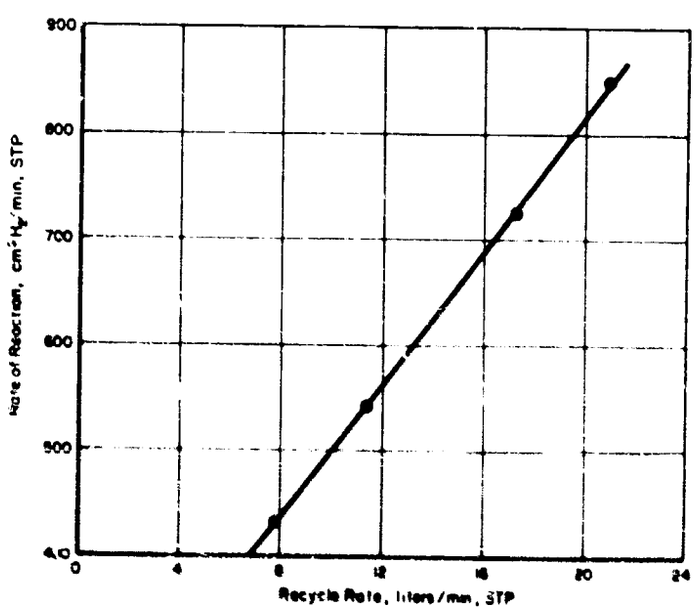


FIGURE 23. EFFECT OF $CO_2$ CONCENTRATION ON RECYCLE-GAS COMPOSITION AND REACTION RATE

## Reactor Temperature

Temperature measurements were made at the outside wall of the tubular section of the reactor and in the outlet gas. In Test 89-13, lowering the wall temperature by 71 C from 714 to 643 C accompanied by a decrease of 47 C in the outlet-gas temperature from 569 to 522 C resulted in a 10 percent reduction in the reaction rate from 885 to 795 $cm^3H_2$/min, STP. Taking an average of the wall and the gas temperature as the reaction temperature, the corresponding change in the reaction temperature would be from 642 to 583 C or a decrease of 59 C. Considering the magnitude of change, the effect of temperature on the reaction rate was found to be relatively small within above range.

## Catalyst Consumption

The problem of catalyst requirement was approached from the viewpoint, based upon prior research, that iron catalyst is consumed in the reaction and cannot be recovered for repeated use. The catalyst is to be treated, therefore, as an expendable item which adds to the total system weight.

Following the initial check-out test, in which 66.6 g of the steel-wool catalyst had been used, the amount of catalyst charge was reduced to 5 g in Test 59-49 to investigate the effect of the change on reaction rate and the ultimate carbon-iron ratio in the carbon product. The test was carried out in the original reactor-canister configuration shown previously in Figure 3. Experimental data are shown in Figures 24 and 25. The test was carried out in three periods, and the reactor was shut down overnight after each test period. The recycle rate decreased continuously as the test progressed due to buildup of carbon and increasing pressure drop in the reactor. A small portion of the recycle gas was continuously purged to stabilize buildup of nitrogen, which originated from commercial-grade feed gases. A total of 129.9 g of carbon was recovered from the test. Analysis of the product for iron obtained by a combustion method is given in Table V. A small amount of product containing a relatively large amount of unused steel-wool catalyst was recovered. In the remaining bulk of the product obtained, the carbon-to-iron ratio ranged between 23 and 51 with an overall value of 30, which is three times as high as the predesign estimate.

TABLE V. ANALYSIS OF CARBON FROM TEST 59-49

| Weight, g | Carbon-to-Iron Ratio, g | Remarks |
|---|---|---|
| 66.3 | 50.8 | Carbon removed from top part of canister on gas-inlet side. |
| 51.5 | 22.9 | Carbon removal from bottom part of canister on gas-outlet side. |
| 2.1 | 0.2 | Carbon containing large proportion of unused catalyst. |

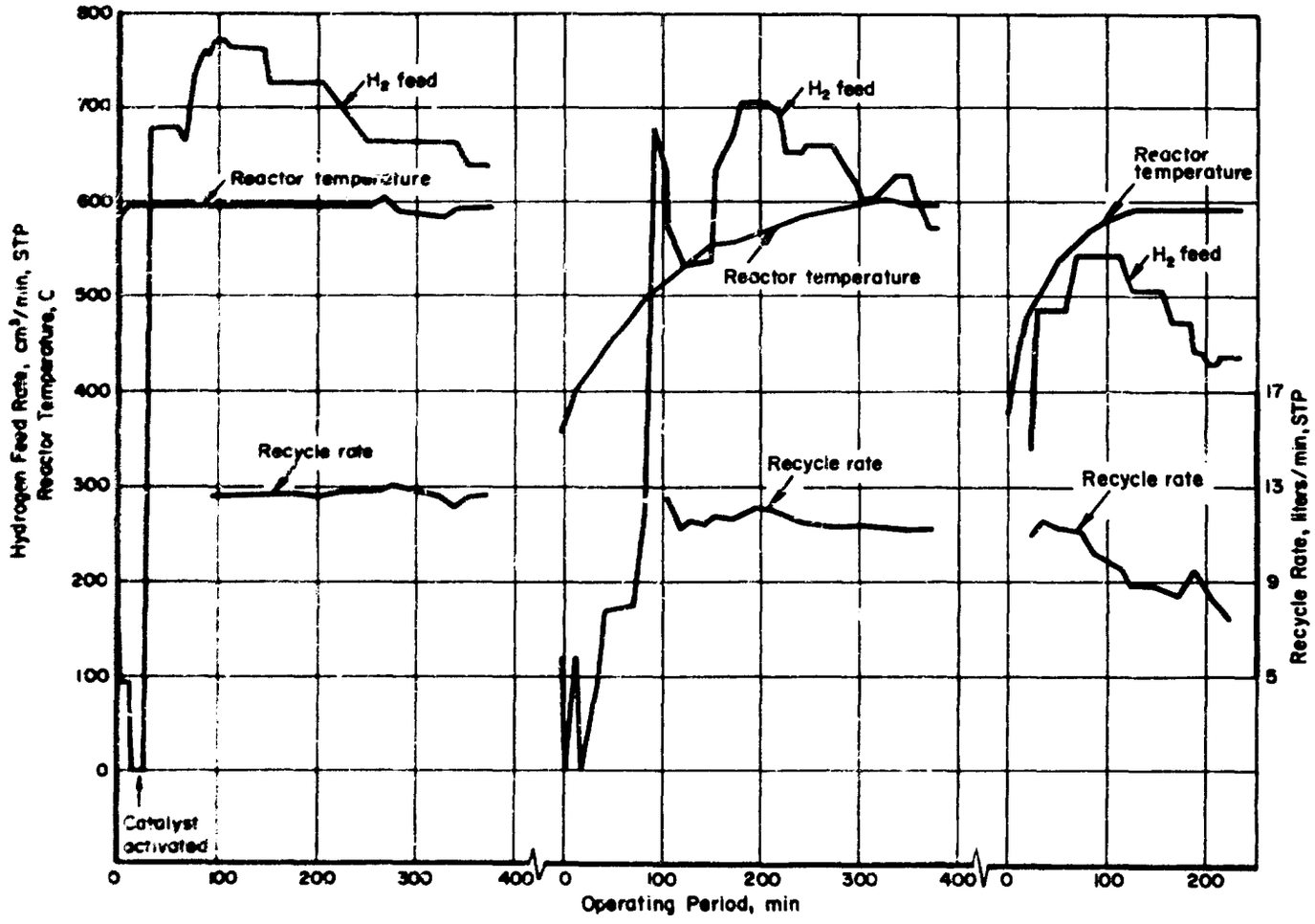


FIGURE 24. REDUCTION OF CARBON DIOXIDE

(Test 59-49)

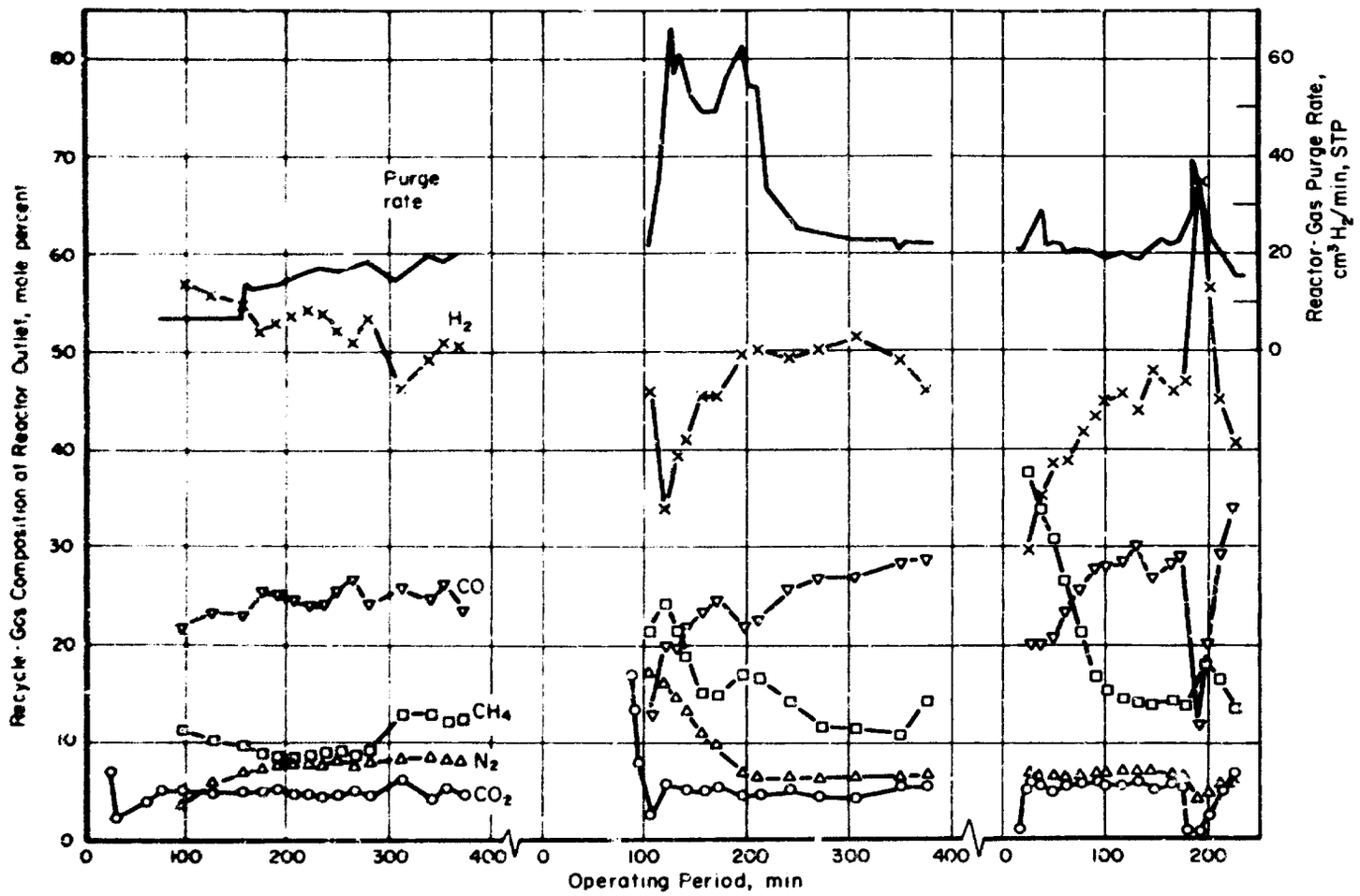


FIGURE 25. REDUCTION OF CARBON DIOXIDE

(Test 59-49)

Continuous decrease in reaction rate, as shown in Figure 26, was apparently caused by (1) decrease in recycle rate and (2) increase in carbon-to-iron ratio. In order to clarify the latter effect, the reaction rate was corrected to the initial recycle rate of 12.6 liters/min, based upon the linear relationship between the reaction and the recycle rates as shown in Figure 22. The adjusted rate curve was then integrated to establish the relationship between the reaction rate and the carbon-to-iron ratio. Results, plotted in Figure 26, indicate that the reaction rate initially goes through a maximum, remains constant until the carbon-to-iron ratio reaches about 24, and decreases thereafter. On the basis of a carbon-to-iron ratio of 24, the predesign estimate on expendable-catalyst requirement will be reduced from 24.2 kg to 10.1 kg.

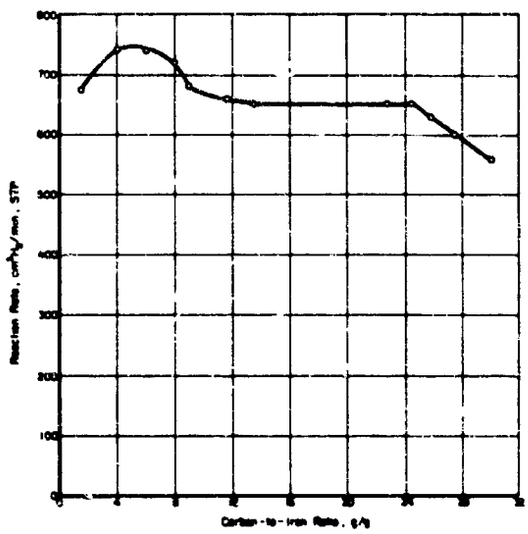

FIGURE 26. EFFECT OF CARBON-TO-IRON RATIO ON REACTION RATE

(Test 59-49; Recycle Rate, 12.6 liters/min, STP; Reactor Temperature, 595 C)

## Reactor Modification and Extended Test

The original reactor design, shown in Figure 23, was found after several tests to have deficiencies that caused premature shutdown of the reactor due to excessive buildup of pressure drop through the reactor. Pressure drop was caused by formation of carbon outside the catalyst canister throughout the reactor interior, especially inside the reactor-outlet line, and by the long flow passage from top to bottom of the canister. Since attainment of high packing density and full utilization of the catalyst-canister volume required extended reactor operation, several modifications of the reactor-canister assembly were undertaken.

Figure 27 shows simplified schematics of the original and modified reactor-canister configurations. The following changes were made in the design and operation of the modified unit:

(1) A new catalyst-canister (A) was fabricated from a 50 by 70-mesh Monel screen rolled into a 70-cm-ID by 273-cm-length tube. The screen was closed at the bottom by a Monel sheet and supported on the side by four longitudinal strips of Monel, 1.27 cm in width. The strips were fastened to the canister cap, also fabricated from Monel, to give overall support to the canister. Monel was selected on the basis of some preliminary test results obtained with a Monel screen, which had indicated that carbon would not form on Monel surface. The conclusion, however, has proved to be inaccurate in a subsequent test in which Monel deteriorated over an extended test period.

(2) The inner reactor tube (B) including a portion of the reactor-outlet line was fabricated from Monel.

(3) The interior surface of the reactor (C) was electroplated with copper to approximately 0.05-mm thickness.

(4) The recycle-gas flow through the reactor was reversed so that the gas enters at the bottom of the reactor, flows radially inward through the canister screen, and exits from the top of the catalyst canister.

An extended test was carried out with the modified reactor-canister unit over a period of 39 hours. The canister was charged initially with 20 g of the steel-wool catalyst. Experimental data from the test are shown in Figure 28. During the first half of the test period, the operating conditions fluctuated while attempts were made to establish steady-state reactor temperature and recycle-gas composition. Best results were obtained by using the outside wall heater alone with the inside heater off and maintaining $CO_2$ concentration in the recycle gas at a relatively high level. Steady-state operation was achieved during the latter half of the test period, and the reaction rate did not drop when the test was terminated. The reaction rate decreased momentarily on two occasions when the recycle rate and the temperature were decreased, but the rate recovered when the disturbances were removed. Data taken during steady-state operation toward the end of the test are summarized in Table VI. A carbon-to-catalyst ratio of 20 and a packing density of 0.47 g/cm$^3$ of the carbon product based on the catalyst-canister volume were obtained. The packing density attained is close to the predesign estimate of 0.45 g/cm$^3$.

A photograph of the reactor-cap and inside-heater assembly in Figure 29 shows copper-plated interior of the cap after the test. The surface remained mostly clean and free of carbon deposit, except for some that apparently had been carried over from the canister. Figure 30 shows carbon product recovered from the test, including a few chunks in the foreground, and the catalyst canister recovered from the extended test. The Monel screen was severely attacked and has deteriorated, most likely due to nickel carbide formation.

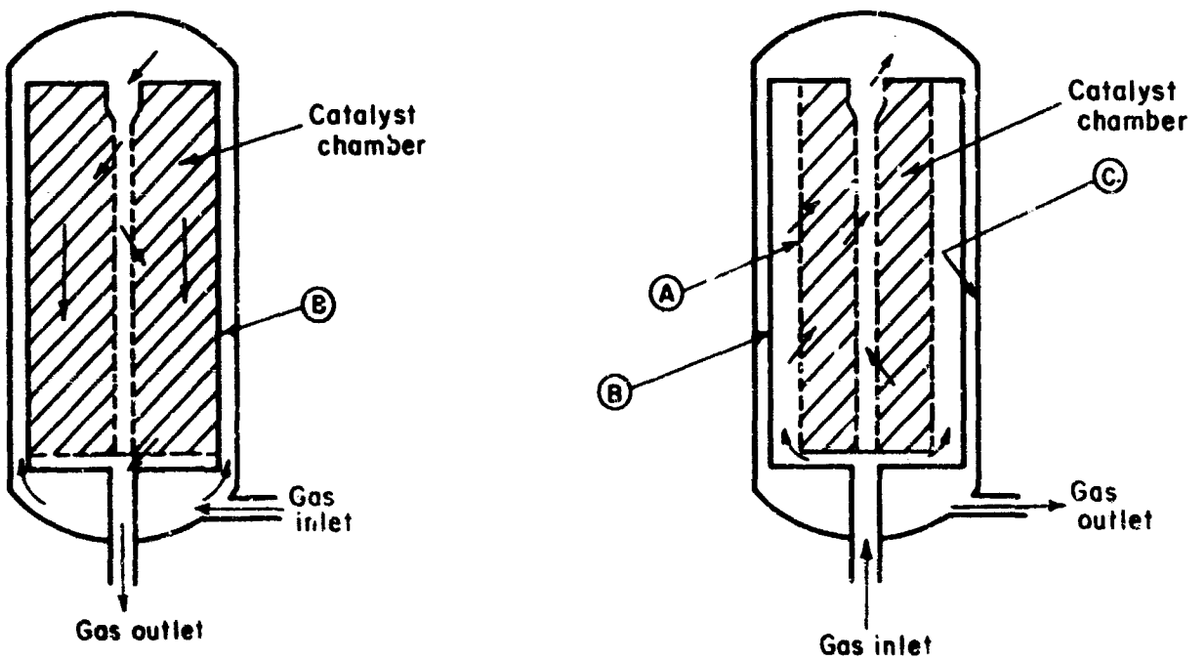


a. Original Design and Gas Flow

b. Modified Design and Gas Flow

(A) Catalyst canister
(B) Inner reactor tube
(C) Interior surface

FIGURE 27. REACTOR MODIFICATION

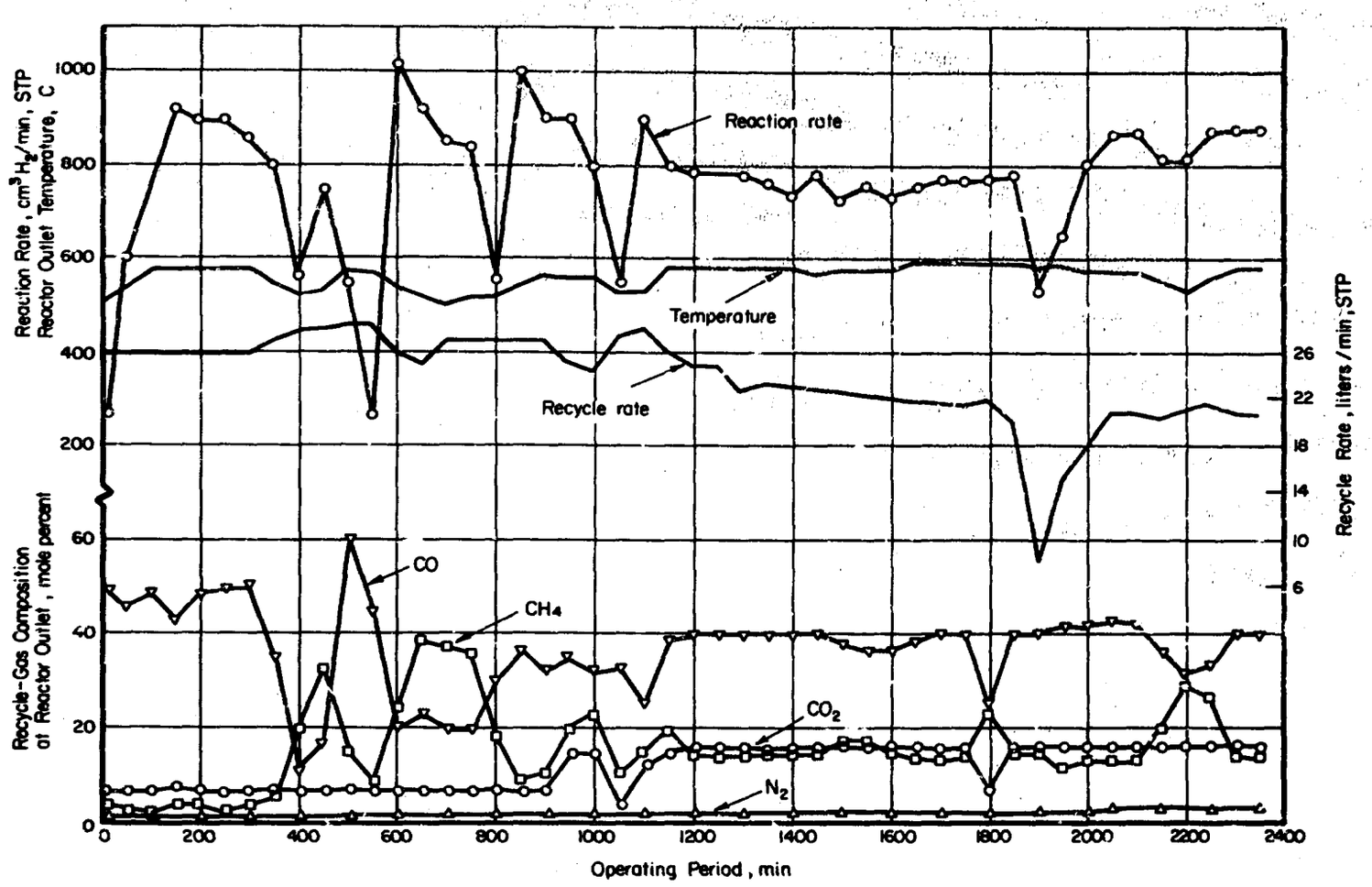


FIGURE 28. EXTENDED TESTING OF REACTOR

(Test 89-13)

FIGURE 29. PHOTOGRAPH OF REACTOR-CAP AND INSIDE HEATER ASSEMBLY AFTER TEST

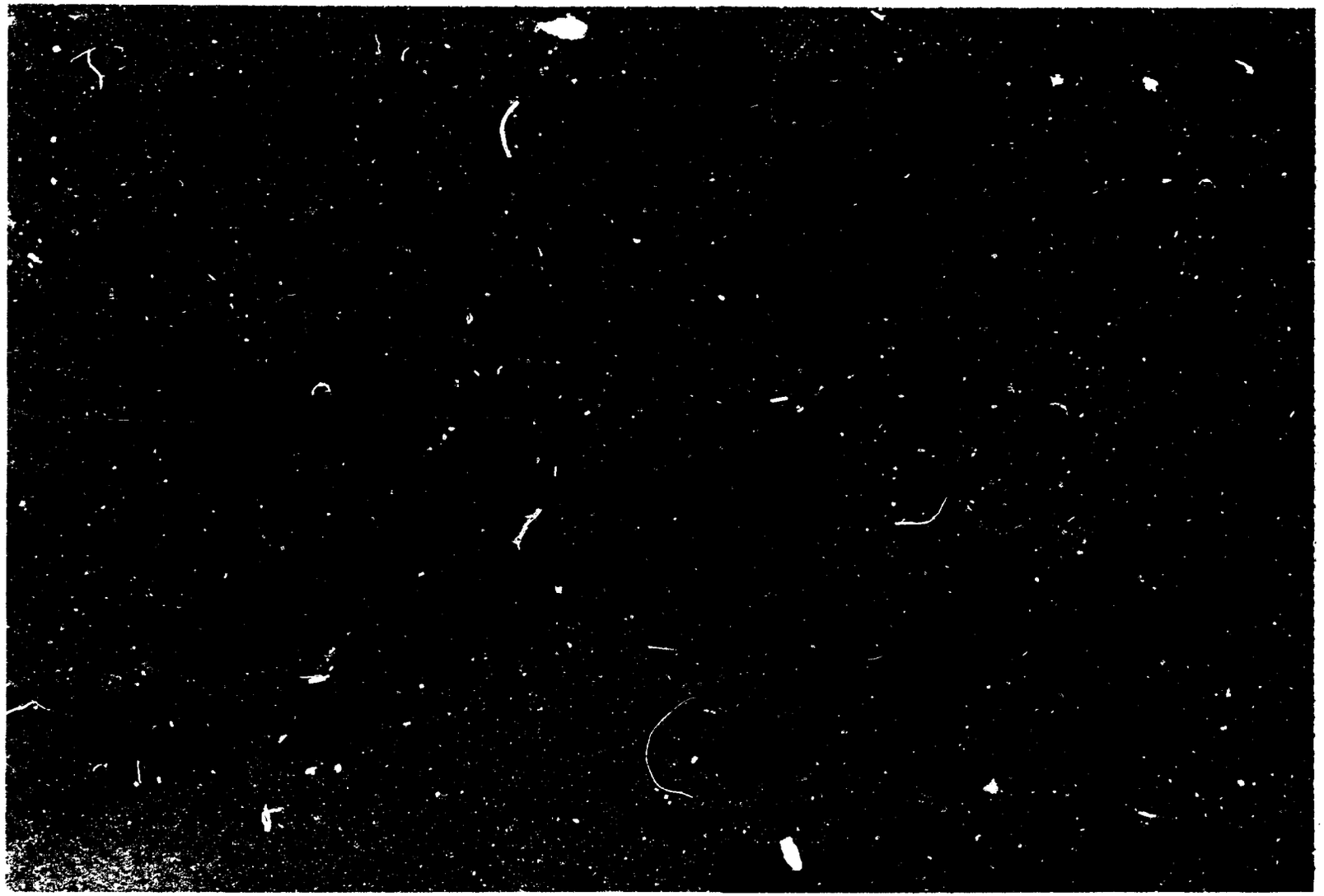

FIGURE 30. CARBON PRODUCT AND CATALYST-CANISTER UNIT AFTER TEST

TABLE VI. TEST DATA FROM EXTENDED OPERATION OF MODIFIED REACTOR UNIT

(Test 89-13)

| | |
|---|---|
| Catalyst Charge, 0000-Gage Steel Wool, g | 20.0 |
| Reactor Temperature, C | |
| At reactor outlet | 570 |
| At reactor inlet | 470 |
| At outer wall of reactor | 715 |
| Recycle Rate, liters/min, STP | 21 |
| Recycle-Gas Composition on $H_2O$-Free Basis, mole percent | |
| $CO_2$ | 16 |
| CO | 40 |
| $CH_4$ | 14 |
| $H_2$ | 28 |
| $N_2$ | 2 |
| Reaction Rate, $cm^3$ $H_2$/min, STP | 850 |
| Carbon-to-Catalyst Ratio, g/g | 20 |
| Carbon Density, $g/cm^3$ | 0.47 |

## Materials of Construction

Materials that have been found to be catalytic and susceptible to deterioration in the reaction environment include stainless steels (Type 304 and Type 347), nickel, and Monel. The deterioration is most likely due to formation of metal carbides and is evident from extended exposure to the reaction environment. In order to confine carbon formation to the catalyst canister, none of the above materials as well as any other ferrous or nickel alloys would be recommended for use as a material of construction for the reactor and the regenerative heat exchanger. Copper, bronze, and brass have been found to be noncatalytic, but the latter two have a poisoning effect on iron catalysts. Copper becomes brittle and structurally weak, but it effectively inhibits carbon formation on its surface and remains clean in the reaction environment. Copper appears promising for use as a coating material on a substrate of a high-temperature alloy to prevent carbon formation and protect the substrate material.

## Carbon Removal

A technique was desired for removing carbon product without shutdown and disassembly of the reactor as an alternative to achieving high packing density of carbon in the canister. The technique would depend on forming the carbon as loose aggregates of fine particles and elutriating the fines into a filter-collector unit by periodic reversal of recycle-gas flow.

Figure 31 shows schematically a carbon-removal system employed. During normal operation, the filter-collector unit was isolated from the reactor loop by the

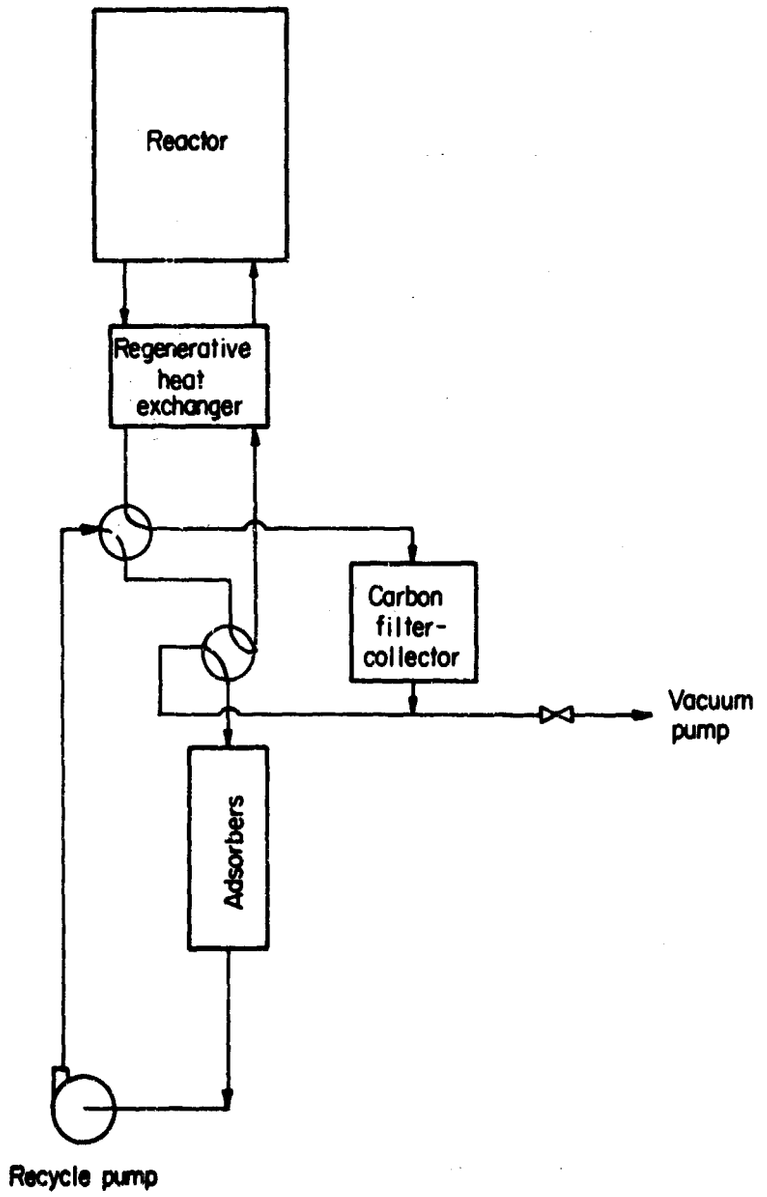


FIGURE 31. FLOWSHEET OF CARBON-REMOVAL SYSTEM

two-stack, four-way valve. To remove carbon, the recycle-gas flow was reversed through the reactor and the regenerative heat exchanger and diverted through the filter-collector unit.

Removal of carbon was unsuccessful with the method and equipment used. The failure is attributed to a need for loosening and breaking up carbon formed in the canister into fine particles. The reactor unit may have to be modified extensively, including a mechanical or an ultrasonic device for breaking up carbon and also perhaps a high-capacity recycle pump. Considerable development work would be needed to test the technical feasibility of the proposed method.

## Integrated Operation of Carbon Dioxide-Reduction and Water-Electrolysis Units

In order to establish the capability of adsorption columns for water transfer between the reactor unit and a vapor-feed water-electrolysis unit, an integrated system was assembled and tested. For this purpose a phosphoric acid electrolysis unit was employed. The unit is a matrix-type module, operated with a water-vapor feed. The system was not completely closed because the electrolysis unit was not designed to provide hydrogen under pressure. Hydrogen feed to the reactor unit was, therefore, supplied from a cylinder source. Water for electrolysis was supplied entirely from the reactor unit via the silica-gel water-transfer unit.

The water-electrolysis unit used in the integrated-system test is shown in Figure 32. The unit was designed for operation on air at 24 C and 40 percent relative humidity to produce 302 g $O_2$/day (1/3-man rate) at 28 volts and 907 kg $O_2$/day (1-man rate) at 32 volts. Detailed information about the unit is given by Clifford*.

A flowsheet of the electrolysis unit and the water-transfer loop is shown in Figure 33. In order to obtain performance data in experimental study of a matrix-type vapor-feed cell, the temperature and humidity of the gas at the cell inlet must be carefully controlled. Temperature control was achieved within 1 C of a set level by on-off control of cooling-water flow through the heat exchanger (HX-3) by means of a temperature controller (TC). To control humidity, a solenoid valve (SV) installed in the feed line was operated by a humidity indicator-controller (H-I/C) to bypass the water feed when the inlet humidity rose above a set point. Warm water at 49 C was circulated through the storage-feed column (SG-5). Secondary control of water feed was carried out by coarse regulation of gas flow at the blower (B-4) to keep the solenoid valve open to the electrolysis unit about 90 percent of the time. The relative humidity of the gas at the cell inlet was controlled within 0.5 percent of a set point. The dew point at the outlet of the storage-feed column (SG-5) fluctuated between 36.6 C and 43.3 C, but the fluctuation did not affect humidity control. Close control of temperature in SG-5, therefore, would not be needed. The electrolysis unit was operated at a 1/2-man rate under the following conditions:

| | |
|---|---|
| Rate of $O_2$ production, g/day | 454 |
| Current density, ma/cm$^2$ | 38.7 |
| Inlet temperature, C | 28.9 ± 1.0 |
| Inlet relative humidity, percent | 40.5 ± 0.5 |

*Clifford, J. E., op. cit.

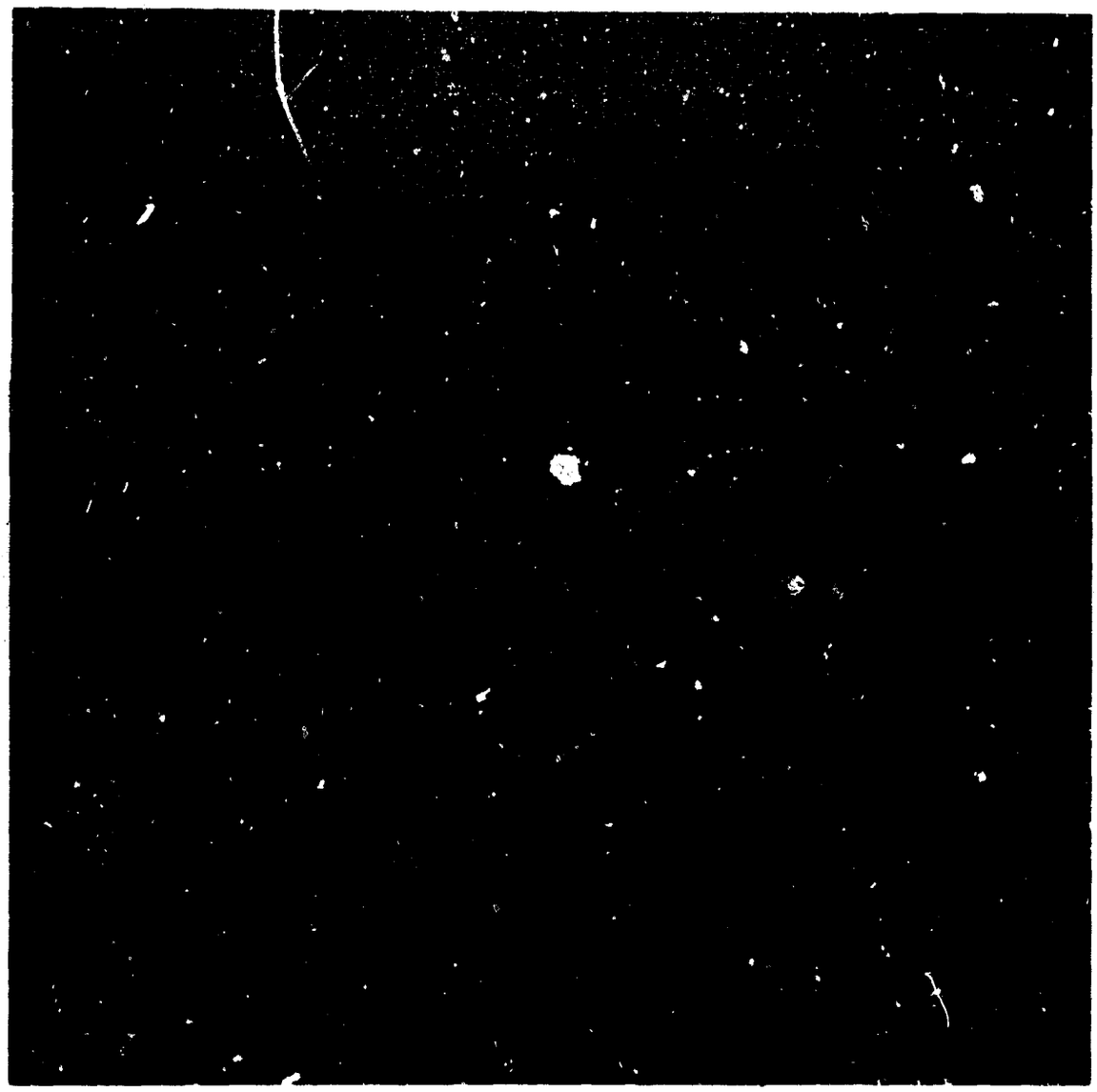

FIGURE 32. WATER-VAPOR ELECTROLYSIS MODULE

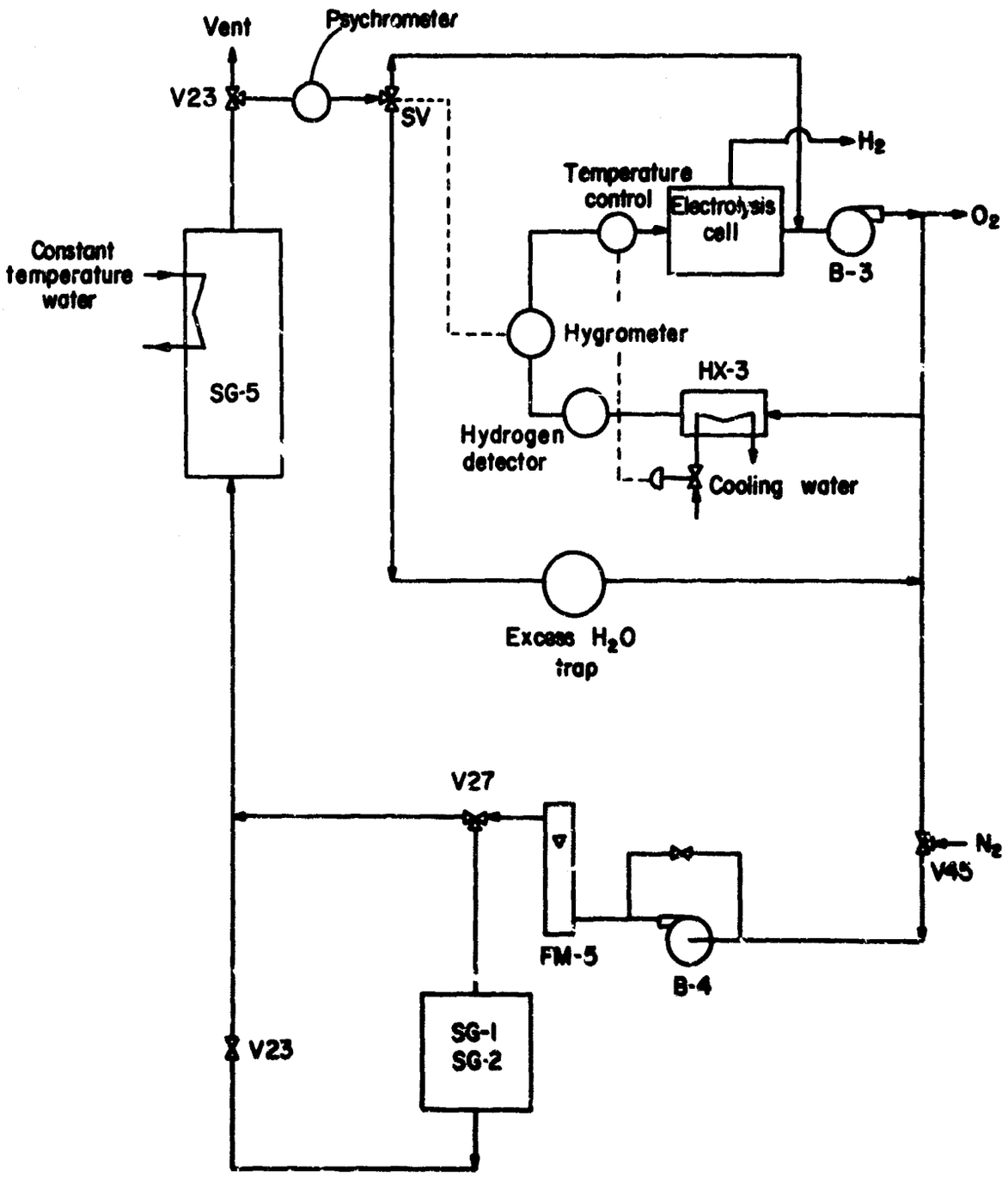


FIGURE 33. FLOWSHEET OF WATER-TRANSFER AND ELECTROLYSIS LOOP

| | |
|---|---|
| Total gas flow through cell, liters/min, STP | 495 |
| Current efficiency based on $H_2$ collection, percent | 100 ± 1 |
| Gas-temperature rise through cell, C | 9.5 |
| Pressure drop through cell, cm $H_2O$ | 2.8 |

By using the silica-gel column SG-5 for intermediate storage of feed water, the electrolysis unit and the reactor unit could be operated more or less independently of each other. The two units could be isolated from each other by means of a three-way valve (V27) and shut-off valves (V23 or V41) during periods in which the reactor unit was shut down to switch silica-gel columns in the reactor unit. The integrated system was operated for 47 hours over a 7-day period. The reactor unit was operated at slightly over a 1/2-man rate; excess water produced was collected in a trap installed in the line bypassing the electrolysis unit. The performance of the electrolysis unit was consistent and free of operational upsets, such as flooding and dehydration of matrix. The test established conclusively the technical feasibility of operating silica-gel columns under gravity-independent condition for removal of water vapor from the reactor unit and for transfer and feeding of water vapor to a matrix-type electrolysis unit. Thus, the new appraoch to an integrated Bosch/electrolysis system does not involve liquid water and avoids gas/liquid separation problems.

## SECTION VI

## DESIGN OF A 3-MAN SYSTEM

On the basis of research performed in this program, design calculations were made on a 3-man integrated system to obtain estimates of fixed weight and power requirement. The system consists of a carbon dioxide-reduction unit and a phosphoric acid water-electrolysis unit. The design method developed in the predesign analysis was used.

### Reactor Unit

A schematic diagram of a proposed reactor-heat exchanger assembly is shown in Figure 34. The reactor consists of a tubular section with a removable top to which a catalyst-canister is attached. The catalyst canister is made of two concentric tubes of wire screens and supported by a plate attached to an inner reactor tube which is perforated. Gas enters at the bottom of the reactor, flows radially inward through the canister and into the inner tube, and exits at the bottom of the reactor. The heat exchanger is a cross-flow, multipass unit with plate-fin surfaces. Heat is supplied from a tubular heater located around the outside wall of the reactor. Design calculations are summarized in Table VII.

Specifications and operating characteristics of the primary water-adsorption columns in the reactor loop and the secondary adsorption column in the water-transfer loop for water storage are given in Tables VIII and IX, respectively. Design features are given schematically in Figure 26. Cooling and heating requirements were estimated by assuming the use of Coolanol-45 as the heat-transfer fluid.

### Electrolysis Unit

Estimates of fixed weight and power requirement for a phosphoric acid water-vapor electrolysis unit is given by Clifford*. The values reproduced in Table X are obtained on the basis of an optimum current density of 16.1 ma/cm$^2$ and a power penalty of 0.136 kg/watt (0.3 lb/watt). The weight and power penalties for the water-vapor electrolysis cell are 2.3 kg and 93 watts higher in comparison with a palladium-silver electrolysis unit with an alkaline electrolyte. The acid cell, however, can be operated with moisture in cabin air, and this could provide alternative approaches to system integration.

### Weight and Power Estimates on Integrated System

Total fixed weight and power estimates on an integrated 3-man system is summarized in Table XI. The proposed batch-process system consists of two separate carbon dioxide-reduction units to be operated alternately and a phosphoric acid water-electrolysis unit. The fixed weight of expendable catalyst and catalyst-canister was obtained on the basis of catalyst requirement of 1 gram per 20 grams of carbon produced and a carbon-packing density of 0.45 g/cm$^3$ in the catalyst canister. The total weight penalty was estimated as 317 kg, which compares favorably with a weight penalty of 29 kg estimated for a continuous process with one reactor unit.

*Clifford, I. T., op. cit.

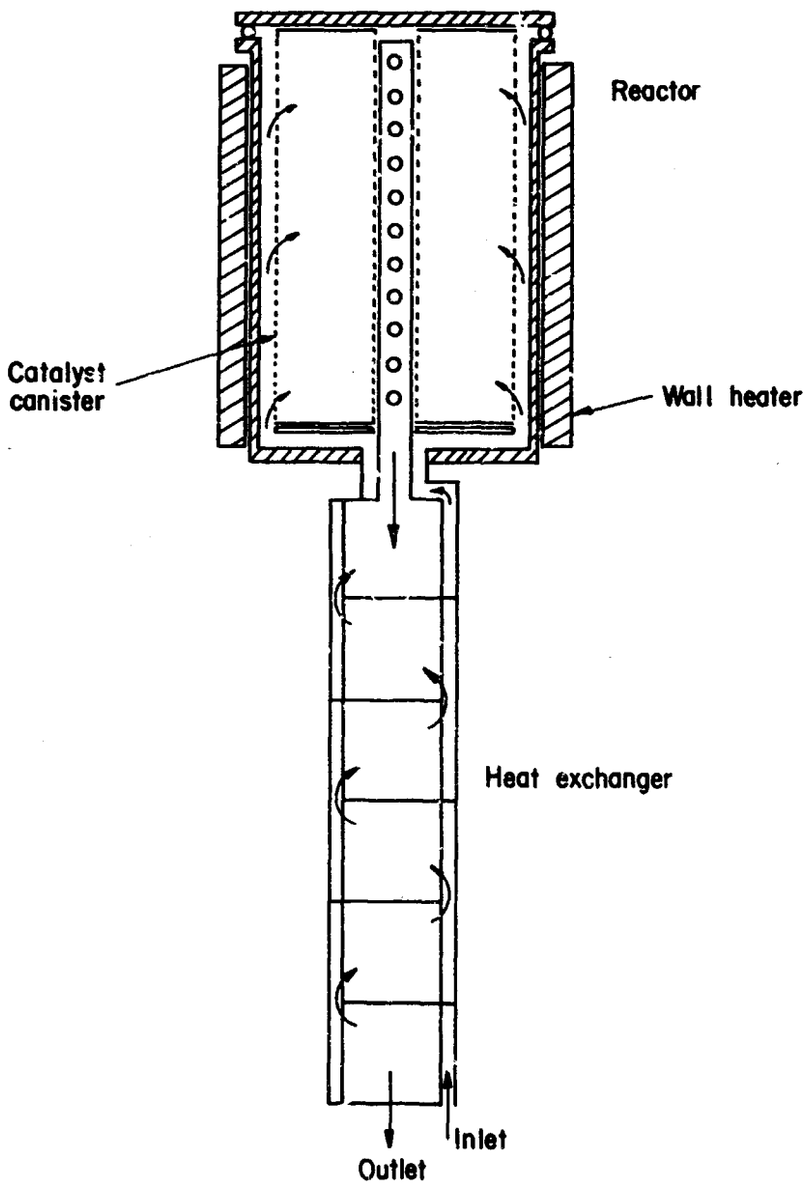


FIGURE 34. REACTOR-HEAT EXCHANGER ASSEMBLY

TABLE VII. DESIGN AND OPERATING CHARACTERISTICS OF REACTOR-HEAT EXCHANGER ASSEMBLY

(3-Man System)

| | |
|---|---|
| Basis, kg $CO_2$/day | 3.0 |
| Material of Construction | High-temperature alloy with copper coating |
| Insulation: Thermal Conductivity, watt/cm$^2$ C/m | 0.069 |
| Density, g/cm$^3$ | 0.064 |
| Reactor | |
| Designation | R-1, R-2 |
| Operating Time/Cycle, days | 2 |
| Bulk Density of Carbon Deposit, g/cm$^3$ | 0.47 |
| Catalyst-Canister Volume, cm$^3$ | 3480 |
| Dimensions: OD of Wall Heater, cm | 17.4 |
| Length, cm | 24.2 |
| Temperature at Heater Surface, C | 715 |
| Insulation Thickness, cm | 15 |
| $CO_2$ Concentration at Reactor Outlet, mole percent on $H_2O$-free basis | 16 |
| Recycle Rate, liters/min, STP | 61.7 |
| Fixed Weight, kg | 10.8 |
| Heater Power, watts | 295 |
| Heat Exchanger | |
| Designation | HX-1, HX-2 |
| Core Dimensions, cm | 3.8 x 3.8 x 22.9 |
| Outside Dimensions, cm | 2.7 OD by 22.9 length |
| Insulation Thickness, cm | 10 |
| Fixed Weight, kg | 4.4 |

TABLE VIII. PRIMARY WATER-ADSORPTION COLUMNS IN REACTOR UNIT

(3-Man System)

| | |
|---|---|
| Designation | SG-1, SG-2, SG-3, and SG-4 |
| Adsorber Dimensions: OD, cm | 12 |
| Length, cm | 25 |
| Adsorbent: Buffer-Grade Silica Gel at Gas Inlet, g | 410 |
| Molecular Sieve 13X at Gas Outlet, g | 610 |
| Adsorption: Coolant Specific Heat, cal/g C | 0.45 |
| Coolant Temperature, C | 5 |
| Coolant Flow, kg/min | 5 |
| Adsorption Cycle, hr | 5 |
| Adsorption Rate, g $H_2O$/hr | 102.1 |
| Adsorption Capacity, g $H_2O$/g solid | 0.5 |
| Desorption: Heating-Fluid Specific Heat, cal/g C | 0.45 |
| Heating-Fluid Temperature, C | 100 |
| Heating-Fluid Flow, kg/min | 5 |
| Desorption Cycle, hr | 4 |
| Desorption Rate, g $H_2O$/hr | 127.5 |
| Fixed Weight, kg | 3.0 |

TABLE IX. SECONDARY ADSORPTION COLUMN IN WATER-TRANSFER LOOP

(3-Man System)

| | | |
|---|---|---|
| Designation | | SG-5 |
| Adsorber Dimensions: | OD, cm | 12 |
| | Length, cm | 37 |
| Adsorbent: | Buffer-Grade Silica Gel, g | 1300 |
| Water Content: | Maximum, g $H_2O$/g solid | 0.8 |
| | Minimum, g $H_2O$/g solid | 0.6 |
| Heating Fluid: | Specific Heat, cal/g C | 0.45 |
| | Temperature, C | 49 |
| | Flow Rate, kg/min | 5 |
| Gas Flow, liters/min, STP | | 85 |
| Fixed Weight, kg | | 3.3 |

TABLE X. DESIGN AND OPERATING CHARACTERISTICS OF PHOSPHORIC ACID WATER-ELECTROLYSIS UNIT

(3-Man System)

| | |
|---|---|
| Designation | E |
| Electrolyte Concentration, percent by weight of $H_3PO_4$ | 75 |
| Gas Flow, liters/min, STP | 2970 |
| Gas Temperature at Cell Inlet, C | 29 |
| Relative Humidity at Cell Inlet, percent | 40.5 |
| Current Density, ma/cm$^2$ | 16.1 |
| Cell Voltage, volt/cell | 2.25 |
| Fixed Weight, kg | 13.6 |
| Power, watts | 855 |

TABLE XI. FIXED WEIGHT AND POWER ESTIMATES ON INTEGRATED CARBON DIOXIDE-REDUCTION AND WATER-ELECTROLYSIS SYSTEM

(Basis: 3 Man-Years[a])

| Designation[b] | Item | Fixed Weight, kg | Power, watts |
|---|---|---|---|
| R-1, R-2 | $CO_2$ reduction reactors | 21.6 | 295 |
| HX-1, HX-2 | Regenerative heat exchanger | 8.8 | -- |
| SG-1, -2, -3, -4 | Primary $H_2O$ adsorption columns | 12.0 | -- |
| B-1, B-2 | Recycle-gas pumps | 4.0 | 95[c] |
| E | Water-vapor electrolysis unit | 13.6 | 855 |
| HX-3 | $O_2$ cooler | 2.5 | -- |
| B-3 | $O_2$ blower | 0.5 | 27 |
| B-4 | $O_2$ blower | 0.5 | 9 |
| SG-5 | $H_2O$ storage-feed column | 3.3 | -- |
| -- | Gas-feed system[d] | 2.7 | -- |
| | Subtotal I | 69.5 | 1281 |
| -- | Piping, valves, and support[e] | 34.8 | |
| -- | Iron catalyst[f] | 14.9 | |
| -- | Expendable catalyst canisters[g] | 23.8 | |
| | Subtotal II | 143.0 | |
| -- | Equivalent weight penalty[h] on power | 174.2 | |
| | Total | 317.0 kg[i] | |

(a) $CO_2$ rate at 1.0 kg/man-day (2.2 lb/man-day).
(b) System components are shown in Figure 2.
(c) Total pressure drop in the reactor loop at 258 mm Hg (5 psi).
(d) Estimates obtained from the work by Remus[*].
(e) Estimated as 50 percent of Subtotal I.
(f) Estimate based on carbon-to-iron ratio of 20.
(g) Estimate based on carbon-packing density of 0.45 g/cm$^3$.
(h) Weight penalty for power at 0.136 kg/watt (0.3 lb/watt).
(i) Excluding instrumentation.

(*) Remus, G. A., et al., op. cit.

## SECTION VII

## CONCLUSIONS

On the basis of the research performed on this program, the following conclusions may be drawn:

(1) Comparison of two approaches to reduction of carbon dioxide by the modified Bosch method, one based on continuous removal of carbon employing a single reactor unit and the other based on batchwise removal of carbon employing two reactor units, shows no substantial difference between the two as far as the total system-weight penalties are concerned on a 3-man-year basis. The total system-weight penalties for a batch process and a continuous process are estimated as 317 kg and 329 kg, respectively. Design analysis shows that over 90 percent of power input to the reactor is expended as heat loss by conduction through the reactor and heat-exchanger insulation and as loss due to heat-exchanger inefficiency.

(2) Solid adsorbents look promising for gravity-independent separation and removal of water vapor from reactor-recycle gas and for supplying water-vapor feed to a matrix-type electrolysis unit. An equal-volume mixture of molecular sieve 13X and buffer-grade silica gel provides a sorption capacity of 0.5 g $H_2O$/g adsorbent.

(3) Copper appears to be the best choice among several materials tested to withstand the reaction environment and avoid undesirable carbon formation outside the catalyst canister. Reactor components fabricated from stainless steel alloys (Type 347 and Type 304), nickel, and Monel catalyze the reaction and degrade under exposure to the reaction environment. From the structural-strength consideration, a high-temperature alloy steel coated with copper would be a suitable material for the reactor and the regenerative heat exchanger.

(4) Steel-wool catalyst employed in carbon dioxide reduction requires less than 1 hour of activation in hydrogen atmosphere at approximately 600 C to be fully effective. The reaction rate is relatively constant as the reaction progresses to a point at which a carbon-catalyst ratio of 24 is reached, and the rate drops thereafter as the ratio increases. An ultimate carbon-catalyst ratio of 20 can be readily attained in practice.

(5) A carbon packing density of 0.47 g/cm$^3$ can be attained in the catalyst canister by supplying heat to a tubular reactor from its outside wall and passing reactants radially toward the center of a cylindrical catalyst canister.

(6) The effect of reaction temperature on the rate of $CO_2$ reduction is small within a range of 583 to 642 C, the reaction rate being only 10 percent higher at the upper limit of the indicated range.

(7) The rate of carbon dioxide-reduction reaction is not affected by changes in recycle-gas composition resulting from changing $CO_2$ concentration between 6 and 16 mole percent at the reactor outlet. The reaction rate is significantly lowered at a $CO_2$ concentration of 3 percent.

(8) The reaction rate increases linearly with recycle rate between 8 and 21 liters/min, STP. The two rates, however, are not directly proportional to each other. The

reaction rate is increased from 500 to 810 $cm^3$ $H_2$/min, STP, by raising the recycle rate from 10 to 20 liters/min, STP.

(9) A small, lightweight water-vapor electrolysis unit using Pd-25 Ag cathodes can be designed, but further development is dependent on defining a suitable matrix for extended operation. A water-vapor electrolysis unit with phosphoric acid electrolyte performed satisfactorily in the integrated system except that delivery of hydrogen at the pressure required for direct feed to the Bosch reactor was not demonstrated.

## SECTION VIII

## RECOMMENDATIONS

Further experimental research is required to study the materials problem. Deposition of carbon outside the catalyst chamber is undesirable not only in the modified Bosch system but also in pyrolysis of methane in the closed Sabatier system and in the disproportionation reaction involved in the solid-electrolyte system. An extensive test program should be undertaken to evaluate single and composite materials for ductility and carbon-deposition characteristics in various reaction environments. In conjunction with materials research, further development and design study of a reusable catalyst canister is recommended, since expendable canisters contribute a significant weight penalty to the system.

Further effort to construct and evaluate a water-vapor electrolysis unit using Pd-25 Ag cathode should be deferred until a suitable matrix and extended operating life are demonstrated in experimental laboratory tests.

## APPENDIX I

## EQUIPMENT DETAILS AND OPERATING PROCEDURES

Further details are given in this Appendix on the equipment and procedures employed for reactor operation, water transfer, calibration of $CO_2$ analyzer, and feeding of hydrogen and carbon dioxide to the reactor unit.

### Reactor Operation

The following operating procedure was employed for the reactor unit:

(1) After the catalyst is charged, the entire unit is evacuated to remove air and filled with hydrogen. The hydrogen-feed point is located at the inlet of the regenerative heat exchanger and on the discharge side of the recycle-gas pump. The total pressure at this location in the reactor loop is controlled by setting the hydrogen-feed pressure around 1020 mm Hg absolute. Hydrogen is thus fed automatically to the unit on demand depending upon the pressure level in the reactor loop.

(2) Recycle-gas pump and heater are turned on to bring the reactor up to operating temperature and to activate the catalyst in hydrogen atmosphere.

(3) Following catalyst activation, carbon dioxide feed is started. Carbon dioxide feed is controlled automatically by a solenoid valve, which is activated by signal from infrared $CO_2$ analyzer, to maintain the concentration of $CO_2$ in the recycle gas at a preset level. The recycle gas is sampled for $CO_2$ measurement at the outlet of the adsorption columns before feed gases are added.

(4) The unit is shut down when the pressure drop in the reactor loop, measured as the pressure difference between the inlet and the outlet of the recycle-gas pump, reaches 258 mm Hg. The $CO_2$ feed is turned off first to remove $CO_2$ and CO from the recycle gas. After the $H_2$ feed, recycle pump, and heater are turned off, the reactor is allowed to cool overnight.

(5) After the reactor has cooled, the unit is evacuated, released to atmosphere, and disassembled for carbon removal

### Water-Transfer Procedure

The initial system design for water transfer was modified to employ a new purging procedure. Although the original hydrogen-purging method was not tested experimentally, further analysis of the integrated system has indicated that vacuum purging of silica-gel adsorbers would be preferable. The original method involved purging the recycle gas remaining at the end of sorption cycle with oxygen and purging the oxygen at

the end of desorption cycle with hydrogen. The modified procedure would involve evacuating the adsorbers at the end of sorption and desorption cycles and would be preferable from a safety standpoint and simplicity of operation. The modified procedure would generate a comparatively less amount of purged gas. If the purged gas is to be recovered by a catalytic burner, the modified method would require a vacuum pump. The added penalty, however, is expected to be small.

The vacuum-purge procedure is described in a flowsheet shown in Figure 35. In operation, recycle gas from the regenerative heat exchanger (HX-1) is diverted through a four-way, two-stack valve (V24) to a silica-gel adsorber (SG-1) for removal of moisture and recycled by a blower (B-1) to the regenerative heat exchanger. When the adsorber is loaded with water, the four-way valve is switched to divert the recycle gas to the second adsorber (SG-2). To regenerate the loaded adsorber (SG-1) the recycle gas remaining in the adsorber is first removed by a vacuum pump. The gas may be fed from the vacuum pump to a catalytic burner and returned to cabin. After evacuation, vacuum line is shut off at V17, and oxygen is introducted through a three-way valve (V25) to remove water and transfer it to the electrolysis unit. A three-way valve (V31) was installed in the desorption loop for collection of liquid water to measure the total output and for analysis of product water. At the end of the desorption cycle the adsorber is evacuated to remove oxygen and is ready for the next sorption cycle.

## Calibration of Carbon Dioxide Analyzer

An infrared analyzer for carbon dioxide was installed in the reactor unit for continuous in-line analysis of carbon dioxide in recycle gas. A flowsheet of the sampling system of the analyzer is shown in Figure 36. A portion of the recycle gas is diverted through the analyzer and returned to the recycle loop continuously. Switching of the analyzer between the two reactor units is done by means of a four-way valve (V30). In operation, recycle gas from the outlet of a recycle blower (B-1 or B-2) is introduced to the sampling system through a shutoff valve (V20 or V38) and a four-way valve (V30). A flowmeter is located on the inlet side of the analyzer. The pressure at the outlet of the analyzer is controlled by a pressure control valve (PCV) set at 120 mm Hg gage with an atmospheric reference. A pressure gage (P) is located at the outlet of the analyzer. The exit gas from the analyzer flows through a shutoff valve (V6) and returns to the inlet of the recycle gas blower through the four-way valve (V30). Calibration gases are introduced to the sampling system through a shutoff valve (V15) and vented through another shutoff valve (V5). Nitrogen and a mixture of carbon dioxide and nitrogen are used as zero gas and span gas, respectively.

The infrared analyzer was checked out to function properly and calibrated using a span gas containing 15.5 percent by volume of carbon dioxide in nitrogen and nitrogen as a zero gas. Calibration was carried out at a controlled pressure of 880 mm Hg absolute as the outlet of the analyzer. Calibration data shown in Figure 37 were calculated from data at 760 mm Hg absolute that were provided by the instrument supplier, assuming a direct proportion between absorption and absolute pressure. Details of alignment and calibration procedures for the a[illegible] may be found in the service manual, "M-S-A Lira Infrared Analyzer Model [illegible]

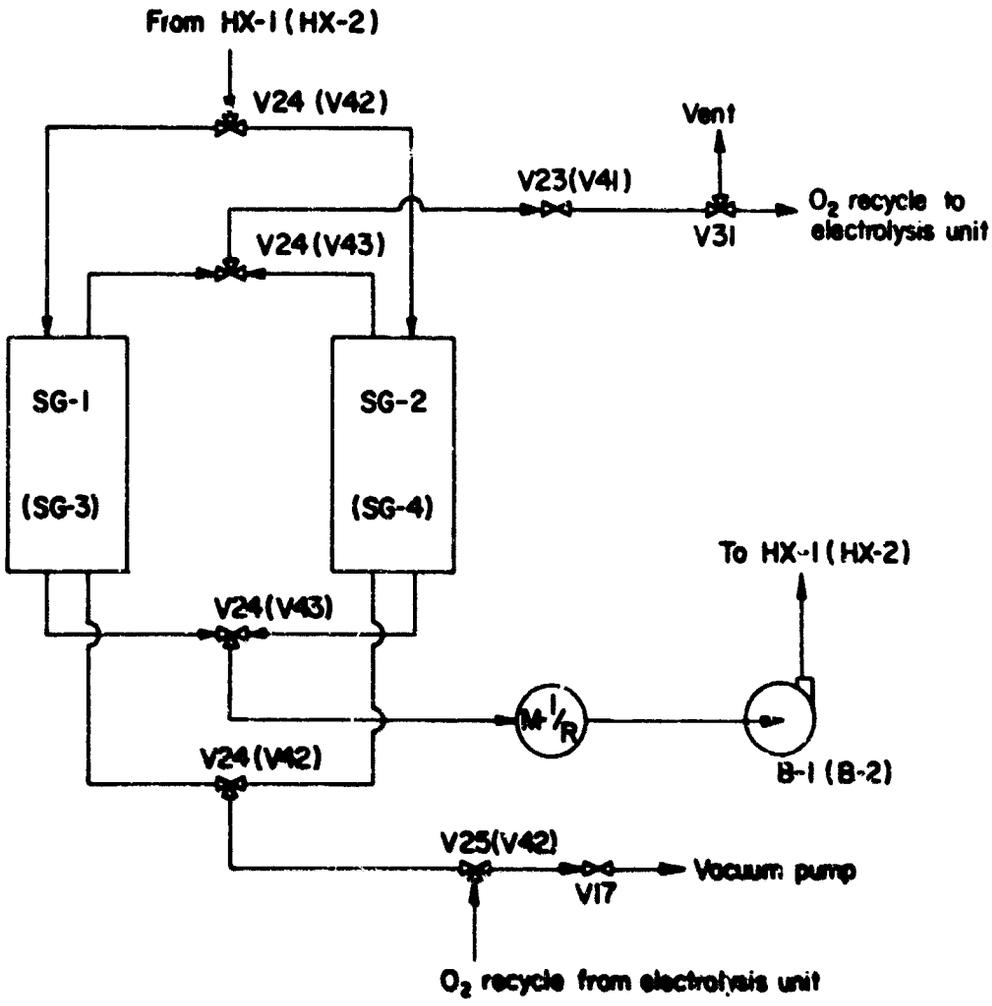


FIGURE 35. FLOWSHEET OF WATER-TRANSFER UNIT

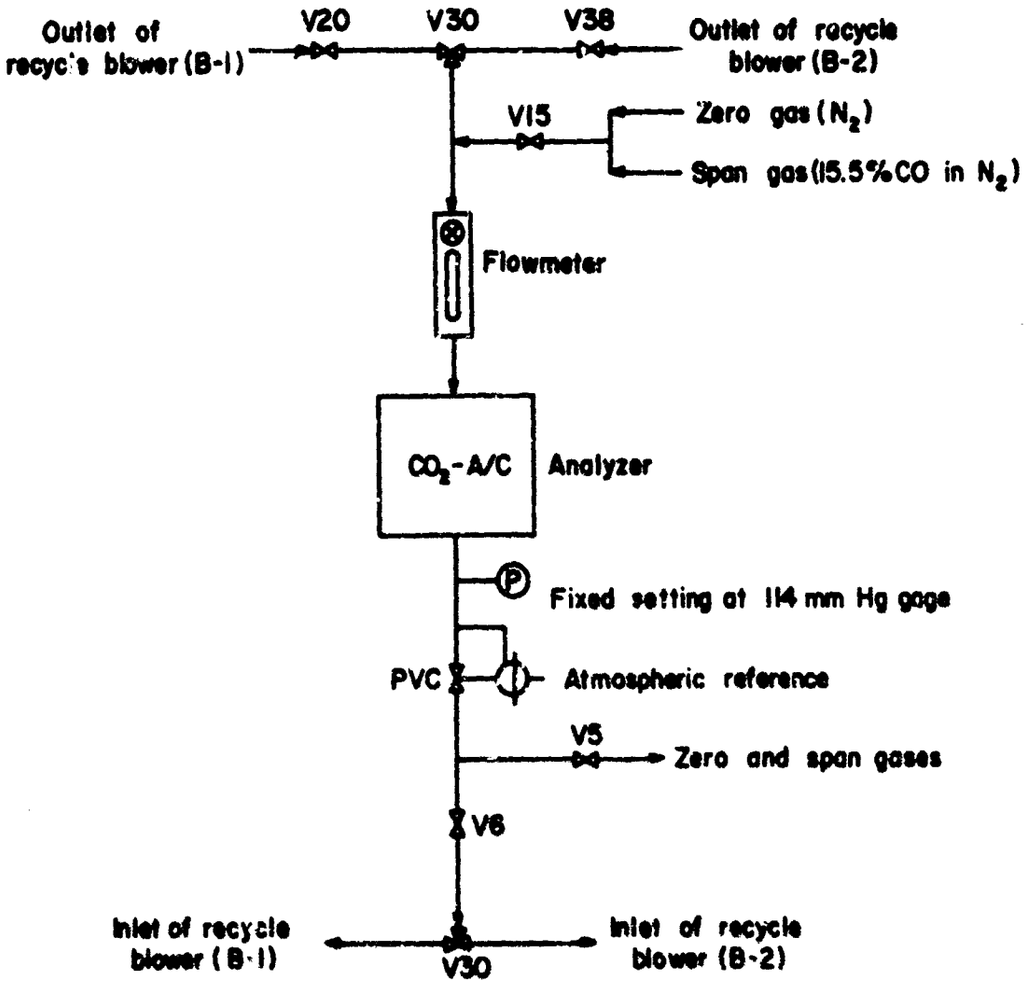


FIGURE 36. SAMPLING SYSTEM FOR CARBON DIOXIDE ANALYZER IN REACTOR UNIT

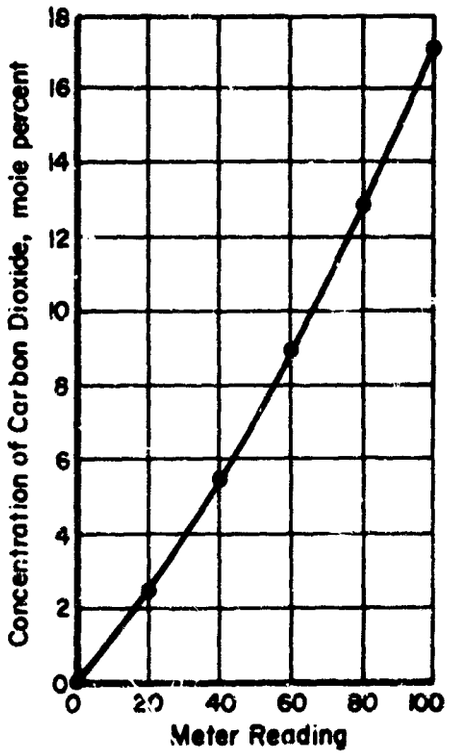


FIGURE 37. CARBON DIOXIDE ANALYZER CALIBRATION

(880 mm Hg absolute at analyzer outlet)

## Reactor Gas Feeds

A flowsheet of hydrogen and carbon dioxide feeds to reactor units is shown in Figure 38. Carbon dioxide is introduced from a cylinder through two needle valves (V11 and V12), connected in parallel, and a four-way solenoid valve (SV) actuated by signals from the carbon dioxide analyzer. One port is normally open and the other normally closed in the solenoid valve. Two flowmeters (FM-3 and FM-4) and two shut-off valves (V3 and V4) are connected in series at the outlet of the solenoid to cover a wide range of feed rate. The carbon dioxide feed is diverted either to the first or the second reactor unit by means of a three-way valve (V33). Hydrogen feed is introduced either from electrolysis unit or from a cylinder through a three-way valve (V9).

Flow rate of hydrogen is controlled by a needle valve (V2) and a flow-control valve (FCV), which is set to a fixed differential pressure of 120 mm Hg across the needle valve. A mass flowmeter (F-I/R) measures and records the flow rate of hydrogen. A pressure-relief valve (V28) is located at the outlet of the flowmeter to prevent excessive pressure buildup in the feed line and to vent hydrogen when the electrolysis unit is in operation without the reactor unit. The hydrogen feed is diverted to either reactor unit by means of a three-way valve (V32). The calibration for the mass flowmeter is shown in Figure 39.

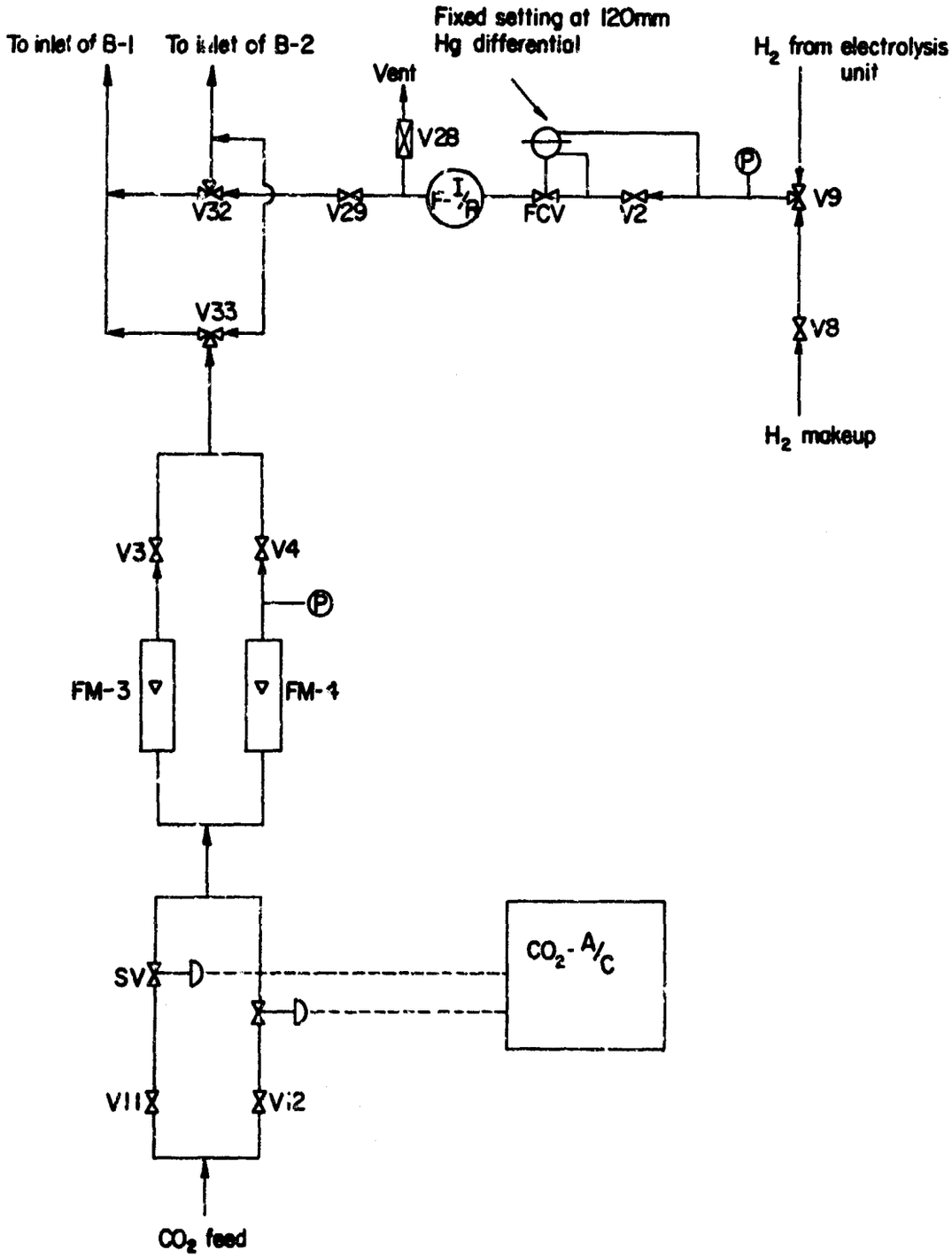


FIGURE 38. FLOWSHEET OF REACTOR FEED UNIT

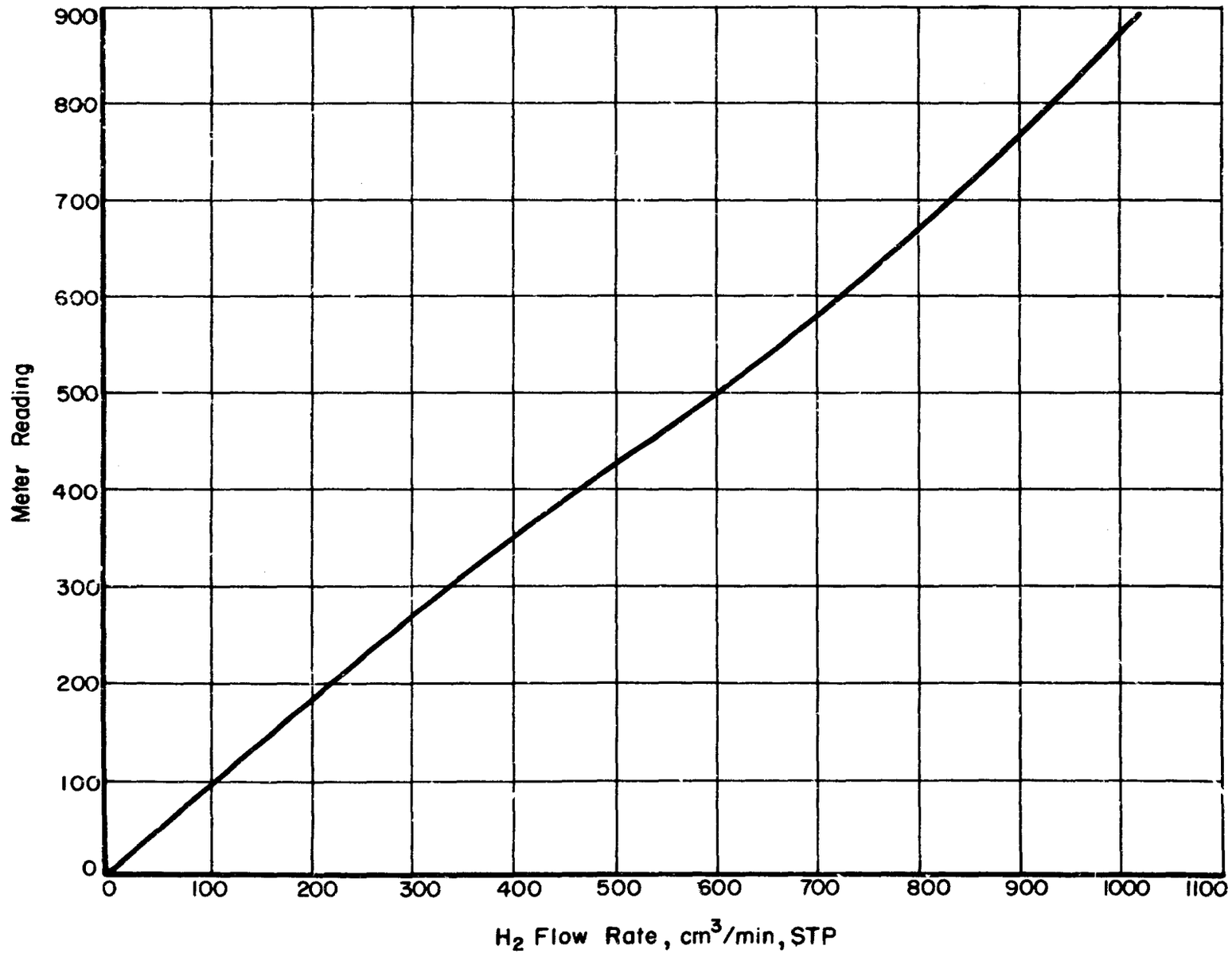


FIGURE 39. HYDROGEN FLOWMETER CALIBRATION

Security Classification

## DOCUMENT CONTROL DATA - R & D

*(Security classification of title, body of abstract and indexing annotation must be entered when the overall report is classified)*

| | |
|---|---|
| 1. ORIGINATING ACTIVITY *(Corporate author)*<br>Battelle Memorial Institute<br>505 King Avenue<br>Columbus, Ohio 43201 | 2a. REPORT SECURITY CLASSIFICATION<br>UNCLASSIFIED<br>2b. GROUP<br>N/A |

3. REPORT TITLE

CARBON DIOXIDE REDUCTION AND WATER ELECTROLYSIS SYSTEM

4. DESCRIPTIVE NOTES *(Type of report and inclusive dates)*
Final Report, 1 February 1966 - 30 September 1967

5. AUTHOR(S) *(First name, middle initial, last name)*

Byung C. Kim, Robert H. Cherry
Edwin S. Kolic, John E. Clifford

| | | |
|---|---|---|
| 6. REPORT DATE<br>May 1968 | 7a. TOTAL NO. OF PAGES<br>71 | 7b. NO. OF REFS<br>4 |
| 8a. CONTRACT OR GRANT NO.<br>AF 33(615)-3444<br>b. PROJECT NO. 6373<br>c. Task No. 637302<br>d. | 9a. ORIGINATOR'S REPORT NUMBER(S)<br><br>9b. OTHER REPORT NO(S) *(Any other numbers that may be assigned this report)*<br>AMRL-TR-67-227 | |

10. DISTRIBUTION STATEMENT

Distribution of this document is unlimited. It may be released to the Clearinghouse, Department of Commerce, for sale to the general public.

| | |
|---|---|
| 11. SUPPLEMENTARY NOTES | 12. SPONSORING MILITARY ACTIVITY<br>Aerospace Medical Research Laboratories<br>Aerospace Medical Div., Air Force Systems Command, Wright-Patterson AFB, OH 45433 |

13. ABSTRACT

An integrated system for oxygen recovery from carbon dioxide was investigated as a breadboard laboratory model of nominal 1/2-man capacity. System design for carbon dioxide reduction was based on alternate operation of two Bosch reactors with periodic cool down for removal of carbon and replenishment of catalyst. Experimental studies demonstrated attainment of the design objectives of a carbon-to-catalyst ratio above 20 and an overall carbon-packing density of 0.45 g/cm$^3$ in the catalyst chamber. Degradation of Bosch reactor materials during extended operation was a problem that was not completely resolved. Experimental studies indicated that a regenerable solid-adsorbent based on combinations of silica gel and molecular sieve operating on alternate cycles of absorption and desorption can be used for efficient transfer of water vapor from the Bosch recycle gas to a water-vapor electrolysis cell. The original matrix-type water-vapor electrolysis unit with Pd-25Ag hydrogen diffusion cathodes did not perform satisfactorily and was replaced by a water-vapor electrolysis unit with phosphoric acid electrolyte for satisfactory evaluation of water-vapor transfer for the integrated system.

DD FORM 1 NOV 65 1473

Security Classification

Security Classification

| 14. KEY WORDS | LINK A ROLE | LINK A WT | LINK B ROLE | LINK B WT | LINK C ROLE | LINK C WT |
|---|---|---|---|---|---|---|
| Life support | | | | | | |
| Oxygen recovery | | | | | | |
| Water electrolysis | | | | | | |
| Bosch reaction | | | | | | |
| System integration | | | | | | |
| Phosphoric acid electrolysis cell | | | | | | |
| Hydrogen diffusion electrode | | | | | | |
| Zero-gravity water transfer | | | | | | |

Security Classifi