ESD-TR-68-227

ESTI FILE COPY

ESD RECORD COPY
RETURN TO
SCIENTIFIC & TECHNICAL INFORMATION DIVISION
(ESTI), BUILDING 1211

ESD ACCESSION LIST
61833
1 of 1 cys.
ESL-L

Technical Note 1968-16

Improved Ferrimagnetic Single-Crystal Sphere Orienter

G. F. Dionne
P. S. Crocker
J. F. Smith

17 July 1968

Prepared for the Advanced Research Projects Agency
under Electronic Systems Division Contract AF 19(628)-5167 by

Lincoln Laboratory
MASSACHUSETTS INSTITUTE OF TECHNOLOGY
Lexington, Massachusetts

AD673355

The work reported in this document was performed at Lincoln Laboratory, a center for research operated by Massachusetts Institute of Technology. This research is a part of Project DEFENDER, which is sponsored by the U.S. Advanced Research Projects Agency of the Department of Defense; it is supported by ARPA under Air Force Contract AF 19(628)-5167 (ARPA Order 498).

This report may be reproduced to satisfy needs of U.S. Government agencies.

This document has been approved for public release and sale; its distribution is unlimited.

MASSACHUSETTS INSTITUTE OF TECHNOLOGY

LINCOLN LABORATORY

IMPROVED FERRIMAGNETIC SINGLE-CRYSTAL SPHERE ORIENTER

G. F. DIONNE
J. F. SMITH

Group 44

P. S. CROCKER

Group 71

TECHNICAL NOTE 1968-16

17 JULY 1968

LEXINGTON MASSACHUSETTS

ABSTRACT

A new ferrimagnetic single-crystal sphere orientation device has been developed for use with a variety of sphere sizes and compositions. Similar to other instruments which operate on a magnetic principle, this orienter provides ⟨110⟩ axes alignments. However, with one small electromagnet, it is considerably simpler than previously reported instruments of this type. From theoretical considerations, it is concluded that high alignment sensitivity will be obtained for polished spheres of low mass density, small radius, high magnetocrystalline anisotropy, and low coefficient of friction between sphere and support. It is also concluded that the sphere should be supported in cavities of conical geometry, with the cone angle as small as possible. The results of both x-ray analysis and microscope visual observation with a number of typical spheres indicate that the combination of accuracy and reliability of the instrument is superior to that of the other devices and suggests that the factors controlling the alignment sensitivity as derived from theory are at least qualitatively correct.

Accepted for the Air Force
Franklin C. Hudson
Chief, Lincoln Laboratory Office

CONTENTS

	Abstract	iii
I.	Introduction	1
II.	Description of Apparatus	2
III.	Theory of Operation	5
IV.	Sensitivity Considerations	7
V.	Results	10
VI.	Conclusions	12
Appendix		14

IMPROVED FERRIMAGNETIC SINGLE-CRYSTAL SPHERE ORIENTER

I. INTRODUCTION

Beeause of the increased use of small ferrimagnetie single-erystal spheres, both in solid-state physies researeh and mierowave deviee applications, interest in the development of methods for erystallographieally orienting these spheres has grown in reeent years. At present, most of this work is earried out by expensive and time-eonsuming x-ray teehniques. More reeently, equipment utilizing the magnetoerystalline anisotropy of ferrite spheres has been reported and sueeessfully used when highest aeeuraey was not required. In general, the advantages of the magnetie orienters lay in their simplicity, speed, and eonvenienee of operation. The major limitations of these devices are sensitivity and reliability, with the result that x-ray methods have often been neeessary for purposes of verifieation.

To date, the authors are aware of three magnetie methods reported in the literature. In eaeh ease, the orientation of the sphere is aeeomplished by aligning the easy axes of magnetization with an applied magnetie field. The methods differ in the manner of sphere mounting in the magnetie field, general procedure for loeating the easy axes, identifieation of the easy axes onee aligned, and eapture of the sphere after orientation.

In the method of Auer,[1] the sphere is plaeed on the surfaee of mereury in a small pan between the poles of the magnet. As the different easy axes are loeated by alignment with the field, their positions are marked on the surfaee of the sphere with a fine needle and marking paint. After removal from the apparatus, the sphere is mounted aeeordingly with referenee to the marks on the sphere. The major drawbaek of this method is the inaeeuraey involved in the marking of the sphere surfaee and subsequent mounting. This proeedure must also plaee a stringent restrietion on the size of the sphere sinee the error inereases as the sphere beeomes smaller.

An alternative seheme was reported by Sato and Carter,[2] who introdueed the idea of orienting the sphere in a $\{110\}$ plane (for a sphere with $\langle 111 \rangle$

easy axes) and capturing it while held by the magnetic field. This method overcame the obvious shortcoming of the earlier approach by fixing the first ⟨111⟩ axis with a small wire attachment and then rotating the magnetic field to locate a second ⟨111⟩ axis without disturbing the initial alignment. In this way, with two horizontal ⟨111⟩ axes, a {110} plane was defined and the sphere could be picked up vertically along a ⟨110⟩ axis. Although this approach met with success for larger spheres, it was found to be inaccurate at diameters less than 0.050 inch, partly because of the friction introduced by the addition of the wire attachment for the second rotation.

A more recent innovation by Willoughby and Brown[3] employs two electromagnets set at 70.5° apart. The sphere is rested on a sapphire watch jewel support and the magnetic field switched alternately between the two magnets. Since the acute angle between the easy or ⟨111⟩ axes is 70.5°, the sphere should gradually rotate into static equilibrium and establish a horizontal {110} plane as in the previous method. Unfortunately, there is also a possibility that a dynamic equilibrium condition will occur if the obtuse angle of 109.5° brackets the angle between the magnets. In this situation, a {110} plane is not horizontal because the sphere undergoes a rocking motion, and it becomes necessary to disturb the sphere and reorient it until the desired result is obtained. For this reason, visual observation of the sphere is necessary and a microscope is an essential part of the apparatus.

In this report, the design and theory of operation of a new ferrimagnetic single-crystal sphere orienter are described. Its basic features retain the advantages of the Willoughby-Brown instrument and offer improved accuracy and reliability, increased versatility, and a simpler design which produces an unambiguous result.

II. DESCRIPTION OF APPARATUS

As indicated in both the sketch (Fig. 1) and the photograph (Fig. 2), only one small electromagnet is required. With an air gap of 0.625 inch, manually-pulsed d-c magnetic fields up to 2000 Oe have been obtained, although smaller fields are usually adequate for orientation, particularly with spheres of high saturation magnetization. The magnet is mounted on a chassis made of

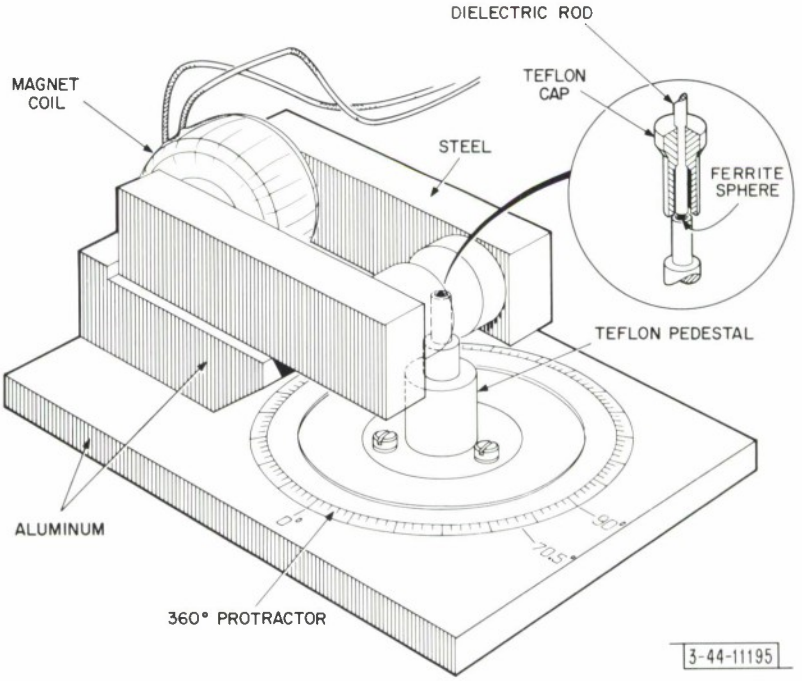

Fig. 1. Sketch of ferrimagnetic single-crystal sphere orienter.

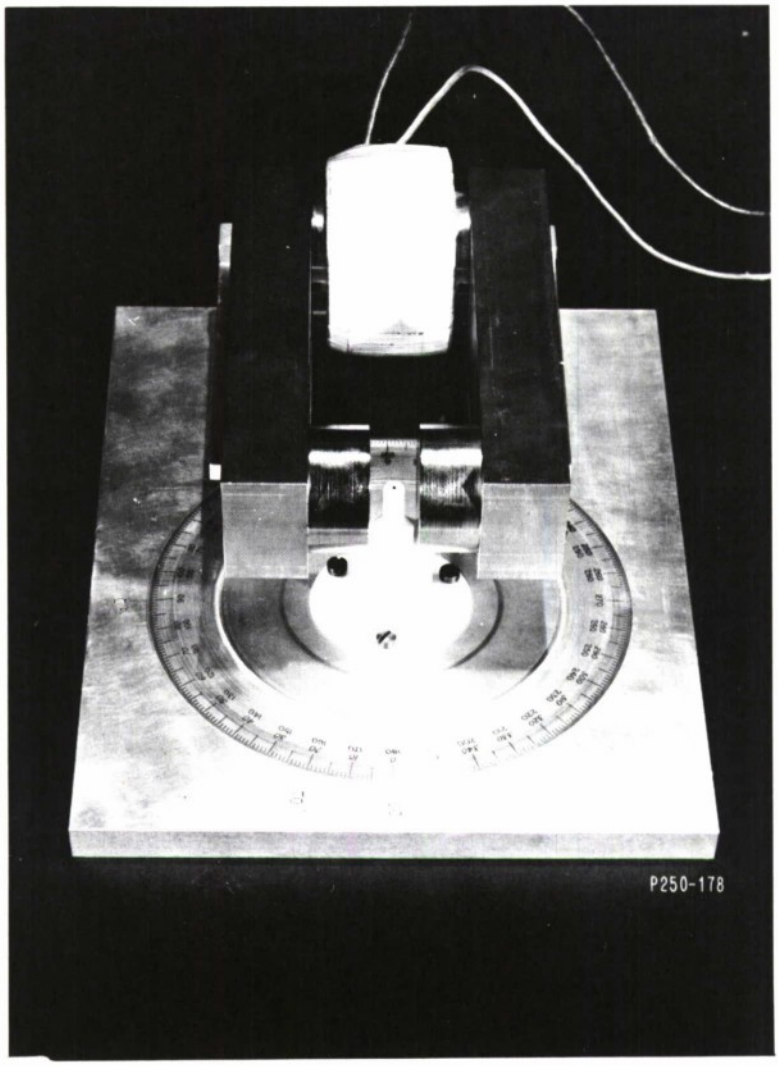

Fig. 2. Photograph of sphere orienter as viewed through the magnet poles.

aluminum and a rotable column of high-density Teflon is situated between the pole faces of the magnet. The polished ferrimagnetic sphere is placed in a small conical depression on top of the Teflon column in such a manner that it is approximately on the axis of the pole faces. Attached to the base of this column is a 360° protractor which is required for positioning the sphere relative to the direction of the field during the orientation procedure.

In order to capture and remove the sphere after orientation, a Teflon cap is placed over the top of the column and a dielectric pick-up rod of the desired dimensions is inserted through an axial hole of the same dimension to make contact with the sphere. By applying a suitable adhesive to the end of the rod, bonding can be made to the sphere, and removal may be effected by withdrawing the rod. In order to permit removal of the sphere, it is obvious that the diameter of the rod must exceed that of the sphere. To insure that the sphere is not disturbed from its alignment during this latter operation, it is recommended that the magnetic field be maintained while the cap and rod are fixed into position.

III. THEORY OF OPERATION

The physical property which permits ferrite spheres with magnetization vector $4\pi\vec{M}_s$ to be crystallographically oriented by application of a magnetic field is referred to as magnetocrystalline anisotropy. For cubic symmetry, the anisotropy energy E_K is given by

$$E_K = K_1 (\alpha_1^2\alpha_2^2 + \alpha_2^2\alpha_3^2 + \alpha_3^2\alpha_1^2)\ldots \quad , \tag{1}$$

where

K_1 = first-order anisotropy constant in ergs-cm^{-3},

$\alpha_1, \alpha_2, \alpha_3$ = direction cosines of $4\pi\vec{M}_s$ with respect to the cubic <100> axes.

For $K_1 < 0$, E_K is a minimum when $4\pi\vec{M}_s$ is parallel to $\langle 111 \rangle$ directions, which are called the easy axes of magnetization. For $K_1 > 0$, the $\langle 100 \rangle$ directions become the easy axes. If $4\pi\vec{M}_s$ is rotated away from an easy axis,

a mechanical torque on the lattice is created, and a physical rotation of the sphere will result when all restraints are overcome. As a result, when an unoriented sphere is placed in a uniform magnetic field, it will immediately rotate to align its closest easy axis parallel to the field.

Since most spheres normally encountered have $K_1 < 0$, the discussion will be confined to this case. In Fig. 3, a sketch of a cubic unit cell is shown to illustrate the location of the four ⟨111⟩ axes and a {110} plane. The angles of intersection between the two pertinent ⟨111⟩ axes are approximately 70.5° and 109.5°. As a result, the sphere can be oriented in a {110} plane by locating any two ⟨111⟩ axes with a magnetic field rotated in a plane. To eliminate any effects of gravity, the plane should be horizontal. When two magnets are used, their poles are placed at 70.5° apart and switched alternately until the two easy axes are in position. In the manner discussed in the preceding section, the sphere may be picked up by a rod along a ⟨110⟩ axis.

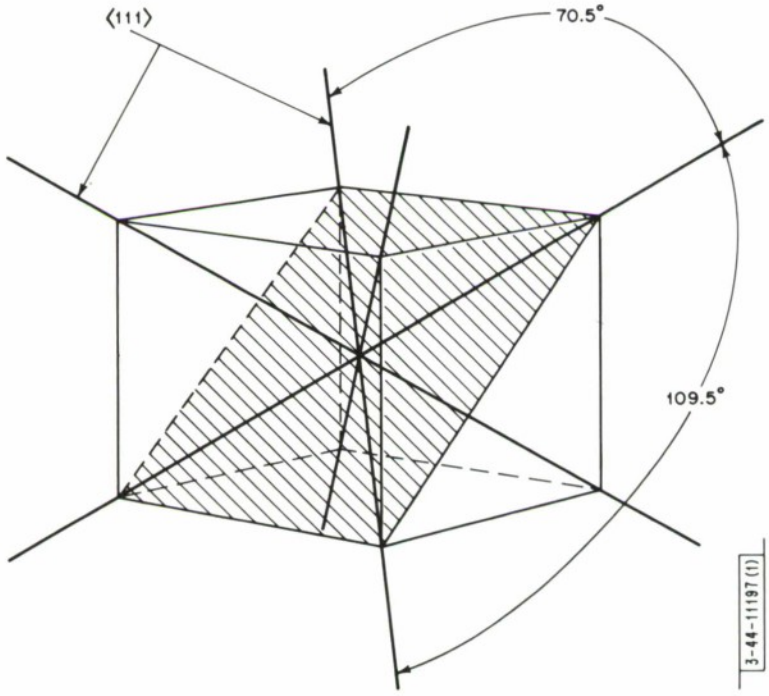

Fig. 3. Sketch of a cubic cell featuring a {110} plane with the ⟨111⟩ body diagonals. The indicated angles of 70.5° and 109.5° represent the angles of intersection of the two ⟨111⟩ axes in the {110} plane of interest.

For the instrument described in this article, only one magnet is employed. In order to alter the direction of the field relative to the sphere, the sphere may be rotated continuously and the field applied at any desired position. The procedure for orientation begins by placing the unoriented sphere on the pedestal and applying the magnetic field to align it along one easy axis. With the field removed, the sphere is then rotated through 70.5°. In this new position, the field is applied and alignment with a second easy axis is obtained. The procedure is repeated for an angle of 109.5° and then alternately for 70.5° and 109.5°, until the sphere no longer responds to the rotations. From observations with a microscope, it is evident that orientation is always completed after five revolutions, with the result that the entire operation may be carried out in less than five minutes.

IV. SENSITIVITY CONSIDERATIONS

From the most elementary examination of the factors which govern the sensitivity of this instrument, it is clear that the basic limitations depend on the magnetocrystalline anisotropy torque T_K and the static friction torque T_μ between the sphere and its support. Of lesser importance are the magnitudes of the magnetization $4\pi\vec{M}_s$ and magnetic field $\vec{H}$ because $\vec{H}$ can usually be made large enough to keep the magnetization aligned at all times. This means that the motion of the sphere will occur when $T_K \geqslant T_\mu$, regardless of the magnitudes of $4\pi\vec{M}_s$ and $\vec{H}$.

For purposes of analysis, it is desirable to express Eq. (1) in terms of the conventional spherical polar coordinates Θ' and φ', where Θ' is the polar angle and φ' the azimuthal angle. With this system, $\alpha_1 = \sin\Theta' \cos\varphi'$, $\alpha_2 = \sin\Theta' \sin\varphi'$, and $\alpha_3 = \cos\Theta'$. If the problem is restricted to the $(1\bar{1}0)$ plane, $\varphi' = \pi/4$ and Eq. (1) may be expressed as

$$E_K = K_1 \left(\frac{1}{4}\sin^4\Theta' + \sin^2\Theta' \cos^2\Theta'\right) \quad . \tag{2}$$

Therefore, the anisotropy torque per unit volume τ_K may be written as

$$\tau_K = -\frac{dE_K}{d\Theta'} \tag{3}$$

$$\tau_K = -K_1 \left(2 \sin\Theta' \cos^3\Theta' - \sin^3\Theta' \cos\Theta'\right) \quad . \tag{4}$$

With reference to the [111] axis, after substituting $\Theta' = 54° \; 45' \pm \Theta$ and taking a small angle approximation,

$$\tau_K = \pm \frac{4}{3} K_1 \Theta \quad . \tag{5}$$

Thus, for the general case, it is reasonable to assume that $|\tau_K| \simeq K_1 \; \Theta$.

For the problem of a sphere resting in a conical hole, there are three T_K thresholds of importance: (1) T_K for rotation about the vertical axis; (2) T_K for rotation about a horizontal axis; and (3) T_K for rolling up the wall of the cone. Each of these situations is analyzed in the Appendix, with the results as follows:

$$\Theta_v = \frac{\mu \rho g a \sin\alpha}{2K_1} \quad , \tag{6}$$

$$\Theta_h = \frac{\mu \rho g a \sin\alpha}{2K_1} \left(\frac{1}{\cos\alpha/2} - \frac{1}{4} \cos\alpha/2\right) \quad , \tag{7}$$

$$\Theta_r = \frac{\rho g a \cos\alpha/2}{K_1} \quad , \tag{8}$$

where

$\Theta_v, \Theta_h, \Theta_r$ = threshold angles for the above three conditions,

μ = coefficient of static friction,

ρ = mass density of the sphere (gm-cm^{-3}),

a = radius of the sphere (cm),

g = acceleration due to gravity (980 cm-sec^{-2}),

α = cone angle.

In practical considerations, it is of prime importance that rolling be prevented. From Eqs. (7) and (8), it may be shown that for $\mu \sim 0.2$ (estimated for polished ferrite on Teflon), then $\Theta_h < \Theta_r$ for values of α less than about 160°. A conclusion which may be reached immediately is that cavities with flat or curved bottoms must be avoided. Another interesting result of this

analysis emerges from the fact that $\Theta_h < \Theta_v$ for α less than 68°, as indicated by Fig. 4. In terms of the total friction torque, T_μ for rotation about a horizontal axis would be less than that for rotation about the vertical axis. If Θ_h is sufficiently lower than Θ_v, the ambiguous situation mentioned earlier and described in Fig. 5 will not arise because the greater sensitivity for a rotation about a horizontal axis will induce the sphere to rotate out of the {110} plane whenever this situation might occur. If it is assumed that the rocking action takes place in a {110} plane, at each application of the magnetic field, the angle between $\vec{H}$ and the nearest easy axis in this plane is 40°. With isotropic sensitivity, the sphere would rotate to align this easy axis with $\vec{H}$. However, it may be shown that at least one other easy axis is within 56°, and since rotations about a horizontal axis are more probable provided that α is sufficiently smaller than 68°, the sphere will rotate about a new axis. After subsequent orientation steps, it eventually reaches equilibrium with a new horizontal {110} plane. If the undesired situation depicted in Fig. 5 is still present,

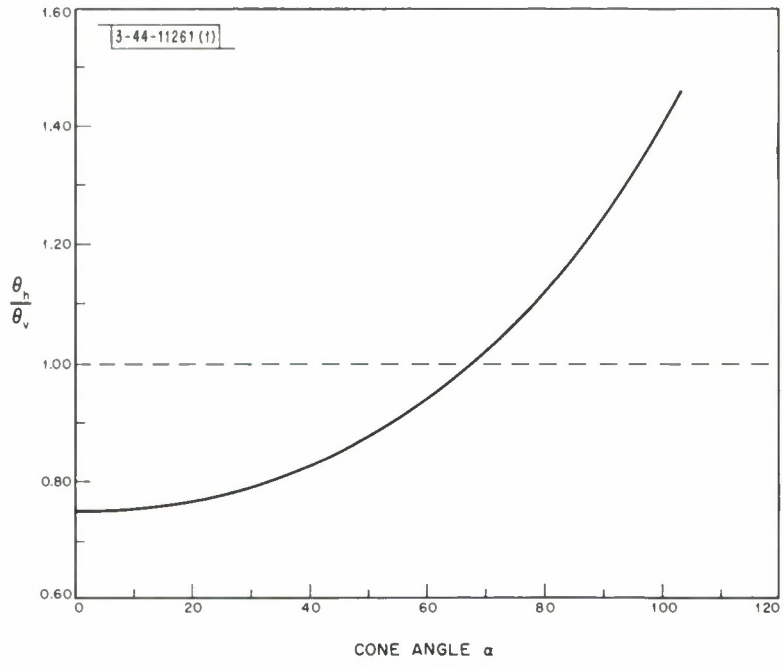

Fig. 4. The ratio of thresholds for rotations about horizontal and vertical axes as a function of cone angle. The crossover occurs at $\alpha = 68°$.

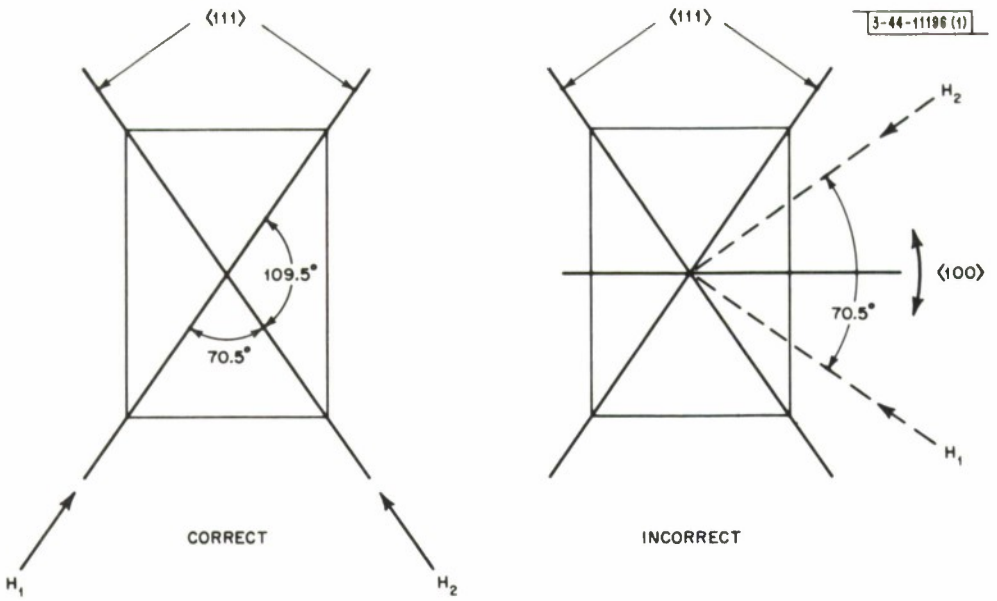

Fig. 5. The origin of the ambiguity observed in sphere orientation procedures when α is large. H_1 and H_2 refer to the two alternate positions of the magnetic field vector relative to the crystallographic axis of the single-crystal sphere.

the reorientation process will continue until final stability is obtained. Normally, any erroneous alignment is corrected very early and the orientation is completed after only a few steps.

V. RESULTS

To evaluate the instrument, several polished single-crystal spheres were used, some of which are listed in Table I. From Eqs. (6) and (7), it may be concluded that α should be as small as possible for optimum sensitivity and a value of 45° was finally adopted. For purposes of checking the effect of sphere size, $Y_3Fe_5O_{12}$ spheres of 20, 40, and 80 mils diameter were included in the study. In addition, a $Y_3Ga_{0.65}Fe_{4.35}O_{12}$ sphere of lower K_1 and a $Li_{0.5}Fe_{2.5}O_4$ sphere of higher K_1 were examined.

Because the instrument was designed for 40-mil-diameter spheres, the 20- and 80-mil YIG spheres were not mounted for x-ray examination. However, microscope observations presented in Table I indicate that the dependence

TABLE I

ORIENTATION DATA FOR SELECTED FERRIMAGNETIC SPHERES

Composition	$4\pi M_s$ (gauss)	K_1 (ergs-cm^{-3} × 10^3)	d (= 2a) (mils)	Limits of Errors from ⟨110⟩ Axes Microscope	X-ray
$Y_3Fe_5O_{12}$	1780	6	20	±1°	–
$Y_3Fe_5O_{12}$	1780	6	80	±4°	–
$Y_3Fe_5O_{12}$	1780	6	40	±2°	±2°
$Y_3Ga_{0.65}Fe_{4.35}O_{12}$	800	3	40	±2°	±2.5°
$Li_{0.5}Fe_{2.5}O_4$	3750	90	40	~0°	±0.75°

of sensitivity on size is in general accord with the theory. From the results of x-ray examinations on the $Y_3Fe_5O_{12}$, $Y_3Ga_{0.65}Fe_{4.35}O_{12}$, and $Li_{0.5}Fe_{2.5}O_4$ spheres, it is evident that a small error is introduced during the capture operation. This effect is most clearly reflected in the result for the lithium ferrite sphere, where virtually no error was observed under the microscope, while a 0.75° deflection was found from x-ray analysis.

In general, little difficulty was encountered in obtaining orientations within the limits indicated. With the cone angle α at 45°, there has been no evidence of the ambiguity described earlier, although this situation did develop when angles of 90° and greater were used. Finally, attempts to use cylindrical and hemispherical cavities proved to be futile because of the rolling effect discussed previously.

VI. CONCLUSIONS

An improved ferrimagnetic single-crystal sphere orientation device has been constructed and successfully demonstrated. Several spheres have been oriented along ⟨110⟩ axes with good accuracy and excellent repeatability.

In comparison with previously reported sphere orienters, this instrument has several important advantages. It is simpler in construction, more convenient to operate, and more accurate than the Auer device[1]. These statements also could apply to the Sato-Carter instrument,[2] particularly with regard to the sensitivity of orienting small spheres. As pointed out by Eqs. (6) and (7), the sensitivity should be greater for smaller spheres. However, with this latter instrument, for the second rotation necessary to achieve ⟨110⟩ orientation, an additional mass is attached to the sphere in the form of a rod. In terms of the theory developed in this article, this rod increases the effective mass of the sphere without changing the anisotropy torque. As a result, it is important to keep the percentage of magnetic mass as high as possible and larger spheres would be expected to align more accurately.

Although the switched-field method of Willoughby and Brown[3] offers comparable accuracy (i.e., ±1° for a 23-mil sphere as compared with ±2° for a 40-mil sphere), the new instrument is more reliable because of the removal of the alignment ambiguity. Another potential problem of this earlier device

arises from the use of a sapphire watch jewel as the support for the sphere. Since the walls of this cavity are curved (as opposed to the linearity of the more desirable conical design), the probability of rolling should be significant. As mentioned earlier, this effect has been eliminated by selection of a small cone angle. Finally, it must be pointed out that although the use of a microscope is desirable with the new instrument, it is no longer a necessity. If the surfaces of the sphere and mount are clean and the ammeter of the electromagnet indicates the desired current level, orientation can be carried out reliably without visual observation.

ACKNOWLEDGMENTS

The authors wish to express their gratitude to D. H. Temme for his interest in the project and for many helpful suggestions. In addition, a debt is owed to E. L. Mastromattei for x-ray analysis work required to verify orientation accuracy. Finally, the authors gratefully thank D. C. Cook, H. H. Champigny, R. J. Kelley, and Mrs. P. J. Paul for assistance in a variety of tasks.

REFERENCES

1. M. Auer, IRE Trans., Microwave Theory and Techniques, MTT-10, 88 (1962).
2. Y. Sato and P. S. Carter, IRE Trans., Microwave Theory and Techniques, MTT-10, 611 (1962).
3. R. E. Willoughby and J. Brown, Jr., IEEE Trans., Microwave Theory and Techniques, MTT-12, 385 (1964).

APPENDIX

To determine the theoretical sensitivity of this instrument, it is necessary to examine the mechanics of a sphere rotating in a conical cavity. For this situation, there are three critical values of Θ, the angle between $4\pi\vec{M}_s$ and the easy axis: (a) Θ_v, the minimum angle for rotation about a vertical axis, (b) Θ_h, the minimum angle for rotation about a horizontal axis, and (c) Θ_r, the minimum angle for rolling up the side of the cone. These three cases will be considered in order.

A. ROTATION ABOUT THE VERTICAL AXIS

In Fig. 6, the sphere of radius a and density ρ is presented as resting in a conical cavity of angle α. The coefficient of static friction between the two

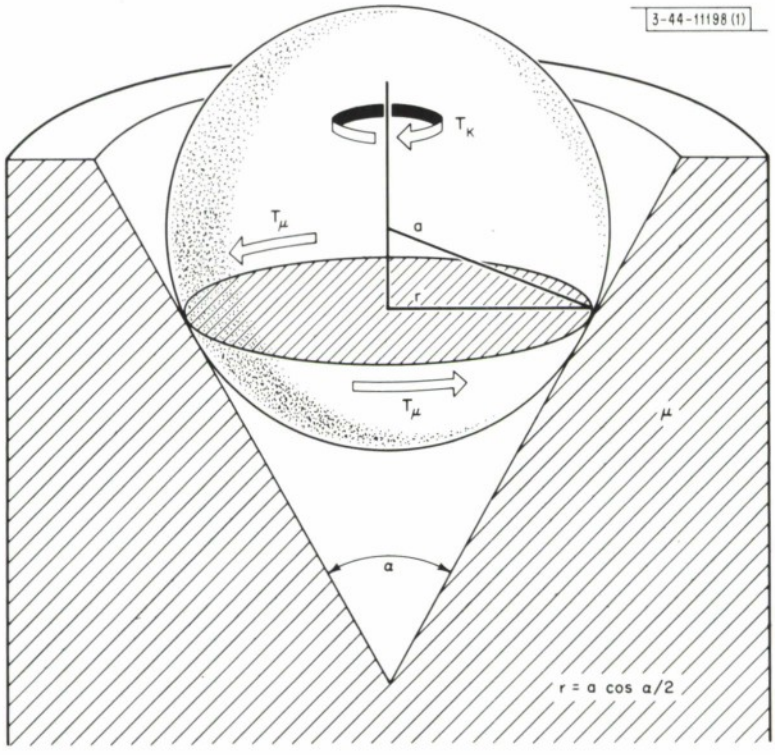

Fig. 6. Mechanics of the vertical axis rotation for a sphere in a cone under the influence of torque T_K.

surfaces is represented by μ. To produce rotation, the magnetic anisotropy torque T_K must exceed the torque of static friction T_μ. From Eq. (5)

$$\tau_K \approx K_1 \Theta \tag{A1}$$

per unit volume. Thus, the total torque equals $\tau_K \times$ volume, or

$$T_K \approx K_1 \Theta \left(\frac{4}{3}\pi a^3\right) \quad . \tag{A2}$$

The total friction torque may be written as

$$T_\mu = \mu \, mg \sin\alpha/2 \cdot r \quad , \tag{A3}$$

where m = mass of the sphere and g = acceleration due to gravity. After substituting $r = a \cos\alpha/2$ and $m = 4/3\, \pi a^3 \rho$, Eq. (A3) becomes

$$T_\mu = \frac{\mu\rho g}{2} \left(\frac{4}{3}\pi a^3\right) a \sin\alpha \quad . \tag{A4}$$

Since the condition for rotation requires that $T_K \geqslant T_\mu$, the sensitivity limitation may be given by

$$\Theta_v \geqslant \frac{\mu\rho g}{2K_1} a \sin\alpha \quad . \tag{A5}$$

B. ROTATION ABOUT A HORIZONTAL AXIS

For the case of T_K applied about a horizontal axis, as shown in Fig. 7, it is appropriate to employ the principle of virtual work, since the friction torque T_μ varies along the line of contact.

If a virtual rotation $\Delta\beta$ is considered, the virtual work done by T_K becomes

$$\Delta W_K = T_K \cdot \Delta\beta \quad . \tag{A6}$$

Since the friction force per unit length is given by

$$f_\mu = \frac{\mu mg \sin\alpha/2}{2\pi r} \quad , \tag{A7}$$

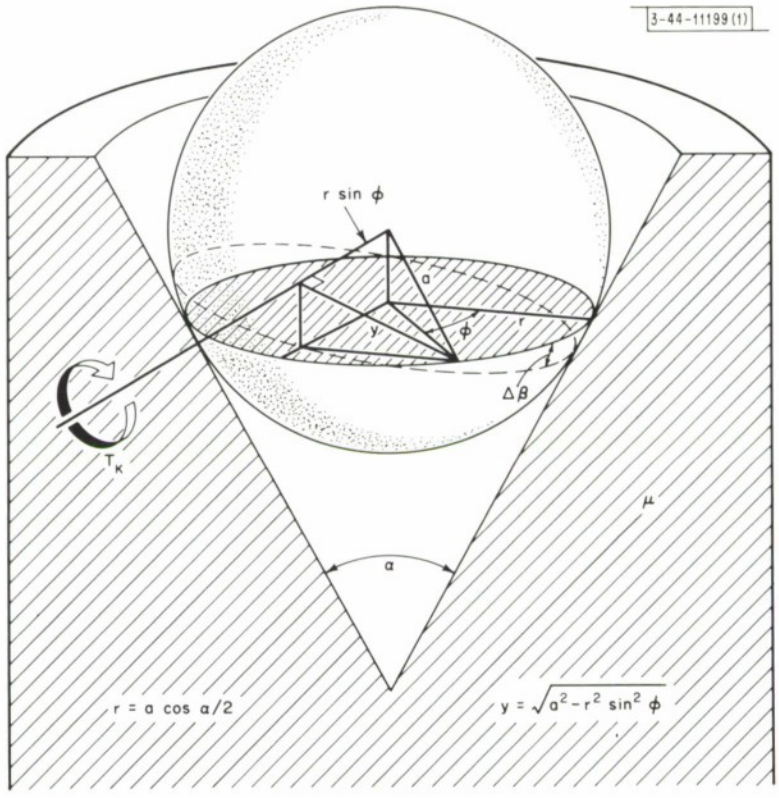

Fig. 7. Mechanics of a horizontal axis rotation for a sphere in a cone under the influence of torque T_K.

the work done by a length $r d\varphi$ may be written as

$$dW_\mu = \frac{\mu mg \sin\alpha/2}{2\pi} \cdot y\Delta\beta \, d\varphi \quad , \tag{A8}$$

where

$$y = \sqrt{a^2 - r^2 \sin^2\varphi}$$

and

$$r = a \cos\alpha/2 \quad .$$

Thus, the total virtual work done by friction forces may be expressed as

$$\Delta W_\mu = 4\Delta\beta \cdot \frac{\mu mg \sin\alpha/2}{2\pi} \, a \int_0^{\pi/2} \sqrt{1 - k^2 \sin^2\varphi} \, d\varphi \quad , \tag{A9}$$

where $k = \cos\alpha/2$.

Since the above equation contains a complete elliptic integral of the second kind,

$$\int_0^{\pi/2} \sqrt{1 - k^2 \sin^2 \varphi \, d\varphi} \approx \frac{\pi}{2} (1 - \frac{1}{4} k^2 - \frac{3}{64} k^4 - \cdots) \quad , \tag{A10}$$

Eq. (A9) may be expressed as

$$\Delta W_\mu \approx \Delta\beta \cdot \mu mga \sin\alpha/2 \; (1 - \frac{1}{4} \cos^2 \alpha/2 - \cdots) \quad . \tag{A11}$$

By the principle of virtual work, $\Delta W_K = \Delta W_\mu$ and from Eqs. (A2) and (A6)

$$\Theta_h = \frac{\mu\rho ga \sin\alpha}{2K_1} (\frac{1}{\cos\alpha/2} - \frac{1}{4} \cos\alpha/2 - \cdots) \quad , \tag{A12}$$

or

$$\Theta_h = \Theta_v (\frac{1}{\cos\alpha/2} - \frac{1}{4} \cos\alpha/2 - \cdots) \quad . \tag{A13}$$

C. ROLLING UP WALL OF CAVITY

In Fig. 8, this final situation is presented as a sphere on an inclined plane, since it is essentially a two-dimensional problem.

From an analysis of forces parallel to the surface of the plane,

$$m \frac{du}{dt} = f_\mu - mg \cos\alpha/2 \quad , \tag{A14}$$

where μ is the translational velocity parallel to the plane and f_μ the force of friction.

By balancing moments about the axis through the center of the sphere,

$$I \frac{d\omega}{dt} = -f_\mu a - T_K \quad , \tag{A15}$$

where I is the moment of inertia and ω, the angular velocity. Since $d\omega/dt = 1/a \, (du/dt)$ and $I = 2/5 \, ma^2$, Eq. (A15) may be written as

$$f_\mu = \frac{2}{5} m \frac{d\omega}{dt} + \frac{T_K}{\alpha} \quad . \tag{A16}$$

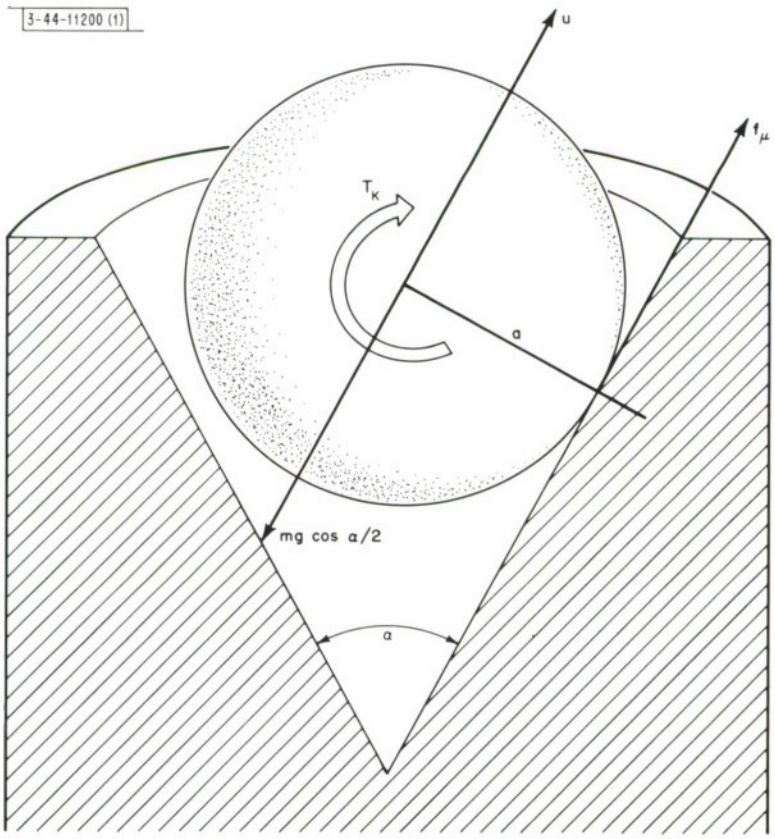

Fig. 8. Mechanics of the rolling of a sphere up the wall of a cone under the influence of torque T_K.

After substituting for f_μ from Eq. (A16) into Eq. (A14), one obtains

$$\frac{du}{dt} = \frac{5}{7m}\left(\frac{T_K}{a} - mg\cos\alpha/2\right) \quad . \tag{A17}$$

Thus, to produce rolling,

$$\frac{du}{dt} \geqslant 0$$

and

$$T_K \geqslant mg\ a\ \cos\alpha/2$$

or

$$\Theta_r \geqslant \frac{\rho g}{K_1}\ a\ \cos\alpha/2 \quad . \tag{A19}$$

DOCUMENT CONTROL DATA – R&D

(Security classification of title, body of abstract and indexing annotation must be entered when the overall report is classified)

1. ORIGINATING ACTIVITY *(Corporate author)* Lincoln Laboratory, M. I. T.	2a. REPORT SECURITY CLASSIFICATION Unclassified 2b. GROUP None

3. REPORT TITLE

Improved Ferrimagnetic Single-Crystal Sphere Orienter

4. DESCRIPTIVE NOTES *(Type of report and inclusive dates)*

Technical Note

5. AUTHOR(S) *(Last name, first name, initial)*

Dionne, Gerald F. Crocker, Phillip S. Smith, James F.

6. REPORT DATE 17 July 1968	7a. TOTAL NO. OF PAGES 26	7b. NO. OF REFS 3
8a. CONTRACT OR GRANT NO. AF 19(628)-5167 b. PROJECT NO. ARPA Order 498 c. d.	9a. ORIGINATOR'S REPORT NUMBER(S) Technical Note 1968-16 9b. OTHER REPORT NO(S) *(Any other numbers that may be assigned this report)* ESD-TR-68-227	

10. AVAILABILITY/LIMITATION NOTICES

This document has been approved for public release and sale; its distribution is unlimited.

11. SUPPLEMENTARY NOTES None	12. SPONSORING MILITARY ACTIVITY Advanced Research Projects Agency, Department of Defense

13. ABSTRACT

A new ferrimagnetic single-crystal sphere orientation device has been developed for use with a variety of sphere sizes and compositions. Similar to other instruments which operate on a magnetic principle, this orienter provides ⟨110⟩ axes alignments. However, with one small electromagnet, it is considerably simpler than previously reported instruments of this type. From theoretical considerations, it is concluded that high alignment sensitivity will be obtained for polished spheres of low mass density, small radius, high magneto-crystalline anisotropy, and low coefficient of friction between sphere and support. It is also concluded that the sphere should be supported in cavities of conical geometry, with the cone angle as small as possible. The results of both x-ray analysis and microscope visual observation with a number of typical spheres indicate that the combination of accuracy and reliability of the instrument is superior to that of the other devices and suggests that the factors controlling the alignment sensitivity as derived from theory are at least qualitatively correct.

14. KEY WORDS

sphere orienter
ferrimagnetism
single crystals
theory of sphere rotations in a cone