AD

AD 671637

Report 1928

EXPERIMENTAL MODEL, MARGINAL-TERRAIN ASSAULT BRIDGE AND ARMORED PERSONNEL CARRIER TRANSPORTER AND LAUNCHER

by

Gerald F. Wilber

April 1968

This document has been approved for public release and sale; its distribution is unlimited.

U. S. ARMY MOBILITY EQUIPMENT RESEARCH AND DEVELOPMENT CENTER

FORT BELVOIR, VIRGINIA

D D C
RECEIVED
JUL 18 1968
C

Reproduced by the
CLEARINGHOUSE
for Federal Scientific & Technical
Information Springfield Va 22151

86

ACCESSION for
CFSTI W. ITE SECTION ☑
DDC
UNANNOUNCED
JUSTIFICATION
BY
DISTRIBUTION/AVAILABILITY CODES
DIST. AVAIL. and/or SPECIAL
/

Destroy this report when no longer needed. Do not return it to the originator.

The findings in this report are not to be construed as an official Department of the Army position unless so designated by other authorized documents.

Citation of trade names in this report does not constitute an official indorsement or approval of the use of such commercial hardware or software.

U. S. ARMY MOBILITY EQUIPMENT
RESEARCH AND DEVELOPMENT CENTER
FORT BELVOIR, VIRGINIA

Report 1928

EXPERIMENTAL MODEL, MARGINAL-TERRAIN ASSAULT BRIDGE AND ARMORED PERSONNEL CARRIER TRANSPORTER AND LAUNCHER

Task 1G643324D59503

April 1968

Distributed by

The Commanding Officer
U. S. Army Mobility Equipment Research and Development Center

Prepared by

Gerald F. Wilber
Marine and Bridge Division
Military Technology Laboratory

This document has been approved for public release and sale; its distribution is unlimited.

SUMMARY

This report presents information on an experimental model of a lightweight, short-span, marginal-terrain assault bridge and transporting launcher. The model tested is a 33-foot bridge span transported and launched by an M-113 Armored Personnel Carrier.

The bridge was designed to carry up to Class 15 wheeled or tracked loads across wet or dry gaps up to the full 36-foot length of the bridge.

The launcher was designed to accompany an armored column through marginal terrain and to place the bridge when needed.

The results of this test of the experimental model show that the basic concept of a lightweight, short-span, highly mobile assault bridge is valid.

FOREWORD

This project was initiated using the Technical Director's In-House Research Fund and was eventually validated as an ENSURE requirement by the Assistant Chief of Staff for Force Development (ACSFOR).

The project was conducted by the Bridge Branch, Marine and Bridge Division, Military Technology Laboratory, from September 1965 through August 1967.

The following personnel were directly involved in this project:

Richard W. Helmke, Project Engineer
Sabino W. Romano, Civil Engineer
Gerald F. Wilber, Engineering Technician
James R. Hess, Bridge Equipment Test Operator.

CONTENTS

Section	Title	Page
	SUMMARY	ii
	FOREWORD	iii
	ILLUSTRATIONS	v
	TABLES	vii
I	INTRODUCTION	
	1. Subject	1
	2. Background	1
II	INVESTIGATION	
	3. Description of Equipment	2
	4. Test Procedure	8
	5. Bridge and Launcher Test Methods	11
	6. Test Results	31
III	CONCLUSIONS	
	7. Conclusions	71
	APPENDIX	73

ILLUSTRATIONS

Figure	Title	Page
1	Overall View of Bridge Set Up for Dynamic Traffic Test	3
2	Typical Tread Cross-Section	4
3	Two-Centered, Noneccentric Hinge	5
4	Folding Mechanism	6
5	Launching Mechanism Instrumented for Dynamic Testing	7
6	Hydraulic Power Unit Installation and Controls	9
7	External Piping and Hydraulic Test Gages	10
8	Bridge Under Static Loading	13
9	Bridge Under Dynamic Loading	14
10	Load Position 1	15
11	Load Position 2	16
12	Load Position 3	17
13	Load Position 4A	18
14	Load Position 4B	19
15	Recording Deflection at Centerline of Bridge for Load Position 1	20
16	Five-Ton Bridge Truck, Class 22	21
17	Launcher Attached to Bridge	22
18	Launcher Retrieving Bridge	23

ILLUSTRATIONS (cont'd)

Figure	Title	Page
19	Launcher with Bridge at Vertical While Retrieving	24
20	Launcher with Bridge in Carrying Position	25
21	Static Floating Attitude Without Ballast or Surfboard-Float	26
22	Unit at Full Speed Using Combination Surfboard-Float	27
23	Exit From Water Up Sharp Incline	29
24	Launcher with Bridge Negotiating a 50-Percent Grade	30
25	Modified Link Beam Mount	48
26	Final Hinge Arrangement	49
27	General Data	51
28	Final Surfboard-Float Arrangement	54
29	Failure of Right-Side Launching Beam After 448 Cycles	59
30	Revised Launching Beam	60
31	Racking of Mechanism Caused by Failure of Launching Beam	62
32	Bending of Crossbeam End Plate and Trunnion Pin	63
33	Bolted Side Mount (Left Side)	67
34	Welded Side Mount (Right Side)	68
35	Strain Gage Locations	69
36	The M-113A1 Launcher, Without Bridge, at Full Speed	70

TABLES

Table	Title	Page
I	Stresses for Load Position 1	32-33
II	Stresses for Load Position 2	34-35
III	Stresses for Load Position 3	36-37
IV	Stresses for Load Position 4(a)	38-39
V	Stresses for Load Position 4(b)	40-41
VI	Midspan Deflections	42
VII	Dynamic Stresses	43-45
VIII	Bridge, Dynamic-Launching Stresses	47
IX	Launching Mechanism Dynamic Stresses	55-57
X	Dynamic, Side-Mount Stresses (M-113A1 Launcher)	64-65

EXPERIMENTAL MODEL, MARGINAL-TERRAIN ASSAULT BRIDGE AND ARMORED PERSONNEL CARRIER TRANSPORTER AND LAUNCHER

I. INTRODUCTION

1. Subject. This report covers the results of an applied research investigation of a lightweight, short-span, highly mobile, armored-vehicle-launched bridge and companion launcher.

2. Background. The increased mobility of today's Army has dictated the use of lightweight equipment and the reduction in size of mobile equipment. Lighter vehicles have reduced ground pressures and thus have a marginal-terrain operating capability. However, gap crossing is still a problem that must be answered. At the present state-of-the-art, bridging still seems to be the best answer if the bridge can be successfully transported and quickly placed without unduly jeopardizing safety. A unit with this ability could be either a wheeled bridge or a lightweight substitute for the present M-60 Armored Vehicle Launched Bridge (AVLB).

A feasibility study was conducted to determine if such an item was practical. Introduction in 1963 by the lightweight metals industry of the 7000 series high-strength, weldable, natural aging aluminum alloys and the development of lightweight military vehicles indicated that a small AVLB was a possibility. Military and technical characteristics were formulated (Appendix) and a preliminary design was initiated.

Several launching vehicles were investigated including the M551 (AR/AAV), the universal engineer tractor, the M-113 armored personnel carrier (APC), and a trailer-mounted launcher.

Bridge designs investigated were a foam-core box structure, a tapered-honeycomb box structure, an expanded-vinyl-core box structure, and an extruded orthotropic-plate deck, open-box structure.

The feasibility study concluded that a small AVLB was practical and that a bridge could be successfully mounted on an M-113 APC and attain the proposed characteristics.

II. INVESTIGATION

3. Description of Equipment. The equipment is described as follows.

a. Bridge. The bridge has a length of 36 feet, center-to-center of the end tubes, and can be used to carry Class 15 loads over gaps up to 35 feet if rigid bearing is available. It has a width of 105-1/8 inches and consists of four tread sections which are connected by vertical and horizontal cross bracing and are hinged at the center (Fig. 1). The bridge folds to a length of 18 feet in the travel position and weighs 2750 pounds.

Each tread is constructed of two welded-box tension chords of 7039-T61 aluminum, flat-sheet webs of 7039-T61 aluminum, and an extruded deck panel of 6061-T6 aluminum, all connected by welding (Fig. 2). The deck panel extrusion has a cross section in the shape of a Warren truss. Two such sections were welded together and cut to size to form the decking of each tread. This configuration has stiffness in two directions.

The heat-treated 4340 steel hinge is a double-centered, noneccentric unit which provides 180 degrees of rotation, 90 degrees about each pin (Fig. 3). The pins are also heat-treated 4340 steel and are self-lubricated by a polytetrafluoroethylene coating (Teflon)*.

The folding mechanism is a three-link arrangement actuated by a 3-1/2-inch bore, 36-inch stroke hydraulic cylinder (Fig. 4). The compression link provides the proper mechanism configuration during actuation and expands through part of the cycle.

All component parts of the bridge are bolted together, and all rotational joints use Teflon-coated* 4340 steel pins.

b. Launcher. The bridge-launching mechanism is mounted on a standard M-113 APC. Modifications to the vehicle have been held to a minimum to insure that conversion to a launcher or back to a troop carrier can be accomplished with a minimum of effort.

Six pin joints welded to the hull provide the attachment points for an over-center mechanism capable of 190 degrees of rotation (Fig. 5). The mechanism is fabricated of welded 7039-T61 aluminum plate,

* DuPont trademark.

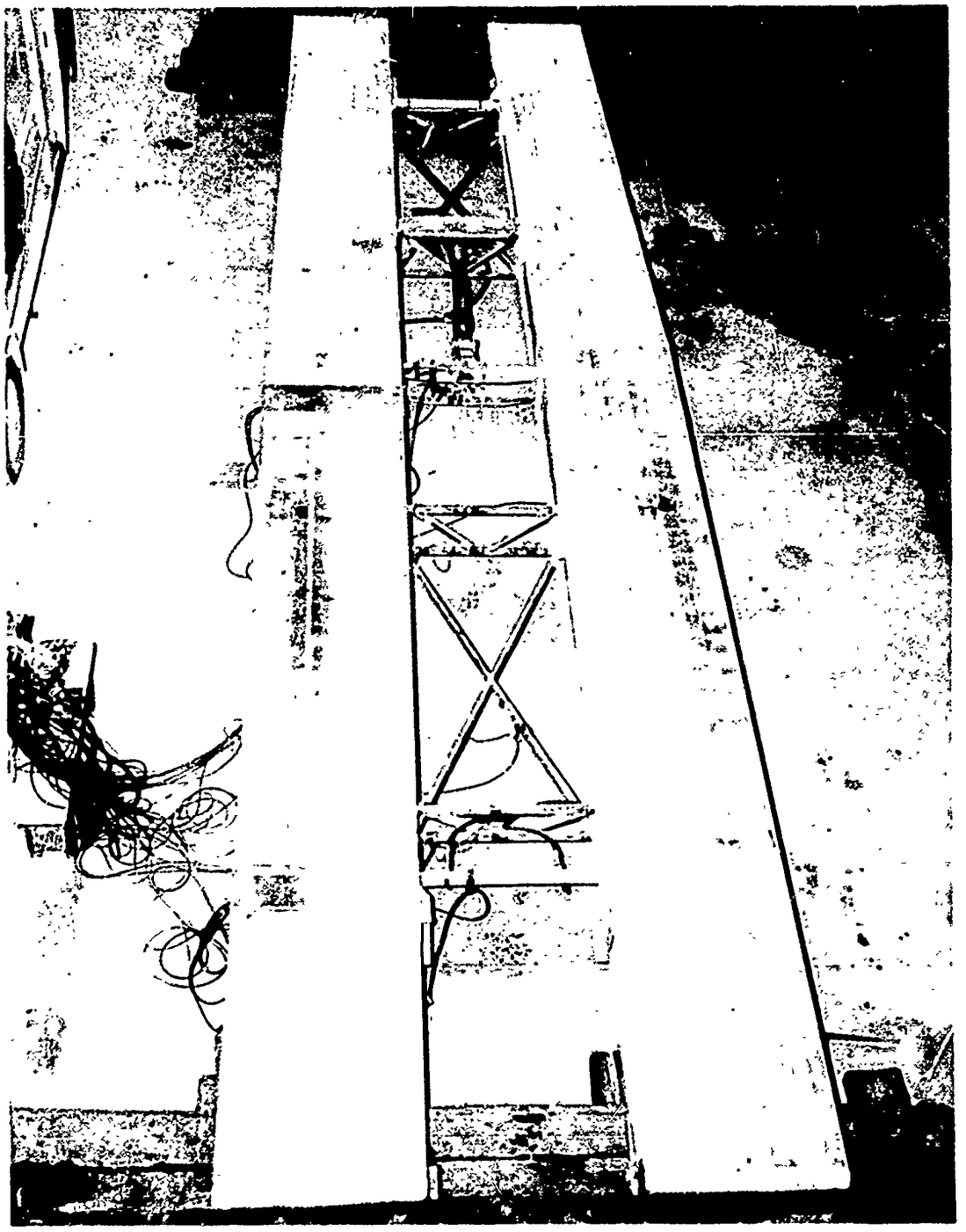

N8903

Fig. 1. Overall view of bridge set up for dynamic traffic test.

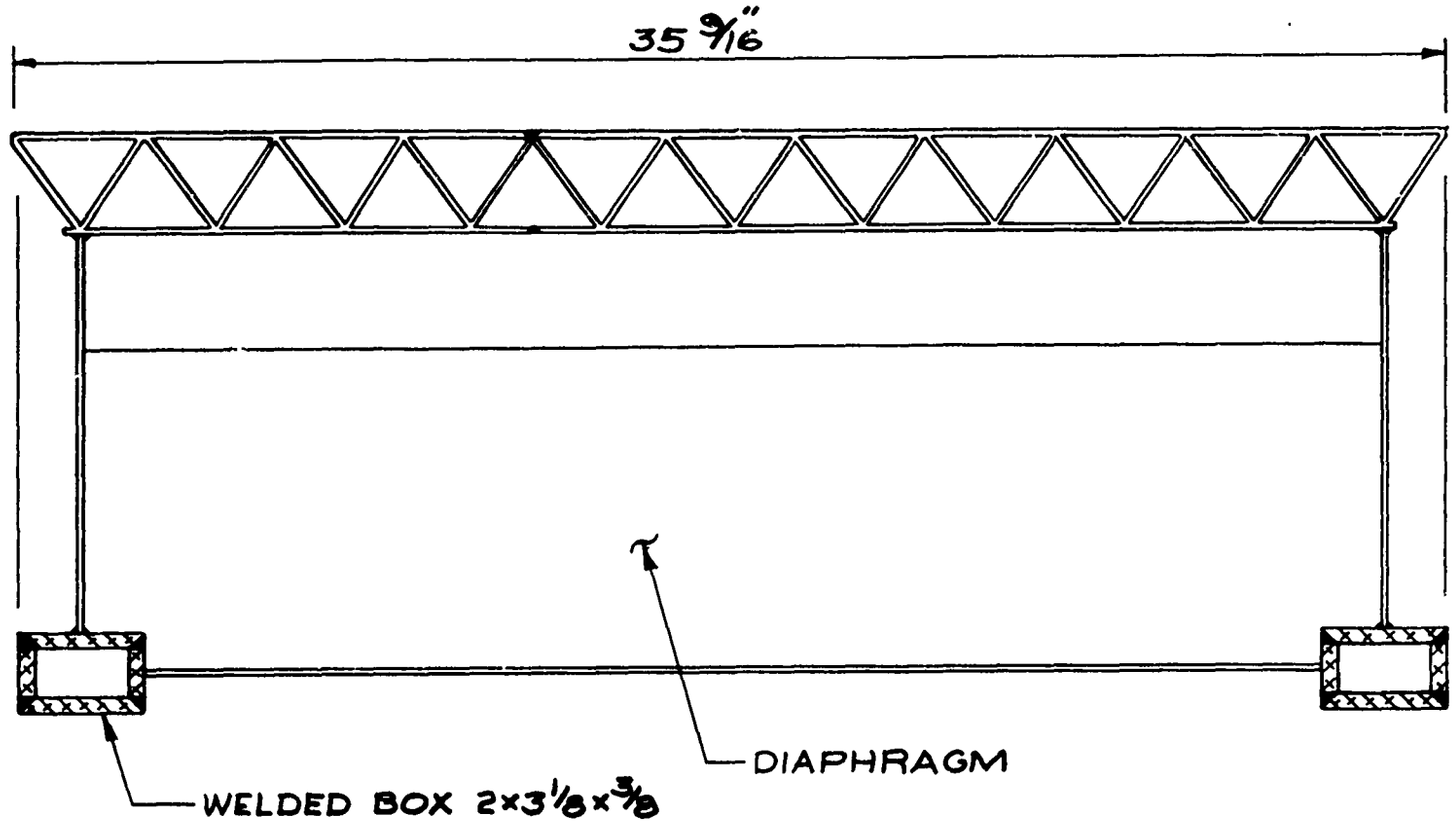

Fig. 2. Typical tread cross-section.

N8581

Fig. 3. Two-centered, noneccentric hinge.

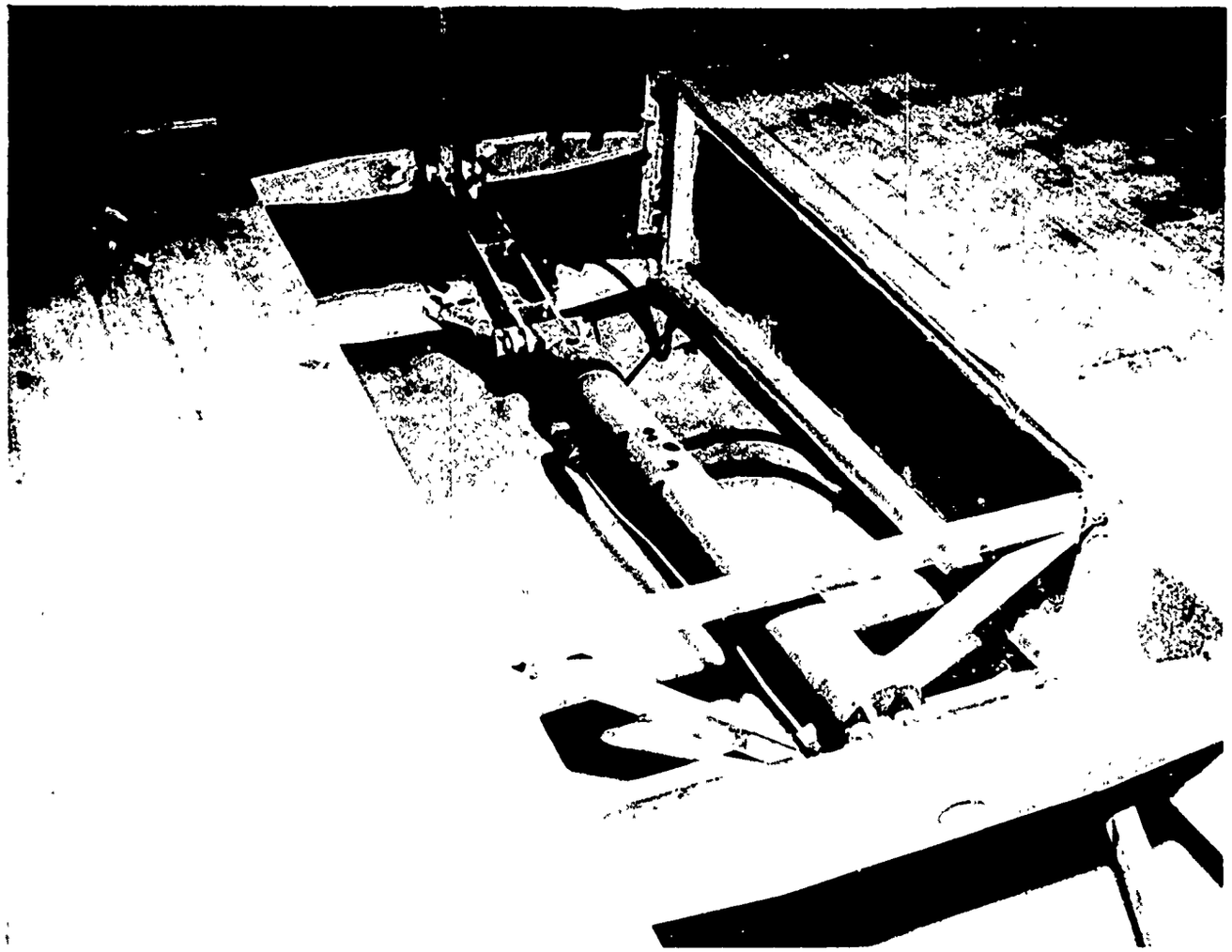

N8898

Fig. 4. Folding mechanism (note the hydraulic cylinder and the three-link arrangement).

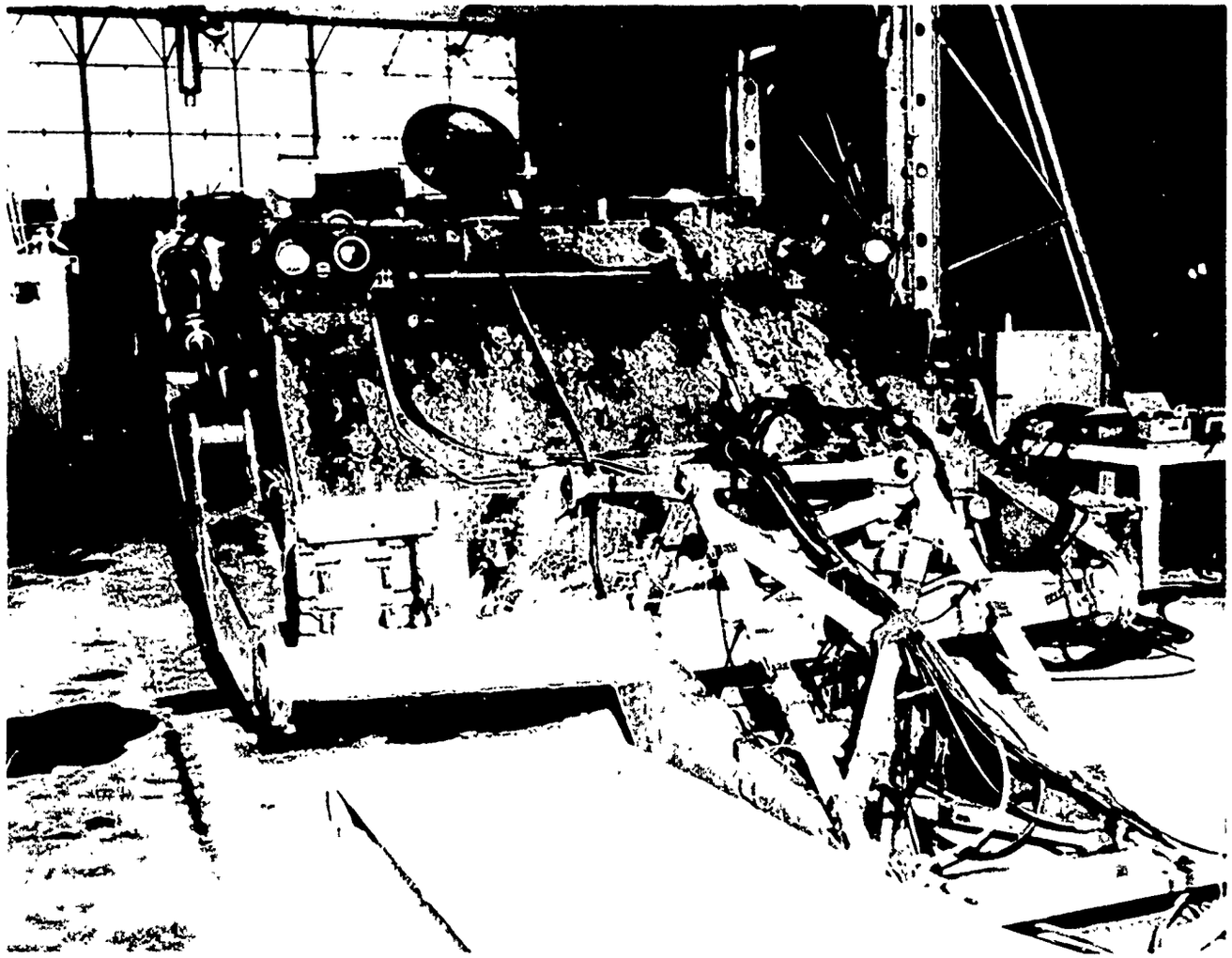

P1775

Fig. 5. Launching mechanism instrumented for dynamic testing.

joined at the rotation points by Martin hard-coated* 7075-T6 aluminum pins, and actuated by two 6-1/2-inch bore, 22-3/4-inch stroke cylinders, one on each side of the vehicle. Each cylinder has an aluminum head and cap and a steel rod, barrel, piston, and clevis. The seals are an "O" ring type with backup washer.

All rotational points have bronze bushings which are chrome-plated on the surface that mates with the aluminum.

The hydraulic system is a self-contained, module-type unit including reservoir, filter, pump, control valves, and relief valves (Fig. 6). Power to drive the pump is taken from the transfer-case power takeoff and is transmitted to the pump through a double, cardon-jointed propeller shaft. Hydraulic lines are routed through the existing, right, forward, antenna-mast base hole and to their respective attachment points (Figs. 6 and 7).

The launching mechanism is controlled from the commander's position by three manual-control valves: a launch-cylinder control which operates the launching mechanism, a bridge-cylinder control which unfolds the bridge, and a lock-cylinder control which pins the launching mechanism to the bridge.

4. Test Procedure. The overall plan of test was to subject the unit to as many operating conditions as possible to establish compliance with the technical and military characteristics. Failures or areas of weakness would be re-evaluated, modified, and retested. Tests were as follows:

a. Weight.

(1) Component parts.

(2) Subassemblies.

(3) Complete assemblies.

b. Swim Capability.

(1) Without bridge.

(2) With bridge.

* Martin Aircraft Corporation tradename.

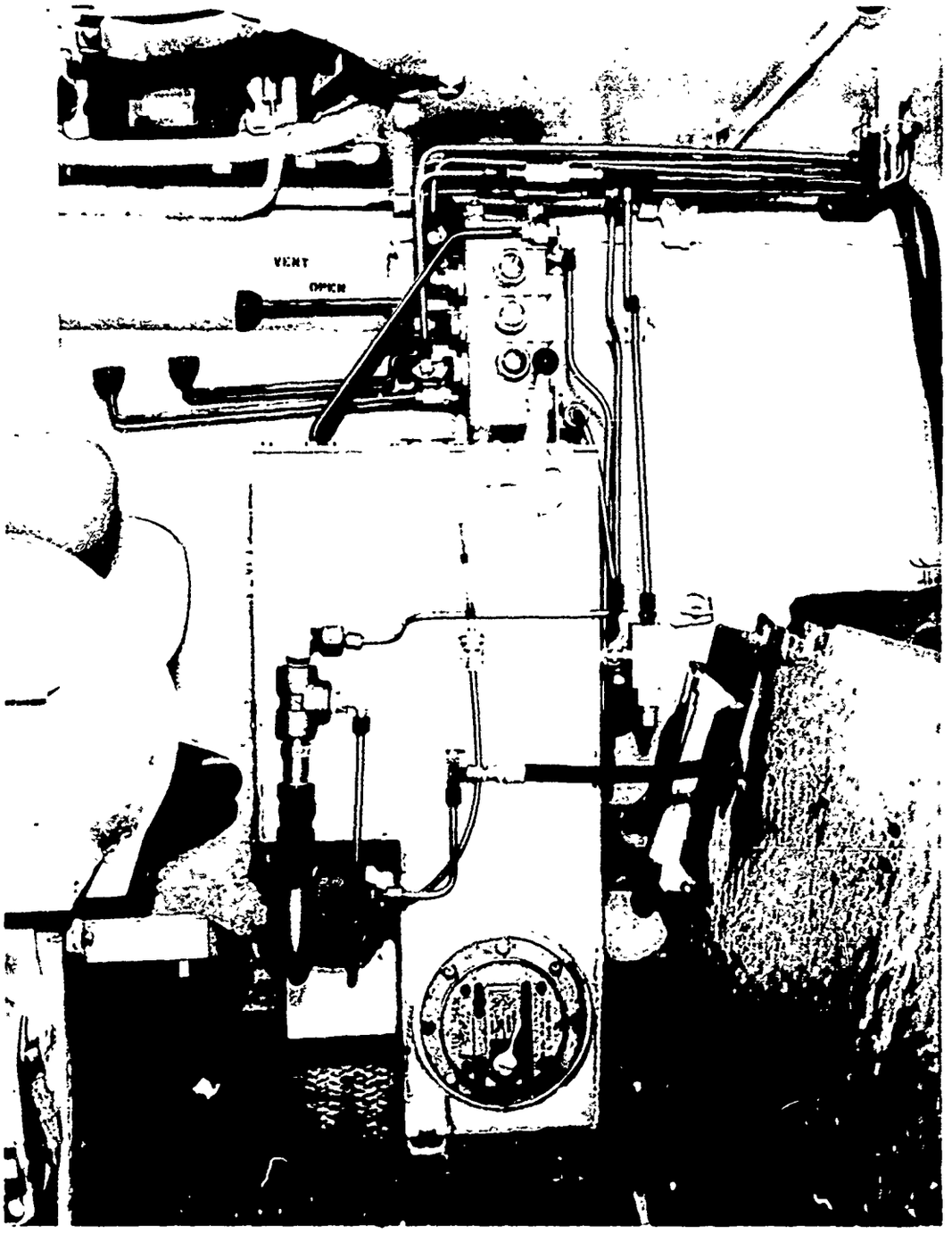

P7707

Fig. 6. Hydraulic power unit installation and controls.

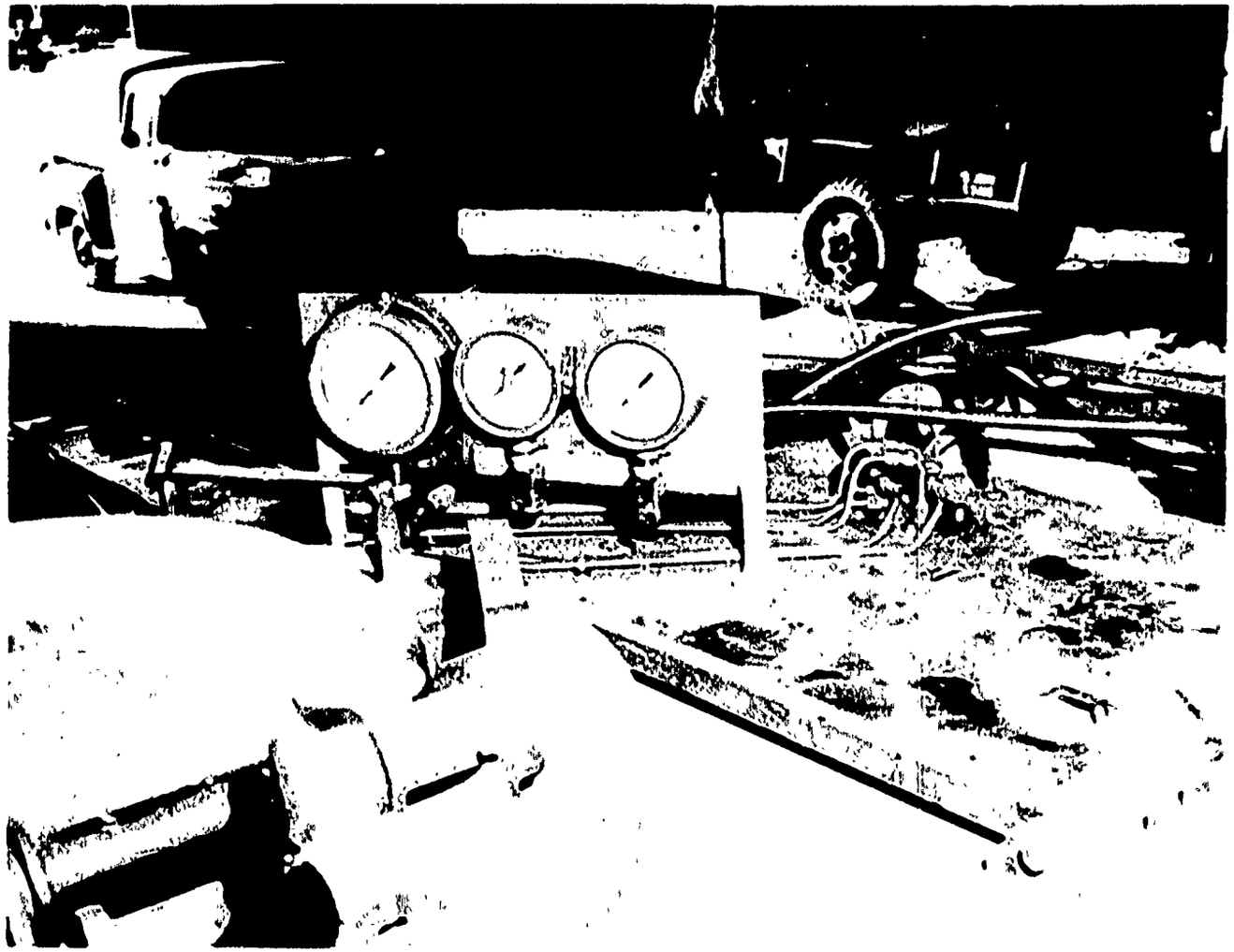

P1776

Fig. 7. External piping and hydraulic test gages.

(3) Water entry.

(4) Water exit.

c. Hydraulic Circuit.

(1) Static pressures.

(2) Dynamic pressures.

(3) Flow regulators.

(4) Relief valves.

(5) Operating temperatures.

(6) Operating speed.

(7) Cycling time.

d. Structural.

(1) Bridge (all components).

(a) Static.

(b) Dynamic.

(c) Traffic.

(2) Launcher mechanism.

Dynamic.

e. Mobility. No mobility tests were scheduled. However, performance with and without the bridge was observed during runs to and from test and demonstration sites and during filming while in the mud fields of the MERDC north area.

5. Bridge and Launcher Test Methods. The test methods are described as follows:

a. Bridge. Fabrication of the bridge was completed nearly three months before the launcher. This allowed ample time to complete static and dynamic traffic loadings (Figs. 8 and 9).

Strain gage readings were taken for five different loading conditions. Figures 10 through 14 show the positions of the loads.

Midspan deflections were recorded for one outer and one inner lower chord for each static load position (Fig. 15).

Dynamic and static loadings were recorded with a 5-ton bridge truck (Fig. 16) and an M-113 APC with a gross weight of 22,700 pounds (Fig. 9) used as the load.

Traffic tests were conducted with an APC having a gross weight of 24,300 pounds. Five hundred crossings were made, half from each direction. The speed range for these crossings was approximately 20 to 25 miles per hour. These speeds are well above the speeds that would be expected in the field, but crossing tests were purposely conducted at these speeds to create an extreme condition.

The folding mechanism and cross bracing were strain gaged dynamically. Recordings of several conditions were taken during cycling of the luncher including the launcher at a 13-degree sideslope while under severe resonant shocks created by cycling of the control valves.

After completion of loading tests, launching tests were initiated. At the end of the bridge testing, 1030 launching cycles had been recorded. Static and dynamic hydraulic pressures were monitored throughout the tests.

b. Launcher. The immediate consideration at the completion of fabrication was to determine the ability of the launcher to float with the bridge in the travel position.

The bridge was attached to the launcher and raised to the travel position (Figs. 17, 18, 19, and 20). The launcher with bridge attached was then driven into the water to establish its swimming capability (Fig. 21). Several trials were made with ballast placed at the rear of the vehicle; however, a better attitude was achieved with a combination surfboard-float placed at the front of the vehicle (Fig. 22).

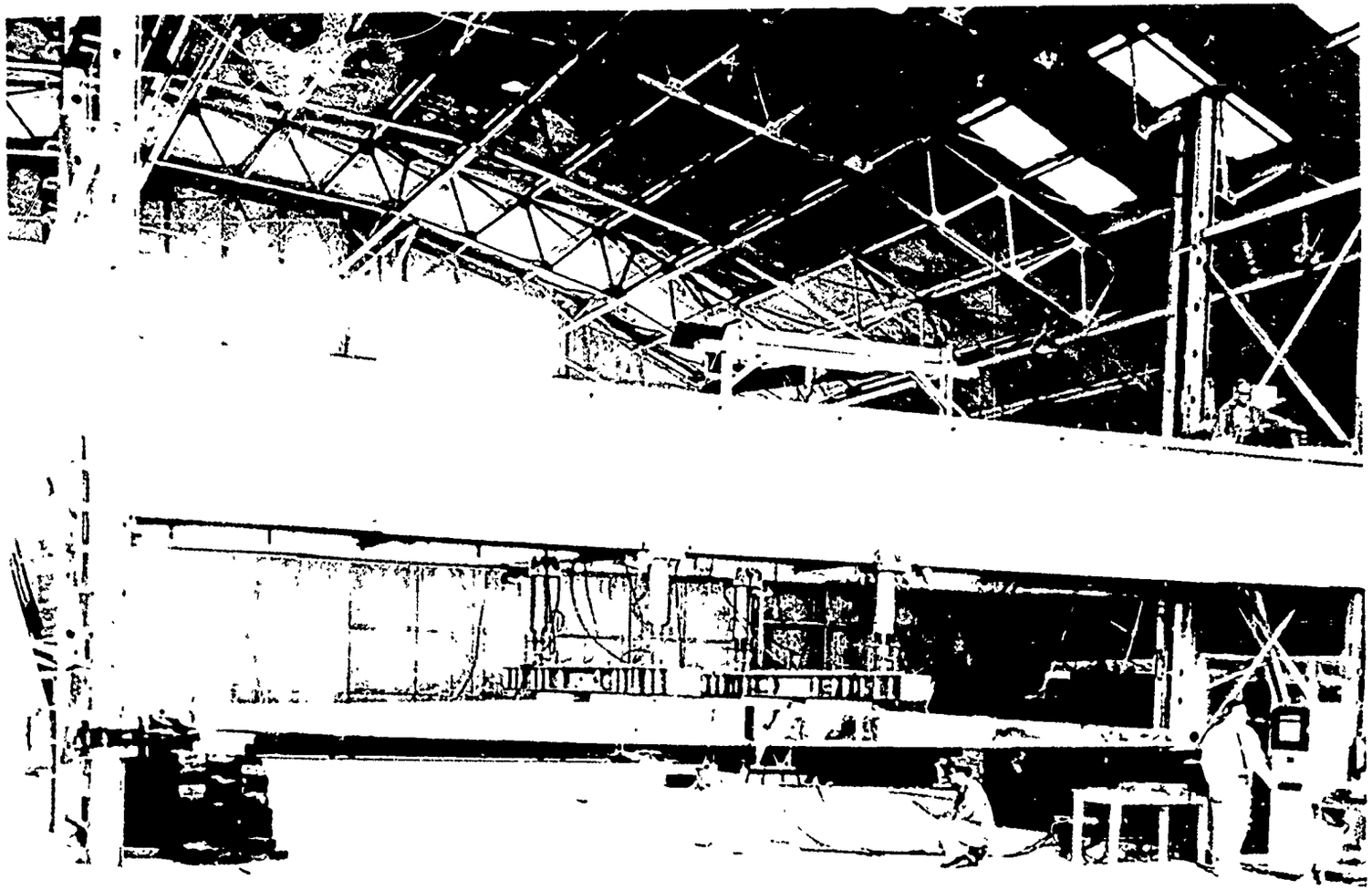

N8580

Fig. 8. Bridge under static loading.

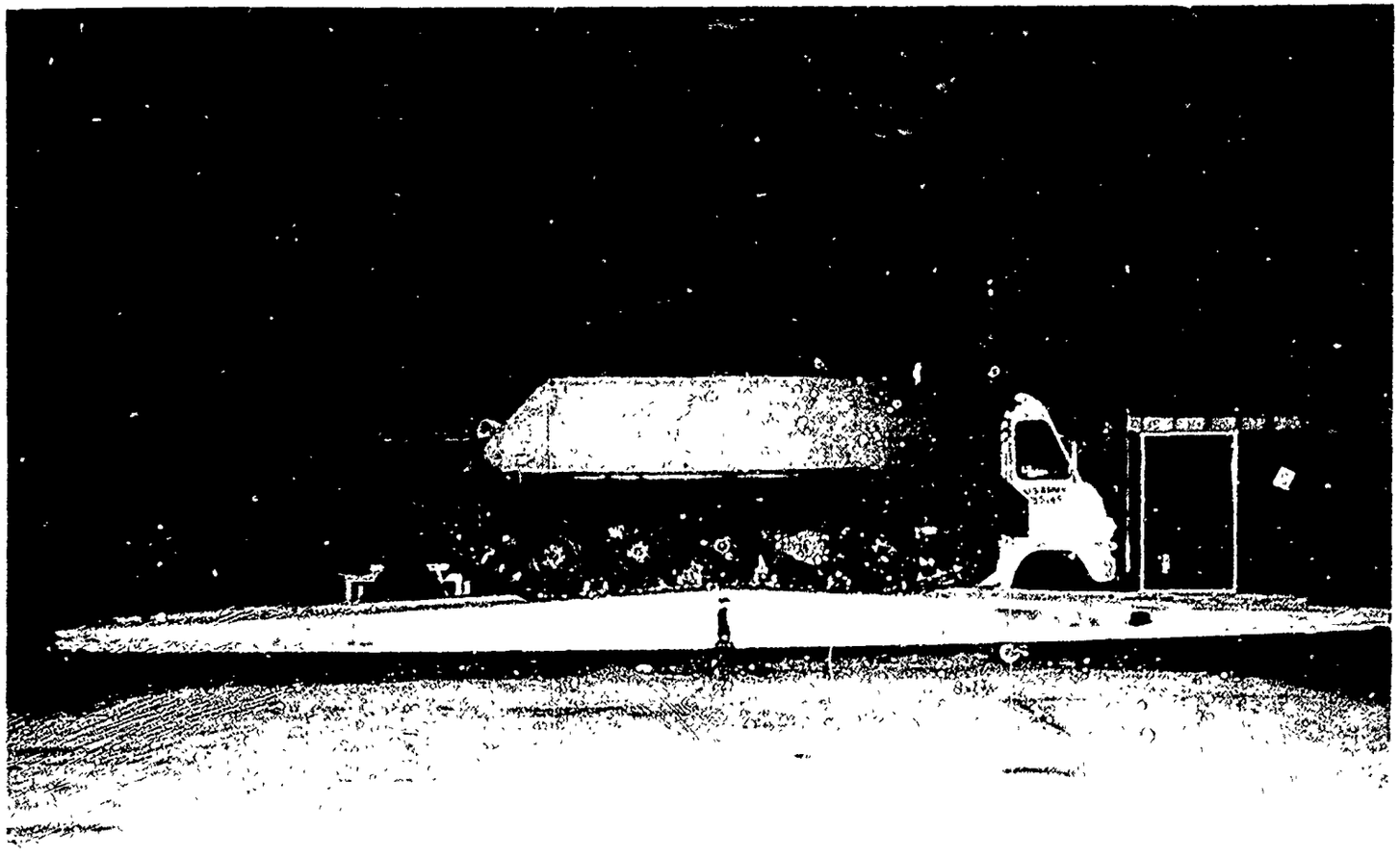

N8911

Fig. 9. Bridge under dynamic loading.

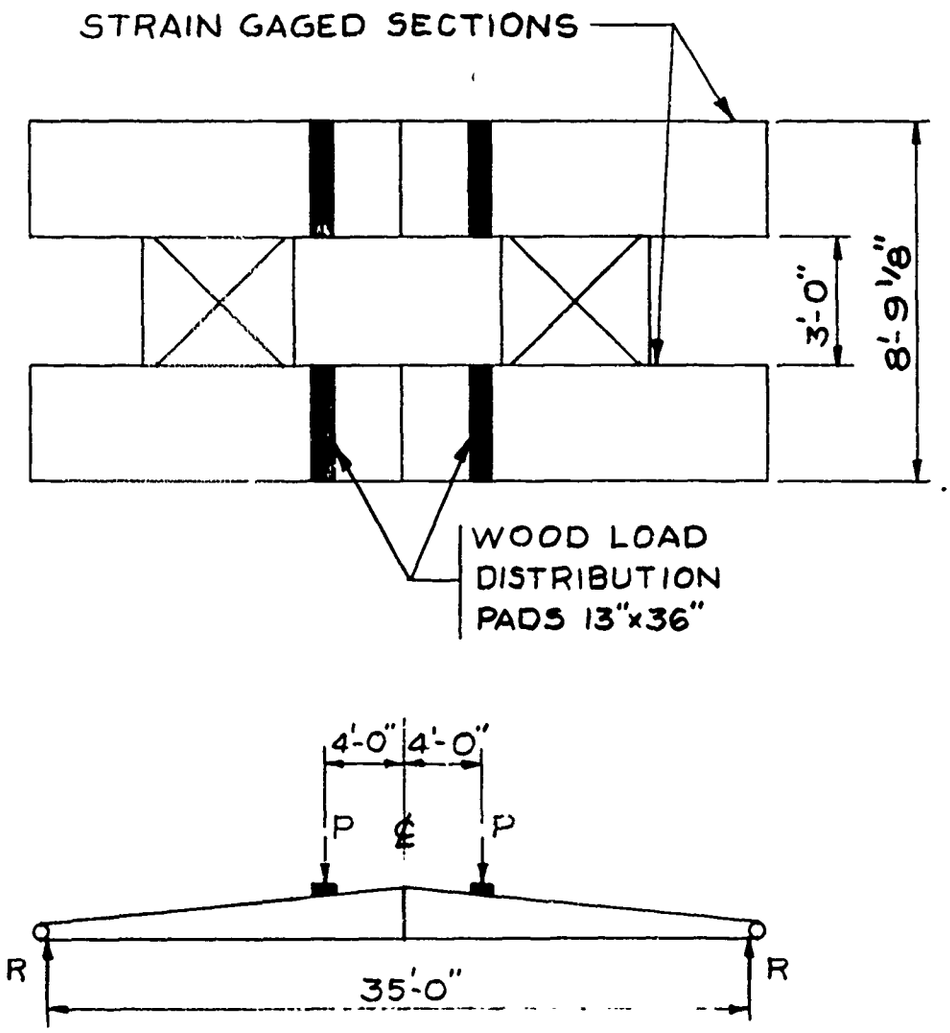

Fig. 10. Load Position 1.

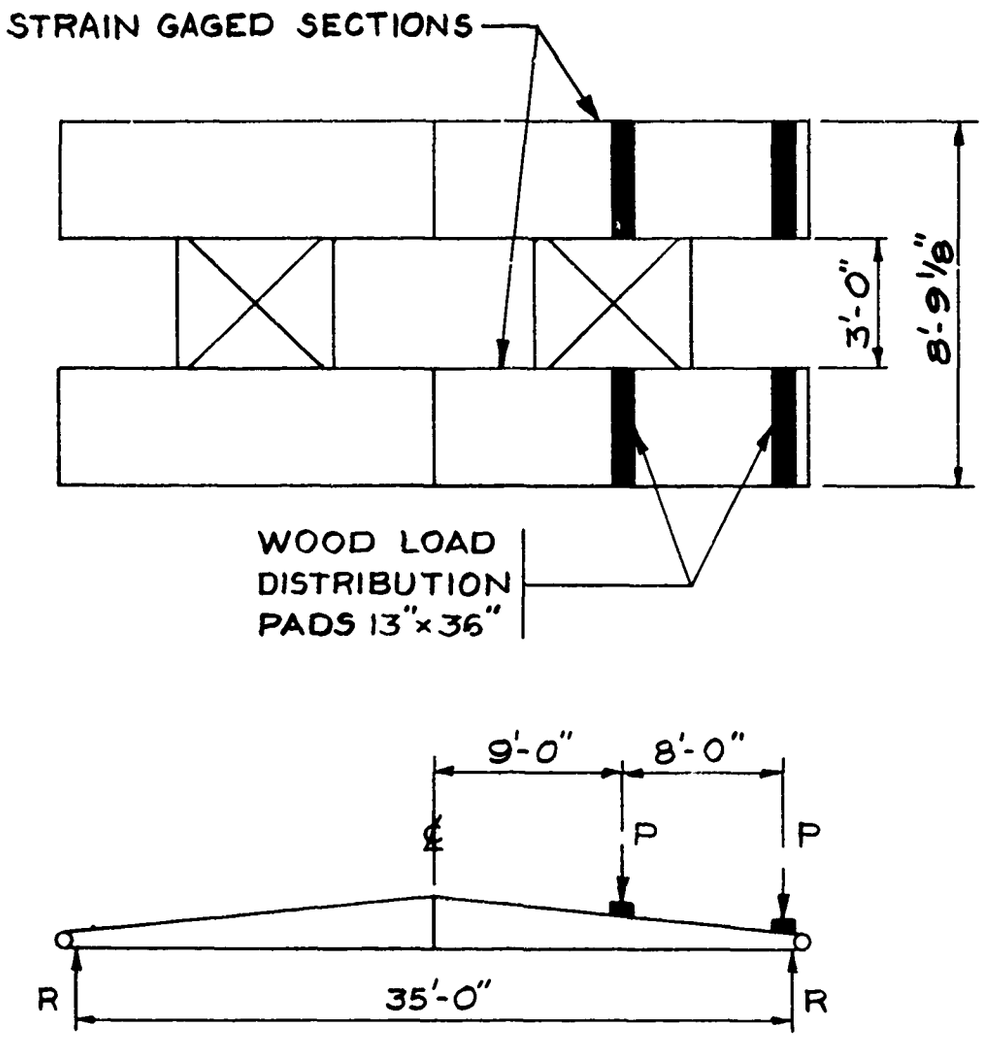

Fig. 11. Load Position 2.

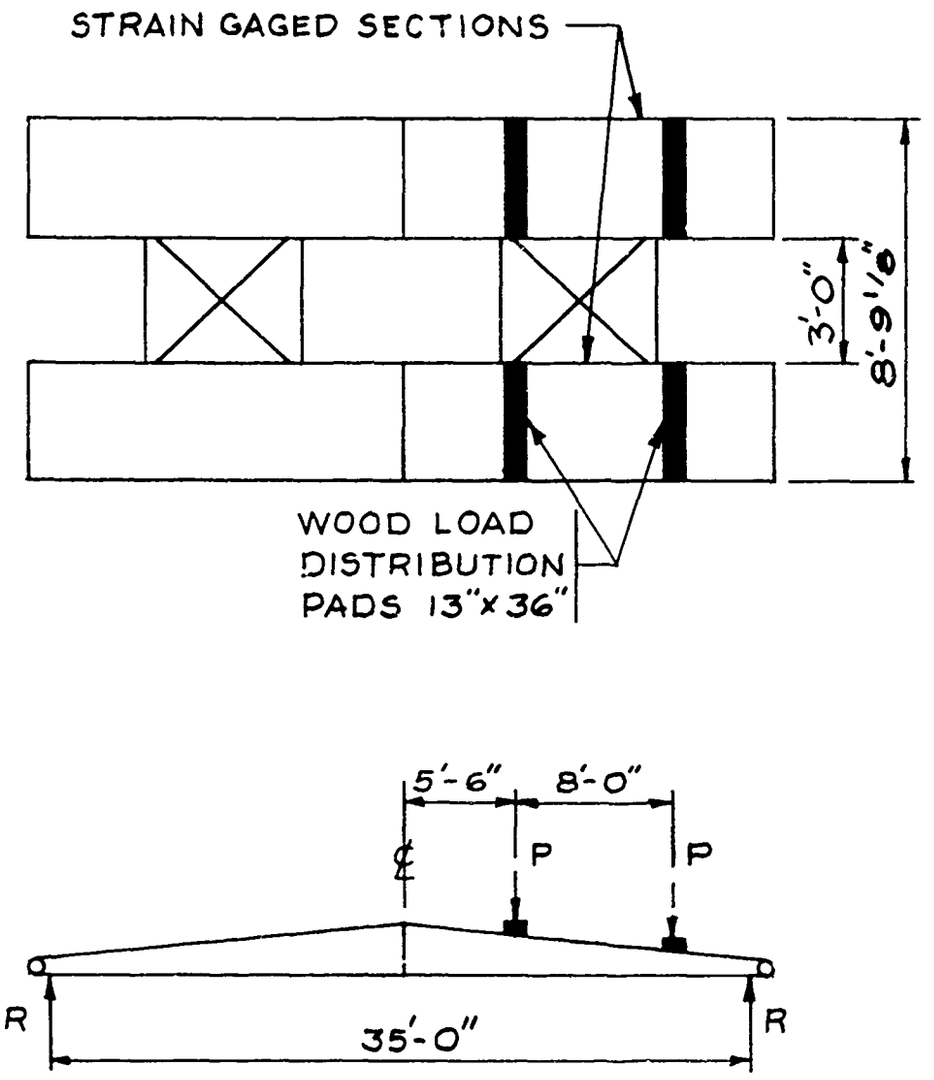

Fig. 12. Load Position 3.

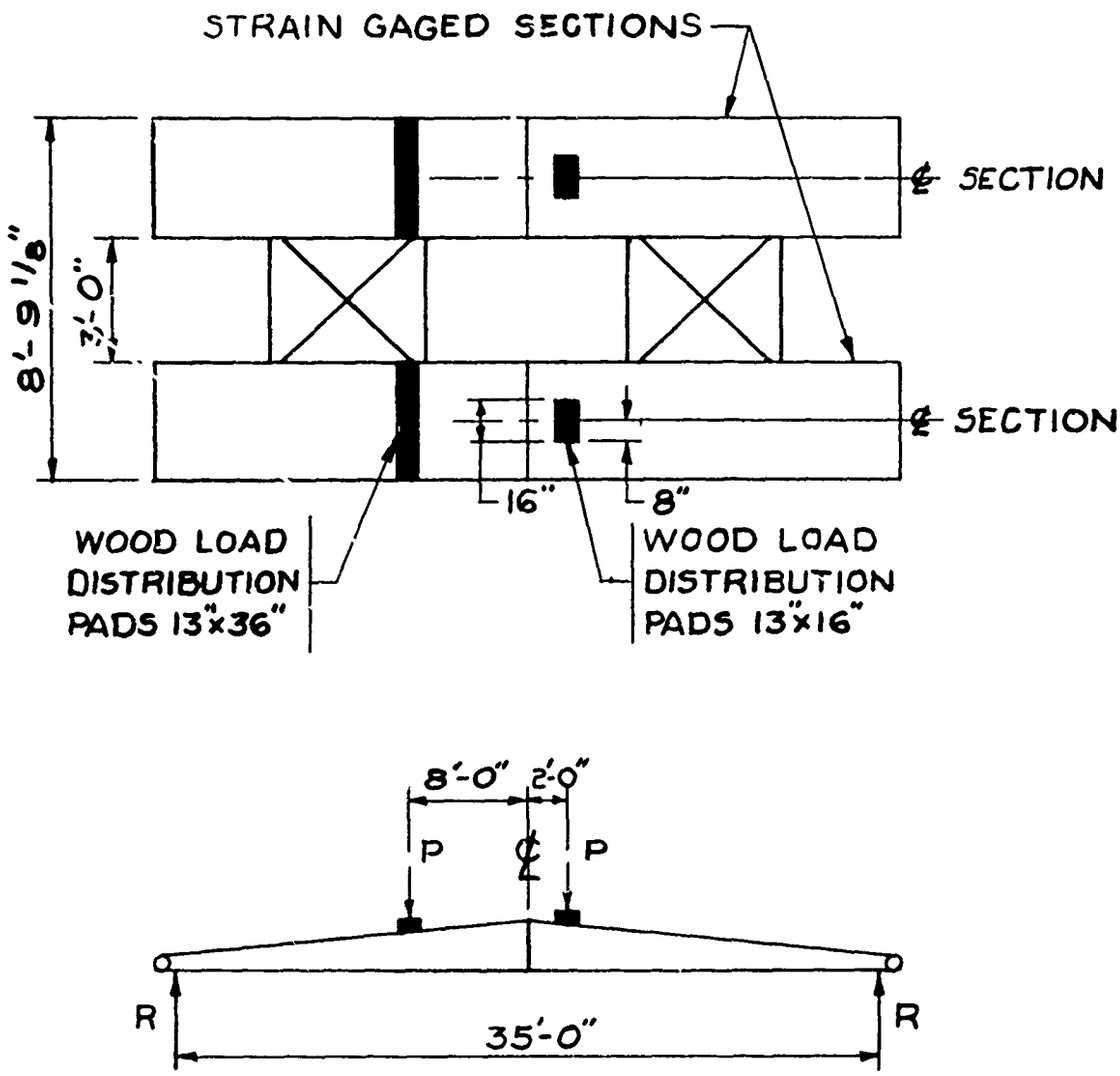

Fig. 13. Load Position 4A.

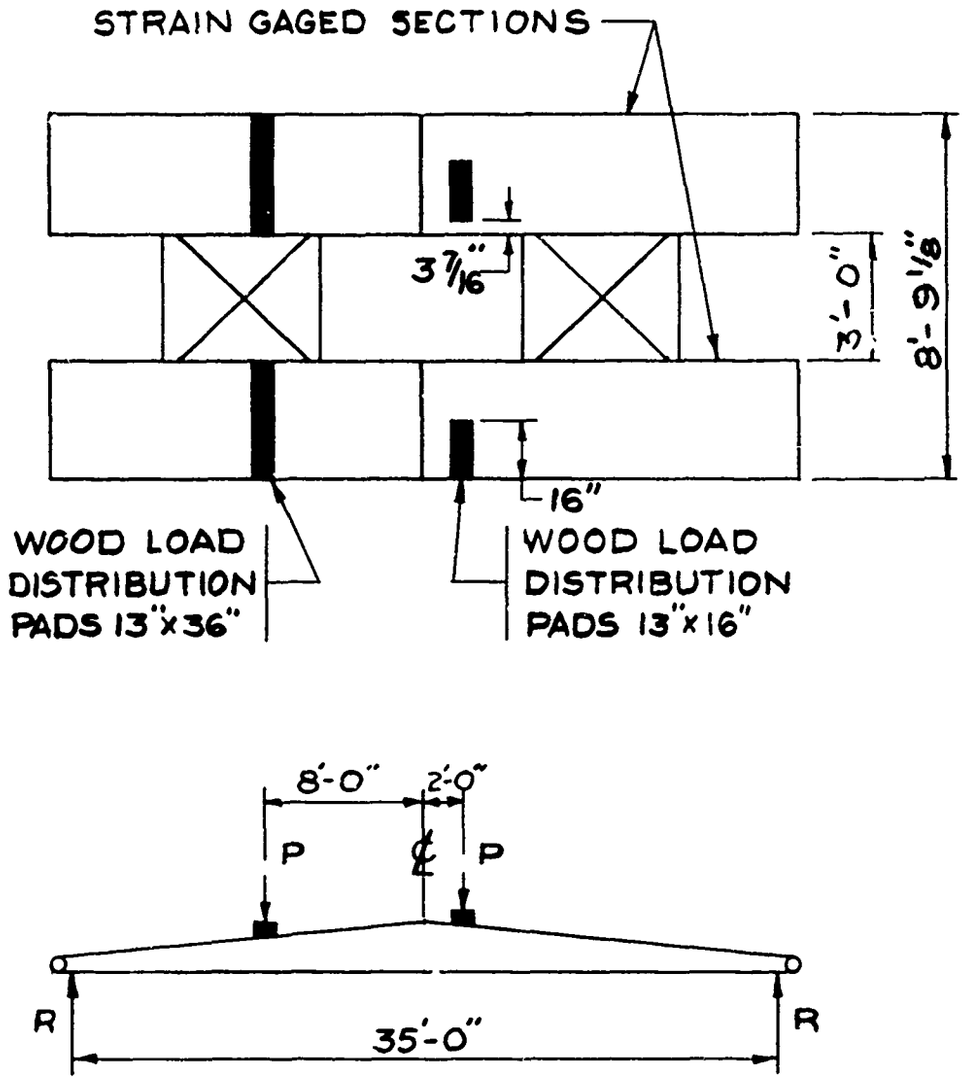

Fig. 14. Load Position 4B.

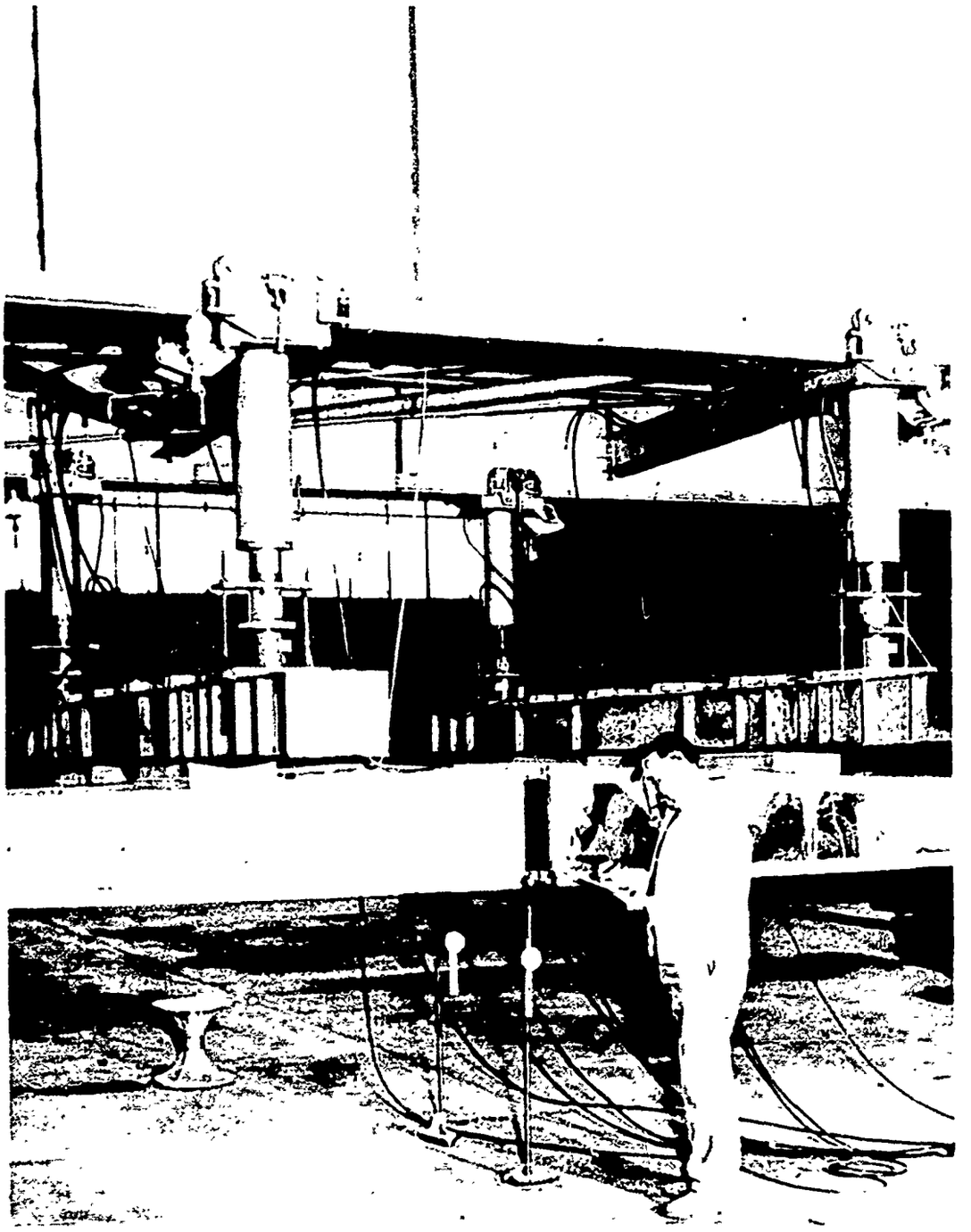

N8448

Fig. 15. Recording deflection at centerline of bridge for load position 1.

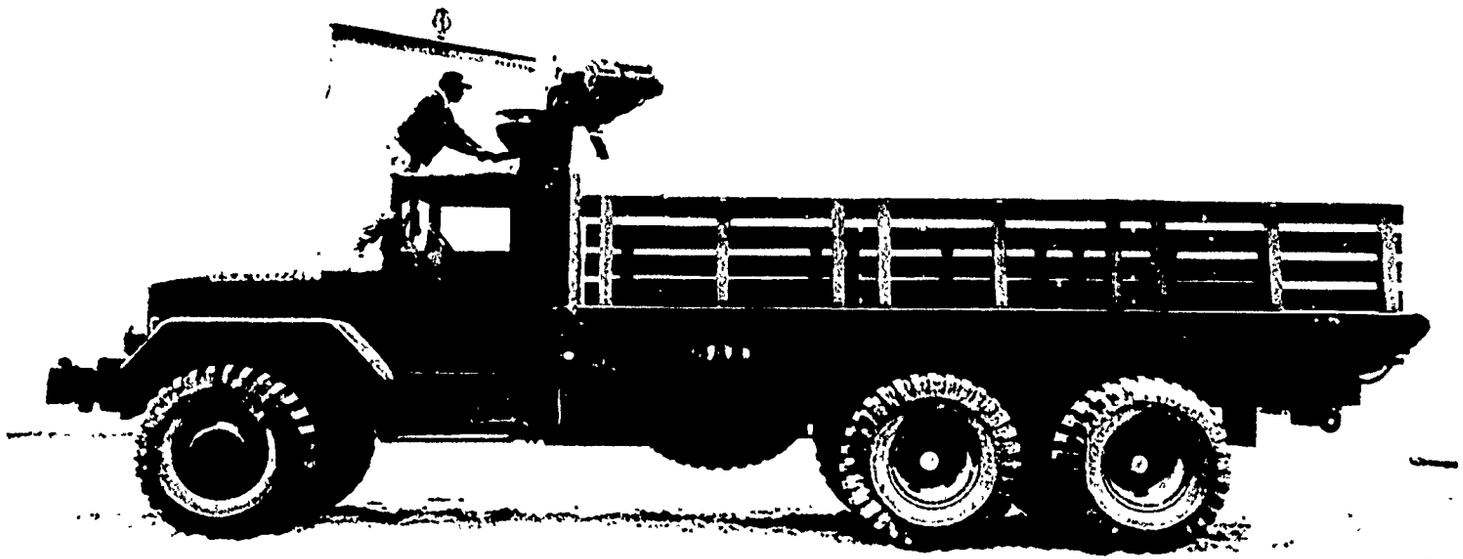

C3197

Fig. 16. Five-ton bridge truck, class 22.

N10767

Fig. 17. Launcher attached to bridge.

N10765

Fig. 18. Launcher retrieving bridge.

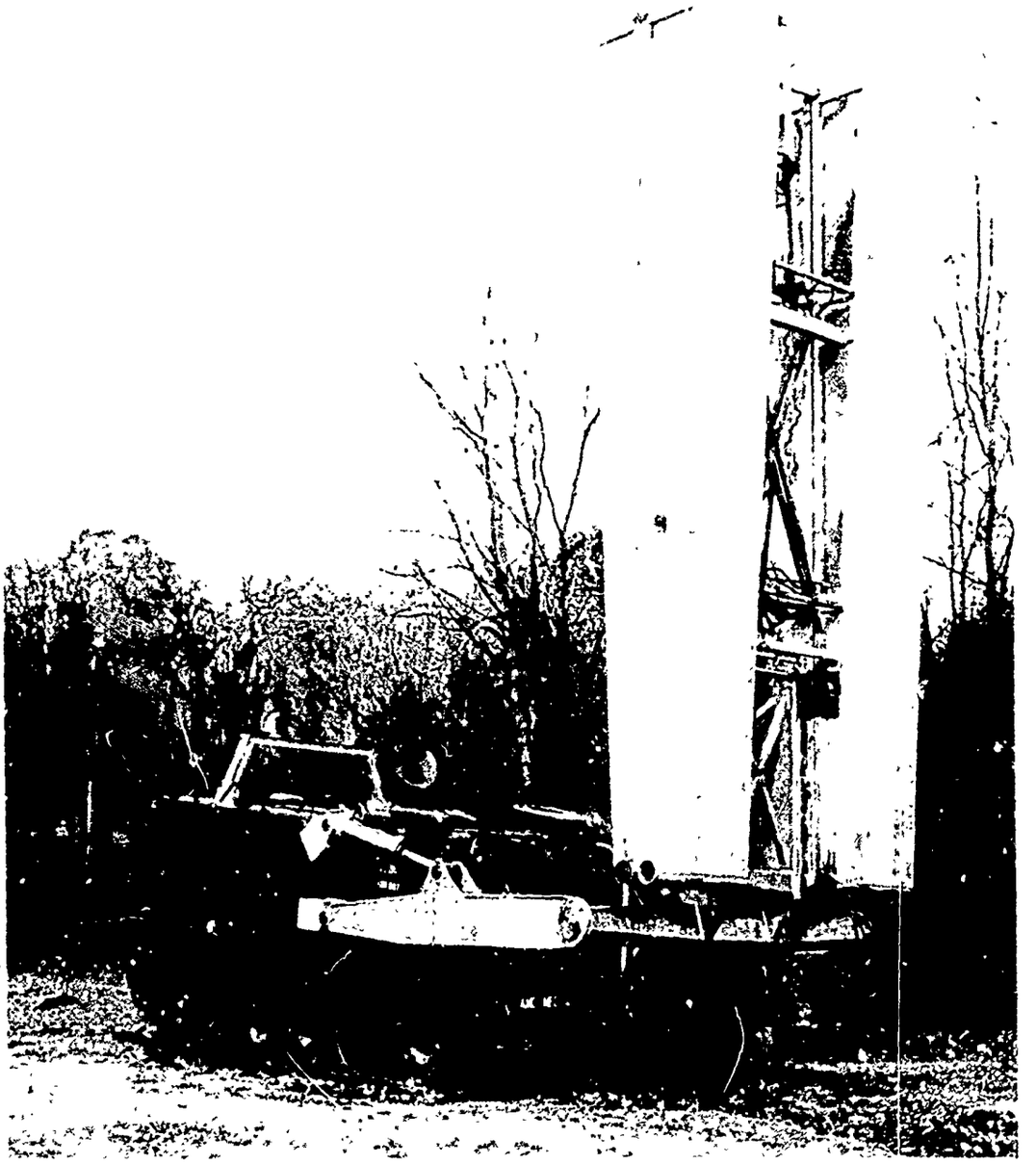

N10766

Fig. 19. Launcher with bridge at vertical while retrieving.

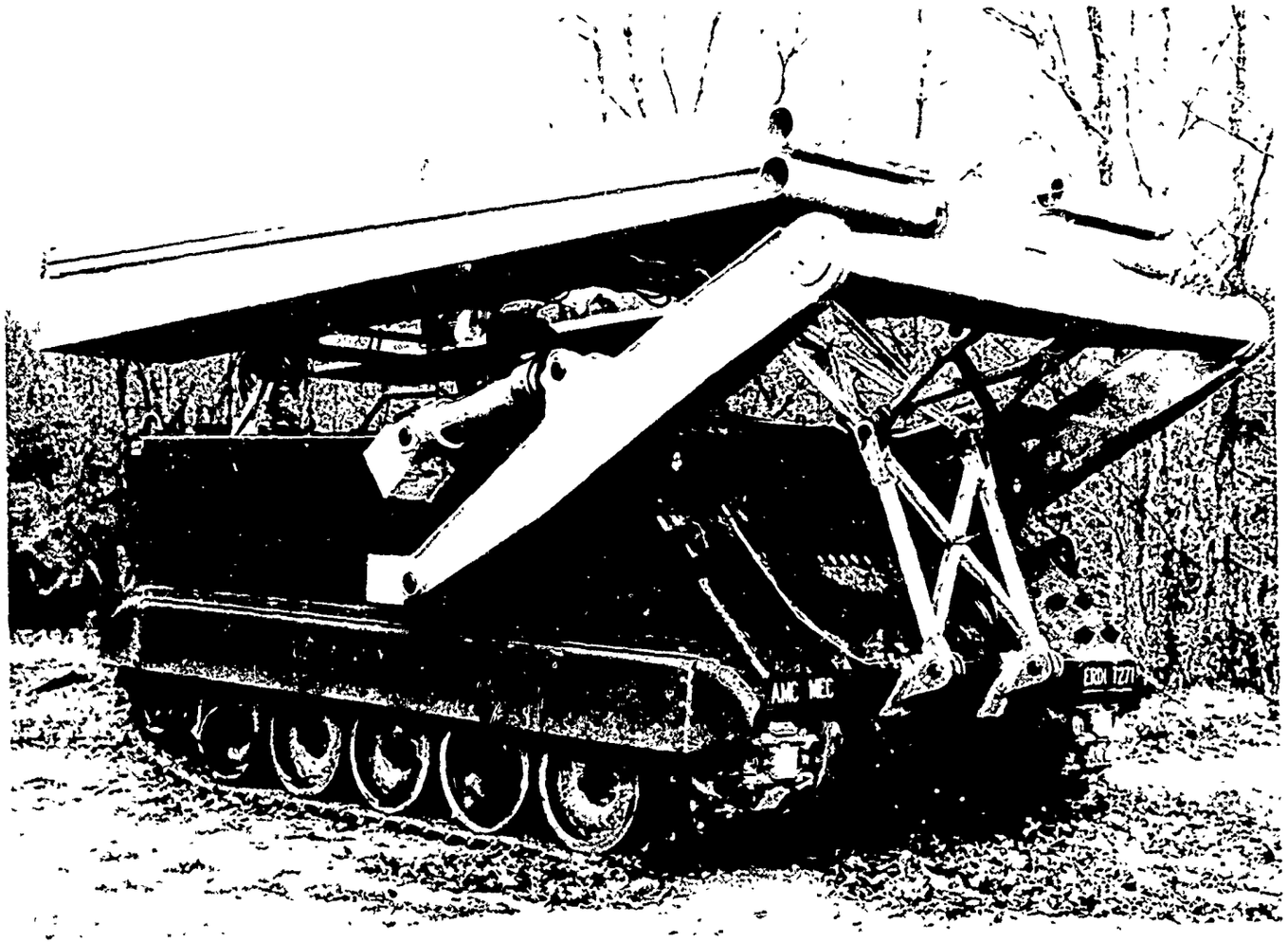

N10768

Fig. 20. Launcher with bridge in carrying position.

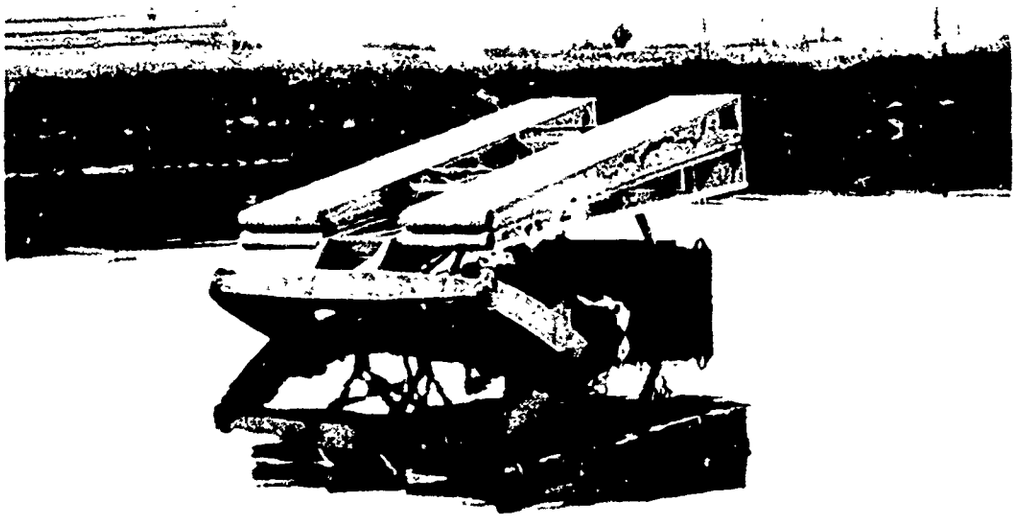

N10771

Fig. 21. Static floating attitude without ballast or surfboard-float.

The physical characteristics, including the overall dimensions, bridge and launcher weights, and the center of gravity of the launcher with and without the bridge, were then recorded.

Strain gage readings for the launching mechanism were taken for dynamic operation only. Recordings were made for the following conditions:

(1) Nonshock run: the launcher sitting level, operating at idle speed, 500 revolutions per minute (rpm), with no shock loading.

(2) Normal run: the launcher sitting level while launching the bridge at an engine speed of 1800 rpm, 5 gallons per minute

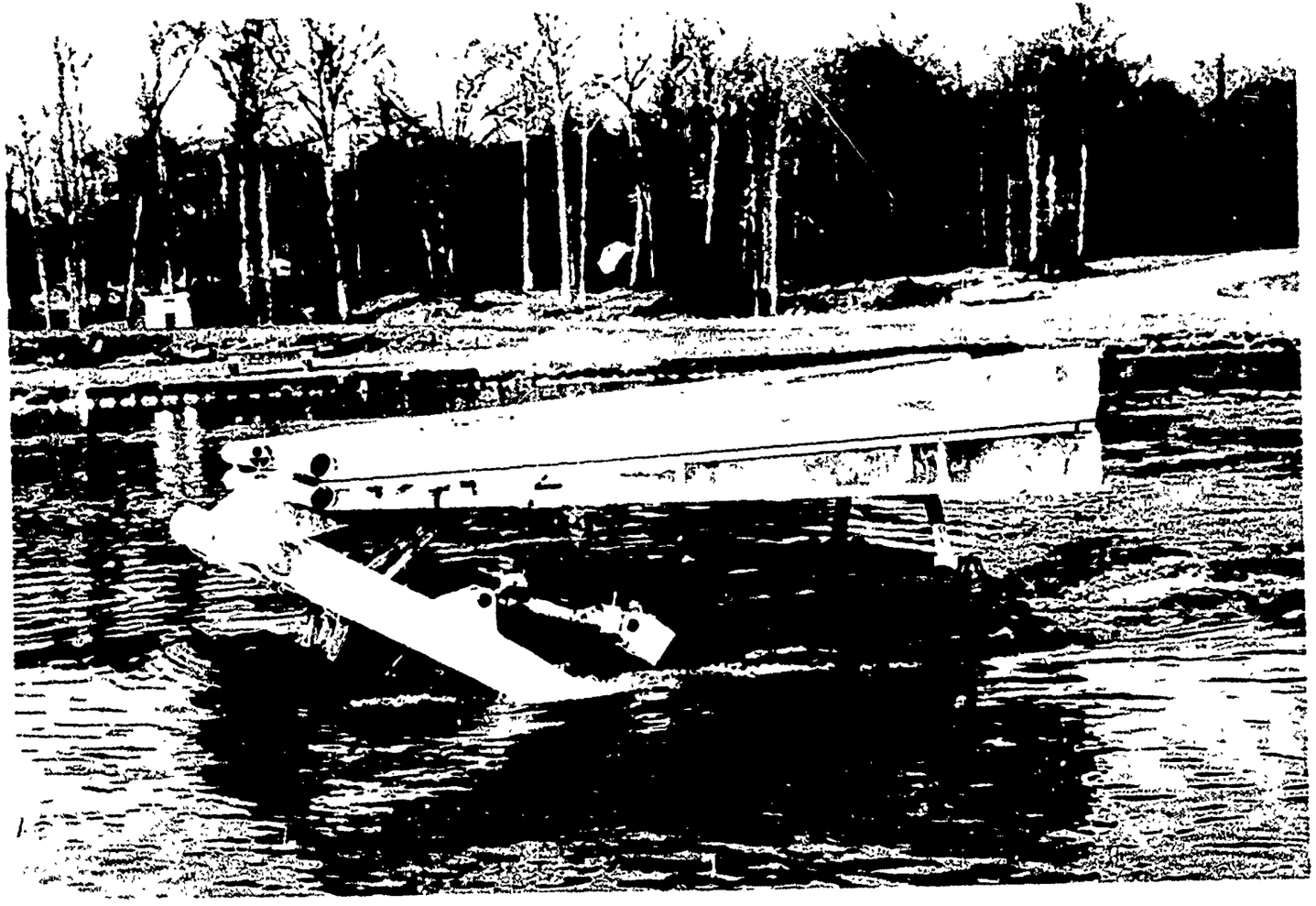

N1118

Fig. 22. Unit at full speed using combination surfboard-float.

(gpm) pump flow, and retrieving the bridge at an engine speed of 1000 rpm, 3 gpm pump flow, with normal shock loading.

(3) Shock run: the launcher sitting level, operating at overspeed, 2000 rpm, with severe resonant shocks.

(4) Nonshock run: the launcher sitting on a 12-degree sideslope.

(5) Normal run: the launcher sitting on a 12-degree sideslope.

(6) Shock run: the launcher sitting on a 12-degree sideslope.

There were more strain gages than recording channels, so the entire cycle of runs was repeated to pick up the remaining gages. The sideslope for the last three runs was increased to 13.5 degrees.

Hydraulic pressures were recorded throughout these tests and were also recorded for the launcher sitting on upslopes to 18.5 degrees and downslopes to 16 degrees. (With the vehicle sitting level, launching an upslope terrain is unlimited; however, the downslope launch is limited to 6 degrees from the horizontal.) Pressures were monitored throughout the remainder of the test.

Water operation included 26 hours of swimming and 125 entrances to and exits from the water. Entry and egress conditions varied from a gently sloped concrete ramp to a sharp drop off (Fig. 23).

Land mobility was limited to travel within Fort Belvoir and the Mobility Equipment Research and Development Center (MERDC) North Area. Conditions varied from paved roads to 18-inch-deep mud field and slopes up to 50 percent (Fig. 24). A total of 141 miles had been logged at the conclusion of vehicle testing.

The last phase of testing was the cycling of the mechanism. Nearly all operation was on level ground under normal operating conditions. Six different operators were used during the cycling to ensure operational ease by all users. Operation and testing were discontinued after 1030 launching cycles.

P1830

Fig. 7. Exit from water up sharp incline.

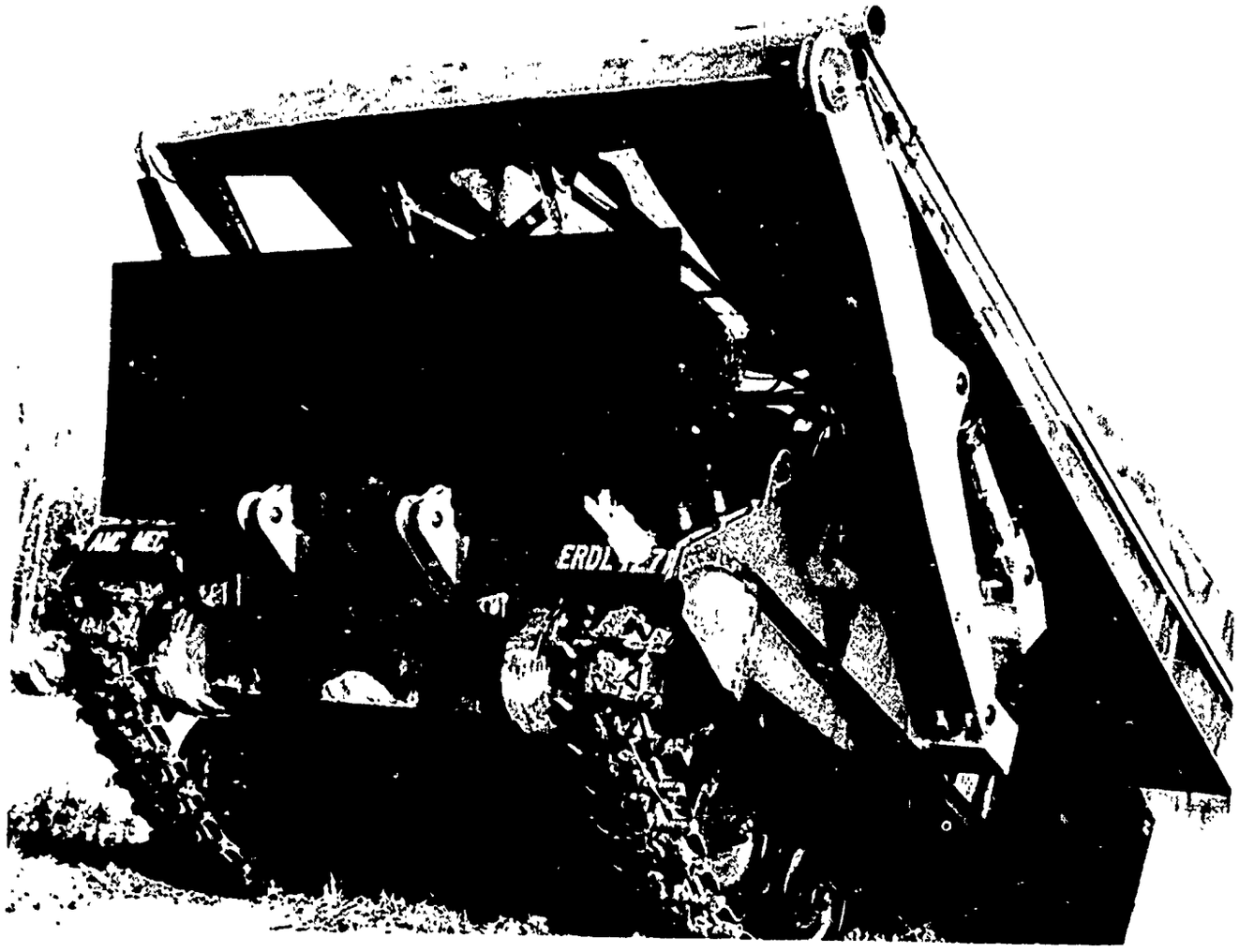

N11084

Fig. 24. Launcher with bridge negotiating a 50-percent grade.

6. Test Results. The test results are as follows:

a. Bridge. The results of static testing were generally within 10 percent of the predicted stresses (Tables I, II, III, IV, and V).

On the initial loading at load position 1 (Fig. 10), the transverse welds in the bottom chord of each tread section failed while the load was increased from P equals 22,000 pounds to P equals 24,500 pounds. The failure was through the weld metal which showed necking before failure. Examination of the fracture showed high porosity throughout the weld. It should be noted that these welds are not in the design but were an expedient so that the experimental model could be built with available plate material. These box sections on a production unit will be one-piece extrusions and, therefore, not subject to transverse welds (Fig. 2). It should also be noted that the 6061-T6 extruded aluminum deck was also an expedient: an available section which will be replaced in production by a 2-inch-thick extrusion of similar shape in 7005-T53 aluminum. This alloy change gives an increase in yield strength to a minimum of 44 ksi and a reduction in cross-sectional area of approximately 5 percent. It also lowers the neutral axis of the tread section, thus lowering the maximum achieved stress at a given load. The welded yield strength is approximately 100 percent higher than welded 6061-T6.

Repair was made to the fractured welds, and several other areas were ground out and rewelded after examination revealed lack of penetration or lack of fusion.

The remainder of the static loading was completed without failure or any evidence of distress. Midspan deflections were measured for the five static loadings and followed closely the predicted values (Table VI).

Dynamic testing was necessarily conducted in two parts. Dynamic stresses were measured for tracked and wheeled vehicles and also for the launching cycle. The tracked vehicle was an M-113 APC with a gross weight of 22,700 pounds and was driven across the bridge at approximately 25 miles per hour (Fig. 9). This was the maximum, negotiable speed attainable by an experienced operator. Recorded stresses were approximately the expected values with shocks generally running near the predicted 25 percent (Table VII). Runs 1 and 2 are representative of several crossings, and run 3 is the stress for the vehicle static at the center of the bridge.

Table I. Stresses for Load Position 1

Channel No.	Station No.**	Gage Position	Stress at Load P in Pounds (ksi) 7,000	12,000	17,000	22,000	24,500	27,000
1	1	*Horizontal - Outside Web	-0.10	+0.10	+0.10	+0.20	+0.30	+0.60
2	1	*Diagonal " "	+0.95	+1.85	+2.75	+3.75	+4.35	+5.05
3	1	*Vertical " "	-0.30	+0.20	+0.20	+0.20	+0.30	+0.40
4	1	*Horizontal - Inside Web	-0.10	+0.10	+0.10	+0.10	+0.50	+0.50
5	1	*Diagonal " "	+1.25	+2.45	+3.35	+4.35	+4.95	+5.75
6	1	*Vertical " "	-0.05	+0.25	+0.25	+0.45	+0.45	+0.65
7	3	*Horizontal - Outside Web	0	+0.20	+0.10	+0.20	+0.30	+0.60
8	3	*Diagonal " "	+0.60	+1.40	+2.00	+2.80	+3.20	+3.90
9	3	*Vertical " "	-0.05	-0.15	-0.25	+0.35	+0.45	+0.45
10	4.5	*Parallel - Bottom of Top Flange	-0.85	-1.25	-1.65	-1.95	+2.25	-2.15
11	4.5	*Perpendicular " " " "	+0.20	0	0	+0.20	+0.20	+0.60
12	4.5	*Diagonal " " " "	-0.20	+0.30	+0.10	-0.40	+0.10	+0.30
13	4.5	*Perpendicular - Top of Top Flange	+0.20	+0.50	+0.80	+1.10	+1.30	+1.80
14	4.5	*Parallel " " " "	-1.70	-3.00	-4.30	-5.40	-5.90	-6.60
15	4.5	*Diagonal " " " "	-1.00	-1.40	-1.90	-2.30	-2.50	-2.60
16	4.5	Outside Top Flange	-1.55	-2.95	-4.25	-5.45	-5.95	-6.45
17	4.5	Inside Top Flange	-2.00	-3.50	-4.80	-5.90	-6.70	-6.80
18	4.5	Outside Bottom Flange	+2.35	+4.35	+5.95	+7.85	+8.75	+9.95
19	6	Bottom Flange of Diaphragm	+0.10	+0.20	+0.10	+0.20	+0.20	+0.60
20	3	*Horizontal - Inside Web	0	+0.30	+0.40	+0.60	+0.70	+1.10
21	3	*Diagonal " "	+0.80	+1.80	+2.50	+3.40	+3.80	+4.40
22	3	*Vertical " "	-0.10	-0.10	-0.10	-0.10	+0.30	+0.30
23	6	*Perp. - Center of Web of Diaphragm	-0.20	0	-0.20	0	0	+0.20
24	6	*Diagonal " " " " "	-0.25	+0.05	-0.25	-0.75	-0.05	+0.15
25	6	*Parallel " " " " "	-0.35	-0.65	-0.65	-0.25	-0.55	-0.15

Table I (cont'd)

Channel No.	Station No.**	Gage Position	Stress at Load P in Pounds (ksi) 7,000	12,000	17,000	22,000	24,500	27,000
26	16	Inside of Top Flange	-2.30	-4.00	-5.90	-7.80	-8.80	-9.50
27	16	Inside of Bottom Flange	+4.80	+8.50	+11.90	+15.80	+17.90	+20.50
28	16	Outside of Top Flange	-2.75	-4.65	-6.85	-8.75	+9.85	-10.65
29	16	Outside of Bottom Flange	+4.95	+8.05	+11.05	+14.65	+16.15	+18.45
30	16	*Parallel - Top Flange	-2.20	-3.80	-5.60	-7.50	-8.50	-9.20
31	16	*Diagonal " "	-0.80	-1.40	-2.20	-2.90	-3.40	-3.40
32	16	*Perpendicular " "	+0.45	+0.85	+1.25	+1.75	+1.85	+2.45
33	16	*Parallel - Bottom of Top Flange	-1.85	-2.85	-3.85	-4.95	-5.45	-5.75
34	16	*Diagonal " " " "	-0.95	-1.35	-1.85	-2.15	-2.35	-2.05
35	16	*Perpendicular " " " "	+0.25	+0.65	+1.05	+1.45	+1.75	+2.25
36	18	Tensile Link Beam - Horizontal	+0.05	-0.25	-0.25	-0.25	+0.45	+0.15
37	4.5	Inside of Bottom Flange	+2.50	+4.50	+6.20	+8.25	+9.20	+10.40
38	13	Top of Cross Bracing	-0.60	+1.50	-3.30	-4.20	-4.80	-5.10
39	13	Bottom of Cross Bracing	-4.20	-6.00	-7.50	-8.10	-7.10	-9.00
40	6	Top of Cross Bracing	-1.50	-2.10	-3.00	-3.60	-2.70	-2.10
41	6	Bottom of Cross Bracing	-2.85	-4.05	-5.55	-5.55	-5.25	-5.25
42								
43	8	Solid Tube	+8.10	+14.70	+18.00	+17.40	+18.60	+21.30
44	8	Welded Tube	+6.90	+12.30	+16.20	+19.80	+21.90	+25.20
45	18	Hinge Link - Interior	+11.25	+18.75	+25.95	+33.75	+37.95	+42.45
46	18	Hinge Link - Exterior	+9.90	+17.40	+23.70	+30.30	+35.10	+33.10
47	18	Hinge Link - Interior	+12.15	+19.95	+26.55	+33.30	+36.75	+41.25
48	18	Hinge Link - Exterior	+10.35	+17.25	+23.85	+31.05	+34.95	+39.45

*Rosette.

**Indicates distance in feet from centerline of end tube.

Table II. Stresses for Load Position 2

Channel No.	Station No.**	Gage Position	Stress at Load P in Pounds (ksi) 7,000	12,000	17,000	22,000	24,500	27,000
1	1	*Horizontal - Outside Web	0	+0.30	+0.30	+0.60	+0.60	+0.80
2	1	*Diagonal " "	+1.45	+2.85	+3.95	+5.15	+5.85	+6.25
3	1	*Vertical " "	+0.20	+0.20	+0.20	+0.40	+0.40	+0.40
4	1	*Horizontal - Inside Web	-0.15	+0.05	+0.05	+0.15	+0.15	+0.45
5	1	*Diagonal " "	+1.20	+2.50	+3.70	+5.10	+5.60	+6.00
6	1	*Vertical " "	-0.05	+0.15	+0.15	+0.15	+0.15	+0.15
7	3	*Horizontal - Outside Web	+0.10	+0.30	+0.30	+0.50	+0.50	+0.60
8	3	*Diagonal " "	+0.60	+1.40	+1.90	+2.60	+2.90	+3.20
9	3	*Vertical " "	0	0	+0.40	+0 20	+0.40	+0.30
10	4.5	*Parallel - Bottom of Top Flange	-0.70	-1.10	-1.50	-1.90	-2.10	-2.10
11	4.5	*Perpendicular " " " "	+0.10	+0.20	+0.20	+0.50	+0.50	+0.50
12	4.5	*Diagonal " " " "	-0.15	+0.05	-0.55	-0.15	-0.15	-0.85
13	4.5	*Perpendicular - Top of Top Flange	+0.10	+0.50	+0.60	+0.90	+1.00	+1.00
14	4.5	*Parallel " " " "	-1.45	-2.95	-3.35	-4.45	-4.95	-5.35
15	4.5	*Diagonal " " " "	-1.00	-1.40	-1.90	-2.50	-2.80	-3.00
16	4.5	Outside Top Flange	-1.80	-2.50	-3.30	-4.40	-4.90	-5.40
17	4.5	Inside Top Flange	-1.75	-3.05	-3.75	-4.85	-6.15	-6.05
18	4.5	Outside Bottom Flange	+2.00	+3.90	+5.40	+7.00	+7.80	+8.50
19	6	Bottom Flange of Diaphragm	-0.50	-0.20	0	0	-0.10	-0.10
20	3	*Horizontal - Inside Web	+0.05	+0.25	+0.25	+0.45	+0.45	+0.45
21	3	*Diagonal " "	+0.45	+1.35	+1.75	+2.25	+2.55	+2.85
22	3	*Vertical " "	-0.10	+0.10	+0.10	+0.10	+0.30	+0.30
23	6	*Perp. - Center of Web of Diaphragm	-0.10	+0.10	+0.10	+0.20	+0.10	+0.10
24	6	*Diagonal " " " " "	0	+0.10	+0.20	+0.30	+0.20	+0.40
25	6	*Parallel " " " " "	-0.30	+0.30	+0.30	-0.10	-0.10	+0.30

Table II (cont'd)

Channel No.	Station No.**	Gage Position	Stress at Load P in Pounds (ksi) 7,000	12,000	17,000	22,000	24,500	27,000
26	16	Inside of Top Flange	-1.05	-1.65	-1.75	-2.45	-3.45	-3.35
27	16	Inside of Bottom Flange	+1.70	+3.30	+4.60	+6.00	+6.60	+7.20
28	16	Outside of Top Flange	-0.75	-1.45	-2.15	-2.75	-3.15	-3.45
29	16	Outside of Bottom Flange	+1.55	+3.15	+4.45	+5.85	+6.45	+6.85
30	16	*Parallel - Top Flange	-1.05	-1.25	-1.75	-2.35	-2.95	-3.05
31	16	*Diagonal " "	-0.25	-0.05	-0.35	-0.45	-0.75	-0.65
32	16	*Perpendicular " "	+0.20	+0.80	+1.00	+1.30	+1.30	+1.50
33	16	*Parallel - Bottom of Top Flange	-0.90	-0.60	-1.40	-2.10	-2.40	-2.50
34	16	*Diagonal " " " "	-0.65	-0.65	-0.85	-1.05	-1.15	-1.25
35	16	*Perpendicular " " " "	-0.15	+0.15	+0.15	+0.25	+0.15	+0.25
36	18	Tensile Link Beam - Horizontal	-0.10	+0.10	-0.10	+0.60	-0.10	+0.10
37	4.5	Inside of Bottom Flange	+1.80	+3.90	+5.50	+7.00	+7.90	+8.50
38	13	Top of Cross Bracing	0	-0.60	+0.60	0	0	0
39	13	Bottom of Cross Bracing	-3.00	-5.10	-6.00	-7.50	-8.10	-6.00
40	6	Top of Cross Bracing	-1.65	-2.85	-3.75	-5.25	-5.85	-5.85
41	6	Bottom of Cross Bracing	-1.65	-4.35	-5.55	-5.85	-6.15	-7.05
42								
43	8	Solid Tube	+5.25	+10.35	+14.85	+17.85	+17.55	+17.55
44	8	Welded Tube	+5.25	+10.35	+13.05	+16.65	+17.25	+19.65
45	18	Hinge Link - Interior	+3.60	+7.20	+9.90	+12.90	+13.80	+15.30
46	18	Hinge Link - Exterior	+2.70	+6.30	+8.70	+11.40	+12.00	++13.50
47	18	Hinge Link - Interior	+4.65	+8.25	+10.65	+13.35	+13.95	+16.05
48	18	Hinge Link - Exterior	+2.85	+6.45	+10.05	+11.25	+12.45	+13.35

*Rosette

**Indicates distance in feet from centerline of end tube.

Table III. Stresses for Load Position 3

Channel No.	Station No.**	Gage Position	Stress at Load P in Pounds (ksi) 7,000	12,000	17,000	22,000	24,500	27,000
1	1	*Horizontal - Outside Web	+0.45	+0.65	+0.75	+0.85	+0.85	+1.05
2	1	*Diagonal " "	+2.10	+3.60	+4.30	+6.90	+7.70	+8.30
3	1	*Vertical " "	-0.40	+0.30	+0.30	+0.30	+0.30	+0.30
4	1	*Horizontal - Inside Web	-0.10	-0.10	0	+0.20	+0.10	+0.20
5	1	*Diagonal " "	+2.50	+4.30	+5.90	+7.50	+7.50	+8.90
6	1	*Vertical " "	-0.40	-0.40	+0.70	+0.70	+0.70	-0.40
7	3	*Horizontal - Outside Web	+0.10	+0.10	+0.10	+0.40	+0.40	+0.40
8	3	*Diagonal " "	+1.20	+1.40	+3.40	+4.70	+4.40	+5.80
9	3	*Vertical " "	+0.10	+0.40	+0.40	-0.30	+0.50	+0.50
10	4.5	*Parallel - Bottom of Top Flange	-0.05	-0.05	-0.25	-0.25	-0.45	-0.55
11	4.5	*Perpendicular " " " "	+1.15	+2.05	+2.95	+4.15	+4.75	+5.15
12	4.5	*Diagonal " " " "	+1.10	+1.60	+2.00	+2.00	+2.60	+3.00
13	4.5	*Perpendicular - Top of Top Flange	-0.05	-0.15	-0.35	-0.85	-0.15	-1.35
14	4.5	*Parallel " " " "	-2.90	-4.90	-6.30	-9.40	-10.40	-10.30
15	4.5	*Diagonal " " " "	-2.10	-3.40	-4.50	-6.00	-6.00	-7.50
16	4.5	Outside Top Flange	-3.55	-5.35	-7.35	-9.05	-10.15	-11.35
17	4.5	Inside Top Flange	-3.75	-5.95	-7.35	-9.75	-11.15	-12.65
18	4.5	Outside Bottom Flange	+3.90	-6.60	+9.30	+12.20	+13.70	+15.30
19	6	Bottom Flange of Diaphragm	+0.30	-0.40	-0.40	+0.60	+0.60	-0.40
20	3	*Horizontal - Inside Web	+0.20	+0.40	+0.70	0	0	+1.10
21	3	*Diagonal " "	+0.50	+2.70	+4.00	+5.20	+5.70	+6.00
22	3	*Vertical " "	-0.15	+0.15	+0.15	+0.15	-0.05	+0.05
23	6	*Perp. - Center of Web of Diaphragm	-0.20	0	-0.20	0	-0.20	-0.20
24	6	*Diagonal " " " "	-0.15	-0.05	-0.05	+0.15	+0.05	+0.15
25	6	*Parallel " " " " "	-0.10	+0.10	+0.20	-0.50	-0.50	-0.50

Table III (cont'd)

Channel No.	Station No.**	Gage Position	Stress at Load P in Pounds (ksi) 7,000	12,000	17,000	22,000	24,500	27,000
26	16	Inside of Top Flange	-1.70	-2.30	-3.80	-5.00	-5.70	-6.20
27	16	Inside of Bottom Flange	+3.50	+5.00	+8.30	+10.80	+11.70	[illegible]
28	16	Outside of Top Flange	-1.60	-2.10	-4.50	-5.90	-6.60	-[illegible].20
29	16	Outside of Bottom Flange	+2.05	+5.45	+7.55	+10.35	+10.05	+11.05
30	16	*Parallel - Top Flange	-1.20	-2.50	-3.80	-5.10	-5.60	-6.20
31	16	*Diagonal " "	-0.25	-0.65	-0.25	-1.45	-1.65	-1.85
32	16	*Perpendicular " "	-0.20	+1.40	+1.40	+1.90	+1.90	+2.10
33	16	*Parallel - Bottom of Top Flange	-1.35	-1.35	-2.35	-2.15	-3.55	-3.75
34	16	*Diagonal " " " "	-0.70	-1.20	-1.60	-1.00	-2.10	-2.10
35	16	*Perpendicular " " " "	+0.20	+0.20	+0.40	+0.60	+0.60	+0.70
36	18	Tensile Link Beam - Horizontal	0	0	0	0	0	0
37	4.5	Inside of Bottom Flange	+3.40	+6.20	+9.10	+12.00	+13.40	+15.00
38	13	Top of Cross Bracing	-0.30	-2.10	-3.90	-5.40	-3.30	-6.60
39	13	Bottom of Cross Bracing	-3.75	-6.15	-8.25	-9.15	-7.35	-10.65
	6	Top of Cross Bracing	-3.30	-4.80	-3.00	-7.50	-6.00	-7.20
	6	Bottom of Cross Bracing	-3.60	-4.20	-7.20	-7.50	-8.10	-9.00
42								
43	8	Solid Tube	+5.10	+14.10	+18.30	+18.30	+19.50	+21.60
44	8	Welded Tube	+6.45	+12.15	+16.05	+12.05	+18.15	+22.65
45	18	Hinge Link - Interior	+7.20	+12.30	+17.10	+21.60	+23.40	+25.50
46	18	Hinge Link - Exterior	+3.15	+10.35	+12.15	+19.35	+20.55	+22.95
47	18	Hinge Link - Interior	+7.35	+12.75	+16.65	+21.15	+22.95	+25.05
48	18	Hinge Link - Exterior	+3.60	+10.80	+15.00	+19.20	+20.70	+22.80

*Rosette.

**Indicates distance in feet from centerline of end tube.

Table IV. Stresses for Load Position 4(a)

Channel No.	Station No.**	Gage Position	Stress at Load P in Pounds (ksi) 7,000	12,000	17,000	18,000	19,000	20,000
1	1	*Horizontal - Outside Web	0	+0.10	+0.20	+0.20	+0.20	+0.20
2	1	*Diagonal " "	+1.10	+1.80	+1.60	+2.90	+3.10	+3.20
3	1	*Vertical " "	-0.05	+0.05	+0.05	+0.25	+0.05	+0.15
4	1	*Horizontal - Inside Web	+0.20	0	+0.10	+0.20	0	+0.20
5	1	*Diagonal " "	+1.15	+1.95	+2.85	+3.15	+3.15	+3.35
6	1	*Vertical " "	+0.20	+0.40	+0.40	+0.20	+0.40	+0.60
7	3	*Horizontal - Outside Web	0	+0.20	+0.20	+0.20	+0.20	+0.20
8	3	*Diagonal " "	+0.85	+1.25	+1.85	+2.05	+2.05	+2.25
9	3	*Vertical " "	-0.10	-0.10	-0.10	-0.10	-0.10	-0.10
10	4.5	*Parallel - Bottom of Top Flange	-0.40	-0.80	-1.10	-1.20	-1.30	-1.30
11	4.5	*Perpendicular " " " "	+0.45	+0.15	+0.25	+0.15	+0.15	+0.35
12	4.5	*Diagonal " " " "	-0.35	-0.35	-0.25	-0.45	-0.15	-0.15
13	4.5	*Perpendicular - Top of Top Flange	+0.20	+0.50	+0.90	+0.90	+0.90	+1.00
14	4.5	*Parallel " " " "	-1.60	-2.70	-3.00	-3.50	-3.80	-4.00
15	4.5	*Diagonal " " " "	-0.70	-1.20	-1.60	-1.70	-1.00	-1.00
16	4.5	Outside Top Flange	-1.70	-2.60	-3.80	-3.80	-4.40	-4.30
17	4.5	Inside Top Flange	-1.80	-2.80	-3.80	-3.70	-4.30	-4.60
18	4.5	Outside Bottom Flange	+2.00	+3.70	+5.10	+5.40	+4.90	+6.10
19	6	Bottom Flange of Diaphragm	+0.30	+0.40	+0.40	+0.40	+0.40	+0.40
20	3	*Horizontal - Inside Web	+0.20	+0.20	+0.50	+0.50	+0.40	+0.50
21	3	*Diagonal " "	+0.95	+1.45	+2.05	+2.25	+2.25	+2.45
22	3	*Vertical " "	-0.05	+0.15	-0.05	-0.05	-0.25	-0.05
23	6	*Perp. - Center of Web of Diaphragm	0	0	0	0	0	0
24	6	*Diagonal " " " " "	-0.05	-0.05	-0.05	-0.05	-0.05	-0.05
25	6	*Parallel " " " " "	0	-0.10	0	-0.30	-0.10	0

Table IV (cont'd)

Channel No.	Station No.**	Gage Position	Stress at Load P in Pounds (ksi) 7,000	12,000	17,000	18,000	19,000	20,000
26	16	Inside of Top Flange	-1.15	-3.75	-5.55	-5.95	-6.45	-6.85
27	16	Inside of Bottom Flange	+4.00	+7.40	+10.60	+11.30	+12.00	+12.70
28	16	Outside of Top Flange	-2.10	-4.10	-7.10	-7.60	-7.10	-8.50
29	16	Outside of Bottom Flange	+4.90	+7.90	+9.80	+11.60	+12.10	+12.80
30	16	*Parallel - Top Flange	-2.05	-4.85	-7.05	-7.55	-7.05	-8.45
31	16	*Diagonal " "	-1.90	-3.30	-4.20	-4.60	-4.95	-4.20
32	16	*Perpendicular " "	-0.55	-0.85	-1.05	-1.15	-1.15	-1.25
33	16	*Parallel - Bottom of Top Flange	-0.85	-1.25	-1.75	-1.85	-1.05	-2.15
34	16	*Diagonal " " " "	+0.20	+0.50	+0.90	+1.00	+1.00	+1.10
35	16	*Perpendicular " " " "	+1.30	+2.40	+3.50	+3.00	+4.10	+4.40
36	18	Tensile Link Beam - Horizontal	0	+0.20	0	0	+0.50	0
37	4.5	Inside of Bottom Flange	+2.30	+4.00	+5.30	+5.00	+6.00	+6.40
38	13	Top of Cross Bracing	+0.45	-1.50	-0.75	-0.75	-0.75	-1.05
39	13	Bottom of Cross Bracing	-3.45	-4.95	-6.75	-7.05	-7.05	-4.95
40	6	Top of Cross Bracing	-1.50	-1.50	-1.50	-1.50	-1.80	-1.50
41	6	Bottom of Cross Bracing	-2.25	-3.75	-4.35	-5.25	-5.25	-2.85
42								
43	8	Solid Tube	+7.80	+12.90	+15.90	+17.10	+17.40	+17.40
44	8	Welded Tube	+6.60	+10.80	+16.20	+17.70	+18.00	+18.30
45	18	Hinge Link - Interior	+11.40	+18.30	+25.50	+24.30	+28.50	+27.30
46	18	Hinge Link - Extedior	+10.05	+16.35	+22.05	+24.15	+25.35	+26.55
47	18	Hinge Link - Interior	+11.70	+15.90	+24.90	+26.70	+24.90	+29.10
48	18	Hinge Link - Exterior	+9.90	+16.50	+22.20	+23.70	+24.90	+26.70

*Rosette.

**Indicates distance in feet from centerline of end tube.

Table V. Stresses for Load Position 4(b)

Channel No.	Station No.**	Gage Position	Stress at Load P in Pounds (ksi) 7,000	12,000	17,000	18,000	19,000	20,000
1	1	*Horizontal - Outside Web	0	0	+0.20	0	+0.20	+0.30
2	1	*Diagonal " "	+1.05	+1.95	+2.65	+2.85	+3.05	+3.25
3	1	*Vertical " "	0	0	+0.20	-0.10	+0.20	-0.10
4	1	*Horizontal - Inside Web	0	0	+0.10	0	0	+0.10
5	1	*Diagonal " "	+1.25	+2.05	+2.75	+2.95	+3.15	+3.45
6	1	*Vertical " "	0	0	-0.40	-0.40	-0.40	-0.40
7	3	*Horizontal - Outside Web	0	0	0	0	+0.20	+0.10
8	3	*Diagonal " "	+0.80	+1.30	+2.00	+2.00	+2.20	+2.30
9	3	*Vertical " "	+0.30	+0.50	+0.20	+0.20	+0.50	+0.50
10	4.5	*Parallel - Bottom of Top Flange	-0.50	-0.80	-0.30	-0.30	-0.30	-1.10
11	4.5	*Perpendicular " " " "	-0.30	-0.10	0	0	0	0
12	4.5	*Diagonal " " " "	+0.20	+0.10	+0.50	0	+0.10	+0.20
13	4.5	*Perpendicular - Top of Top Flange	+0.65	-0.45	-0.25	-0.25	-0.05	-0.25
14	4.5	*Parallel " " " "	-1.50	-2.00	-3.50	-2.40	-3.50	-3.80
15	4.5	*Diagonal " " " "	-0.55	-0.05	-0.45	-0.65	-0.65	-0.75
16	4.5	Outside Top Flange	-1.00	-2.00	-3.50	-3.40	-4.10	-3.70
17	4.5	Inside Top Flange	-1.60	-2.60	-3.80	-3.60	-4.20	-3.80
18	4.5	Outside Bottom Flange	+2.00	+3.50	+5.10	+5.40	+5.90	+6.10
19	6	Bottom Flange of Diaphragm	+0.15	-0.05	+0.25	+0.15	+0.25	+0.05
20	3	*Horizontal - Inside Web	+0.10	+0.40	+0.40	+0.50	-0.30	-0.30
21	3	*Diagonal " "	+0.90	+1.40	+2.00	+2.30	+2.40	+1.70
22	3	*Vertical " "	-0.10	0	0	0	+0.20	0
23	6	*Perp - Center of Web of Diaphragm	-0.05	-0.05	-0.05	-0.05	-0.05	-0.05
24	6	*Diagonal " " " " "	+0.05	+0.05	+0.05	+0.05	+0.15	+0.05
25	6	*Parallel " " " " "	+0.35	+0.05	+0.05	+0.55	+0.15	+0.55

Table V (cont'd)

Channel No.	Station No.**	Gage Position	Stress at Load P in Pounds (ksi) 7,000	12,000	17,000	18,000	19,000	20,000
26	16	Inside of Top Flange	-1.20	-3.30	-4.80	-5.20	-5.50	-5.90
27	16	Inside of Bottom Flange	+3.60	+7.70	+10.90	+10.70	+11.40	+12.90
28	16	Outside of Top Flange	-2.85	-4.85	-7.25	-7.75	-7.25	-8.65
29	16	Outside of Bottom Flange	+4.70	+7.80	+9.70	+10.50	+12.20	+12.90
30	16	*Parallel - Top Flange	-2.60	-4.60	-6.70	-7.20	-7.50	-7.90
31	16	*Diagonal " "	-1.45	-2.55	-3.45	-3.75	-3.75	-3.95
32	16	*Perpendicular " "	-0.35	-0.45	-0.55	-0.55	-0.38	-0.35
33	16	*Parallel - Bottom of Top Flange	-0.70	-0.40	-0.90	-0.20	-0.80	-0.20
34	16	*Diagonal " " " "	+0.25	+0.35	-0.35	-0.35	-0.25	-0.35
35	16	*Perpendicular " " " "	+1.30	+2.30	+3.20	+3.40	+3.70	+2.90
36	18	Tensile Link Beam - Horizontal	0	+0.40	+0.10	+0.20	+0.20	0
37	4.5	Inside of Bottom Flange	+2.35	+3.95	+5.45	+4.95	+6.15	+6.35
38	13	Top of Cross Bracing	+0.90	+0.30	-0.30	-0.30	-0.30	-0.30
39	13	Bottom of Cross Bracing	-2.85	-4.35	-3.75	-3.15	-2.25	-3.75
40	6	Top of Cross Bracing	-0.75	-1.35	-1.65	-1.65	-1.95	-1.35
41	6	Bottom of Cross Bracing	-0.90	-2.40	-0.60	-1.50	-0.90	-1.80
42								
43	8	Solid Tube	+9.15	+13.95	+17.55	+18.15	+16.95	+19.05
44	8	Welded Tube	+4.05	+11.55	+16.35	+18.15	+19.05	+19.05
45	18	Hinge Link - Interior	+11.10	+17.70	+24.90	+23.70	+27.90	+26.70
46	18	Hinge Link - Exterior	+9.75	+13.65	+21.75	+23.85	+22.65	+26.85
47	18	Hinge Link - Interior	+11.85	+19.05	+25.35	+24.45	+28.65	+29.85
48	18	Hinge Link - Exterior	+9.90	+16.50	+19.50	+23.70	+22.50	+27.30

*Rosette.

**Indicates distance in feet from centerline of end tube.

Table VI. Midspan Deflections

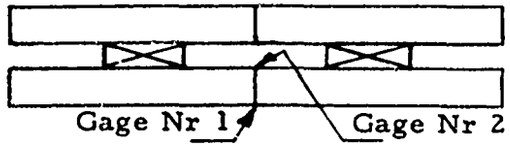

P	Deflection (Inches)									
	Load Position									
	1		2		3		4A		4B	
Pounds	Gage 1	Gage 2	Gage 1	Gage 2	Gage 1	Gage 2	Gage 1	Gage 2	Gage 1	Gage 2
2,000	0.471	0.465	-	-	-	-	-	-	-	-
7,000	1.450	1.500	0.658	0.656	1.019	1.010	1.398	1.369	1.332	1.326
12,000	2.330	2.254	1.098	1.089	1.672	1.654	2.216	2.181	2.154	2.130
17,000	3.235	3.148	1.465	1.447	2.306	2.278	2.988	2.953	2.958	2.918
18,000	-	-	-	-	-	-	3.205	3.163	3.151	3.109
19,000	-	-	-	-	-	-	3.378	3.338	3.351	3.274
19,500	3.715	3.638	-	-	-	-	-	-	-	-
20,000	-	-	-	-	-	-	3.548	3.499	3.490	3.435
22,000	4.160	4.188	1.884	1.864	2.973	2.923	-	-	-	-
24,500	4.612	4.638	2.105	2.080	3.224	3.173	-	-	-	-
27,000	5.103	5.147	2.248	2.218	3.495	3.450	-	-	-	-

Table VII. Dynamic Stresses

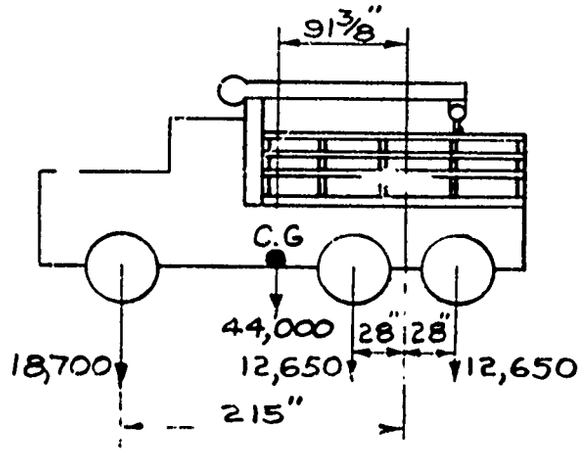

BRIDGE TRUCK

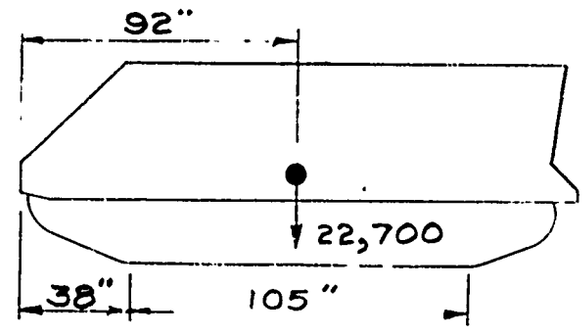

M-113 APC

Channel No.	Station No. ***	Gage Position	Bridge Truck Stress (ksi) Run No. 1	Bridge Truck Run No. 2	Bridge Truck Run No. 3*	M113 APC Stress (ksi) Run No. 1	M113 APC Run No. 2	M113 APC Run No. 3*
1	1	**Horizontal - Outside Web	+0.9	+1.0	+0.8	+0.5	+0.4	+0.5
2	1	**Diagonal " "	+5.2	+5.6	+3.2	+4.5	+5.0	+2.5
3	1	**Vertical " "	-1.5	-2.0	-1.5	-2.2	-2.1	-1.0
4	1	**Horizontal - Inside Web	+0.5	+0.5	+0.5	+0.1	+0.3	+0.2
5	1	**Diagonal " "	+4.8	+4.0	+4.0	+3.0	+4.0	+1.4
6	1	**Vertical " "	-0.5	-1.0	-1.0	-0.2	-0.2	-0.5

Table VII (cont'd)

Channel No.	Station No.***	Gage Position	Bridge Truck Stress (ksi) Run No. 1	Bridge Truck Run No. 2	Bridge Truck Run No. 3*	M1113 APC Stress (ksi) Run No. 1	M1113 APC Run No. 2	M1113 APC Run No. 3*
7	3	**Horizontal - Outside Web	+0.5	+0.2	+0.2	+0.3	+0.6	0
8	3	**Diagonal " "	+3.0	+3.9	+3.2	+3.8	+4.0	+1.8
9	3	**Vertical " "	-1.0	-1.3	-0.3	-1.0	-1.0	-0.4
10	4.5	**Parallel - Bottom of Top Flange	-1.7	-2.0	-1.5	-1.2	-1.7	-0.5
11	4.5	**Perpendicular " " " "	+3.7	+3.8	+0.5	+1.0	+2.7	+0.1
12	4.5	**Diagonal " " " "	+2.2	+2.7	+0.2	+1.4	+1.5	+0.4
13	4.5	**Perpendicular - Top of Top Flange	-	-	-	-	-	-
14	4.5	**Parallel " " " "	-4.8	-5.5	-4.5	-5.0	-6.1	-3.1
15	4.5	**Diagonal " " " "	-	-	-	-	-	-
16	4.5	Outside Top Flange	-	-	-	-	-7.5	-3.1
17	4.5	Inside Top Flange	-5.5	-5.3	-4.5	-5.0	-7.2	-3.2
18	4.5	Outside Bottom Flange	+9.0	+9.5	+7.2	+9.3	+8.3	+4.9
19	6	Bottom Flange of Diaphragm	+0.7	+1.0	+0.5	-1.6	-1.2	+0.3
20	3	**Horizontal - Inside Web	+1.0	+0.9	+0.7	+0.5	+0.9	+0.2
21	3	**Diagonal " "	+3.0	+3.2	+2.7	+2.8	+2.9	+1.5
22	3	**Vertical " "	-1.0	-0.8	-0.5	-0.4	-0.4	-0.5
23	6	**Perp. - Center of Web of Diaphragm	+0.1	-1.0	0	-0.5	-0.5	-0.3
24	6	**Diagonal " " " " "	+0.4	-0.8	0	+1.0	+1.0	-0.3
25	6	**Parallel " " " " "	-	-	-	±0.5	±0.5	-
26	16	Inside of Top Flange	-5.7	-6.5	-5.2	-5.3	-5.0	-5.0
27	16	Inside of Bottom Flange	+10.7	+11.0	+9.7	+9.2	+9.1	+8.0
28	16	Outside of Top Flange	-5.0	-7.1	-6.0	-6.0	-5.6	-5.7
29	16	Outside of Bottom Flange	+9.5	+10.7	+8.7	+10.0	+9.0	+10.0

Table VII (cont'd)

Channel No.	Station No.***	Gage Position	Bridge Truck Stress (ksi) Run No. 1	Bridge Truck Run No. 2	Bridge Truck Run No. 3*	M113 APC Stress (ksi) Run No. 1	M113 APC Run No. 2	M113 APC Run No. 3*
30	16	**Parallel - Top Flange	-5.0	-5.0	-4.5	-5.3	-5.1	-5.0
31	16	**Diagonal " "	-4.5	-3.0	-1.2	-2.2	-2.5	-1.4
32	16	**Perpendicular " "	-5.7	-2.6	+1.8	+1.0	-1.2	+0.8
33	16	**Parallel - Bottom of Top Flange	-3.0	-3.7	-3.0	-3.2	-2.8	-2.8
34	16	**Diagonal " " " "	-	-	-	-	-	-
35	16	**Perpendicular " " " "	+5.2	+5.2	0	+1.2	+2.2	+1.0
36	18	Tensile Link Beam - Horizontal	+0.9	+0.8	+1.0	+0.6	+0.8	+0.2
37	4.5	Inside of Bottom Flange	+7.2	+7.0	+6.6	+6.5	+8.1	+4.8
38	13	Top of Cross Bracing	+6.3	+7.5	+3.6	+6.0	+6.6	+4.8
39	13	Bottom of Cross Bracing	-9.0	-9.6	-9.3	-11.7	-6.6	-7.5
40	6	Top of Cross Bracing	+3.3	+3.0	-0.9	+5.1	+3.6	+6.0
41	6	Bottom of Cross Bracing	-8.4	-8.7	-7.2	-11.1	-7.5	-3.9
42			-	-	-	-	-	-
43	8	Solid Tube	+16.5	+16.5	+15.0	+15.6	+9.3	+12.0
44	8	Welded Tube	+19.8	+17.1	+17.4	+12.9	+15.6	+9.3
45	18	Hinge Link - Interior	+28.5	+26.4	+22.8	+19.5	+18.0	+18.0
46	18	Hinge Link - Exterior	+21.6	+24.6	+20.4	+23.4	+19.5	+22.2
47	18	Hinge Link - Interior	+24.9	+27.0	+22.5	+19.5	+19.5	+18.3
48	18	Hinge Link - Exterior	+27.0	+26.4	+20.4	+18.6	+21.0	+17.4

*Static - C. G. of load at centerline of bridge.
**Rosette.
***Refers to the horizontal distance, in feet, from the centerline of the end tube.

The wheeled vehicle was an M-139 bridge truck loaded to a gross weight of 44,000 pounds (Fig. 16). Crossing speeds were limited to a crawl because only the inside, dual wheels of each rear axle were on the bridge. This created an extreme condition of weight (Class 22) and eccentricity, but the stresses show no areas of concern and the stress levels were well within the limits of proportionality (Table VII). Runs 1 and 2 show variations in different crossings, while run 3 shows the static stresses with the center of gravity (C.G.) of the vehicle at the centerline of the bridge.

Dynamic stresses during launching were measured for the folding mechanism and cross bracing under the following conditions:

(1) Nonshock, level, slow.

(2) Normal, level.

(3) Severe shock, level.

(4) Nonshock, 13.5-degree sideslope.

(5) Normal, 13.5-degree sideslope.

(6) Severe shock, 13.5-degree sideslope.

No failures occurred during these launchings, and measured stresses were well below critical limits (see Table VIII for results of conditions 1 and 6). The bridge was examined after each launch and showed no apparent distress. All launches were made with the folding cylinder in the bridge half away from the launcher. The double-centered hinge functioned as predicted and was stable throughout the cycle.

During the initial stages of cycling, yielding occurred in the channel legs at the mounts for the cylinder beam and link beam. Elongation of the bolt holes was also noted. Shear plates 1/8-inch thick were added as well as four more bolts per beam. Fig. 25 shows the revised mount for the link beam. The cylinder beam mounts were similarly modified. Both areas were subjected to more than 1000 cycles without further evidence of distress.

Several weld failures occurred during the cycling including failure of the weld at the link beam and cross-bracing mounts. The welds were generally of poor quality, or incorrect in size and type, or both. The only modification was the addition of load distribution plates at the upper,

Table VIII. Bridge, Dynamic-Launching Stresses

Gage No.	Gage Position	Stress (ksi) Level Nonshock	Stress (ksi) 13.5° Sideslope Severe Shock
49	Link Beam, Web	-14.5	-16.0
50	Link Beam, Flange	-13.0	-11.0
51	Link Beam, Horizontal*	+2.5	+3.5
52	Link Beam, Diagonal*	-5.5	-10.0
53	Link Beam, Perpendicular*	+2.0	+7.0
54	Tensile Link	+11.0	+8.5
61	Tensile Link	+12.0	+12.0
55	Vertical Cross Bracing, Top, Station 13**	-3.5	-7.0
56	Vertical Cross Bracing, Bottom, Station 13**	-	-
57	Vertical Cross Bracing, Top, Station 6**	+2.5	+3.0
58	Vertical Cross Bracing, Bottom, Station 6**	-1.5	-2.0
59	Horizontal Cross Bracing, Long Tube	-2.0	-3.0
60	Horizontal Cross Bracing, Short Tube	-2.0	+2.0
62	Sliding Tube	-8.0	-9.0
63	Sliding Tube	-9.0	-11.5
64	Rotating Beam, Tension Flange	+12.5	+15.0
65	Rotating Beam, Compression Flange	-7.0	-8.0

*Rosette.

**Refers to the horizontal distance, in feet, from the centerline of the end tube

cross-bracing mounts. The other areas were repaired without modification and performed properly throughout the remainder of the test.

Instability was found in the folding hinge during launching cycles in which the folding cylinder was in the bridge half nearest the launcher. Two configurations that stabilized the mechanism were tried: A gear-toothed arrangement proved to be superior (Fig. 26). Under normal operating conditions, including operation on upslopes and downslopes, the maximum hydraulic pressure in the folding cylinder was 2700 pounds per square inch (psi) but under severe shock would reach the relief-valve setting of 3000 psi.

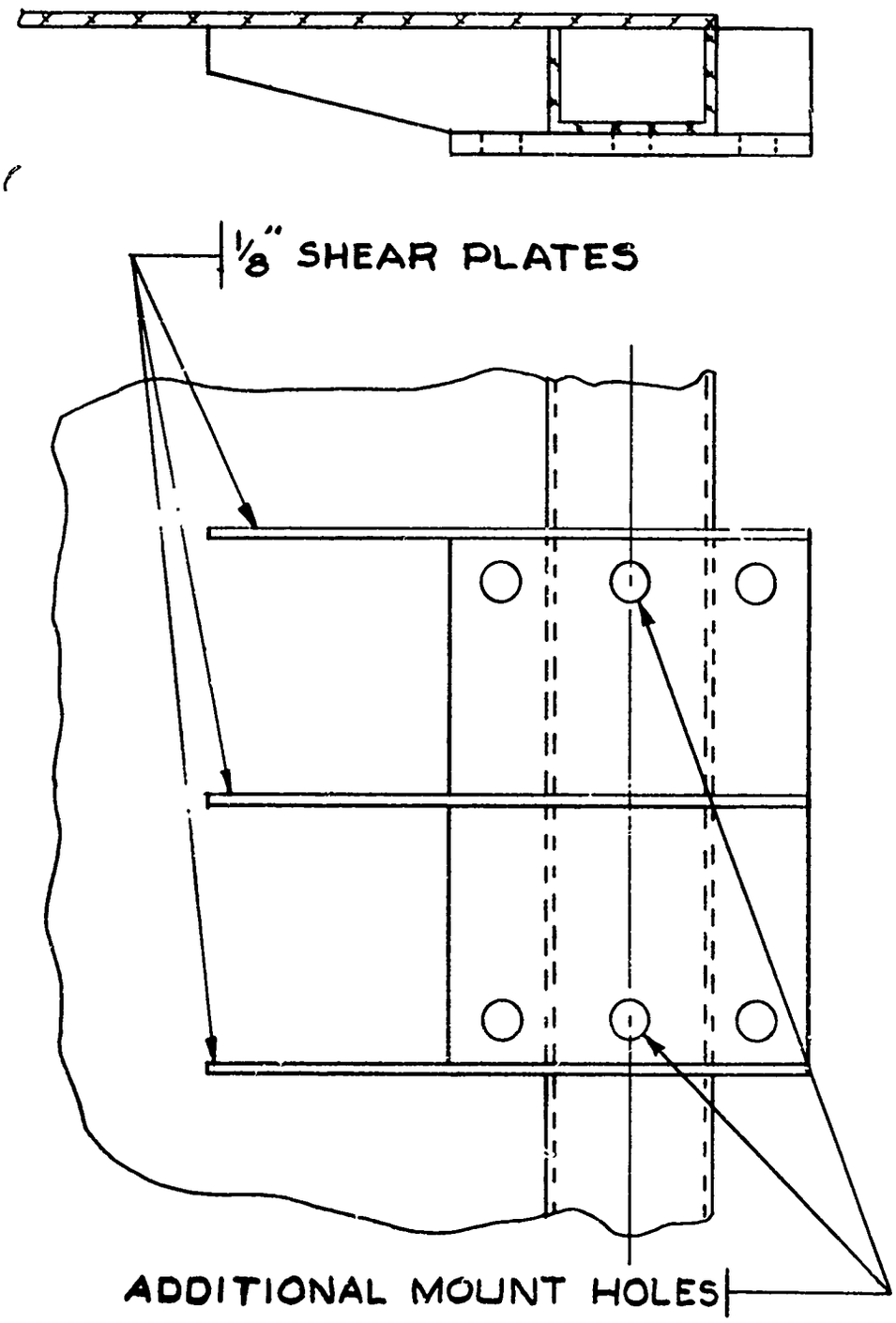

Fig. 25. Modified link beam mount.

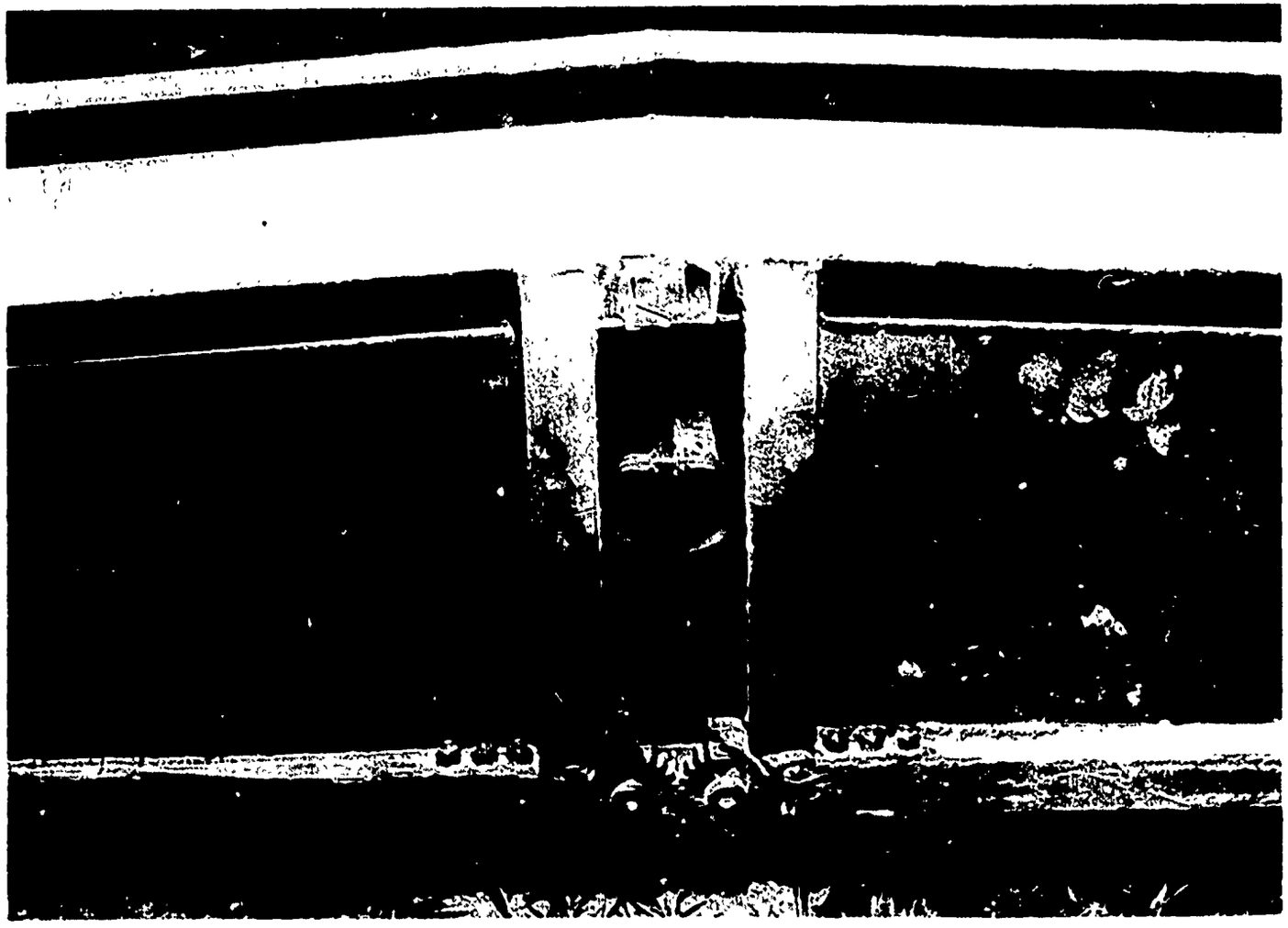

P7704

Fig. 26. Final hinge arrangement.

Traffic testing with the loaded APC revealed no inherent weakness, but one end tube and the outside edge of the deck extrusion at the end of the bridge started to collapse. Damage to the end tube occurred only with the APC crossing at speeds of 20 miles per hour and above. Damage to the deck extrusion occurred when the APC started crossing with only the inside edge of the track (the steel cleats) in contact with the deck. Local collapse was induced by the removal of too much metal during fabrication, weakening the edge, and preventing the extrusion from carrying its full capacity in truss action.

The damaged areas were repaired; but, redesign was not deemed necessary, because the damage was the result of extremely high crossing speeds and unreasonable eccentricity. However, the damage did not jeopardize the structural integrity of the bridge.

The nonslip, treadway wearing surface was approximately 20 percent worn off at the completion of 500 test crossings. The treadway was still serviceable at that time and performed very well. Wheeled vehicles did not affect the coating, but tracked vehicles scraped it off if they turned while on the bridge.

b. Launcher. The physical characteristics of the launcher with or without the bridge as indicated are as follows (Fig. 27):

(1)	Initial weight of launcher	18,300 pounds
(2)	Final weight	
	(a) Without bridge	20,250 pounds
	(b) With bridge	23,000 pounds
(3)	Height	
	(a) Without bridge	109-1/4 inches
	(b) With bridge	136-1/2 inches
(4)	Width	123-1/2 inches
(5)	Length	
	(a) Without bridge	209-1/2 inches

Crew	2
Weight	
Without Bridge	20,250 lb.
With Bridge	23,000 lb.
Width	123-1/2 in.
Length	
Without Bridge	209-1/2 in.
With Bridge	249 in.
Height	
Without Bridge	109-1/4 in.
With Bridge	136-1/2 in.
Center of Gravity (from noseline)	
Horizontal	
Without Bridge	83-1/2 in.
With Bridge	90 in.
Vertical	
Without Bridge	38 in.
With Bridge	49 in.

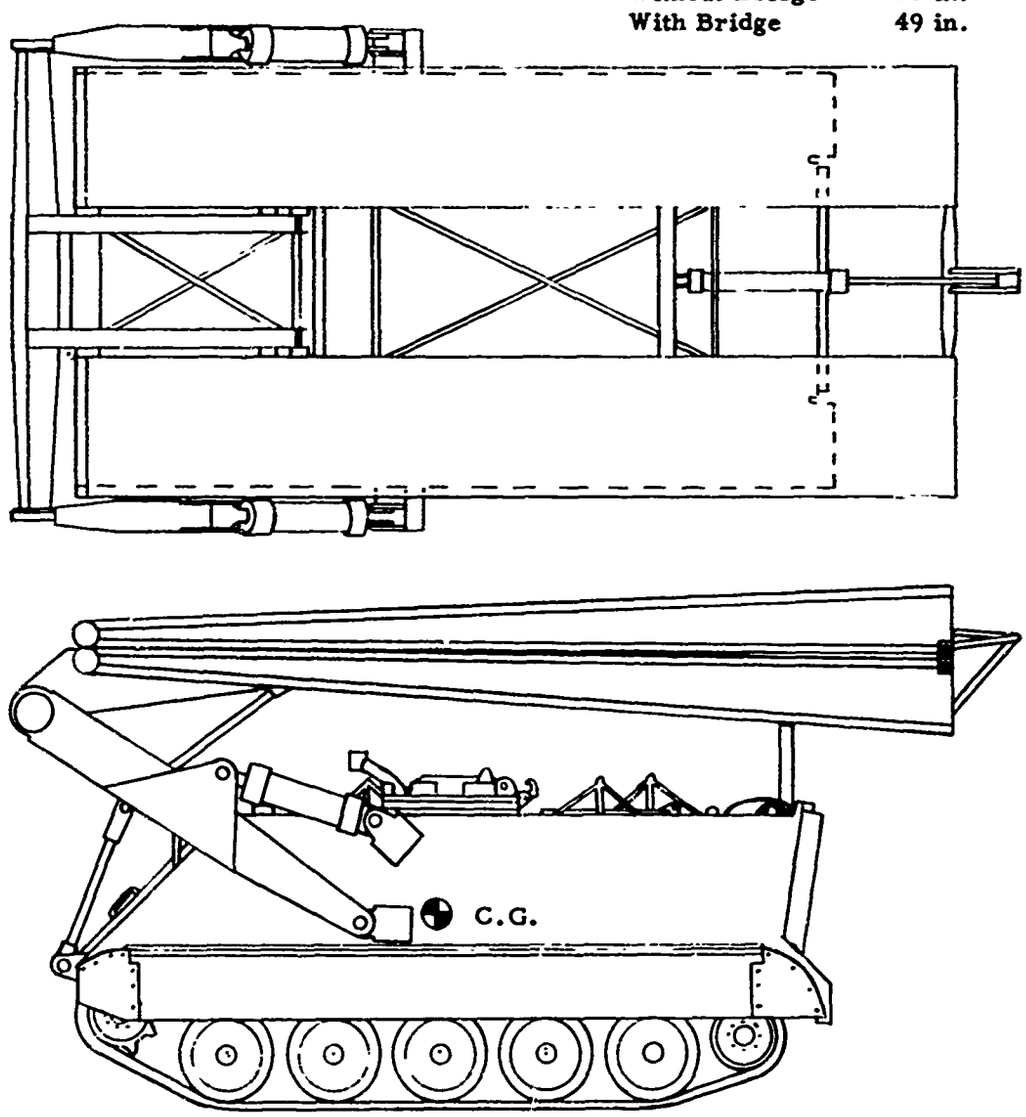

Fig. 27. General data.

(b) With bridge 249 inches

(6) Center of Gravity (from noseline)

(a) Horizontal

1. Without bridge 83-1/2 inches

2. With bridge 90 inches

(b) Vertical

1. Without bridge 38 inches

2. With bridge 49 inches

Weights of launcher components were recorded at assembly and are as follows:

		(pounds)
(1)	Launching beam	171
(2)	Tongue frame w/crossbeam	250
(3)	Rotating link	50
(4)	Short-tongue link	50
(5)	Long-tongue link	55
(6)	Launching cylinder	163
(7)	Cylinder clevis	25
(8)	Cylinder mount	54
(9)	Launching-beam mount	51
(10)	Aluminum pins (6-3" and 6-2")	43
(11)	Bridge seat	21

		(pounds)
(12)	Launching-beam retainer plate	17
(13)	Reservoir assembly	190
(14)	Lock cylinder w/pins	58
(15)	Hydraulic oil	200

Since none of the parts are particularly heavy, it was possible to assemble the mechanism by hand. Generally, this was done during the test as disassembly and assembly became necessary.

Water testing was initiated by checking flotation of the completed launcher without additional modification (Fig. 21). The static floating attitude gave approximately 4 inches of freeboard on the right front of the vehicle and approximately 24 inches at the left rear. Additional weight was added to the left rear increasing the forward freeboard; but it was still unsatisfactory. A combination surfboard-float was added (Fig. 24). Static freeboard was acceptable, and freeboard while under way was excellent (Fig. 22); but this configuration would not allow launching of the bridge without removal of the surfboard-float. A split arrangement was installed which allowed launching while the surfboard float was in place (Fig. 28). Operational characteristics while the launcher was in the water compared favorably with a combat-loaded M-113 APC.

Approximately 125 water entries and exits were made for varying conditions without any deficiencies or failures.

Water operation of the launcher without the bridge was checked briefly to insure that all operating conditions were as good as or better than with the bridge. All phases of performance, including turning radius and response, top speed, and water entry and egress, were superior. Forward freeboard was increased approximately 1 inch while aft freeboard was increased approximately 2 inches. Stability and overall performance compared closely with that of a standard M-113 APC.

Dynamic testing of the launching mechanism produced recorded stresses generally below the predicted values. Table IX gives the results of three conditions: level, nonshock; level, severe shock; and sideslope, severe shock. On the basis of these results, the thickness of material used in the three mechanism links was reduced from 3/8-inch to

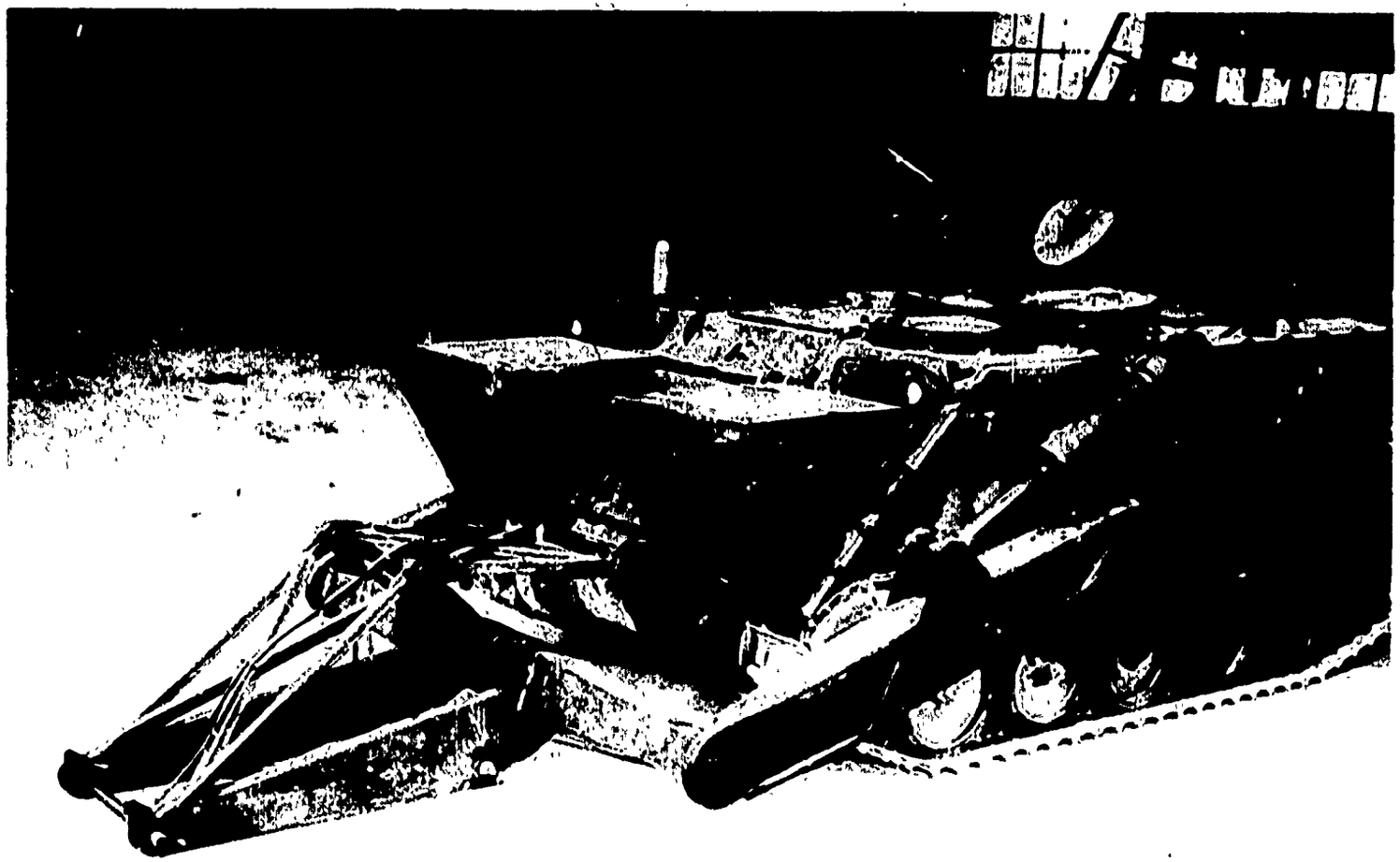

P7901

Fig. 28. Final surfboard-float arrangement.

Table IX. Launching Mechanism Dynamic Stresses

Channel No.	Gage Position*	Stress (ksi) Level Nonshock	Level Severe Shock	12° Sideslope Severe Shock
1	Cylinder Mount, Front, Vertical**	-1.8	+1.0	-2.0
2	" " " Diagonal**	+8.0	-8.5	+9.0
3	" " " Horizontal**	-1.0	-1.0	-1.0
4	" " Rear	+2.0	+2.0	+1.5
5	" " Top, Perpendicular**	-	+7.0	-
6	" " " Diagonal**	-	-3.0	-
7	" " " Parallel**	-	+3.0	-
8	Launch Arm Mount, Front, Vertical**	+1.5	+1.5	+1.2
9	" " " " Diagonal**	-1.5	-1.5	-1.0
10	" " " " Horizontal**	+1.5	+3.0	+1.2
11	" " " Rear	-3.5	-2.5	-3.0
12	" " " Top, Perpendicular**	-	+1.0	-
13	" " " " Diagonal**	-	+3.0	-
14	" " " " Parallel**	-	-2.0	-
15	Launch Arm, Top, Inboard, Sta 2	-11.0	-12.0	-10.2
16	" " " " "	-7.0	-7.5	-6.0
17	" " " Outboard, "	-2.5	-2.5	-3.0
18	" " Outboard, Sta 2	-3.5	-3.5	-5.0
19	" " Bottom, Outboard, Sta 2	-6.5	-8.0	-7.5
20	" " " " "	-5.0	-6.0	-6.4
21	Launch Arm, Bottom, Inboard, Sta 2	-4.0	-4.5	-6.0
22	" " Top, Sta 4	-0.8	+1.0	+0.5
23	" " Bottom, Sta 4	-6.0	-6.5	-8.0
24	" " Top, Sta 6	+6.0	+7.5	+7.2

Table IX (cont')

Channel No.	Gage Position*	Stress (ksi) Level Nonshock	Level Severe Shock	12° Sideslope Severe Shock
25	Launch Arm, Bottom, Sta 6	-7.0	-8.5	-9.0
26	Crossbeam, End, Top	-3.5	-3.5	-5.0
27	" " Rear	-3.0	+3.5	-5.0
28	" " Bottom	+4.0	+4.0	+5.0
29	" " Front	-2.0	-3.0	+6.0
30	" Center, Top	-5.5	-7.0	-5.8
31	" " Rear	+19.2	+20.0	+20.0
32	" " Bottom	+5.5	+4.0	+5.8
33	" " Front	-15.0	-14.0	-12.1
34	Tongue Frame, Top, Sta 1.1	-2.0	-2.0	-3.0
35	" " Bottom, Sta 1	+1.0	+2.0	+3.0
36	" " Top, Sta 4.5	-2.5	-2.5	-3.0
37	" " Bottom, Sta 4.5	+1.5	+2.0	+3.0
38	" X-Bracing, Port, Bottom, Sta 2.2	-1.0	+1.5	-6.5
39	" " " " Sta 4.1	-1.2	+1.0	+4.0
40	" " " Inboard, Sta 2.2	-	-	-
41	" " " " Sta 4.1	-2.2	-2.5	+3.5
42	Rotating Link, Port, Top, Sta 1.8	+9.5	+9.5	+12.0
43	" " " Outboard, Sta 1.8	+6.5	+6.5	+11.0
44	" " Stbd, Bottom, Sta 1.8	+2.4	+2.5	+7.0
45	" " " Inboard, Sta 1.8	+0.5	+1.0	+1.0
46	" " X-bracing, Port, Top, Sta 1.1	-2.0	-2.5	+7.0
47	" " " " Outboard, Sta 1.1	+1.0	+1.5	+2.0
48	" " " Stbd, Outboard, Sta 2.3	+5.5	+7.0	+7.0

Table IX (cont'd)

Channel No.	Gage Position*	Stress (ksi) Level Nonshock	Level Severe Shock	12° Sideslope Severe Shock
49	Rotating Link, X-bracing, Stbd, Bottom, Sta 2.3	+5.8	+7.5	+6.1
50	Short Tongue Link, Port, Outboard, Sta 1	-4.0	-4.0	-6.0
51	" " " " Bottom, Sta 1	-5.0	-4.5	-8.3
52	" " " Stbd, Top, Sta 1	-10.5	-11.0	-9.8
53	" " " " Outboard, Sta 1	-	-	-
54	Long Tongue Link, Port, Outboard, Sta 2.2	-4.5	-4.0	+5.0
55	" " " " Bottom, Sta 2.2	+2.8	-4.0	-2.5
56	" " " Stbd, Outboard, " "	+5.5	-	+6.5
57	" " " " Bottom, " "	+2.5	-	+5.5
58	" " " Port, Top, " "	+5.5	-	+4.5
59	" " " " Outboard, " "	+6.0	-	+5.5
60	" " " Stbd, Outboard, " "	+7.0	-	+8.0
61	" " " " Inboard, " "	+4.5	-	+6.0
62	" " " X-bracing, Port, Outboard, Sta 1	+1.5	-	+2.5
63	" " " " " Bottom, Sta 1	-	-	+2.0
64	" " " " " " Sta 2.1	+7.0	-	+9.0
65	" " " " " Outboard, Sta 2.1	+7.5	-	+8.5

*Gage locations are given for the launched position. Stations are measured in feet from the rear pinhole of the described piece.

**Rosette.

1/4-inch, and the top and bottom plates on the launching beams were reduced from 1/2-inch to 1/4-inch. The resulting increase in stress to approximately 20 ksi would not be as great as the maximum recorded.

Hydraulic pressure measured at the pump varied from 2800 psi while the bridge was being retrieved on an 18-degree upslope at idle speed to the relief pressure of 3300 psi while the bridge was being retrieved on a 16-degree downslope under shock conditions. Pressure at the pump for normal operation on level ground ranged from 3100 psi to 3300 psi depending on the operating speed and the operator.

No failures were experienced during the dynamic-stress test. However, during cycling tests there were two mechanism failures, and several items were modified to correct minor deficiencies or to ease maintenance.

All of the hydraulic tubing was changed from aluminum to steel to correct leaks at the fittings. The tubing was re-routed on the outside of the vehicle to eliminate the need for its removal in case of maintenance requiring access through the front and top-bolted engine hatches.

Ball poppet relief valves were replaced by a sliding-spool type to eliminate noise and chatter and give better reseat characteristics. Flow-regulator rates were altered to obtain different timing during launching and retrieving. The control-valve spools were modified for better metering characteristics. However, further improvement was desirable. Therefore, a smaller valve bank was installed in an attempt to improve control. The installation did not perform satisfactorily, and no alternate could be located.

A weld seam in the reservoir split after 170 cycles. Examination of the weld showed porosity and undersize as a result of the weld having been ground smooth for appearance. The faulty area was ground out and replaced, and the remaining welds were covered with new weld to bring them up to proper size.

No design changes were made, and no further problems arose throughout the remainder of the test.

The hydraulic filter element was changed from a 15-micron nylon unit to a 30-micron steel unit. The change was made because cleaning facilities were not available for nylon elements in the field.

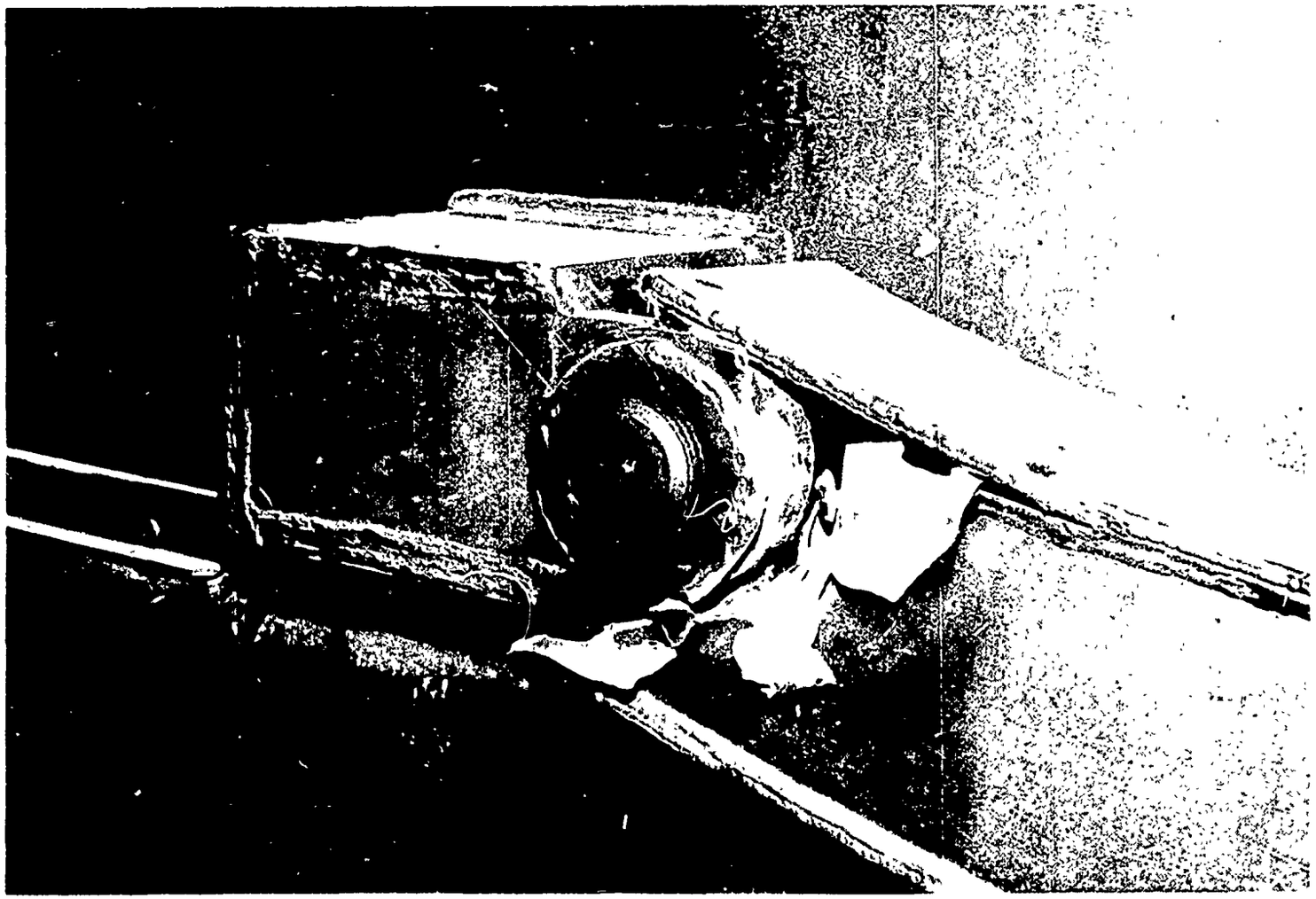

P5775

Fig. 29. Failure of right-side launching beam offer 448 cycles.

The right-side launching beam failed at the hull mount after 448 cycles (Fig. 29). The fracture appeared to be a compression failure with the aluminum parting on a 45-degree line adjacent to a welded bearing plate. This area was not strain gaged, but a check was made on the design computations which indicated a maximum compressive stress of 30 ksi and a maximum tensile stress of 8 ksi. However, since the fracture was adjacent to a weld, it is probable that the effective yield stress was reduced in the heat-affected zone.

This limited data and the nonavailability of complete characteristics of the alloy did not allow a conclusive failure theory. There was speculation that the fracture was the result of flexural fatigue aggravated by a stress concentration at the end of the flange (Fig. 30).

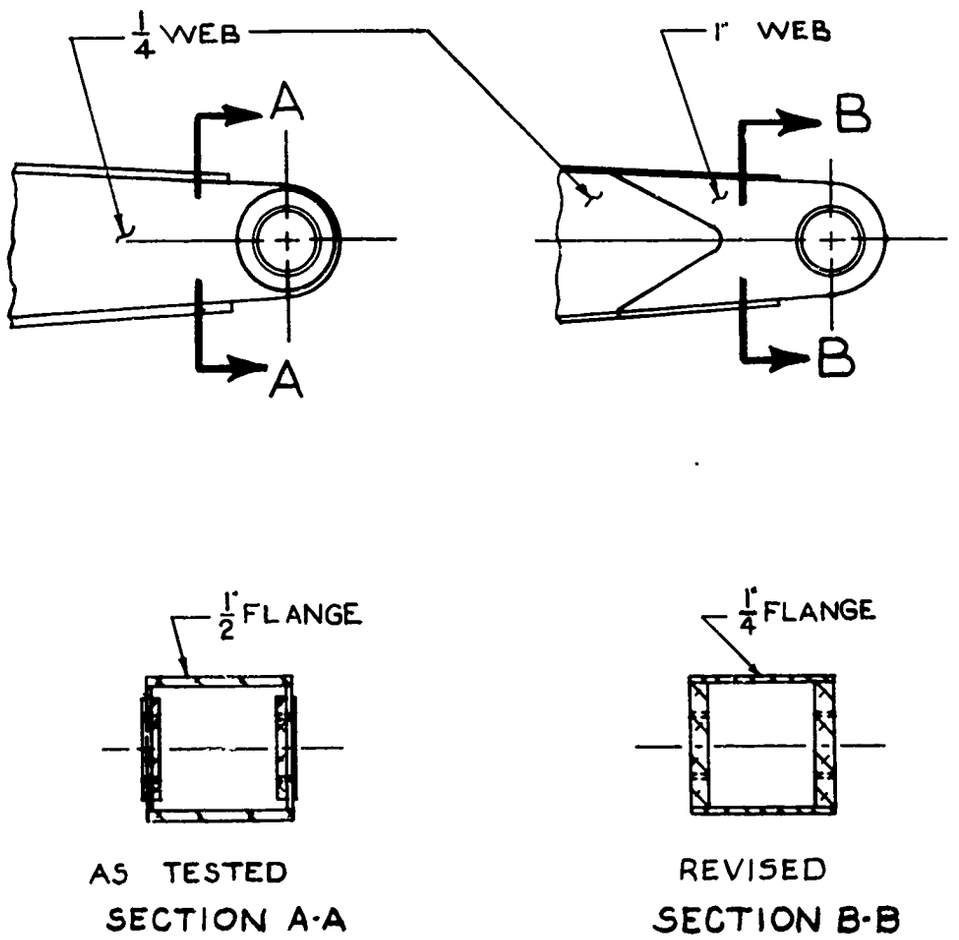

Fig. 30. Revised launching beam.

The failure caused racking of the mechanism (Fig. 31) and bent the end plate and trunnion mount on the left end of the tongue-frame crossbeam (Fig. 32). The racking action gave a permanent set in torsion to the rotating link. The link was cold straightened by a press, and the end plate and trunnion were cold straightened by driving. The crushed end of the launching beam was replaced with 1/2-inch web plates; the unfailed, left-side, launching-beam webs were stiffened with 1/4-inch plates. This arrangement still required the use of 1/2-inch-thick bearing plates to be welded on at the pinhole. For cost reduction and ease of fabrication, the web plates on a production model would be 1 inch thick (Fig. 30). The 1/2 inch webs were strain gaged during subsequent testing (Gage No. 48, Table X).

Scoring of one launching cylinder rod occurred after approximately 600 launchings. The cylinder was disassembled and burrs were removed at the lips of the scores on the rod. It was not practical to try to grind out the scores because they were too deep. The resulting undersize rod would not have allowed a proper seal. The parts were cleaned, examined, and reassembled. All original parts were used.

The rod had shown evidence of sliding against an anodized surface in the head. Since the seal is protected by a rod scraper, it must be assumed that the scoring agent did not enter from outside. It is possible and reasonable that the anodized surface, an abrasive oxide surface harder than the chrome-plated rod, initiated the scoring. Loose particles, found trapped between the seal and scraper, could have caused additional scoring.

The same condition occurred again at nearly 700 cycles. This time the anodized surface was machined off and the bushing was removed. The rod was again deburred but the scores, up to 0.006 inch deep, remained. The seal showed effects of the scoring, but it was reinstalled to determine how long it could last under this abrasive condition. Further cycling produced no leakage and no additional rod scoring.

The opposite-side launching cylinder operated without malfunction throughout the test.

After 945 cycles, the left end plate of the crossbeam sheared (see arrow, Fig. 32). No other damage was sustained, and the plate was rewelded with a larger weld. The right end plate was also rewelded as insurance against a similar failure. No other action was taken since the failure was precipitated by bending caused during the launching-beam failure and subsequent straightening during repair.

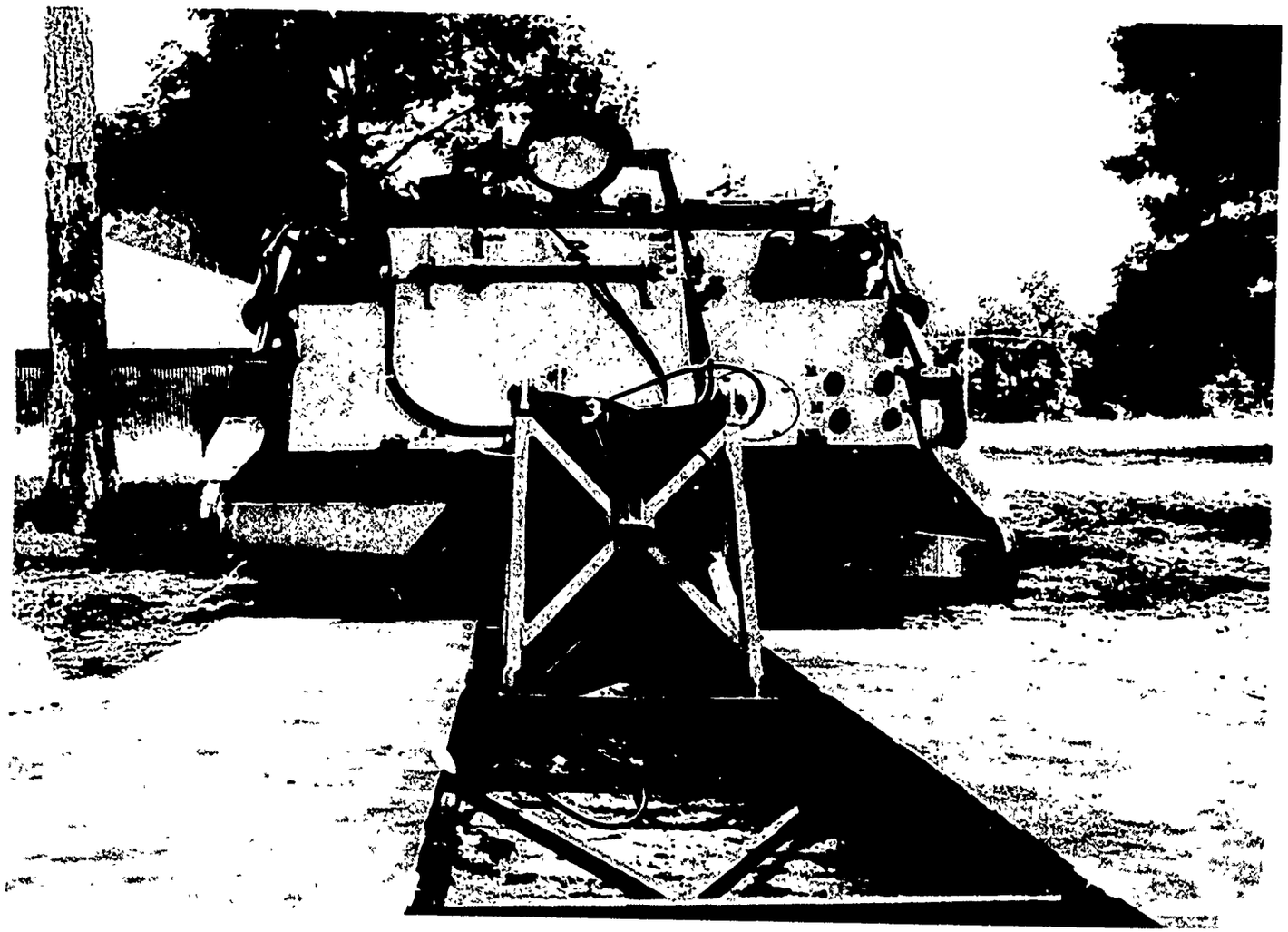

P5774

Fig. 31. Racking of mechanism caused by failure of launching beam.

Fig. 32. Bending of crossbeam end plate and trunnion pin. P5778

Table X. Dynamic, Side-Mount Stresses
(M-113A1 Launcher)

Gage No.	Stress (ksi)		
	Level Nonshock	Level Severe Shock	13° Sideslope Severe Shock
1	-6.6	-6.8	-8.0
2	-4.7	-5.0	-7.0
3	+2.0	+1.6	+1.3
4	+5.0	+4.7	+4.9
5	+9.0	+6.1	+7.0
6	+9.0	+8.1	+9.2
7	-6.0	-5.5	-7.0
8	-6.0	-5.9	-5.8
9	-3.0	-3.0	+4.9
10	+1.5	+0.6	+0.7
11	+3.5	+3.6	+3.8
12	+3.0	+3.1	+3.3
13	+1.5	+2.0	-2.0
14	+1.0	+1.6	-1.2
15	-0.8	-0.5	-1.1
16	-2.0	-1.3	-3.4
17	-3.3	-2.1	-4.2
18	-5.0	-4.0	-5.2
19	0	-0.7	-0.6
20	0	0	±0.1
21	+0.8	+1.2	+1.0
22	+1.0	+1.9	+1.3
23	-6.0	-5.9	-4.8
24	-4.0	-4.1	-4.3
25	-6.0	-6.1	-7.5
26	-4.1	-5.1	-5.2
27	-1.0	-1.0	-4.1
28	+1.0	-2.7	+2.5
29	+1.0	-0.8	-1.0
30	-2.9	-4.0	-4.2
31	-3.0	-4.0	-7.8
32	±1.5	-1.4	-1.5
33	+0.3	+0.5	+0.8
34	+0.2	+0.2	+0.5
35	+0.9	+1.1	+1.0

Table X (cont'd)

Gage No.	Stress (ksi)		
	Level Nonshock	Level Severe Shock	13° Sideslope Severe Shock
36*	+0.1	0	0
37*	-0.4	-0.4	-0.5
38*	+5.0	+5.3	+5.7
39*	-3.2	-3.3	-3.8
40*	-9.3	-9.8	-11.2
41*	-0.8	-1.0	-1.0
42*	+0.5	+0.2	-0.5
43*	+3.0	+3.0	+3.7
44*	+0.2	+0.3	±0.5
45	+4.0	+4.2	+5.0
46	+2.8	+2.8	+3.2
47	-1.0	-1.3	-1.5
48**	-2.3	-3.5	-4.5

*Rosette.
**Located on launching beam at mount pin.

At the completion of testing, 1030 launching cycles and 141 miles had been logged. All mileage resulted from moving the unit from one test or demonstration site to another. No formal mobility tests were conducted.

Investigation of the M-113A1 (diesel) was undertaken to determine the design changes that were necessary and what effect they would have on the present design. The only change was in the location of the reservoir. This change was necessitated by the relocation of the power takeoff.

While this investigation was under way, a desire was expressed by the Army Materiel Command (AMC) to investigate the possibility of developing a launching kit for field installation. The major consideration for a launching kit was to change the side and front mounts from welded to bolted connections. Nearly all other points of connection were already bolted.

A bolted side and front connection was designed and fabricated for mounting on an M-113A1 APC. A new M-113A1 APC was acquired to establish compatibility of the M-113 mechanism and to test the design changes.

To gain as much information as possible from a single installation, one side mount was bolted (the left side) and the other was welded (Figs. 33 and 34). The front mount was fully bolted but could be welded if desired. The mechanism was installed incorporating all design changes except the revision to the links and launching beams.

Dynamic stress recordings were made for the same non-shock, shock, and sideslope shock conditions as before; results of these tests appear in Table X (Strain gage locations are shown in Fig. 35). A rosette placed on the welded mount was gage numbers 45, 46, and 47. The rosette was located on the bottom of the lower mount adjacent to the connecting weld and approximately 3 inches behind the forward edge. Gage number 48 was placed on the centerline of the launching beam in front of the mount pin. This was the area that previously failed under compression. The recorded stresses for the 1/2-inch webs gave no further insight to failure in the 1/4-inch webs.

Slippage was noted in the bolted side connection during the first bridge-launching attempt. Clearance between the bolts and holes was held to a maximum of 0.028 inch but was large enough to allow what appeared to be an extreme rotation under reversing loads.

A check of the bolts showed that they had not been properly torqued at assembly. The mount was removed, the mating surfaces were sanded clean, and the mount was replaced. The bolts were torqued to 1000 foot-pounds with no evidence of bolt yielding or hole-thread failure. Cycling under varying conditions during testing did not cause further slippage.

Physical characteristics remained unchanged except for the gross vehicle weight which was increased by 780 pounds to 23,780 pounds. The additional weight was in the basic, diesel-drive components.

Water operation of the launcher with the bridge remained nearly unchanged with one exception. The diesel engine propels the tracks and, thus, the vehicle at a higher speed than the gas engine does. However, as the vehicle speed increases above approximately 2.5 mph, the nose of the vehicle dips. It appears that this condition could continue to the point where water would be shipped through both the engine-air-cooling hatch and

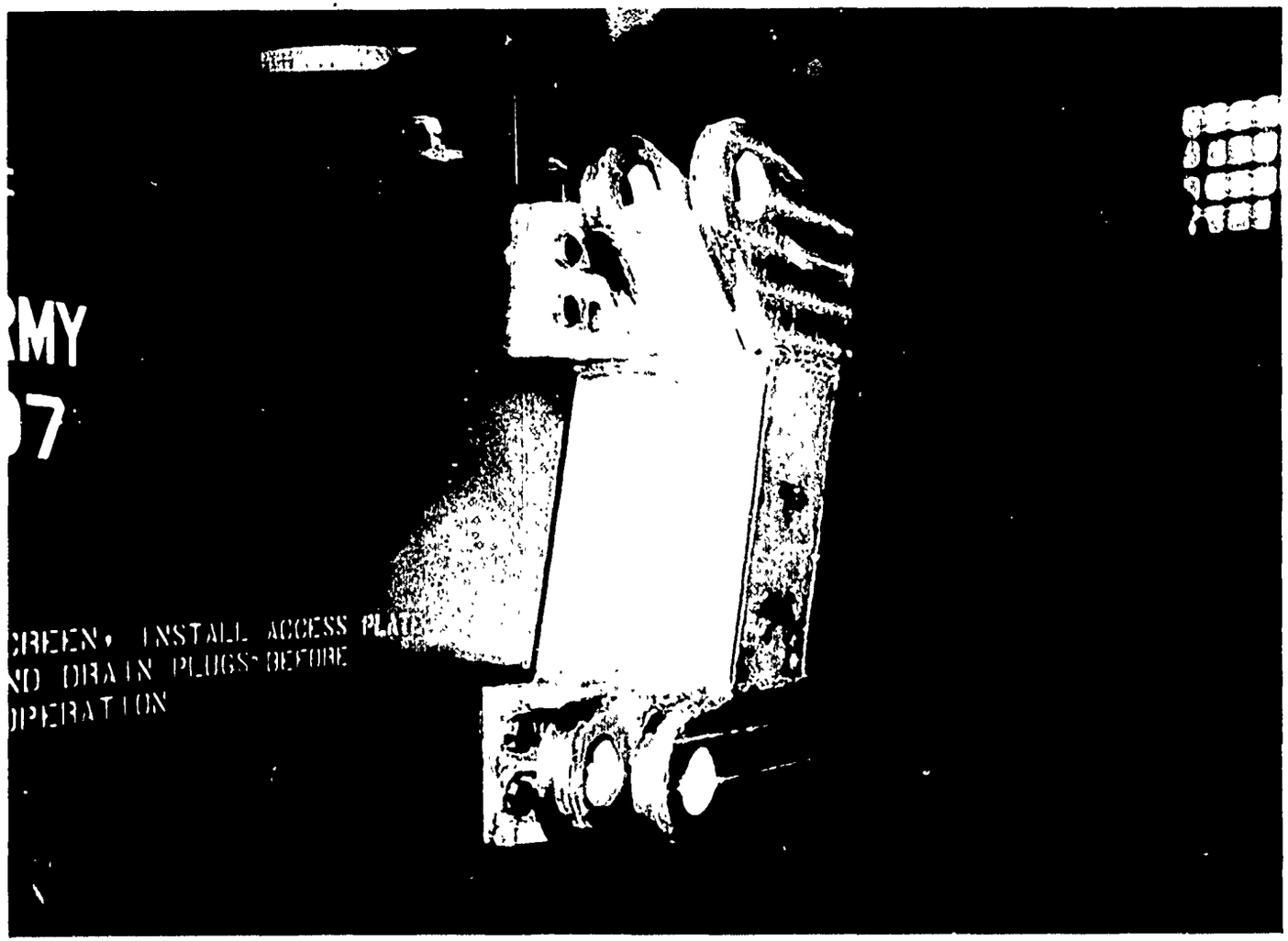

P7947

Fig. 33. Bolted side mount (left side).

P7946

Fig. 34. Welded side mount (right side).

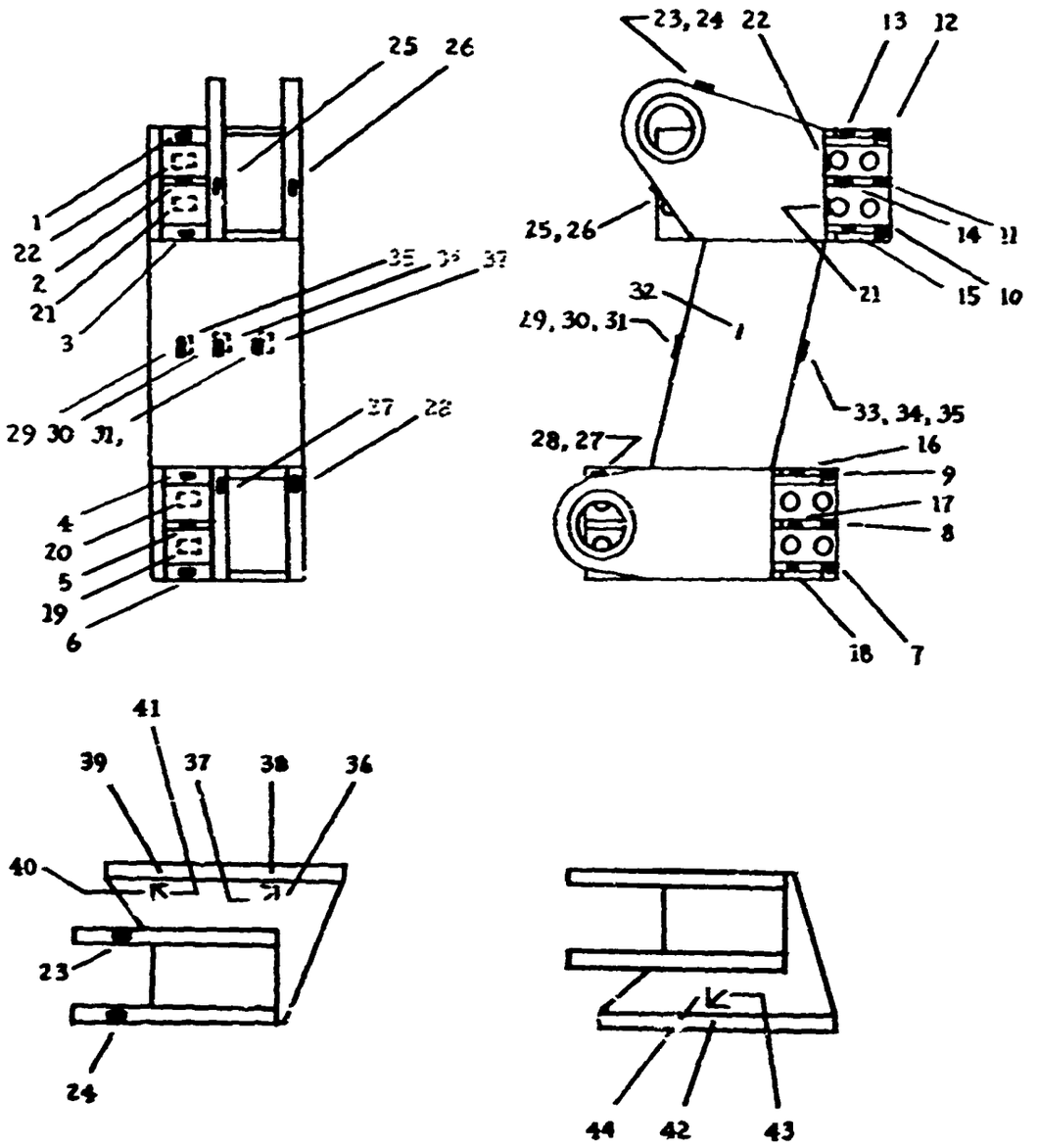

Fig. 35. Strain gage locations.

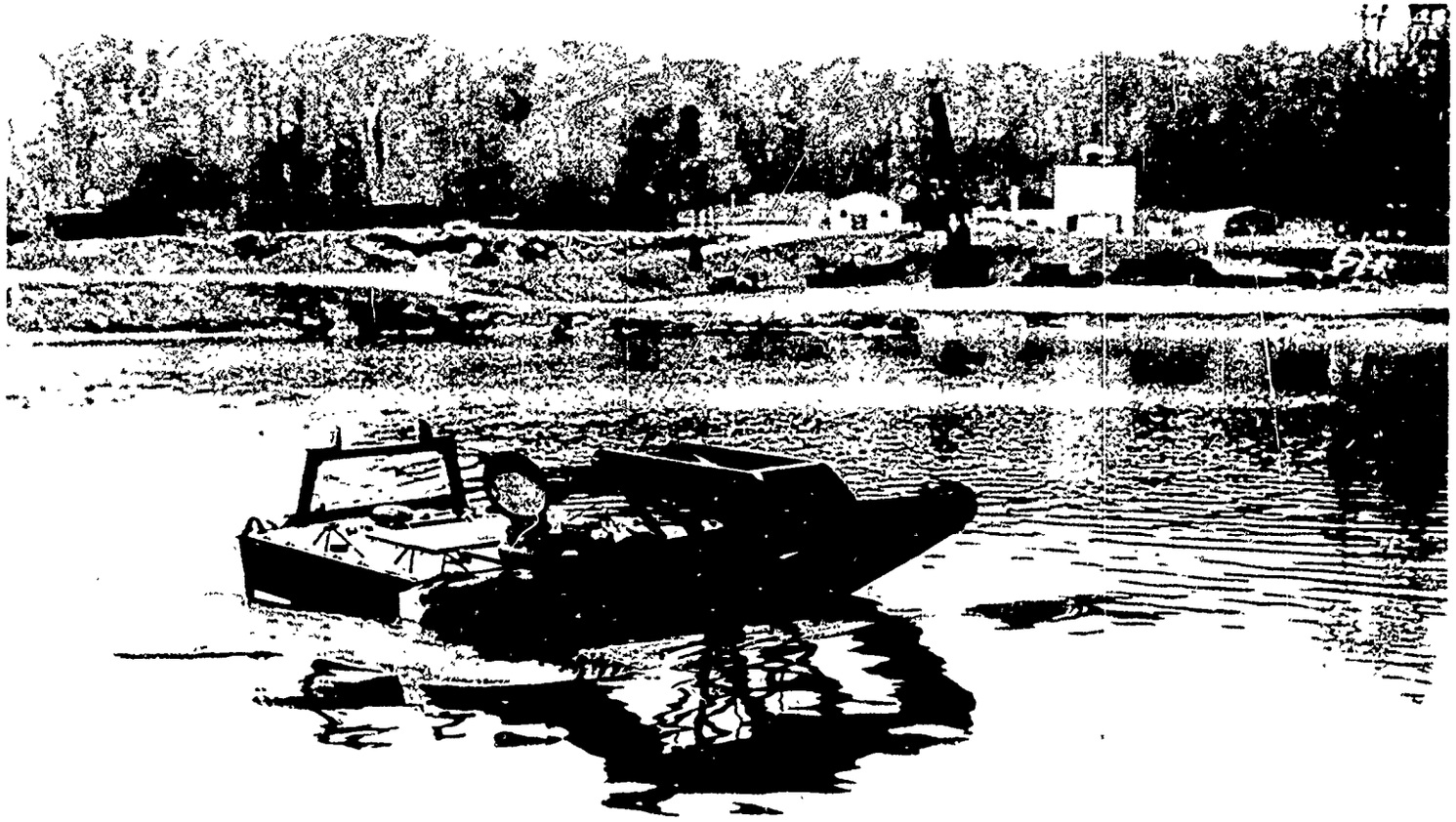

P11448

Fig. 36. The M-113A1 launcher, without bridge, at full speed.

the driver's hatch. Rapid deceleration causes further nose dipping and could possibly cause swamping. A full-width surfboard-float would eliminate nose dipping but, as previously stated, would require removal before the bridge could be launched. A design of this type on the M-113 was eliminated for this reason. Further investigation and testing are under way to resolve this problem.

Water operation of the launcher without the bridge was approximately the same as with a standard vehicle. No unusual precautions were necessary, stability was excellent, and nose dipping at full throttle, while present, was not a problem (Fig. 36).

Testing was completed after nearly 600 launching cycles of the M-113A1. This gave a total of over 1600 cycles on the mechanism and bridge.

III. CONCLUSIONS

7. Conclusions. It is concluded that:

a. Structural testing of both bridge and launcher showed no stresses in excess of accepted allowables.

b. Cycling of the launcher showed that only minor changes were necessary to give satisfactory performance.

c. Control of the bridge and vehicle was quickly learned by untrained operators and drivers.

d. Overall performance was excellent and individual characteristics, within the scope of this test, met or exceeded the requirements stated in the proposed technical and military characteristics.

e. Testing of the experimental model indicates that the M-113 and the M-113A1 marginal-terrain assault bridge and transporting launchers will satisfactorily fulfill their intended mission.

APPENDIX

PROPOSED MILITARY AND TECHNICAL CHARACTERISTICS*

1. The bridge and launcher shall be designed to meet the requirements of paragraphs 7.a., b., and c. of AR 705-15, with Change 1, "Operation of Materiel under Extreme Conditions of Environment."

2. The equipment shall have sufficient ruggedness in design to withstand military service without requirements other than:

a. Organizational maintenance for 1000 miles, 100 hours, or 500 launching cycles, or;

b. Field maintenance for 2000 miles, 200 hours, or 1000 launching cycles, whichever occurs first.

3. The equipment shall be capable of being operated by a crew of two men and launched without exposure of personnel.

4. The equipment shall be capable of being launched and ready for use within five minutes after arrival at the gap site.

5. The equipment shall be capable of being emplaced without site improvement.

6. The equipment shall be capable of spanning gaps up to and including 33 feet.

7. The equipment shall be capable of sustaining Class 12 loads.

8. The equipment shall be capable of being recovered from either end by the launching vehicle with no more than one man exposed.

9. The launcher (vehicle and mechanism) with bridge in travel position will have as low a profile as possible but not to exceed a height of 12 feet.

---

*As extracted from Proposed Small Development Requirement (SDR), dated 10 February 1967, as prepared by MERDC to satisfy a requirement originating in the field.

10. Swimming characteristics with the bridge in travel position will equal that of the Standard M-113.

11. Mobility of the developed equipment shall be equivalent to the M-113.

12. Weight of the launcher with the bridge in travel position will not exceed the weight of the combat-loaded M-113.

13. Turnaround time, assuming no repairs are necessary, shall not exceed 20 minutes beginning from engine shutdown to restarting the engine.

14. Vehicle reaction time shall not exceed two minutes in the intermediate zone.

15. The time required to launch the bridge, once the launcher is positioned at the gap site, shall not exceed three minutes. This interval includes the time required to emplace the bridge, disconnect, and back the launcher away to allow other vehicles to pass.

16. The time for the launcher to remount the bridge into the travel position shall not exceed ten minutes in the intermediate zone. (This includes connection of the bridge hydraulic lines.)

17. Mission reliability shall not be less than 95 percent in intermediate zones for all missions.

18. After the specified vehicle reaction time, the vehicle shall be capable of instantaneous employment. The combat-ready rate shall not be less than 97 percent.

19. Mission duration will depend on the number of vehicles passing over the emplaced bridge but shall be capable of emplacement and utilization for a minimum of 2 days.

20. The bridge shall have an average crossing rate of not less than one vehicle per minute.

21. Degradation from depot storage of one year is not to exceed 3 percent. To place the equipment in operation after one year in depot storage shall require not more than 16 hours of maintenance and after 6 months in field storage shall require not more than 24 hours of direct support maintenance.

UNCLASSIFIED

Security Classification

DOCUMENT CONTROL DATA - R & D

(Security classification of title, body of abstract and indexing annotation must be entered when the overall report is classified)

1. ORIGINATING ACTIVITY *(Corporate author)* Marine & Bridge Division, Military Technology Laboratory, U. S. Army Mobility Equipment Research and Development Center, Fort Belvoir, Virginia	2a. REPORT SECURITY CLASSIFICATION Unclassified 2b. GROUP

3. REPORT TITLE

EXPERIMENTAL MODEL, MARGINAL-TERRAIN ASSAULT BRIDGE AND ARMORED PERSONNEL CARRIER TRANSPORTER AND LAUNCHER

4. DESCRIPTIVE NOTES *(Type of report and inclusive dates)*

Design Test Report

5. AUTHOR(S) *(First name, middle initial, last name)*

Gerald F. Wilber

6. REPORT DATE April 1968	7a. TOTAL NO. OF PAGES 82	7b. NO. OF REFS
8a. CONTRACT OR GRANT NO. b. PROJECT NO. c. Task No. 1G643324D59503 d.	9a. ORIGINATOR'S REPORT NUMBER(S) 1928 9b. OTHER REPORT NO(S) *(Any other numbers that may be assigned this report)*	

10. DISTRIBUTION STATEMENT

This document has been approved for public release and sale; its distribution is unlimited.

11. SUPPLEMENTARY NOTES	12. SPONSORING MILITARY ACTIVITY USAMERDC Fort Belvoir, Va.

13. ABSTRACT

This report presents information on an experimental model of a lightweight, short-span, marginal-terrain assault bridge and transporting launcher. The model tested was a 33-foot bridge span which is transported and launched by an M-113 Armored Personnel Carrier.

The bridge was designed to carry up to Class 15 wheeled or tracked loads across wet or dry gaps up to its full 36-foot length.

The launcher was designed to accompany an armored column through marginal terrain and to place the bridge when needed.

The results of this test of the experimental model shows that the basic concept of a lightweight, short-span, highly mobile assault bridge is valid.

DD FORM 1 NOV 65 1473 REPLACES DD FORM 1473, 1 JAN 64, WHICH IS OBSOLETE FOR ARMY USE.

UNCLASSIFIED

Security Classification

14. KEY WORDS	LINK A ROLE	LINK A WT	LINK B ROLE	LINK B WT	LINK C ROLE	LINK C WT
Assault bridge						
Armored personnel carrier						
Class 15 loads						
Gap crossing						
Marginal terrain environment						