AFML-TR-68-88

AD 671522

SIMULATION OF HIGH VELOCITY IMPACTS ON THIN TARGETS

H. F. Swift
University of Dayton

Capt. R. F. Prater
Air Force Materials Laboratory

TECHNICAL REPORT AFML-TR-68-88

May 1968

This document has been approved for public release and sale; its distribution is unlimited.

Air Force Materials Laboratory
Air Force Systems Command
Wright-Patterson Air Force Base, Ohio

CLEARINGHOUSE

32

Best
Available
Copy

NOTICES

When Government drawings, specifications, or other data are used for any purpose other than in connection with a definitely related Government procurement operation, the United States Government thereby incurs no responsibility nor any obligation whatsoever; and the fact that the Government may have formulated, furnished, or in any way supplied the said drawings, specifications, or other data, is not to be regarded by implication or otherwise as in any manner licensing the holder or any other person or corporation, or conveying any rights or permission to manufacture, use, or sell any patented invention that may in any way be related thereto.

Copies of this report should not be returned unless return is required by security considerations, contractual obligations, or notice on a specific document.

AD 671 522

SIMULATION OF HIGH VELOCITY IMPACTS ON THIN TARGETS

H. F. Swift, et al

Dayton University
Dayton, Ohio

April 1968

SIMULATION OF HIGH VELOCITY IMPACTS ON THIN TARGETS

H. F. Swift
University of Dayton

Capt. R. F. Prater
Air Force Materials Laboratory

This document has been approved for public release and sale; its distribution is unlimited.

FOREWORD

This report covers research performed on the AFML light-gas gun facility. Some of the individual efforts were pursued by AFML personnel and by students at the Air Force Institute of Technology. The remainder of the effort was conducted by the University of Dayton Research Institute, Dayton, Ohio under Air Force Contract F33615-68-C-1138, Project 7360, Chemistry and Physics of Materials, Task 736006, Hypervelocity Impact Studies. The portion of the research performed by the University of Dayton Research Institute was administered by the AFML with Mr. Alan K. Hopkins as project engineer.

The authors gratefully acknowledge the research efforts of Captains Donald Carey, Craig Turpin, and John Cunningham whose studies were performed while candidates for Master of Science degrees from the Air Force Institute of Technology, Wright-Patterson AFB, Ohio; and the support of the University of Dayton gun range technicians operating the AFML light-gas gun under the direction of Mr. Lewis Shiverdecker.

The manuscript was released by the authors on May 24, 1968 for publication with a University of Dayton report number UDRI-TR-68-18.

This technical report has been reviewed and is approved.

Herbert M. Rosenberg, Chief
Exploratory Studies Branch
Materials Physics Division
AF Materials Laboratory

ABSTRACT

Current interest in investigating impacts of thin structural plates by pellets traveling at velocities of 15 km/sec and above has prompted efforts to simulate the process under laboratory conditions. Pellet and plate debris vaporization that results from such impacts cannot be achieved in the laboratory. A partial laboratory simulation of these impacts can be achieved by substituting easily vaporized materials such as cadmium for the structural materials of direct interest. The AFML Impact Physics Group has developed a series of techniques for carrying out such simulations. Besides measurements of gross damage effects, the velocity, mass, and momentum distributions within the simulated debris clouds can be measured as functions of time after impact. A limited number of typical results for cadmium-on-cadmium impacts are presented.

TABLE OF CONTENTS

	Page
FORWARD	ii
ABSTRACT	iii
LIST OF ILLUSTRATIONS	v
LIST OF TABLES	vi
INTRODUCTION	1
TECHNIQUES AND GENERAL RESULTS	1
Cloud Velocity	2
Cloud Impulse	2
Cloud Energy Content	7
Cloud Density	8
RESULTS OF SELECTED ROUNDS	9
Initial Cloud Study	9
Spray Cloud Momentum Measurements	9
Cloud Trajectory Study	13
IMPROVED CAPABILITIES	16
Vacuum System	16
Trigger Switch	16
Segmenting Plate	16
Precision Timing	16
Image Converter Cameras	21
REFERENCES	22

ILLUSTRATIONS

Figure No.		Page
1a	Set-up for Making Flash X-ray Photographs of a Debris Cloud Dissected by a Single Jaw	3
1b	Set-up for Making Flash X-ray Photographs of a Debris Cloud Dissected by Two Parallel Jaws	4
2	Set-up for Segmenting a Debris Cloud and Measuring Component Velocities	5
3	Flyer Plate Set-up for Measuring Debris Cloud Momentum Deliverable to a Target Plate	6
4	Ballistic Pendulum Set-up for Monitoring Internal Cloud Momentum	8
5	Round 2199 - 3.2 mm Cd Projectile Impacting 1.66 Cd Plate at 6.71 km/sec	10
6	Round 2199 - Geometrically Corrected Pattern of Debris Cloud	11
7	Round 2199 - Cloud Velocity vs. Angle Off Axis Based Upon Single "Point of Origin" Technique	11
8	Double Exposed X-ray Photograph of Flyer Plates in Flight	12
9	Momentum Intensity Distribution of a Debris Cloud Created by Impacting an 0.8 mm Cadmium Plate With a 3.2 mm Diameter Cadmium Sphere at 6.7 km/sec	14
10	Instrument Set-up for Monitoring the Component Velocities of Cadmium Debris Clouds	15

Illustrations (Cont'd)

Figure No.		Page
11	Selected B&W 300 Camera Frames Illustrating Expansion, Action of Splitter Plate, and Subsequent Motion of a Cadmium Debris Cloud	17
12	Flash X-ray of Expanding Cadmium Debris Clouds	18
13	Round 2427 - Outline of Cadmium Debris Cloud From Flash X-rays Corrected for Geometric Distortion	19
14	Round 2427 - Cadmium Debris Velocity as Function of Angle Off Axis	19

LIST OF TABLES

Table No.		Page
1	Summary of Segmented Cadmium Cloud Firings	20

SIMULATION OF HIGH VELOCITY

IMPACTS ON THIN TARGETS

I. INTRODUCTION

Ultra-high velocity impacts of pellets onto thin plates made from common structural materials are of current interest to space operations. At velocities above 15 km/sec such impacts produce shockwaves capable of vaporizing the pellets and much of the launched plate debris. This vaporization cannot be achieved by laboratory-generated impacts between typical pellet and plate materials since velocities are limited to approximately 10 km/sec. Ultra-high velocity impacts are being partially simulated at the AFML hypervelocity impact facility by substituting pellet and plate materials with low sublimation energies that can be vaporized by laboratory-induced shockwaves. Cadmium-on-cadmium impacts have proven to be the most useful combination for this purpose. This report discusses the existing AFML capabilities to conduct experimental investigations in this area and presents pertinent experimental results obtained to date.

II. TECHNIQUES AND GENERAL RESULTS

The AFML Impact Physics Group has investigated the operation of two-layer spaced partical shields for the past two years. A large number of pellet and plate materials have been investigated, principally aluminum (6061-T6), cadmium and copper. The pellets are accelerated by a light-gas gun described in Ref. 1. Dynamic measurements including the velocity, momentum, and energy content of debris clouds generated by thin plate impacts have been measured as functions of the angle off the original trajectory axis. Plans have been made to measure the debris cloud mass distribution.

A fundamental technique that has allowed most of the dynamic cloud measurements is the dissection of the debris cloud. Massive jaws with various configurations are inserted in the path of the debris cloud thereby allowing only predetermined segments of the cloud to pass. In this way individual cloud segments can be separated from the remainder of the cloud for detailed investigation. Figure 1 shows two examples of simple cloud dissection. Figure 1a shows a single jaw set to intercept

half of the cloud. An x-ray photograph taken along the edge of the jaw demonstrates that proper cloud dissection has been achieved. A double jaw was used to achieve the x-ray photograph shown in Figure 1b. Here, two parallel jaws were used to allow only a slice across the central cloud axis to pass. This photograph was the first pictorial evidence showing conclusively that debris clouds are hollow.

A. Cloud Velocity. Initially, attempts were made to measure the velocity of various debris cloud segments by taking two sequential x-ray photographs of developing debris clouds. It appeared that cloud velocity components could be determined by measuring dimensional shifts between the two pictures. The cloud was first split with a dual jaw dissector (similar to Figure 1b) in order to assure that the same cloud segment was viewed in both x-ray photographs. Unfortunately this technique was unsuccessful because neither the apparent point of departure nor the flight direction of the cloud segments were known. Under these circumstances cloud velocity cannot be deduced from overall cloud motion except for motion along the central axis. Later studies have shown that cloud particles appear to eminate from a variety of points at various times during the debris cloud formation. A more sophisticated approach is required to make proper cloud velocity measurements. The method chosen was to use an array of square holes in a line across the impact axis for segmenting the debris cloud. In this way the cloud was divided into a series of narrow debris columns (see Figure 2). The velocity, direction, and departure time for each column was measured independently of the others. A high speed framing camera (one million to four million frames/sec) provided an ample number of photographs to make all necessary measurements (see Figure 11). This technique has been used successfully with particulate, liquid droplet, and vaporous debris clouds.

B. Cloud Impulse. Two experiments have been carried out to measure separate aspects of cloud impulse phenomena. The first consists of suspending an array of small aluminum plates (flyer plates) in the path of an expanding debris cloud (see Figure 3). The velocity imparted to the flyer plates by interaction with the debris cloud is determined from a double exposed x-ray photograph showing the plates in flight. The velocity, initial position, and final mass of the recovered plates are used to determine the impulse content of the debris cloud segments that intercepted the plates. These impulse determinations include the internal impulse of the cloud plus impulse magnification resulting from cloud material and material removed from the plates rebounding upstream from the initial plate positions. Data has been gathered using this technique for clouds from aluminum on aluminum, copper on copper, and cadmium on cadmium impacts. The experiments

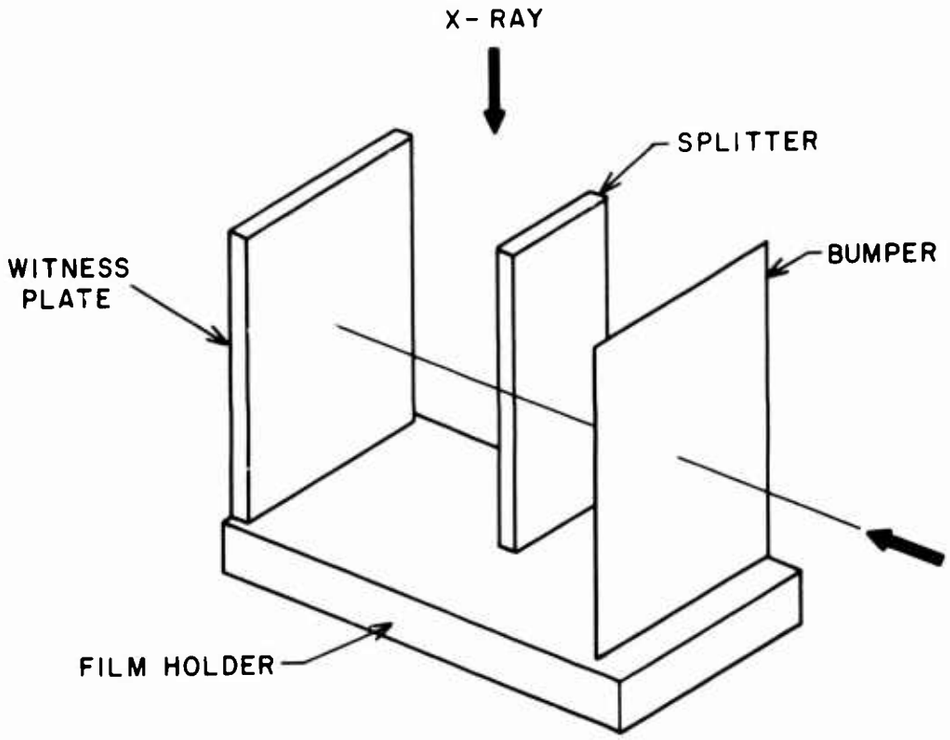

Figure 1a. Set-up for making flash x-ray photographs of a debris cloud dissected by a single jaw.

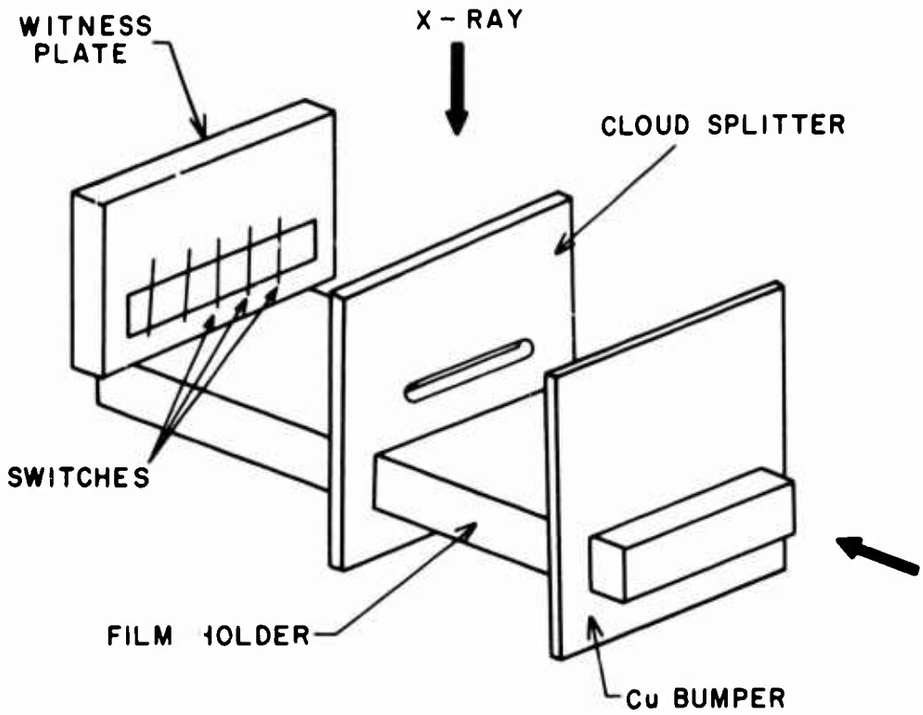

Figure 1b. Set-up for Making Flash X-ray Photographs of a Debris Cloud Dissected by Two Parallel Jaws.

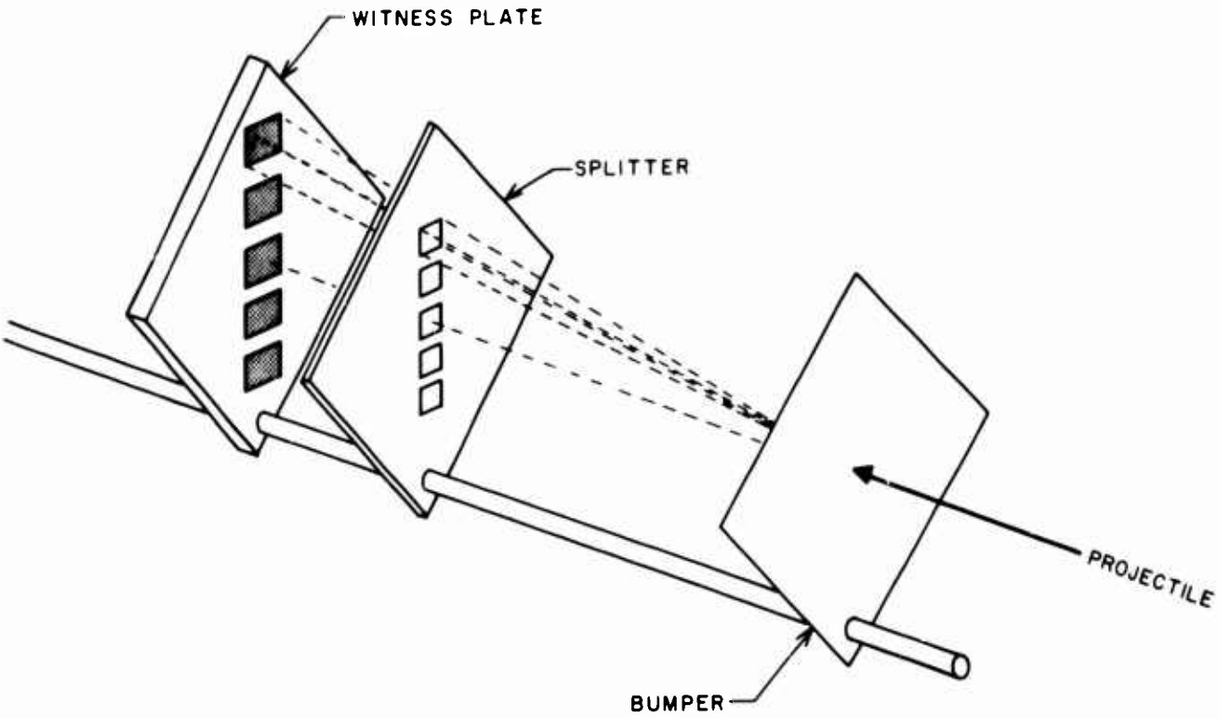

Figure 2. Set-up for segmenting a debris cloud and measuring component velocities.

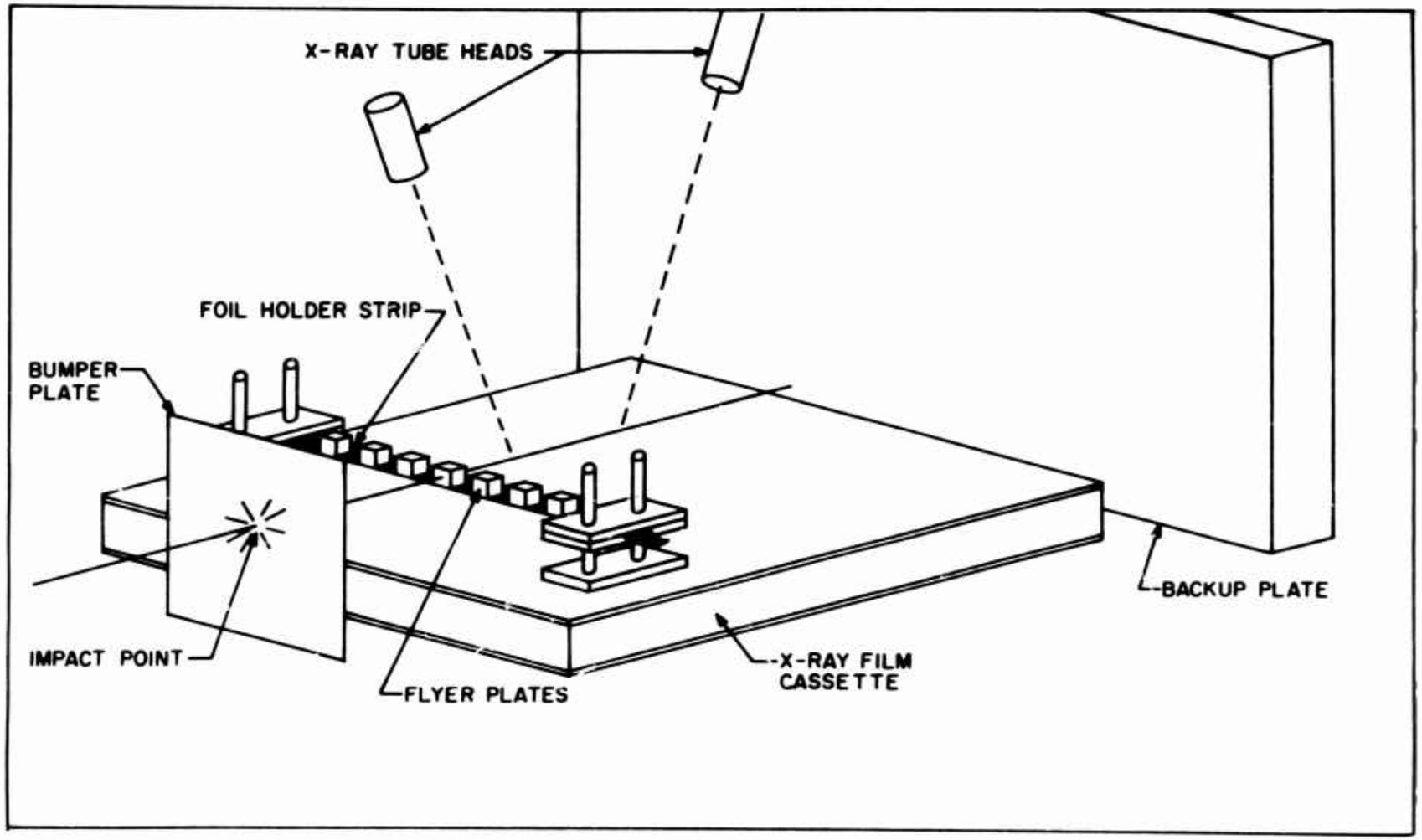

Figure 3. Flyer Plate Set-up for Measuring Debris Cloud Momentum Deliverable to a Target Plate.

are relatively straightforward and can provide up to 14 impulse measurements per firing. These experiments will be repeated in the near future by using a solid plate mounted to intercept the cloud at the original position of the flyer plates. Small holes in the plate will segment the debris cloud. Each segment will strike a flyer plate mounted a short distance behind the solid plate. Impulse determinations from these experiments are expected to be larger than current measurements because of the cloud impulse increase resulting from cloud stagnation against the solid plate. This new measurement technique should accurately determine the impact profile experienced by a solid plate exposed to a debris cloud impact.

The second group of impact measuring experiments involve trapping segments of expanding debris cloud in a ballistic pendulum. The momentum multiplication due to cloud and target materials rebound is eliminated in this experiment by trapping the rebounding materials within the pendulum. A solid plate with a single small opening is used to segment the debris cloud (see Figure 4). Since the cloud was allowed to stagnate against the solid plate, cloud impact monitored by the ballistic pendulum consists of the sum of internal cloud impulse plus impulse multiplication caused by cloud stagnation on the disecting plate. An experiment is planned that will allow a ballistic pendulum to receive a cloud segment without stagnating the remainder of the cloud. A thin-walled tube oriented in the direction of cloud travel will be placed to intersect the cloud segment and conduct it to the ballistic pendulum. A small overhang at the upstream end of the tube will prevent the cloud material from contacting the the inner tube wall and exchanging momentum with it. The remainder of the cloud which has not been intercepted by the tube will be stopped or deflected far enough down stream from the tube opening to prevent stagnation effects from being felt at the tube opening. The impulse measurements from this experiment are expected to include only internal cloud impulse.

Data from all the experiments described above will be used in consort to evaluate internal cloud momentum; momentum multiplication due to rebound of cloud and target material; and momentum multiplication due to cloud stagnation, as functions of position within expanding debris clouds.

C. Cloud Energy Content. Direct measurement of the debris cloud energies has proven to be extremely difficult. It now appears feasible to compute cloud energy from internal cloud momentum and cloud velocity profiles. Since the debris clouds have been shown to be relatively thin shells even at late times in their development, all particles in a local area of the cloud surface must travel at nearly

constant velocities. Independent measurements of cloud density and momentun can, therefore, be used to compute cloud energy. This attempt is scheduled for the near future.

D. Cloud Density. Density profiles of material within an expanding debris cloud would be particularly useful for comparing experimental data with numerical predictions. Although the AFML group has not yet performed direct density measurements, they appear quite feasible. In order to make unambiguous density measurements of debris clouds, the clouds must be sliced and x-rayed. The section is required to assure that the X-rays pass through only a single region of the cloud. Step wedges made from the pellet and plate material must be placed at several locations within view of the X-rays and in the plane of the sectioned cloud for calibrating x-ray film sensitivity. In addition, background X-rays must be taken to establish spatial variation of x-ray background density. Needless to say, x-ray procedures must be generally excellent and identical for all radiographs within a series. When these conditions are met, the technique should be useful for all types of debris clouds.

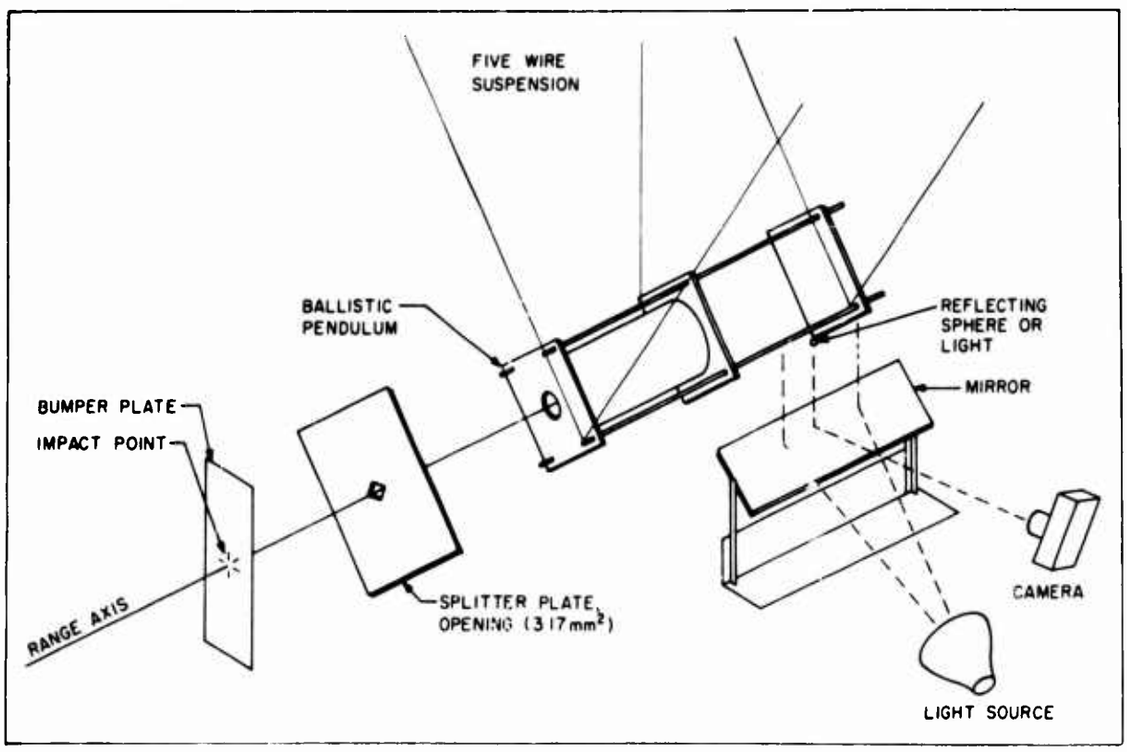

Figure 4. Ballistic Pendulum Set-Up for Monitoring Internal Cloud Momentum.

III. RESULTS OF SELECTED ROUNDS

Several cadmium-on-cadmium rounds have been fired in past studies of debris clouds from thin plate impacts. The detailed description of four of these selected impacts should serve to illustrate the measurement techniques described in Section II above and point out the caution required to correctly interpret some types of data.

A. Initial Cloud Study. The earliest AFML study of spray cloud dynamics resulting from thin plate impacts was performed in 1967 by Capt. Donald Carey[2]. In essence, his experiments consisted of splitting the cloud with a slotted plate and placing witness plates at positions downrange from the splitter. Based upon the pattern of damage seen at various distances from the target, and assuming that the debris particles traveled in straight lines, an apparent "point of origin" of all the particles was determined. Cloud velocity as a function of angle off axis was then determined by the analysis of two sequential flash X-rays again assuming that all particles lay on a straight line trajectory that passed through this "point of origin". Energy as a function of angle was obtained by tedious measurements of the numerous small craters produced in the witness plates. Knowing the velocity and energy distribution of the debris cloud material, it was then possible to calculate the momentum distribution.

This series of experiments involved only one high velocity cadmium-on-cadmium impact, round 2199. The X-rays and geometrically corrected cloud shapes are presented (Figures 5 and 6). No cloud energy distribution determinations were made since the gaseous cadmium impact created no measurable crater damage on witness plates. The velocity profile is shown in Figure 7. More recent experiments indicate that the velocity data is invalid because a single departure point for the cloud material was assumed. It is not possible to obtain accurate measures of the cloud velocity as a function of position off-axis without splitting the cloud in a more elaborate manner.

B. Spray Cloud Momentum Measurement. The AFML Impact Physics Group is carrying out a series of direct measurements of momentum distribution in spray clouds. The arrangements for two current experimental setups are illustrated in Figures 3 & 4. The first series of experiments consists of allowing debris clouds to impact flyer plates sending them downrange at velocities which were determined by pairs of sequenced flashed X-rays (see Figure 8). These data yield measurements of internal cloud impulse, plus the impulse from the cloud and plate material that rebounded upstream. The second series of experiments utilized a thick plate to segment an expanding debris cloud and conduct a segment of it into a ballistic pendulum. Impulse

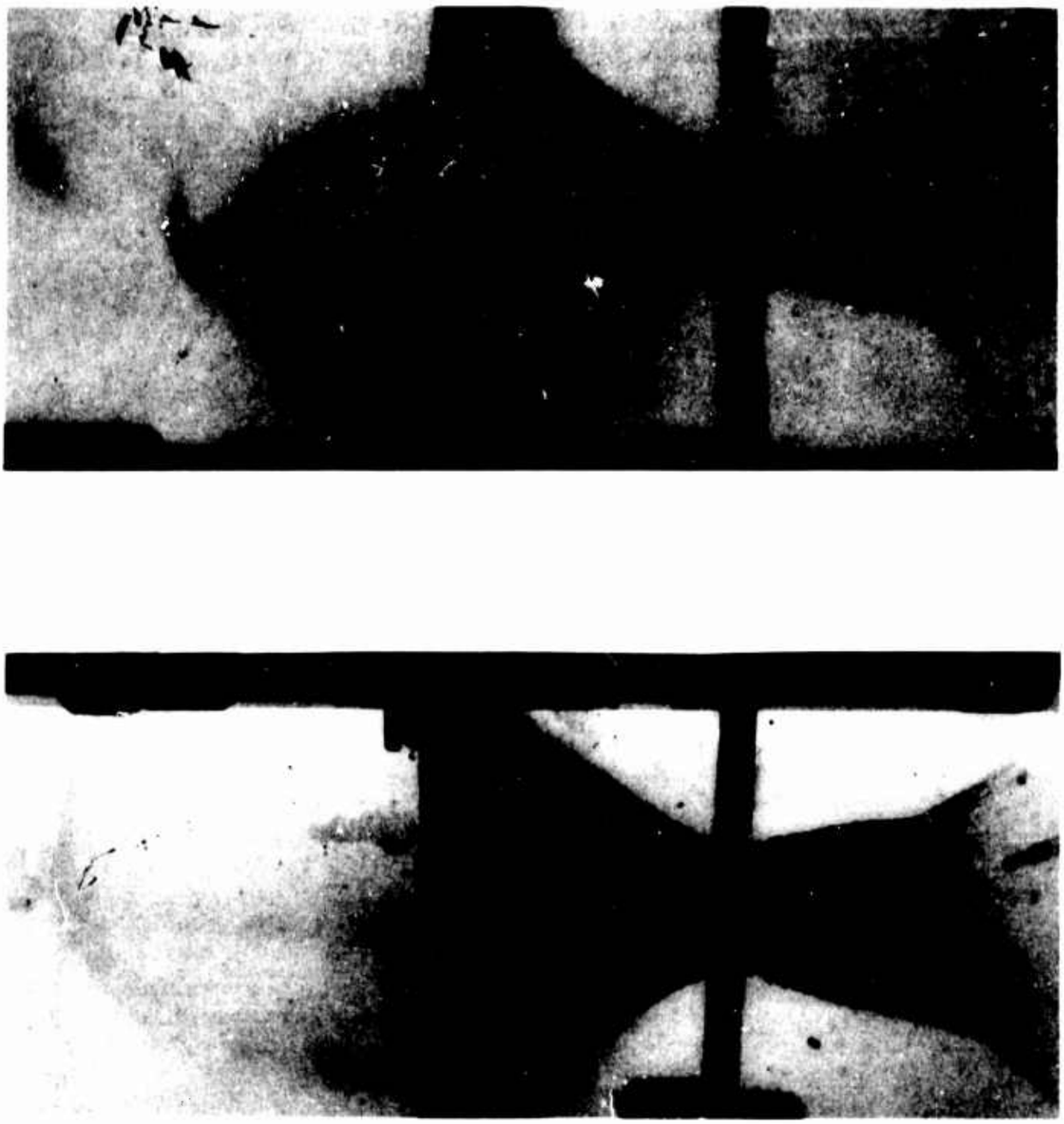

Figure 5. Round 2199 - 3.2 mm Cd projectile impacting 1.6 mm Cd plate at 6.71 km/sec. Flash x-rays are separated by 3.89 microseconds.

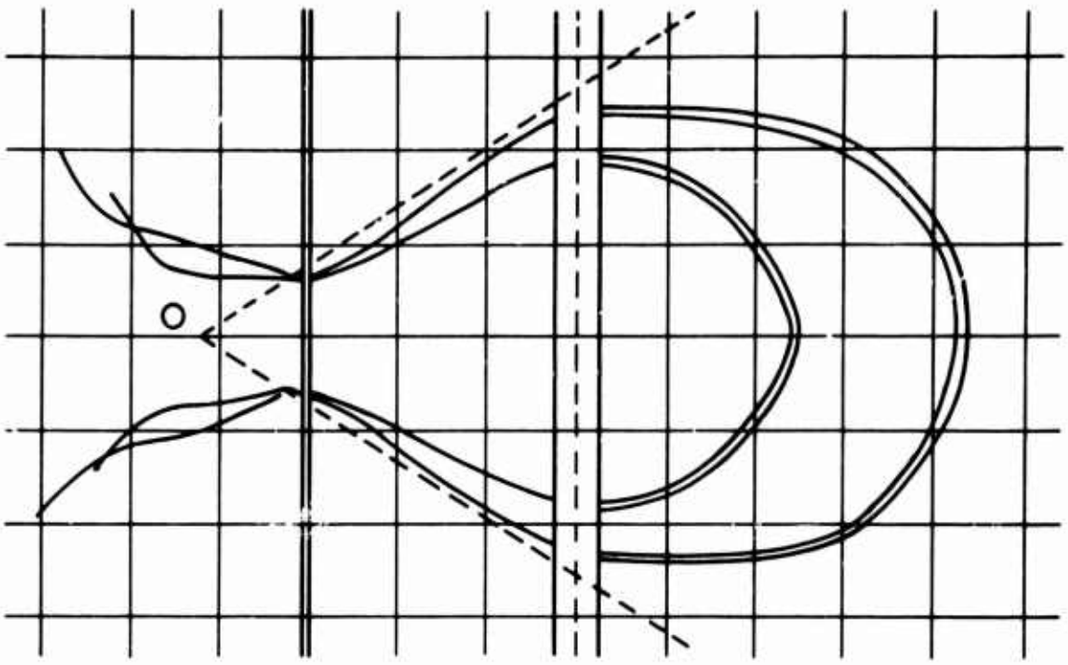

Figure 6. Round 2199 - geometrically corrected pattern of debris cloud.

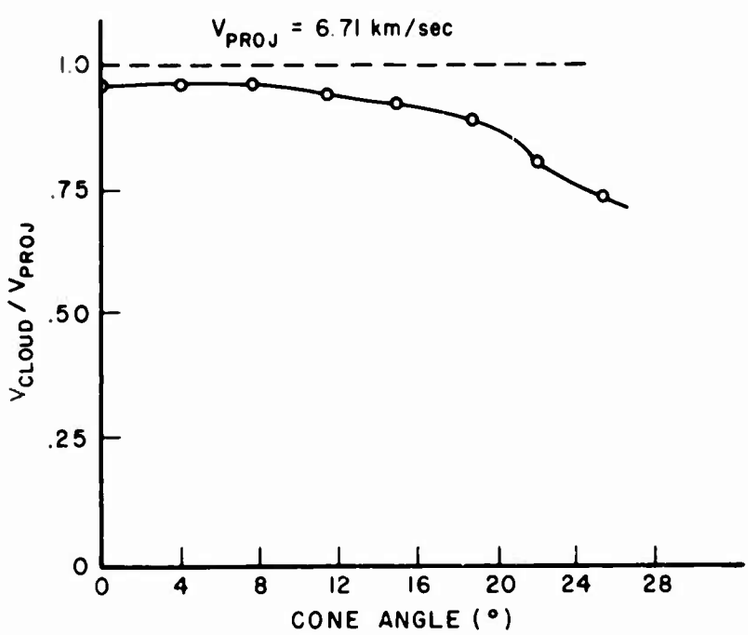

Figure 7. Round 2199 - cloud velocity vs. angle off axis based upon single "point of origin" technique.

Figure 8. Double Exposed X-ray Photograph of Flyer Plates in Flight. The Plates Were Launched by Impact With a Cadmium Debris Cloud.

measurements made with this setup included internal cloud impulse plus impulse resulting from cloud stagnation on the surface of the fixed plate. The currently available data from both of these experiments where cadmium on cadmium impacts were investigated is presented in Figure 9. Note that the impulse levels measured by the ballistic pendulum are in excess of those measured by the flyer plate experiments. The momentum multiplication due to cloud stagnation is, thus, greater than momentum multiplication due to the rebound of cloud and plate material.

C. Cloud Trajectory Study. Two rounds have been fired to study cloud trajectories generated by cadmium-on-cadmium impacts. In each case the bumper thickness was one-quarter of the projectile diameter since calculations indicated this configuration leads to near maximum vaporization of the pellet and plate material.

Each of the two experiments involved diagnostics of the spray cloud produced by the impact. A segmented "splitter plate" was placed downstream from the impact so that individual segments of the cloud could be analyzed after they passed the splitter plate. The expansion of the spray cloud was recorded using a Beckman and Whitley Model 300 high speed framing camera. Two 105 kv flash X-rays were planned for each cloud prior to impact with the splitter plate. The trigger signal for the diagnostic instrumentation was obtained from a foil switch placed on the front of the target. Figure 10 illustrates the experimental setup for these two rounds.

The x-ray tubes were each arranged 30° from the vertical; two x-ray film cassettes were placed perpendicular to the x-ray beams and appropriately shielded with lead plates so that each was exposed by only one x-ray tube. The off-axis placement of the tubes results in a geometric distortion in the X-rays that was eliminated during data reduction by comparing the skewed images with those from additional X-rays of an appropriately placed calibration grid.

The backlighting for the B&W 300 pictures was obtained from an air spark light source that was activated by the trigger signal from the foil switch. The light source was turned off at a predetermined time by a Kerr cell. Exact timing data on the X-rays and backlight source for the framing camera was to be obtained using the "Winker-Fastax" system described in Ref. 1.

The framing camera and x-ray pictures obtained are shown in Figures 11 and 12. The outlines of the spray clouds taken from the X-rays of round 2427 are corrected for geometrical distortion and shown in Figure 13.

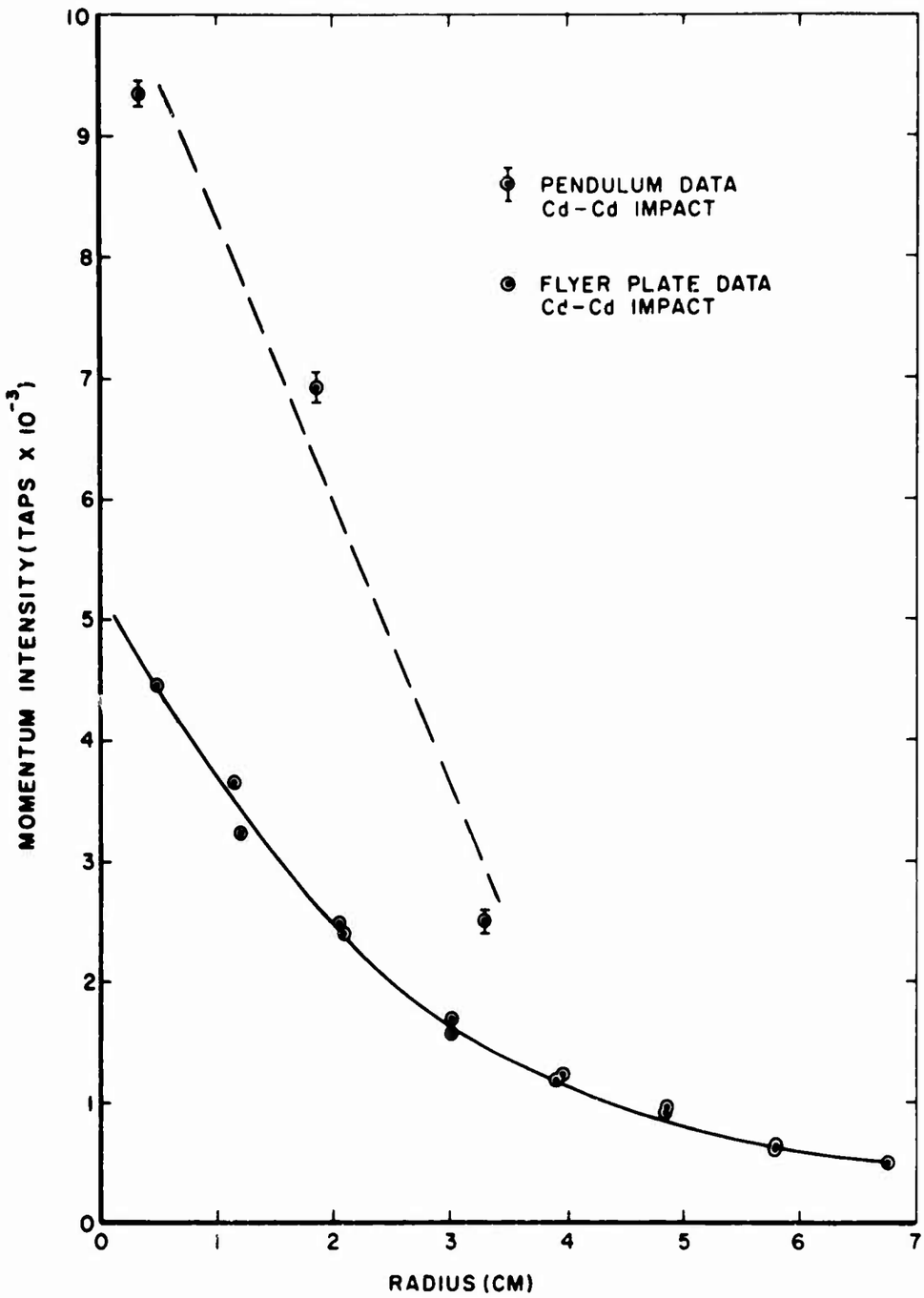

Figure 9. Momentum Intensity Distribution of a Debris Cloud Created by Impacting an 0.8 mm Cadmium Plate With a 3.2 mm Diameter Cadmium Sphere at 6.7 km/sec. Flyer plates and a ballistic pendulum measurement of cloud momentum across a plane 5.1 cm behind the impacted plate are presented.

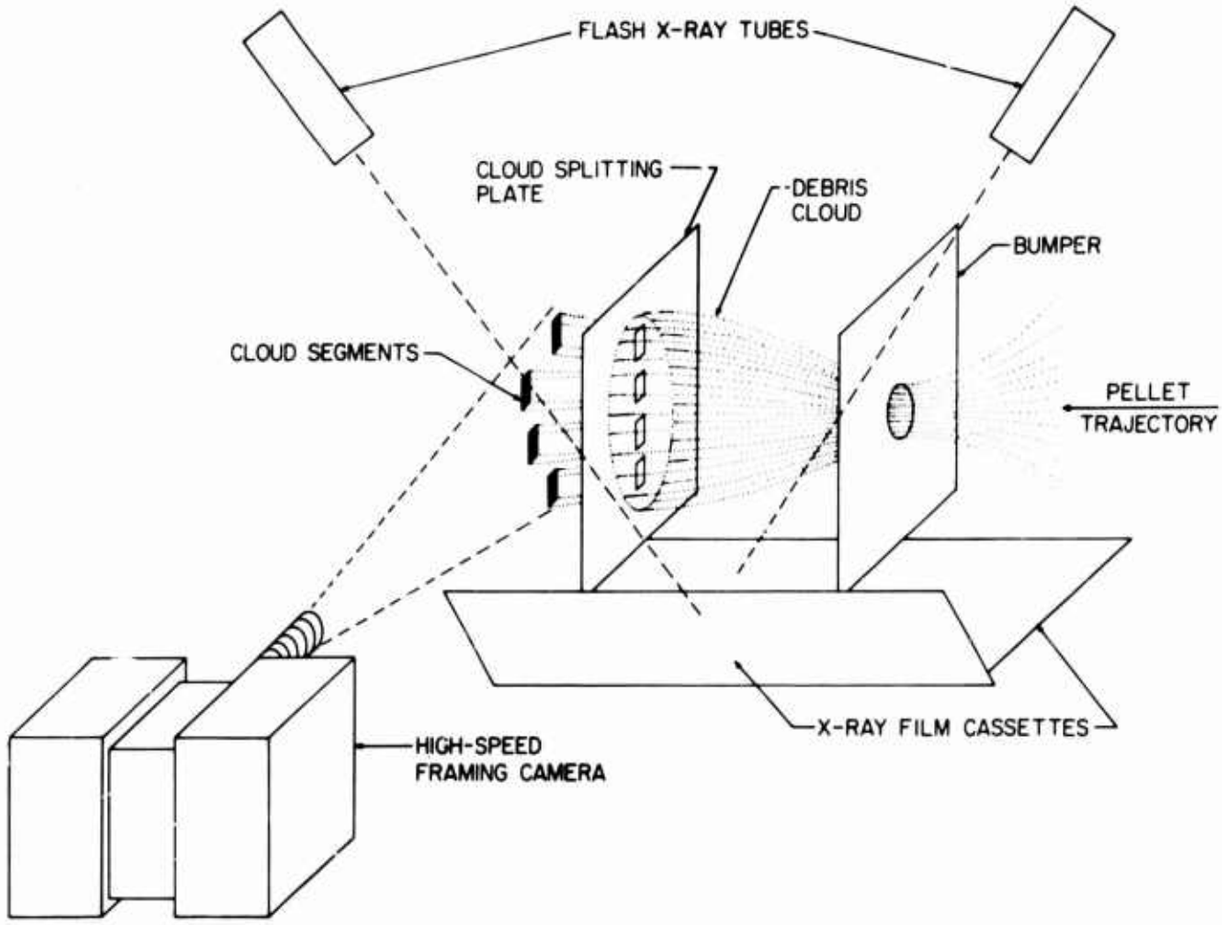

DATA OUTPUT

2 X-RAYS OF EXPANDING CLOUD BEFORE HITTING SPLITTING PLATE.

7 OPTICAL FRAMES OF EXPANDING CLOUD BEFORE HITTING SPLITTING PLATE.

11 OPTICAL FRAMES OF CLOUD SEGMENT MOTIONS.

RELATIVE TIMES OF ALL INFORMATION.

RESULTS

1. DEBRIS CLOUD DIMENSION VS. TIME PROFILE.
2. DIRECTION & VELOCITY OF CLOUD MATERIAL.
3. TIME & POINT OF DEPARTURE OF CLOUD MATERIAL.
4. MATERIAL DISTRIBUTION WITHIN CLOUD.

Figure 10. Instrument set-up for monitoring the component velocities of cadmium debris clouds.

Using the average interframe times of Table I for the B&W 300 camera, the velocity of the cloud was determined by measuring the position of the leading edge of the split cloud segments in several different photographs. The results of this data analysis are presented in Figure 14. An attempt to extrapolate these results back to an origin point for each particle group results in anomalous behavior which appears to be due to the drag created by the residual air pressure of 25 Torr used in each of these experiments. Additional experiments are planned to investigate this effect.

IV. IMPROVED CAPABILITIES

Since the rounds described were completed, several important features have been added to the hypervelocity range. They significantly improve the capability of performing debris dynamic studies. These new features include:

A. Vacuum System. The target tank may now be evacuated to pressures below 0.1 Torr. The target tank is separated from the remainder of the gun range by a 6.5 μ thick mylar diaphragm which the projectile penetrated without noticeable effect. This has been confirmed by photographs of the projectile in flight. In the near future, it will be possible to eliminate any diaphragm by using the thin plate itself as the seal between the target tank and remainder of the range. This will remove any possibility of distorting or destroying the projectile prior to impact with the desired target.

B. Trigger Switch. Instrumentation may now be reliably triggered by detecting the light flash at impact with a photomultiplier-amplifier combination. Foil switches on the face of the target are no longer required.

C. Segmenting Plate. One experiment performed with small separation between the holes in the debris segmenting plate indicates that this technique can be carried even further, perhaps to the extent of separating the segments by small diameter wires. The advantage of narrow partitions between segments is that more segments are available to follow in the pictures.

D. Preicision Timing. A reliable technique has been developed for obtaining measurements of the time between impact and electrical signals associated with the instrumentation. The technique uses an array of fiber optics to pipe the impact flash to the slit of a Dynafax streak camera. Xenon flash tubes (winkers) driven by fast thyratrons

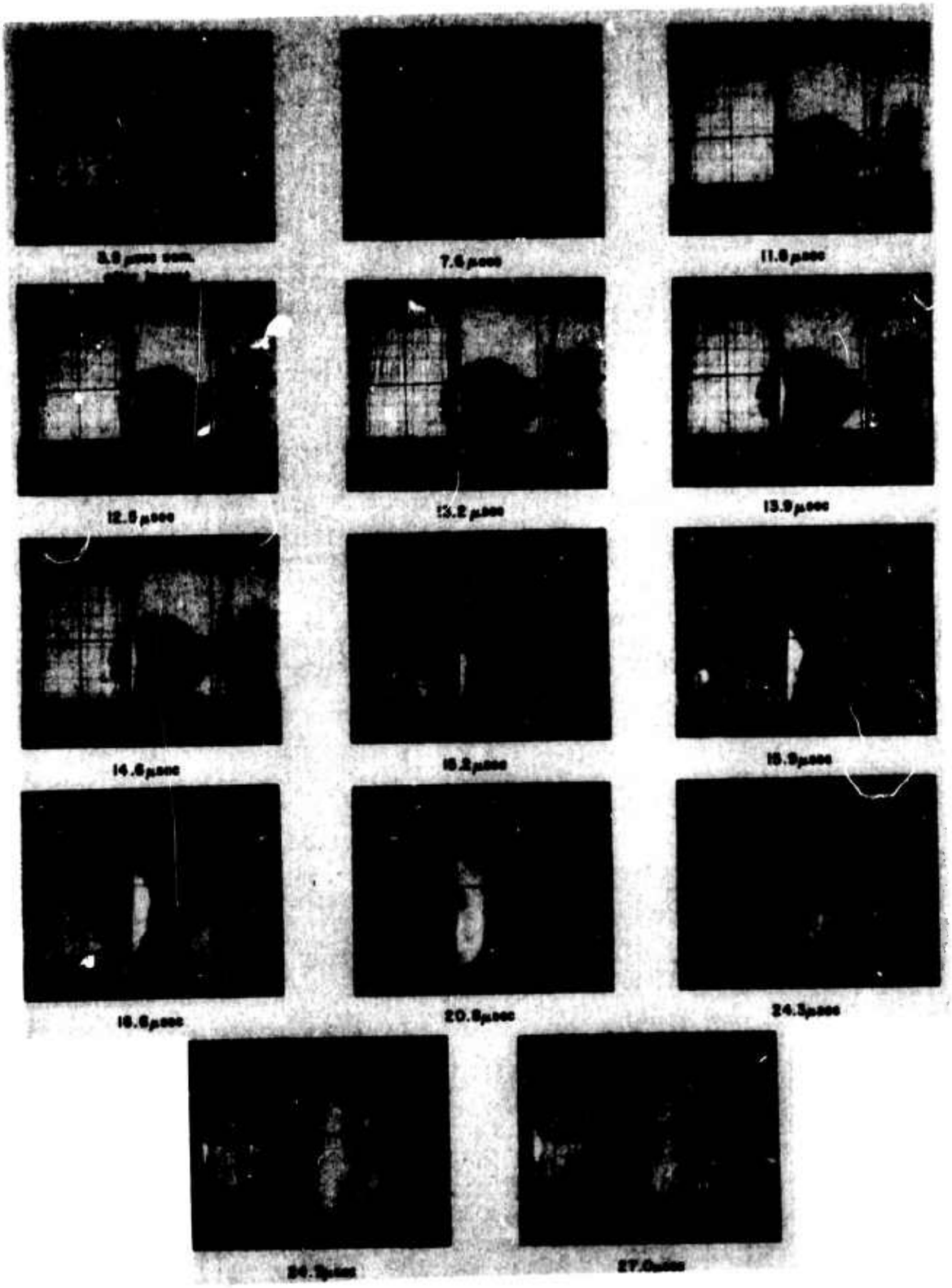

Figure 11. Selected B&W 300 camera frames illustrating expansion, action of splitter plate, and subsequent motion of a cadmium debris cloud.

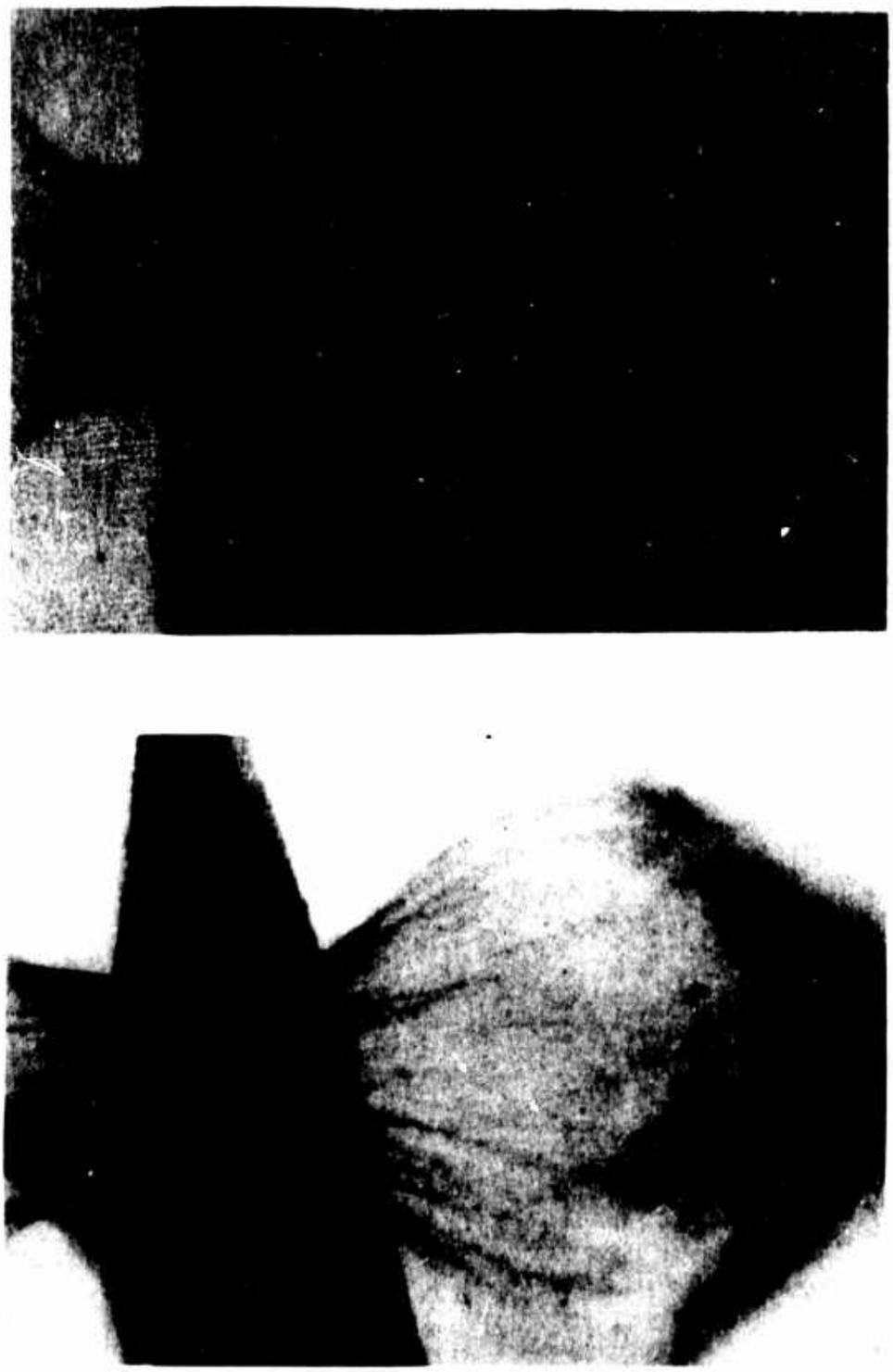

Figure 12. Flash x-ray of expanded cadmium debris clouds. The X-rays taken were 5.5 and 7.5 microseconds after impact.

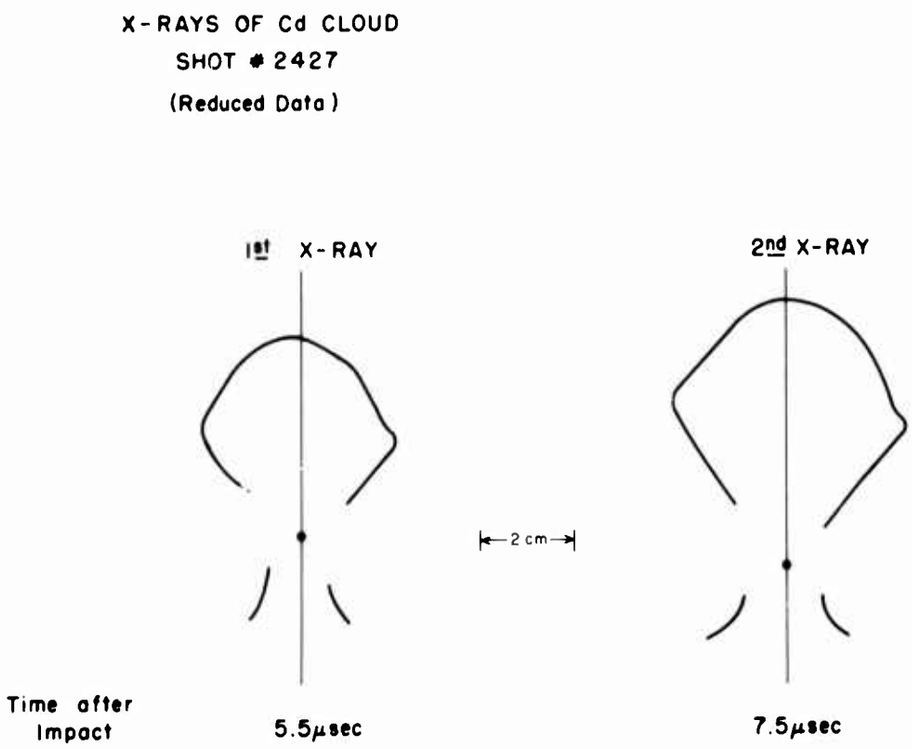

Figure 13. Round 2427 - outline of cadmium debris cloud from flash x-rays corrected for geometric distortion.

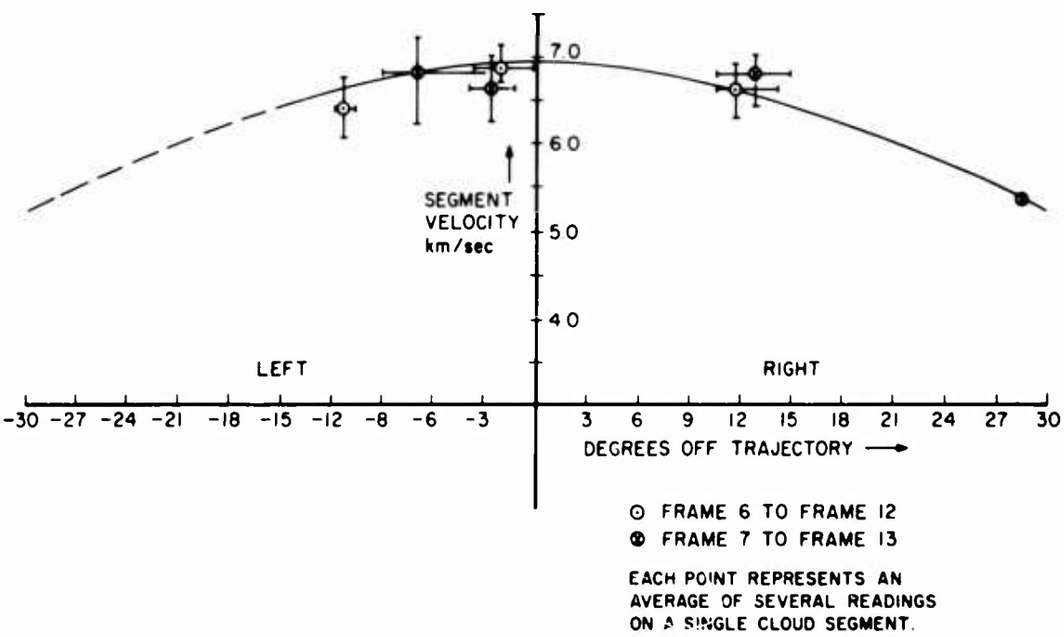

Figure 14. Round 2427 - cadmium debris velocity as function of angle off axis.

TABLE I

SUMMARY OF SEGMENTED CADMIUM CLOUD FIRINGS

Round	2426	2427
Velocity	6.88 km/sec	7.05 km/sec
Projectile Size	3.2 mm Cd Sphere 156.4 mg	3.2 mm Cd Sphere 153.5 mg
Bumper	.8 mm Cd Plate	.8 mm Cd Plate
Bumper to Splitter Distance	5.08 mm	7.62 mm
Splitter to Witness Plate Distance	7.62 mm	7.62 mm
300 Camera		
Turbine Speed	3587 rps	3343 rps
Avg. time between frames	.645 μ sec	.693 μ sec
X-rays, Time After Impact		
X-ray 1	2.4 μ sec†	5.5 μ sec†
X-ray 2	-*	7.5 μ sec†

* Only one X-ray obtained on this round.

† Fastax timing data not available, times calculated indirectly by comparison of X-rays with framing camera photos.

are used to produce optical signals corresponding to other events. These events are also recorded on the Fastax record for the round which serves to generate the time base for the Dynafax record. Times between events may be resolved to less than 50 nanoseconds.

E. Image Converter Cameras. A battery of three image converter cameras with exposure times of less than 10 nanoseconds each have been arranged so that all three cameras look along the same optical axis and use the same back lighting source. Times between pictures can be adjusted arbitrarily and can be measured by the technique of D above. This array has made possible accurate determination of the position-time histories of rapidly moving visible objects such as elements of debris clouds.

V. REFERENCES

1. Swift, H. F., "The Air Force Materials Laboratory Hypervelocity Ballistic Range", Report No. AFML-TR-67-2, January 1967.

2. Carey, Capt. D. A., "An Investigation of the Debris Cloud Produced by the Impact of Spheres on Thin Metal Sheets", AF Institute of Technology Master's Thesis No. GSF/Mech 67-1, June 1967.

Unclassified
Security Classification

DOCUMENT CONTROL DATA - R&D

(Security classification of title, body of abstract and indexing annotation must be entered when the overall report is classified)

1 ORIGINATING ACTIVITY *(Corporate author)* University of Dayton Research Institute Dayton, Ohio	2a REPORT SECURITY CLASSIFICATION Unclassified 2b GROUP

3 REPORT TITLE

Simulation of High Velocity Impacts on Thin Targets

4 DESCRIPTIVE NOTES *(Type of report and inclusive dates)*

Topical Progress Report

5 AUTHOR(S) *(Last name, first name, initial)*

Swift, H. F.
Prater, Capt. R. F.

6 REPORT DATE April 1968	7a TOTAL NO OF PAGES	7b NO. OF REFS 2

8a CONTRACT OR GRANT NO F33615-68-C-1138 b PROJECT NO 7360 c Task No. 736006 d	9a ORIGINATOR'S REPORT NUMBER(S) UDRI-TR-68-18 9b OTHER REPORT NO(S) *(Any other numbers that may be assigned this report)* AFML-TR-68-88

10 AVAILABILITY/LIMITATION NOTICES

This document has been approved for public release and sale; its distribution is unlimited.

11 SUPPLEMENTARY NOTES	12 SPONSORING MILITARY ACTIVITY Air Force Materials Laboratory Research and Technology Division Wright-Patterson AFB, Ohio 45433

13 ABSTRACT

Current interest in investigating impacts of thin structural plates by pellets traveling at velocities of 15 km/sec and above has prompted efforts to simulate the process under laboratory conditions. Pellet and plate debris vaporization that results from such impacts cannot be achieved in the laboratory. A partial laboratory simulation of these impacts can be achieved by substituting easily vaporized materials such as cadmium for the structural materials of direct interest. The AFML Impact Physics Group has developed a series of techniques for carrying out such simulations. Besides measurements of gross damage effects, the velocity, mass, and momentum distributions within the simulated debris clouds can be measured as functions of time after impact. A limited number of typical results for cadmium-on-cadmium impact are presented.

DD FORM 1 JAN 64 1473

Unclassified
Security Classification

Unclassified
Security Classification

14 KEY WORDS	LINK A ROLE	LINK A WT	LINK B ROLE	LINK B WT	LINK C ROLE	LINK C WT
Hypervelocity Impact Thin Target Dynamic Measurement Cadmium						

INSTRUCTIONS

1. ORIGINATING ACTIVITY: Enter the name and address of the contractor, subcontractor, grantee, Department of Defense activity or other organization *(corporate author)* issuing the report.

2a. REPORT SECURITY CLASSIFICATION: Enter the overall security classification of the report. Indicate whether "Restricted Data" is included. Marking is to be in accordance with appropriate security regulations.

2b. GROUP: Automatic downgrading is specified in DoD Directive 5200.10 and Armed Forces Industrial Manual. Enter the group number. Also, when applicable, show that optional markings have been used for Group 3 and Group 4 as authorized.

3. REPORT TITLE: Enter the complete report title in all capital letters. Titles in all cases should be unclassified. If a meaningful title cannot be selected without classification, show title classification in all capitals in parenthesis immediately following the title.

4. DESCRIPTIVE NOTES: If appropriate, enter the type of report, e.g., interim, progress, summary, annual, or final. Give the inclusive dates when a specific reporting period is covered.

5. AUTHOR(S): Enter the name(s) of author(s) as shown on or in the report. Enter last name, first name, middle initial. If military, show rank and branch of service. The name of the principal author is an absolute minimum requirement.

6. REPORT DATE: Enter the date of the report as day, month, year; or month, year. If more than one date appears on the report, use date of publication.

7a. TOTAL NUMBER OF PAGES: The total page count should follow normal pagination procedures, i.e., enter the number of pages containing information.

7b. NUMBER OF REFERENCES: Enter the total number of references cited in the report.

8a. CONTRACT OR GRANT NUMBER: If appropriate, enter the applicable number of the contract or grant under which the report was written.

8b, 8c, & 8d. PROJECT NUMBER: Enter the appropriate military department identification, such as project number, subproject number, system numbers, task number, etc.

9a. ORIGINATOR'S REPORT NUMBER(S): Enter the official report number by which the document will be identified and controlled by the originating activity. This number must be unique to this report.

9b. OTHER REPORT NUMBER(S): If the report has been assigned any other report numbers *(either by the originator or by the sponsor)*, also enter this number(s).

10. AVAILABILITY/LIMITATION NOTICES: Enter any limitations on further dissemination of the report, other than those imposed by security classification, using standard statements such as:

(1) "Qualified requesters may obtain copies of this report from DDC."

(2) "Foreign announcement and dissemination of this report by DDC is not authorized."

(3) "U. S. Government agencies may obtain copies of this report directly from DDC. Other qualified DDC users shall request through
_____."

(4) "U. S. military agencies may obtain copies of this report directly from DDC. Other qualified users shall request through
_____."

(5) "All distribution of this report is controlled. Qualified DDC users shall request through
_____."

If the report has been furnished to the Office of Technical Services, Department of Commerce, for sale to the public, indicate this fact and enter the price, if known.

11. SUPPLEMENTARY NOTES: Use for additional explanatory notes.

12. SPONSORING MILITARY ACTIVITY: Enter the name of the departmental project office or laboratory sponsoring *(paying for)* the research and development. Include address.

13. ABSTRACT: Enter an abstract giving a brief and factual summary of the document indicative of the report, even though it may also appear elsewhere in the body of the technical report. If additional space is required, a continuation sheet shall be attached.

It is highly desirable that the abstract of classified reports be unclassified. Each paragraph of the abstract shall end with an indication of the military security classification of the information in the paragraph, represented as *(TS)*, *(S)*, *(C)*, or *(U)*.

There is no limitation on the length of the abstract. However, the suggested length is from 150 to 225 words.

14. KEY WORDS: Key words are technically meaningful terms or short phrases that characterize a report and may be used as index entries for cataloging the report. Key words must be selected so that no security classification is required. Identifiers, such as equipment model designation, trade name, military project code name, geographic location, may be used as key words but will be followed by an indication of technical context. The assignment of links, rules, and weights is optional.

Unclassified
Security Classification