AD670085

THE UNIVERSITY OF MICHIGAN

Memorandum 16

CONCOMP

April 1968

PDP-8 TO 103A DATAPHONE AND/OR ONLINE TELETYPE INTERFACE

K. E. Burkhalter, Jr.

JUN 10 1968

Reproduced by the
CLEARINGHOUSE
for Federal Scientific & Technical
Information Springfield Va. 22151

23

THE UNIVERSITY OF MICHIGAN

Memorandum 16

PDP-8 TO 103A DATAPHONE AND/OR ONLINE TELETYPE INTERFACE

K.E. Burkhalter, Jr.

CONCOMP: Research in Conversational Use of Computers
F.H. Westervelt, Project Director
ORA Project 07449

Supported by:

ADVANCED RESEARCH PROJECTS AGENCY
DEPARTMENT OF DEFENSE
WASHINGTON, D.C.

CONTRACT NO. DA-49-083 OSA-3050
ARPA ORDER NO. 716

administered through:

OFFICE OF RESEARCH ADMINISTRATION ANN ARBOR

April 1968

BLANK PAGE

PDP-8 TO 103A DATAPHONE AND/OR ONLINE
TELETYPE INTERFACE

K.E. Burkhalter, Jr.

Further Notes on PDP-8/103A Interface*

This report supersedes two previous reports on this subject, and reflects changes incorporated to improve performance (that is, level converters have been added between the PDP-8 TTY lines, and the following logic). The accompanying diagrams illustrate an interface between AT&T 103A data sets and a standard PDP-8 processor and its associated online teletype (TTY). The interfaces provide:

a. connection of the DEC online TTY to the dial switch network;

b. connection of the DEC online TTY to the PDP-8;

c. connection of the PDP-8 to the dial switch network.

Figure 1 illustrates the possible modes of operation.

---

* See also, Mills, D.L., Notes on PDP-8/103A Interfaces, Concomp Project internal memorandum, 25 September 1966; and Lundstrom, Stephen F., PDP-8/103A Dataphone Interface, Concomp Memorandum, November 1966.

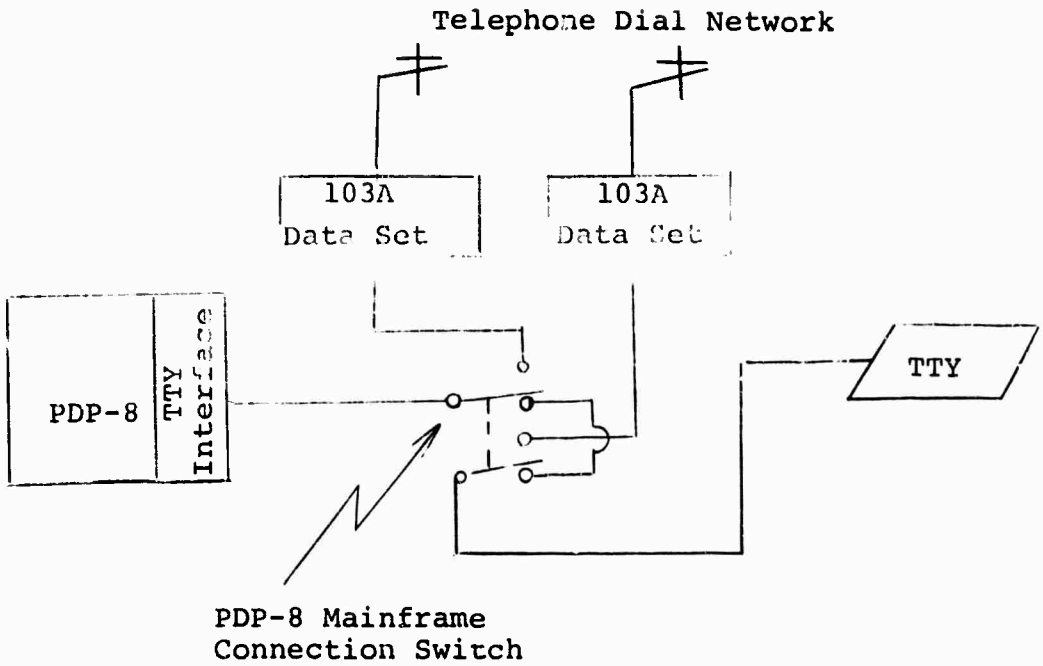

Figure 1

The interface takes care of interlocking the various features so that chaos can not reign supreme. Thus, the TTY can be used with its data set only if it is not attached to the 8. When the TTY is switched to the PDP-8, terminal ready drops on the TTY data set, disconnecting it from further use, so that contention is not a problem. The reader advance solenoid of the TTY is also brought TRUE at this time, so that the reader may be used with the data set by throwing the reader advance switch, on the reader, on and off. This is necessary since the data set does not have an extra channel available to control the reader, as is the case with the local processor. Note that the terminal ready lead of the

mainfraim data set is brought out to a switch so that it may be dropped if necessary to initiate a disconnect (a feature that has often been found handy).

The PDP-8 may be switched back and forth between the two I/O devices (TTY, mainframe data set). If, however, either is actively engaged in data transmission, a few garbled characters will result. The interface forces a MARK condition on the unused port so that it will not chatter for the case of the TTY, or space disconnect for the data set. Also, since the switchover is done rapidly and while in MARK states (assuming no transmission) there is no SPACE transition and thus no "burping" of the teletype.

The state of the PDP-8 keyboard input and printer output lines is indicated on a lamp panel attached to the logic mounting bays. The lamps light for the SPACE rather than for the MARK state, thus allowing the lights to be normally off. The terminal ready lines of both data sets are also monitored via a front panel lamp each. In addition, as noted before, the terminal ready line for the mainframe data set is brought out to a front panel switch, which will normally be left in the on position.

One special board is required for the interface, to restore standard logic levels, since the PDP-8 TTY interface is designed to interface with solenoids rather than with logic gates. The solenoid driver used within the computer is the W050 which produces an output between -2 (on) and

-15 (off) volts. To restore these to ground and about -3 volts, a three-diode string (3-IN457As) is added at the printer and reader output leads. The extra IN270 diode on this board is used to pull the mainframe data set transmit lead to the MARK state when the PDP-8 is connected to the TTY.

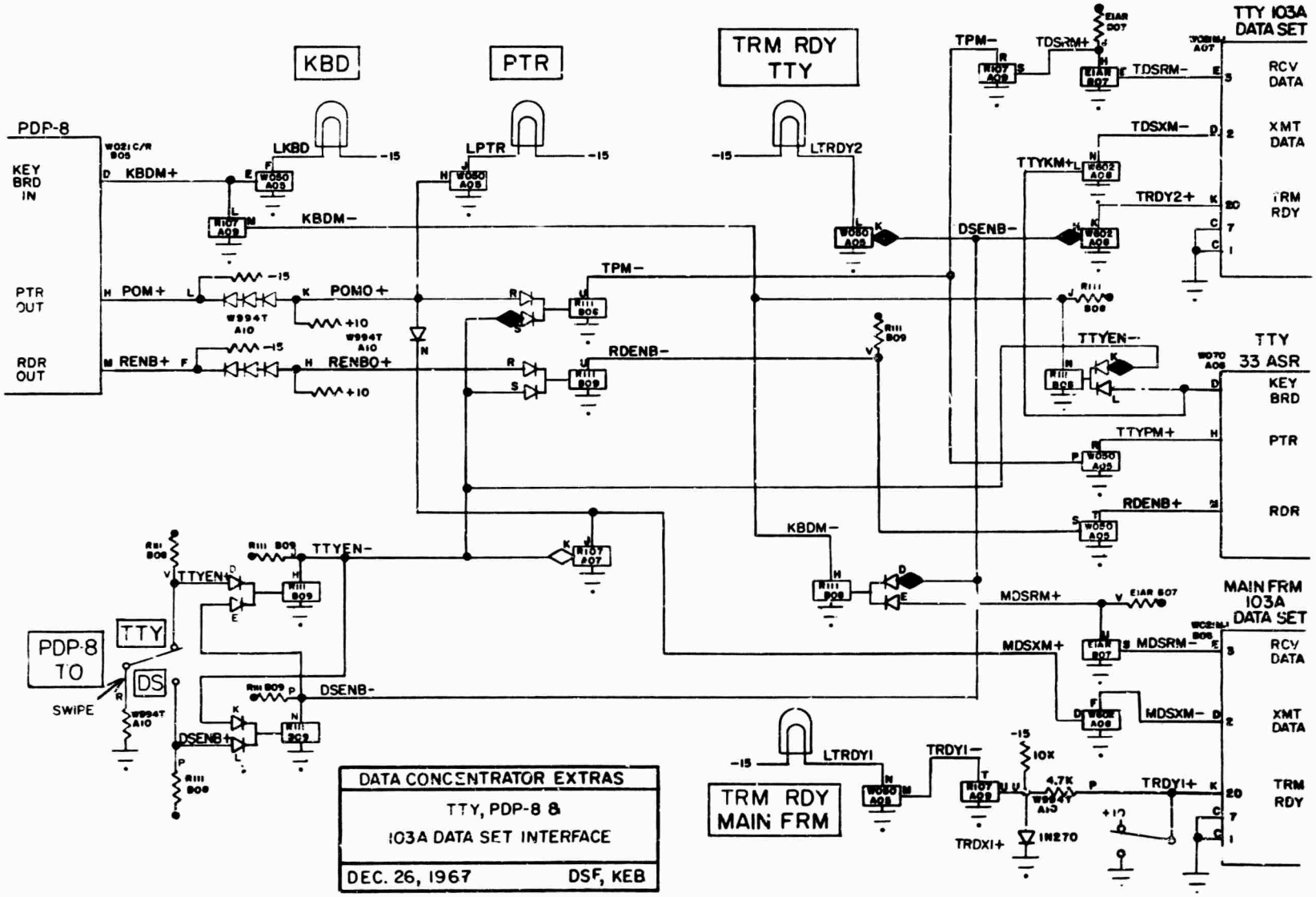
PDP-8
KEY BRD IN
PTR OUT
RDR OUT
KBD
PTR
TRM RDY TTY
TRM RDY MAIN FRM
LKBD
LPTR
LTRDY2
LTRDYI
KBDM+
KBDM−
POM+
POMO+
RENB+
RENBO+
TPM−
RDENB−
DSENB−
TTYEN−
TTYEN+
DSENB+
TDSRM+
TDSRM−
TDSXM−
TTYKM+
TRDY2+
TTYPM+
RDENB+
MDSRM+
MDSRM−
MDSXM+
MDSXM−
TRDYI−
TRDYI+
TRDXI+
TTY 103A DATA SET
RCV DATA
XMT DATA
TRM RDY
TTY 33 ASR
KEY BRD
PTR
RDR
MAIN FRM 103A DATA SET
PDP-8 TO
SWIPE
TTY
DS
DATA CONCENTRATOR EXTRAS
TTY, PDP-8 & 103A DATA SET INTERFACE
DEC. 26, 1967
DSF, KEB

APPENDIX

APPENDIX

Wire wrap documentation is reproduced on the following pages as a servicing aid to those responsible for that function in the future.

WIRE WRAP (VERSION 27 JUNE)

INPUT LISTS

1A05	W050	DSENB-K	LTRDY2L	TRDY1-M	LTRDY1N	TPM-P	TTYPM+R	RDENB-S
1A05	W050	KBDM+E	LKBDF	POMO+H	LPTRJ	RDENB+T		
1A06	W070	TTYKM+D	TTYPM+H	RDENB+M				
1A07	W021MJ	TDSXM-D	TDSRM-E	TRDY2+K				
1A08	W602	MDSXM+D	MDSXM-F	DSENB-H	TRDY2+K	TTYKM+L	TDSXM-N	
1A08	W602	TMDS+P	TMDS-R	TMDS+S	TMDS-V			
1A09	R107	TTYEN-K	MDSXM+J	KBDM-M	KBDM+L	TDSRM+S	TPM-R	
1A09	R107	TRDX1+U	TRDY1-T					
1A10	W994T	RENB+F	RENBO+H	POMO+K	POM+L	MDSXM+N	TRDY1+P	
1A10	W994T	SWIPER	TRDX1+U					
1B05	W021RC	KBDM+J	POM+H	RENB+M				
1B06	W021M	MDSXM-D	MDSRM-E	TRDY1+K	STD10+A	STDGNDC		
1B07	EIAR	GTDSR-D	GTDSR-C	TDSRM-E	TDSRM+J	TDSRM+H	GTDSR-R	
1B07	EIAR	MDSRM-S	MDSRM+V	MDSRM+U				
1B08	R111	DSENB+P	KBDM-N	POMO+R	TTYEN-S	TTYEN+V	TPM-U	
1B08	R111	DSENB-D	MDSRM+E	KBDM-J	KBDM-H	TTYEN-K	TTYKM+L	
1B09	R111	TTYEN+D	DSENB-E	TTYEN-J	TTYEN-H	TTYEN-K	DSENB+L	
1B09	R111	DSENB-P	DSENB-N	RENBO+R	TTYEN-S	RDENB-V	RDENB-U	

***** PDP-8 TO TTY/103A ADAPTER *****

CONCATONATED CIRCUIT LISTS

DSENB+	1B09L,1B08P
DSENB-	1A05K,1A08H,1B08D,1B09E,1B09N,1B09P
GTDSR-	1B07C,1B07D,1B07R
KBDM+	1B05D,1A05E,1A09L
KBDM-	1A09M,1B08H,1B08J,1B08N
LKBD	1A05F
LPTR	1A05J
LTRDY1	1A05N
LTRDY2	1A05L
MDSRM+	1B08E,1B07U,1B07V
MDSRM-	1B06E,1B07S
MDSXM+	1A08D,1A09J,1A10N
MDSXM-	1A08F,1B06D
POM+	1A10L,1B05H
POMO+	1A05H,1A10K,1B08R
RDENB+	1A06M,1A05T
RDENB-	1A05S,1B09U,1B09V
RENB+	1A10F,1B05M
RENBO+	1A10H,1B09R
STD10+	1B06A
STDGND	1B06C
SWIPE	1A10R
TDSRM+	1A09S,1B07H,1B07J
TDSRM-	1A07E,1B07E
TDSXM-	1A07D,1A08N
TMDS+	1A08P,1A08S
TMDS-	1A08R,1A08V
TPM-	1A05P,1A09R,1B08U
TRDX1+	1A09U,1A10U
TRDY1+	1A10P,1B06K
TRDY1-	1A05M,1A09T
TRDY2+	1A07K,1A08K
TTYEN+	1B09D,1B08V
TTYEN-	1B09S,1B08S,1B08K,1B09K,1B09H,1B09J,1A09K
TTYKM+	1A06D,1A08L,1B08L
TTYPM+	1A06H,1A05R

***** PDP-8 TO TTY/103A ADAPTER *****

CROSS-REFERENCE TABLES (****DENOTES LOCATION OF PIN BEING REFEREN

1A05E	KBDM+	1B05D,*****,1A09L
1A05F	LKBD	*****
1A05H	POMO+	*****,1A10K,1B08R
1A05J	LPTR	*****
1A05K	DSENB-	*****,1A08H,1B08D,1B09E,1B09N,1B09P
1A05L	LTRDY2	*****
1A05M	TRDY1-	*****,1A09T
1A05N	LTRDY1	*****
1A05P	TPM-	*****,1A09R,1B08U
1A05R	TTYPM+	1A06H,*****
1A05S	RDENB-	*****,1B09U,1B09V
1A05T	RDENB+	1A06M,*****
1A06D	TTYKM-	*****,1A06L,1B08L
1A06H	TTYPM+	*****,1A05R
1A06M	RDENB+	*****,1A05T
1A07D	TDSXM-	*****,1A08N
1A07E	TDSRM-	*****,1B07E
1A07K	TRDY2+	*****,1A08K
1A08D	MDSXM+	*****,1A09J,1A10N
1A08F	MDSXM-	*****,1B06D
1A08H	DSENB-	1A05K,*****,1B08D,1B09F,1B09N,1B09P
1A08K	TRDY2+	1A07K,*****
1A08L	TTYKM+	1A06D,*****,1B09L
1A08N	TDSXM-	1A07D,*****
1A08P	TMDS+	*****,1A08S
1A08R	TMDS-	*****,1A08V
1A08S	TMDS+	1A08P,*****
1A08V	TMDS-	1A08R,*****
1A09J	MDSXM+	1A08D,*****,1A10N
1A09K	TTYEN-	1B09S,1B09S,1B08K,1B09K,1B09H,1B09J,*****
1A09L	KBDM+	1B05D,1A05E,*****
1A09M	KBDM-	*****,1B09H,1B08J,1B09N
1A09R	TPM-	1A05P,*****,1B08U
1A09S	TDSRM+	*****,1B07H,1B07J
1A09T	TRDY1-	1A05M,*****
1A09U	TRDX1+	*****,1A10U
1A10F	RENB+	*****,1B05M
1A10H	RENBO+	*****,1B09R
1A10K	POMO+	1A05H,*****,1B08R
1A10L	POM+	*****,1B05H
1A10N	MDSXM+	1A08D,1A09J,*****
1A10P	TRDY1+	*****,1B06K
1A10R	SWIPE	*****
1A10U	TRDX1+	1A09U,*****
1B05D	KBDM+	*****,1A05E,1A09L
1B05H	POM+	1A10L,*****
1B05M	RENB+	1A10F,*****
1B06A	STD10+	*****
1B06C	STDGND	*****
1B06D	MDSXM-	1A08F,*****
1B06E	MDSRM-	*****,1B07S
1B06K	TRDY1+	1A10P,*****
1B07C	GTDSR-	*****,1B07D,1B07R
1B07D	GTDSR-	1B07C,*****,1B07R

***** PDP-8 TO TTY/103A ADAPTER *****

1B07E	TDSRM-	1A07E,*****
1B07H	TDSRM+	1A09S,*****,1B07J
1B07J	TDSRM+	1A09S,1B07H,*****
1B07R	GTDSR-	1B07C,1B07D,*****
1B07S	MDSRM-	1B06E,*****
1B07U	MDSRM+	1B08E,*****,1B07V
1B07V	MDSRM+	1B08E,1B07U,*****
1B08D	DSENB-	1A05K,1A08H,*****,1B09E,1B09N,1B09P
1B08E	MDSRM+	*****,1B07U,1B07V
1B08H	KBDM-	1A09M,*****,1B08J,1B08N
1B08J	KBDM-	1A09M,1B08H,*****,1B08N
1B08K	TTYEN-	1B09S,1B08S,*****,1B09K,1B09H,1B09J,1A09K
1B08L	TTYKM+	1A06D,1A08L,*****
1B08N	KBDM-	1A09M,1B08H,1B08J,*****
1B08P	DSENB+	1B09L,*****
1B08R	POMD+	1A05H,1A10K,*****
1B08S	TTYEN-	1B09S,*****,1B08K,1B09K,1B09H,1B09J,1A09K
1B08U	TPM-	1A05P,1A09R,*****
1B08V	TTYEN+	1B09D,*****
1B09D	TTYEN+	*****,1B08V
1B09E	DSENB-	1A05K,1A08H,1B08D,*****,1B09N,1B09P
1B09H	TTYEN-	1B09S,1B08S,1B08K,1B09K,*****,1B09J,1A09K
1B09J	TTYEN-	1B09S,1B08S,1B08K,1B09K,1B09H,*****,1A09K
1B09K	TTYEN-	1B09S,1B08S,1B08K,*****,1B09H,1B09J,1A09K
1B09L	DSENB+	*****,1B08P
1B09N	DSENB-	1A05K,1A08H,1B08D,1B09E,*****,1B09P
1B09P	DSENB-	1A05K,1A08H,1B08D,1B09E,1B09N,*****
1B09R	RENBD+	1A10H,*****
1B09S	TTYEN-	*****,1B08S,1B08K,1B09K,1B09H,1B09J,1A09K
1B09U	RDENB-	1A05S,*****,1B09V
1B09V	RDENB-	1A05S,1B09U,*****

***** PDP-8 TO TTY/103A ADAPTER *****

OUTPUT LISTS

LKBD	1A05F	SINGLE I/O OR TEST CONNECTION
LPTR	1A05J	SINGLE I/O OR TEST CONNECTION
LTRDY1	1A05N	SINGLE I/O OR TEST CONNECTION
LTRDY2	1A05L	SINGLE I/O OR TEST CONNECTION
STD10+	1B06A	SINGLE I/O OR TEST CONNECTION
STDGND	1B06C	SINGLE I/O OR TEST CONNECTION
SWIPE	1A10R	SINGLE I/O OR TEST CONNECTION

***** PDP-8 TO TTY/103A ADAPTER *****

BAY 1 TO BAY 1, LEVEL 1

TMDS+	1	001	1A 08P	1A 08S
GTDSR-	1	001	1B 07C	1B 07D
DSENB-	1	001	1B 08D	1B 09E
TTYEN-	1	001	1B 09H	1B 09J
DSENB-	1	001	1B 09N	1B 09P
TRDY2+	1	002	1A 07K	1A 08R
TMDS-	1	002	1A 08R	1A 08V
TRDX1+	1	002	1A 09U	1A 10U
KBDM-	1	002	1B 08J	1B 08N
TTYEN-	1	002	1B 08K	1B 09K
TTYEN-	1	002	1B 08S	1B 09S
MDSXM+	1	003	1A 08D	1A 09J
RDENB+	1	003	1A 06M	1A 05T
DSENB+	1	003	1B 09L	1B 08P
TTYPM+	1	004	1A 06H	1A 05R
TTYKM+	1	005	1A 06D	1A 08L
TDSXM-	1	005	1A 07D	1A 08N
DSENB-	1	006	1A 08H	1A 05K
MDSRM-	1	006	1B 06E	1B 07S
MDSRM+	1	007	1B 08E	1B 07U
TTYEN+	1	008	1B 09D	1B 08V
TRDY1-	1	009	1A 05M	1A 09T
TPM-	1	009	1A 05P	1A 09R
TDSRM+	1	009	1A 09S	1B 07H
POMO+	1	010	1A 05H	1A 10K
KBDM-	1	010	1A 09M	1B 08H
KBDM+	1	011	1A 05E	1B 05D
TDSRM-	1	011	1A 07E	1B 07E
MDSXM-	1	012	1A 08F	1B 06D
TRDY1+	1	013	1A 10P	1B 06K
RENBO+	1	015	1A 10H	1B 09R
POM+	1	015	1A 10L	1B 05H
RDENB-	1	016	1A 05S	1B 09U
RENB+	1	019	1A 10F	1B 05M

***** PDP-8 TO TTY/103A ADAPTER *****

BAY 1 TO BAY 1, LEVEL 2

TDSRM+	2	001	1B 07H	1B 07J
KBDM-	2	001	1B 08H	1B 08J
TTYEN-	2	001	1B 09H	1B 09K
MDSRM+	2	001	1B 07U	1B 07V
RDENB-	2	001	1B 09U	1B 09V
MDSXM+	2	003	1A 09J	1A 10N
TTYEN-	2	003	1B 08K	1B 08S
DSENB-	2	004	1B 09E	1B 09N
GTDSR-	2	005	1B 07D	1B 07R
KBDM+	2	009	1A 05E	1A 09L
DSENB-	2	010	1A 08H	1B 08D
TTYEN-	2	011	1A 09K	1B 09J
TTYKM+	2	011	1A 08L	1B 08L
TPM-	2	014	1A 09R	1B 08U
POMO+	2	015	1A 10K	1B 08R

49 WIRES @.10 $4.90, @.15 $7.35

CARDS PUNCHED 0

NUMBER OF BUSS STRIPS 0

NUMBER OF WRAPS 49

TOTAL LENGTH OF WIRE 19

MODULE INVENTORY...PANEL 1		COST
EIAR	1	17.00
R107	1	24.00
R111	2	28.00
W021MJ	1	4.50
W050	1	13.00
W602	1	40.00
COST OF MODULES FOR THIS PANEL...		$ 126.50

PANEL 1 ... ***** PDP-8 TO TTY/103A ADAPTER *****

	A01	A02	A03	A04	A05	A06	A07	A08	A09	A10	A11
					W050	W070	W021MJ	W602	R107	W994T	
A											
B											
C											
D											
E						TTYKM+	TDSXM-	MDSXM+			
F					KBDM+		TDSRM-				
H					LKBD			MDSXM-		RENB+	
J					POMO+	TTYPM+		DSENB-		RENBO+	
K					LPTR				MDSXM+		
					DSENB-		TRDY2+	TRDY2+	TTYEN-	POMO+	
L					LTRDY2			TTYKM+	KBDM+	POM+	
M					TRDY1-	RDENB+			KBDM-		
N					LTRDY1			TDSXM-		MDSXM+	
P					TPM-			TMDS+		TRDY1+	
R					TTYPM+			TMDS-	TPM-	SWIPE	
S					RDENB-			TMDS+	TDSRM+		
T					RDENB+				TRDY1-		
U									TRDX1+	TRDX1+	
V								TMDS-			

	B01	B02	B03	B04	B05	B06	B07	B08	B09	B10	B11
					W021RC	W021M	EIAR	R111	R111		
A						STD10+					
B											
C						STDGND	GTDSR-				
D					KBDM+	MDSXM-	GTDSR-	DSENB-	TTYEN+		
E						MDSRM-	TDSRM-	MDSRM+	DSENB-		
F					POM+		TDSRM+	KBDM-	TTYEN-		
H							TDSRM+	KBDM-	TTYEN-		
J						TRDY1+		TTYEN-	TTYEN-		
K								TTYKM+	DSENB+		
L					RENB+						
M								KBDM-	DSENB-		
N								DSENB+	DSENB-		
P							GTDSR-	POMO+	RENBO+		
R							MDSRM-	TTYEN-	TTYEN-		
S											
T							MDSRM+	TPM-	RDENB-		
U							MDSRM+	TTYEN+	RDENB-		
V											

'/103A ADAPTER *****

A07	A08	A09	A10	A11	A12	A13	A14	A15	A16	
W021MJ	W602	R107	W994T							
										A
										B
										C
TDSXM-	MDSXM+									D
TDSRM-										E
	MDSXM-		RENB+							F
	DSENB-		RENBO+							H
		MDSXM+								J
TRDY2+	TRDY2+	TTYEN-	POMO+							K
	TTYKM+	KBDM+	POM+							L
		KBDM-								M
	TDSXM-		MDSXM+							N
	TMDS+		TRDY1+							P
	TMDS-	TPM-	SWIPE							R
	TMDS+	TDSRM+								S
		TRDY1-								T
		TRDX1+	TRDX1+							U
	TMDS-									V

B07	B08	B09	B10	B11	B12	B13	B14	B15	B16	
EIAR	R111	R111								
										A
										B
GTDSR-										C
GTDSR-	DSENB-	TTYEN+								D
TDSRM-	MDSRM+	DSENB-								E
										F
TDSRM+	KBDM-	TTYEN-								H
TDSRM+	KBDM-	TTYEN-								J
	TTYEN-	TTYEN-								K
	TTYKM+	DSENB+								L
										M
	KBDM-	DSENB-								N
	DSENB+	DSENB-								P
GTDSR-	POMO+	RENBO+								R
MDSRM-	TTYEN-	TTYEN-								S
										T
MDSRM+	TPM-	RDENB-								U
MDSRM+	TTYEN+	RDENB-								V

PANEL 1 ... ***** PDP-8 TO TTY/103A ADAPTER *****

	A17	A18	A19	A20	A21	A22	A23	A24	A25	A26
A										
B										
C										
D										
E										
F										
H										
J										
K										
L										
M										
N										
P										
R										
S										
T										
U										
V										

	B17	B18	B19	B20	B21	B22	B23	B24	B25	B26
A										
B										
C										
D										
E										
F										
H										
J										
K										
L										
M										
N										
P										
R										
S										
T										
U										
V										

A

PTER *****

24	A25	A26	A27	A28	A29	A30	A31	A32

A
B
C
D
F
F
H
J
K
L
M
N
P
R
S
T
U
V

24	B25	B26	B27	B28	B29	B30	B31	B32

A
B
C
D
E
F
H
J
K
L
M
N
P
R
S
T
U
V

Unclassified
Security Classification

DOCUMENT CONTROL DATA - R&D

(Security classification of title, body of abstract and indexing annotation must be entered when the overall report is classified)

1. ORIGINATING ACTIVITY (Corporate author)
THE UNIVERSITY OF MICHIGAN
CONCOMP PROJECT

2a. REPORT SECURITY CLASSIFICATION
Unclassified

2b. GROUP

3. REPORT TITLE
PDP-8 TO 103A DATAPHONE AND/OR ONLINE TELETYPE INTERFACE

4. DESCRIPTIVE NOTES (Type of report and inclusive dates)
Memorandum

5. AUTHOR(S) (Last name, first name, initial)
K.E. Burkhalter, Jr.

6. REPORT DATE
April 1968

7a. TOTAL NO. OF PAGES
20

7b. NO. OF REFS

8a. CONTRACT OR GRANT NO.
DA-49-083 OSA-3050

b. PROJECT NO.

c.

d.

9a. ORIGINATOR'S REPORT NUMBER(S)
Memorandum 16

9b. OTHER REPORT NO(S) (Any other numbers that may be assigned this report)

10. AVAILABILITY/LIMITATION NOTICES
Qualified requesters may obtain copies of this report from DDC.

11. SUPPLEMENTARY NOTES

12. SPONSORING MILITARY ACTIVITY
Advanced Research Projects Agency

13. ABSTRACT

DD FORM 1 JAN 64 1473

Unclassified
Security Classification

14. KEY WORDS	LINK A ROLE	LINK A WT	LINK B ROLE	LINK B WT	LINK C ROLE	LINK C WT

INSTRUCTIONS

1. ORIGINATING ACTIVITY: Enter the name and address of the contractor, subcontractor, grantee, Department of Defense activity or other organization *(corporate author)* issuing the report.

2a. REPORT SECURITY CLASSIFICATION: Enter the overall security classification of the report. Indicate whether "Restricted Data" is included. Marking is to be in accordance with appropriate security regulations.

2b. GROUP: Automatic downgrading is specified in DoD Directive 5200.10 and Armed Forces Industrial Manual. Enter the group number. Also, when applicable, show that optional markings have been used for Group 3 and Group 4 as authorized.

3. REPORT TITLE: Enter the complete report title in all capital letters. Titles in all cases should be unclassified. If a meaningful title cannot be selected without classification, show title classification in all capitals in parenthesis immediately following the title.

4. DESCRIPTIVE NOTES: If appropriate, enter the type of report, e.g., interim, progress, summary, annual, or final. Give the inclusive dates when a specific reporting period is covered.

5. AUTHOR(S): Enter the name(s) of author(s) as shown on or in the report. Enter last name, first name, middle initial. If military, show rank and branch of service. The name of the principal author is an absolute minimum requirement.

6. REPORT DATE: Enter the date of the report as day, month, year; or month, year. If more than one date appears on the report, use date of publication.

7a. TOTAL NUMBER OF PAGES: The total page count should follow normal pagination procedures, i.e., enter the number of pages containing information.

7b. NUMBER OF REFERENCES: Enter the total number of references cited in the report.

8a. CONTRACT OR GRANT NUMBER: If appropriate, enter the applicable number of the contract or grant under which the report was written.

8b, 8c, & 8d. PROJECT NUMBER: Enter the appropriate military department identification, such as project number, subproject number, system numbers, task number, etc.

9a. ORIGINATOR'S REPORT NUMBER(S): Enter the official report number by which the document will be identified and controlled by the originating activity. This number must be unique to this report.

9b. OTHER REPORT NUMBER(S): If the report has been assigned any other report numbers *(either by the originator or by the sponsor)*, also enter this number(s).

10. AVAILABILITY/LIMITATION NOTICES: Enter any limitations on further dissemination of the report, other than those imposed by security classification, using standard statements such as:

(1) "Qualified requesters may obtain copies of this report from DDC."

(2) "Foreign announcement and dissemination of this report by DDC is not authorized."

(3) "U. S. Government agencies may obtain copies of this report directly from DDC. Other qualified DDC users shall request through _____."

(4) "U. S. military agencies may obtain copies of this report directly from DDC. Other qualified users shall request through _____."

(5) "All distribution of this report is controlled. Qualified DDC users shall request through _____."

If the report has been furnished to the Office of Technical Services, Department of Commerce, for sale to the public, indicate this fact and enter the price, if known.

11. SUPPLEMENTARY NOTES: Use for additional explanatory notes.

12. SPONSORING MILITARY ACTIVITY: Enter the name of the departmental project office or laboratory sponsoring *(paying for)* the research and development. Include address.

13. ABSTRACT: Enter an abstract giving a brief and factual summary of the document indicative of the report, even though it may also appear elsewhere in the body of the technical report. If additional space is required, a continuation sheet shall be attached.

It is highly desirable that the abstract of classified reports be unclassified. Each paragraph of the abstract shall end with an indication of the military security classification of the information in the paragraph, represented as *(TS)*, *(S)*, *(C)*, or *(U)*.

There is no limitation on the length of the abstract. However, the suggested length is from 150 to 225 words.

14. KEY WORDS: Key words are technically meaningful terms or short phrases that characterize a report and may be used as index entries for cataloging the report. Key words must be selected so that no security classification is required. Identifiers, such as equipment model designation, trade name, military project code name, geographic location, may be used as key words but will be followed by an indication of technical context. The assignment of links, rules, and weights is optional.