ESD-TR-68-81
ESTI FILE COPY

ESD-TR-68-81

ESD RECORD COPY
RETURN
SCIENTIFIC & TECHNICAL INFORMATION DIVISION
(ESTI), BUILDING 1211

ESD ACCESSION LIST
ESTI Call No. 60620
Copy No. 1 of 1 cys.

Technical Note 1968-5

1 of 1

T. S. Seay

Short-Term Oscillator Stability Specifications for Phase-Locked Loops

29 April 1968

Prepared under Electronic Systems Division Contract AF 19(628)-5167 by

Lincoln Laboratory
MASSACHUSETTS INSTITUTE OF TECHNOLOGY
Lexington, Massachusetts

AD0669070

The work reported in this document was performed at Lincoln Laboratory, a center for research operated by Massachusetts Institute of Technology, with the support of the U.S. Air Force under Contract AF 19(628)-5167.

This report may be reproduced to satisfy needs of U.S. Government agencies.

This document has been approved for public release and sale; its distribution is unlimited.

MASSACHUSETTS INSTITUTE OF TECHNOLOGY

LINCOLN LABORATORY

SHORT-TERM OSCILLATOR STABILITY SPECIFICATIONS FOR PHASE-LOCKED LOOPS

T. S. SEAY

Group 62

TECHNICAL NOTE 1968-5

29 APRIL 1968

LEXINGTON MASSACHUSETTS

ABSTRACT

The specification of short-term oscillator stability for a phase-locked loop is treated. Measurements are described which will assure the desired performance. The relationship to the conventional fractional frequency deviation specification is included.

Accepted for the Air Force
Franklin C. Hudson
Chief, Lincoln Laboratory Office

I. INTRODUCTION

Phase-locked loops are often employed to derive synchronous local carriers for coherent communication systems. Because the stabilities of the various system oscillators can limit performance, the design engineer is often called upon to specify oscillators so that they will cause less than a given amount of performance degradation. In this paper we shall examine some effects of short-term oscillator instabilities upon the second order phase-locked loop. We also show how the magnitude of these effects may be predicted from simple measurements or from conventional RMS frequency deviation specifications. Very little, if any, of the content is new as such; the utility of this paper resides in demonstrating the interrelations among the results of various workers and providing guidelines for the short-term stability specifications of oscillators for coherent communications systems.

II. COMMUNICATION SYSTEM MODEL

To provide a vehicle for discussion, we assume that the system under study may be reduced to the simple block diagram of Fig. 1. The unmodulated transmitted signal suffers a fixed attenuation, is delayed by a (possibly time-varying) phase shift φ_1, and is received in the presence of additive Gaussian noise $n(t)$. The spectrum of the noise is assumed flat, with real density N_o watts/Hz across the bandwidth of the RF filter. No fading is allowed – the desired received signal has constant power P_r.

The word oscillator is used to denote any set of frequency synthesis equipment. Thus the box labeled transmitter oscillator may correspond to an actual interconnection of several oscillators, amplifiers, mixers, filters, etc., whose nominal output frequency ω_c is the desired carrier frequency. Similarly, the receiver equivalent voltage controlled oscillator (VCO) would ordinarily be realized by one or more oscillators, mixers, filters, etc.

The received signal is written as $\sqrt{2P_r} \cos [\omega_c t + \theta_T (t) + \varphi(t)] + n(t)$. $\theta_T (t)$ represents phase variations of the transmitted signal while $\varphi(t)$ represents channel-induced phase fluctuations.

III. EQUIVALENT OSCILLATOR MODEL

The short-term phase fluctuations observed in the output of a quartz crystal frequency standard are attributed to three major effects.[1,2,3] One type of fluctuations

result from perturbations of the oscillator by thermal and shot noise generated in the crystal and associated oscillator circuitry. A flat power spectral density of frequency fluctuations is associated with this noise.

A second type of fluctuations is attributed to crystal unit and circuit parameter changes. The resulting power spectral density of frequency fluctuations appears to have an f^{-1} characteristic. (Of course, the true power spectrum cannot behave as f^{-1} all the way down to $f = 0$, because this would imply infinite power in the process and, therefore, arbitrary long-term frequency excursions. In the following analysis the spectrum is always weighted by a function having a zero at $f = 0$.) This type of noise is often referred to as flicker noise.

The third type of fluctuations is produced by additive noise. To obtain long-term stability, oscillators usually operate at low power levels and are followed by several amplifier stages to achieve a reasonable output power. These amplifiers add noise (assumed Gaussian) to the signal. Often a narrowband filter follows the amplifiers to reduce this noise. If the noise power is small compared to the desired signal power, half the noise appears as amplitude modulation sidebands and the other half as phase modulation sidebands.[2] The resulting power spectral density of the frequency fluctuations depends on the particular clean-up filter used.

Temperature variations, automatic gain control perturbations, power supply and loading changes, and vibration can all contribute additional phase fluctuations to oscillator outputs.

Perfect frequency multiplication by a factor of N will multiply phase variations by the same factor. Aside from this, the primary degradation of the short-term stability of the oscillator introduced by well-designed frequency synthesis equipment should be additive noise. Therefore, the general form of the spectrum of the phase of the frequency synthesis equipment's output may be taken to be the same as that of a crystal oscillator.

Now if we let the oscillator (in the general sense) output be $\cos[\omega_c t + \theta(t)]$, and if we assume an output filter whose equivalent positive frequency transfer function is given by

$$H(j\omega) \simeq \frac{\omega_1}{j(\omega - \omega_c) + \omega_1} \quad ,$$

then the assumed power spectral density for the frequency fluctuations is given by

$$S_{\dot{\theta}}(\lambda) = N_1 + \frac{N_2}{|\lambda|} + N_3 \cdot \frac{\lambda^2 \omega_1^2}{\lambda^2 + \omega_1^2} \quad .$$

N_1 is the equivalent white noise density of the perturbing noise, N_2 is the constant describing the intensity of the f^{-1} noise, and N_3 is the effective unfiltered additive noise density. The equivalent phase noise density is given by

$$S_{\theta}(\lambda) = \frac{N_1}{\lambda^2} + \frac{N_2}{|\lambda|^3} + \frac{N_3 \omega_1^2}{\lambda^2 + \omega_1^2} \quad .$$

The assumption used above that the additive noise power is much less than the signal power corresponds to satisfaction of the inequality $N_3 \omega_1 \ll 1$.

IV. PHASE-LOCKED LOOP MODEL

The following discussion assumes some familiarity with phase-locked loops. More detail may be obtained from Ref. 4.

In normal operation, the phase-locked loop error θ_ϵ will be much less than 1 radian, so that a linearized analysis is sufficiently accurate. For random disturbances, the variance of the phase error $\sigma_{\theta_\epsilon}^2$ provides a convenient measure of performance; operational thresholds are often specified by maximum allowed values of $\sigma_{\theta_\epsilon}^2$. Clearly the part of $\sigma_{\theta_\epsilon}^2$ due to oscillator instabilities should be much less than that due to the additive noise and channel fluctuations at the minimum received signal-to-noise ratio, if the oscillators are not to degrade system performance.

The loop filter transfer function is assumed to be of the form $K(1 + a/s)$. The loop damping ratio ξ and natural frequency ω_n are related to these parameters by $2\xi\,\omega_n = A\,K$ and $\omega_n^2 = a\,A\,K$. The effective gain A is given by $A = \sqrt{P_r}$.

The equivalent linearized model for the system in Fig. 1 is given in Fig. 2. (The details of the derivation of the equivalent phase-locked loop model are given in

Ref. 4.) The effective noise $n'(t)$ is modeled as white Gaussian noise with two-sided spectral density $\frac{N_o}{2}$. The subscripts T and R denote transmitter and receiver, respectively.

The oscillator perturbing noises are represented as $n_{1T}(t)$ and $n_{1R}(t)$. The noises $n_{2T}(t)$ and $n_{2R}(t)$ represent oscillator flicker noise, while $n_{3T}(t)$ and $n_{3R}(t)$ represent the effects of additive oscillator noise. The noises $n_{4T}(t)$ and $n_{4R}(t)$ are included to describe miscellaneous effects such as vibration. Note that all of these terms represent the frequency fluctuations due to the corresponding physical processes.

The spectra associated with the first three oscillator noises are given by

$$S_{n_{1T}}(\lambda) = N_{1T} \qquad S_{n_{1R}}(\lambda) = N_{1R}$$

$$S_{n_{2T}}(\lambda) = \frac{N_{2T}}{|\lambda|} \qquad S_{n_{2R}}(\lambda) = \frac{N_{2R}}{|\lambda|}$$

$$S_{n_{3T}}(\lambda) = N_{3T}\frac{\lambda^2\,\omega_{1T}^2}{\lambda^2 + \omega_{1T}^2} \qquad S_{n_{3R}}(\lambda) = N_{3R}\frac{\lambda^2\,\omega_{1R}^2}{\lambda^2 + \omega_{1R}^2} \quad .$$

Writing out the operator equations describing Fig. 2 we find

$$\theta_\epsilon(t) = -\frac{2\xi\,\omega_n\,s + \omega_n^2}{s^2 + 2\xi\,\omega_n\,s + \omega_n^2}\left[\frac{n'(t)}{A}\right]$$

$$+\frac{s^2}{s^2 + 2\xi\,\omega_n\,s + \omega_n^2}\left[\varphi(t)\right]$$

$$+\frac{s}{s^2+2\xi\,\omega_n\,s+\omega_n^2}\left[n_{1T}(t)+n_{2T}(t)+n_{3T}(t)+n_{4T}(t)-n_{1R}(t)-n_{2R}(t)-n_{3R}(t)-n_{4R}(t)\right] .$$

The first term describes the effects of the additive noise, while the second shows the effects of channel phase fluctuations. The third term shows the effect of the oscillator noises. Note that the transmitter and receiver oscillator noises, and channel phase perturbations, affect θ_ϵ in the same manner.

V. LOOP PHASE ERROR VARIANCE

Since the various noises are assumed independent, the loop error variance may be written as

$$\sigma_{\theta_\epsilon}^2 = \sum_{i=1}^{4} \sigma_i^2 \quad ,$$

where σ_1^2 is due to received additive noise, σ_2^2 is due to random channel phase fluctuations, and σ_3^2 and σ_4^2 are the contributions of the transmitter and receiver oscillators, respectively. By direct calculation,

$$\sigma_1^2 = \frac{N_o}{P_r}\,\frac{\omega_n}{4}\left[2\xi + \frac{1}{2\xi}\right]$$

$$\sigma_2^2 = \int_{-\infty}^{\infty} \left|\frac{s^2}{s^2 + 2\xi\,\omega_n\,s + \omega_n^2}\right|^2_{s=j\omega} S_\varphi(\omega)\,\frac{d\omega}{2\pi}$$

where $S_\varphi(\omega)$ is the power spectral density of the channel phase variations.

$$\sigma_3^2 = \frac{N_{1T}}{4\xi\omega_n} + \frac{N_{2T}}{2\pi\omega_n^2} f(\xi) + \frac{\left[\omega_{1T} + \frac{\omega_n}{2\xi}\right] N_{3T}}{2\left[1 + 2\xi\frac{\omega_n}{\omega_{1T}} + \left(\frac{\omega_n}{\omega_{1T}}\right)^2\right]} + \sigma_{vT}^2$$

$$\sigma_{vT}^2 = \int_{-\infty}^{\infty} \left| \frac{s}{s^2 + 2\xi\omega_n s + \omega_n^2} \right|^2_{s=j\omega} S_{n_{4T}}(\omega) \frac{d\omega}{2\pi}$$

where $S_{n_{4T}}(\omega)$ is the power spectral density of the noise due to miscellaneous effects. The function $f(\xi)$ is given by

$$f(\xi) = \begin{cases} \frac{1}{2\xi\sqrt{1-\xi^2}}\left[\frac{\pi}{2} - \tan^{-1}\left(\frac{2\xi^2-1}{2\xi\sqrt{1-\xi^2}}\right)\right] & , \xi < 1 \\ 1 & , \xi = 1 \\ \frac{1}{2\xi\sqrt{\xi^2-1}} \log\left[\frac{\xi+\sqrt{\xi^2-1}}{\xi-\sqrt{\xi^2-1}}\right] & , \xi > 1 \end{cases} .$$

The expression for σ_4^2 is the same as that for σ_3^2 with R substituted for T. A common choice for the loop damping ratio is $\xi = \frac{1}{\sqrt{2}}$, for which we get

$$\sigma_1^2 = .375\sqrt{2}\,\omega_n \frac{N_o}{P_r}$$

$$\sigma_3^2 \simeq .35\frac{N_{1T}}{\omega_n} + .25\frac{N_{2T}}{\omega_n^2} + \frac{N_{3T}\,\omega_{1T}\left[1 + \frac{\omega_n}{\sqrt{2}\,\omega_{1T}}\right]}{2\left[1 + \frac{\sqrt{2}\,\omega_n}{\omega_{1T}} + \left(\frac{\omega_n}{\omega_{1T}}\right)^2\right]} + \sigma_{vT}^2 .$$

We observe that for sufficiently small loop natural frequency ω_n and miscellaneous transmitter oscillator noise variance σ_{vT}^2 the term $.25\ N_{2T}/\omega_n^2$ (due to flicker noise) dominates σ_3^2, while for sufficiently large ω_n either the term containing N_{1T} (due to perturbation noise) or the term containing N_{3T} (due to additive noise) will dominate. In many applications the term corresponding to the perturbation noise can be neglected.[1, 2, 5]

For typical carrier tracking loops, the ratio of the loop natural frequency to the post-oscillator noise filter (ω_n/ω_{1T}) is very small, so that the third term in the expression for σ_3^2 becomes $\frac{N_{3T}\,\omega_{1T}}{2}$, which is the total phase noise power due to the additive Gaussian noise.

The above discussion also applies to σ_4^2 due to the receiver oscillator. However, in drawing the block diagram of Fig. 2 we have assumed that the phase shift characteristic of the filter following the local oscillator could be ignored. This implies $(\omega_n/\omega_{1R}) \ll 1$. If this condition is not satisfied, the effect of the filter upon loop stability and tracking dynamics must be examined.

VI. MEASUREMENT OF σ_3^2 AND σ_4^2

The maximum allowed values of σ_3^2 and σ_4^2, together with the loop damping ratio ξ and natural frequency ω_n, define the necessary transmitter and receiver short-term stability specifications. A typical requirement might be $\sigma_3^2 < .005\ (\text{rad})^2$, under given environmental conditions, which insures that the loop threshold performance is controlled by the received signal-to-noise ratio and received signal dynamics. This section of the paper describes several techniques for the measurement of σ_3^2 and σ_4^2.

A. Direct Measurement of $\sigma_3^2 + \sigma_4^2$

If the transmitter and receiver are available in the same place, and if the receiver phase-locked loop gain may be temporarily modified, $\sigma_3^2 + \sigma_4^2$ may be measured as shown in Fig. 3. The signal e(t) is the phase-locked loop phase detector output. The receiver phase-locked loop gain must ordinarily be changed to correct for the variation of ξ and ω_n with the received signal strength.

Of the various types of averaging techniques which might be used in the configuration of Fig. 3, a particularly convenient one employs a low pass RC filter with transfer function $H(s) = \frac{1}{1+Ts}$. Then the expected value μ of the averager output $y(t)$ is $E[e^2(t)]$, which is $\sigma_3^2 + \sigma_4^2$. Of course since $y(t)$ is a sample function of a random process, it can (and generally will) vary with time.

The time constant T may be selected so that $|y(t) - \mu|$ is less than some desired value for a specified percentage of the time. The primary difficulty in giving an a priori specification of T is, of course, that the spectrum of $e(t)$ must be known. In practice a T on the order of several ω_n^{-1} seconds should be sufficient. A detailed discussion of bounds on the variance of $y(t)$ is given in Ref. 6.

B. Direct Measurement of σ_3^2 or σ_4^2

If the transmitter or receiver oscillator is replaced by a frequency source known to be very good the arrangement of Fig. 3 may be used to obtain σ_3^2 (or σ_4^2) directly. If the replacement source is not particularly good, the true value of σ_3^2 or σ_4^2 may be upper bounded by assigning all of the measured phase jitter power to the system oscillator. If the oscillators are similar, one-half of the total variance $\sigma_3^2 + \sigma_4^2$ is sometimes attributed to each oscillator.

Often one must determine if the stability of a given oscillator is adequate without direct access to either the complete receiver or transmitter. Then one approach would be to construct a phase-locked loop whose error behavior is designed to be identical to that of the receiver, as indicated in Fig. 4.[7]

However, because the transfer functions from the transmitter and receiver oscillator noise sources are the same, the oscillators under test may be interchanged with the reference oscillator of Fig. 4 to give the alternate test configurations shown in Fig. 5. From the second configuration of Fig. 4 and the first configuration of Fig. 5 we note that only one test setup is needed to measure both σ_3^2 and σ_4^2.

C. Discriminator Test

Often for one reason or another, a test configuration employing a phase-locked loop is inconvenient. If a discriminator is available, the alternate technique illustrated in Fig. 6 may be used. The filter transfer function

$$H(s) = \frac{Gs}{s^2 + 2\xi\,\omega_n\, s + \omega_n^2} \quad ,$$

where G is a scaling factor, is selected so that the linearized transfer function from the equivalent oscillator noises to the equivalent error voltage e(t) is identical to that for the original receiver.

VII. RMS FREQUENCY DEVIATION SPECIFICATION

Short-term oscillator stability is often specified by a measured RMS frequency deviation $\frac{\Delta f}{f}$ for a given averaging time τ. In this section, we wish to point out how the parameters N_1, N_2, and N_3 characterizing the short-term stability of a particular oscillator may be determined from given $\frac{\Delta f}{f}$ versus τ data.

The quantity $\frac{\Delta f}{f}$ is related to oscillator behavior in the following manner. Let the oscillator output signal be $\cos[\omega_o t + \theta(t)]$ where $\theta(t)$ represents phase fluctuations. The average oscillator frequency departure $<\dot{\theta}>_{t,\tau}$ of a time interval τ seconds long centered on time t is defined by

$$<\dot{\theta}>_{t,\tau} = \frac{1}{\tau} \int_{t-\tau/2}^{t+\tau/2} \dot{\theta}(\mu)\, d\mu = \frac{\Delta\theta}{\tau} \quad ,$$

where $\Delta\theta$ is the difference $\theta(t+\tau/2) - \theta(t-\tau/2)$. Let $\theta(j\tau+t) = \theta_j$ and $\Delta\theta_j = \theta_j - \theta_{j-1}$. The measured variance of N adjacent samples of the average frequency departure is determined from

$$\sigma^2 (N, \tau) = \frac{1}{N-1} \sum_{i=1}^{N} \left[\frac{\Delta\theta_i}{\tau} - \frac{\theta_N - \theta_o}{N\tau} \right]^2 \quad .$$

The term

$$\frac{\theta_N - \theta_o}{N\tau}$$

is included to eliminate the effect of a constant drift. The average value of $\sigma^2 (N, \tau)$ is related to the power spectral density of the phase fluctuations by

$$\overline{\sigma^2 (N, \tau)} = \int_{-\infty}^{\infty} S_{\dot{\theta}} (\lambda) \left[\frac{\sin^2 (\lambda \tau/2)}{(\lambda \tau/2)^2} - \frac{\sin^2 (N \lambda \tau/2)}{(N \lambda \tau/2)^2} \right] \frac{d\lambda}{2\pi} \quad .$$

Then the RMS frequency deviation is given by

$$\frac{\Delta f}{f} = \frac{\sqrt{\overline{\sigma^2 (N, \tau)}}}{\omega_o} \quad .$$

Note that several experiments should be performed to get $\overline{\sigma^2 (N, \tau)}$. See Ref. 2 and Ref. 8 for more details.

Now if we assume the form of the power spectral density of the frequency fluctuations is

$$S_{\dot{\theta}} (\lambda) = N_1 + \frac{N_2}{|\lambda|} + \frac{N_3 \omega_1^2 \lambda^2}{\omega_1^2 + \lambda^2}$$

as described above, we find

$$\sigma^2 (N, \tau) \simeq \frac{N_1}{\tau} + K N_2 + \frac{N_3 \omega_1}{2\tau^2} \left[1 - e^{-\omega_1 \tau} \right]$$

where $K = .66 + .318 \ln (N/2)$; $K = 1.90$ for $N = 100$.

A typical asymptotic plot of $\frac{\sigma}{\omega_o}$ versus τ is given in Fig. 7. The dominant contributions are labeled for various ranges of τ. For many frequency standards it appears that the effect of the perturbing noise on $\frac{\sigma}{\omega_o}$ is negligible.[2] Also, measurements on VCO noise characteristics[5,7] indicate that the perturbation noise gives negligible contributions to narrow-band phase-locked loop error variances compared with the contributions due to flicker noise.

The expression for σ^2 may be applied to several measurements of $\frac{\Delta f}{f}$ for various τ and N to provide estimates of the characteristic parameters N_1, N_2, and N_3. The contribution of each term to σ_4^2 for given loop parameters may then be determined. Conversely, for a given maximum σ_3^2 or σ_4^2, bounds on $\frac{\Delta f}{f}$ as a function of τ may be deduced from the above equation.

VIII. AN EXAMPLE

A phase-locked carrier tracking loop is to be employed in a telemetry receiver operating at 250 MHz. All local oscillator signals are derived by frequency multiplication from a single 5 MHz VCO. From dynamic tracking and signal-to-noise ratio considerations the desired loop parameters are $\xi = .7$ and $\omega_n = 20$.

Because of the way in which the oscillator signals are related, the equivalent local oscillator signal is just the VCO output multiplied in frequency by 50.

The proposed 5 MHz VCO has the following performance for $N = 100$:

$\frac{\Delta f}{f}$	τ, seconds
10^{-9}	1
2×10^{-9}	.1

10^{-8}	.01
10^{-7}	.001 .

The 1 second measurement should be dominated by flicker noise, while the 1 msec measurement is dominated by additive noise. Therefore, at 5 MHz

$$\frac{\Delta f}{f} = \frac{\sigma}{\omega_o} \cong \frac{\sqrt{1.90\ N_2}}{\omega_o} \qquad \text{for } \tau = 1 \text{ sec}$$

$$\frac{\Delta f}{f} = \frac{\sigma}{\omega_o} \cong \frac{\sqrt{\frac{N_3\ \omega_1}{2}}}{\tau\ \omega_o} \qquad \text{for } \tau = 1 \text{ msec} \quad .$$

(The post-oscillator filter has a bandwidth much greater than 1 kHz.)

Solving: $1.90\ N_2 = \pi^2 \times 10^{-4}$ and

$$\frac{N_3\ \omega_1}{2} = \pi^2 \times 10^{-6} \quad .$$

The equivalent parameters at 250 MHz are given by

$$1.90 N_2' = (50)^2 \times \pi^2 \times 10^{-4} = \left(\frac{\pi}{2}\right)^2$$

$$\frac{N_3'\ \omega_1}{2} = \left(\frac{\pi}{2}\right)^2 \times 10^{-2} \quad .$$

Since perturbation noise is assumed negligible, we have

$$\frac{N_1'}{\tau} \ll 1.90\ N_2' \quad ,$$

which implies

$$N_1' \ll \left(\frac{\pi}{2}\right)^2 \quad .$$

The expression for σ_4^2 becomes

$$\sigma_4^2 \simeq 1.75 \times 10^{-2} N_1' + 6.25 \times 10^{-4} N_2' + \frac{N_3' \omega_1}{2}$$

$$\simeq 2.46 \times 10^{-2} \quad .$$

The contribution $\frac{N_3' \omega_1}{2}$ due to additive noise is much greater than that from either of the other terms. Assuming all the other system oscillators are much better, the equation for $\sigma_{\theta_\epsilon}^2$ shows that if

$$\left(\frac{P_r}{N_o}\right)_o = 106$$

is the received signal-to-noise ratio required to give $\sigma_{\theta_\epsilon}^2 = .1\ (\text{rad})^2$ with ideal oscillators, then about $1.33 \times (P_r/N_o)_o = 141$ (or an additional 1.24 db) is actually required to obtain $\sigma_{\theta_\epsilon}^2 = .1$ with the given oscillator and specified loop parameters.

REFERENCES

1. E.A. Gerber and R.A. Sykes, "State of the Art – Quartz Crystal Units and Oscillators," Proc. IEEE, 54, No. 2, 103-116 (February 1966).

2. L.S. Cutler and C.L. Searle, "Some Aspects of the Theory and Measurement of Frequency Fluctuations in Frequency Standards," Proc. IEEE, 54, No. 2, 136-154 (February 1966).

3. H.P. Stratemeyer, "The Stability of Standard-Frequency Oscillators," The General Radio EXPERIMENTER, 38, No. 6, 1-16 (June 1964).

4. A.J. Viterbi, Principles of Coherent Communication, (McGraw-Hill, 1966).

5. C. Cooper, "VCO Noise Measurement and Optimum Tracking Filters," JPL Space Programs Summary 37-42, 111, 67-71.

6. J. Holsinger, "Confidence Intervals and Sample Sizes in the Measurement of Signal and Noise Powers, Signal-to-Noise Ratios and Probability of Error," Group Report 34G-9, M.I.T.-Lincoln Laboratory (3 January 1963).

7. R. Syndor, J.J. Caldwell and B.E. Rose, "Frequency Stability Requirements for Space Communications and Tracking Systems," Proc. IEEE, 54, No. 2, 231-236 (February 1966).

8. J.A. Barnes, "Atomic Timekeeping and the Statistics of Precision Signal Generators," Proc. IEEE, 54, No. 2, 207-230 (February 1966).

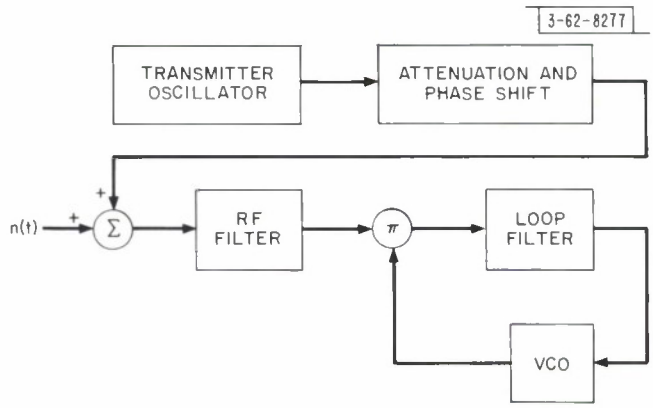

Fig. 1. Simplified communication system.

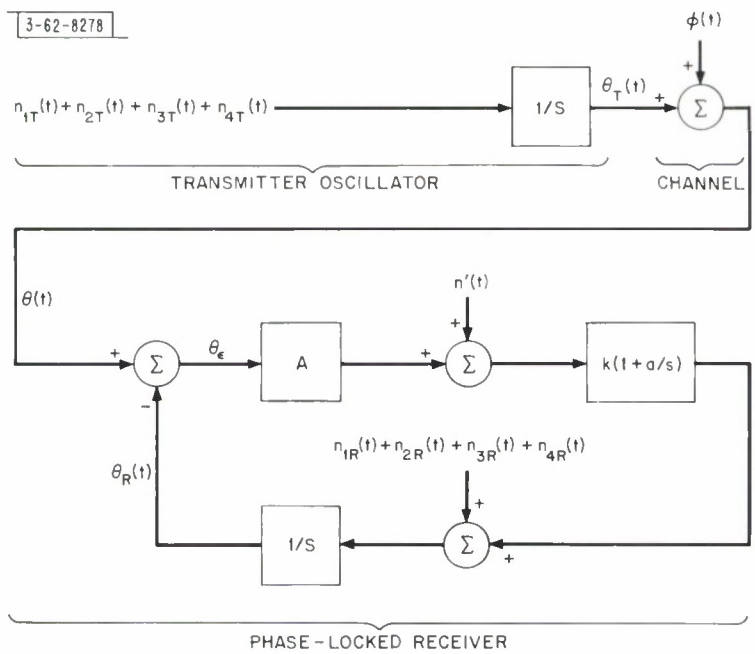

Fig. 2. Linearized model of simplified communication system.

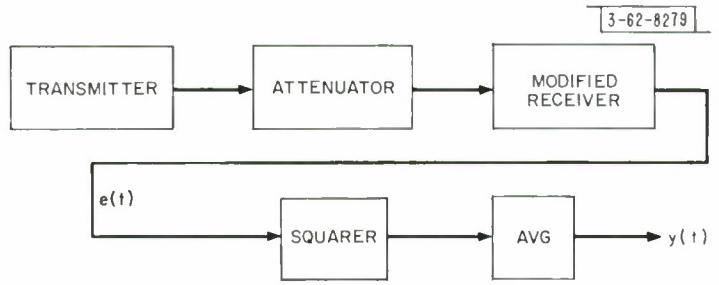

Fig. 3. Direct measurement of $\sigma_3^2 + \sigma_4^2$.

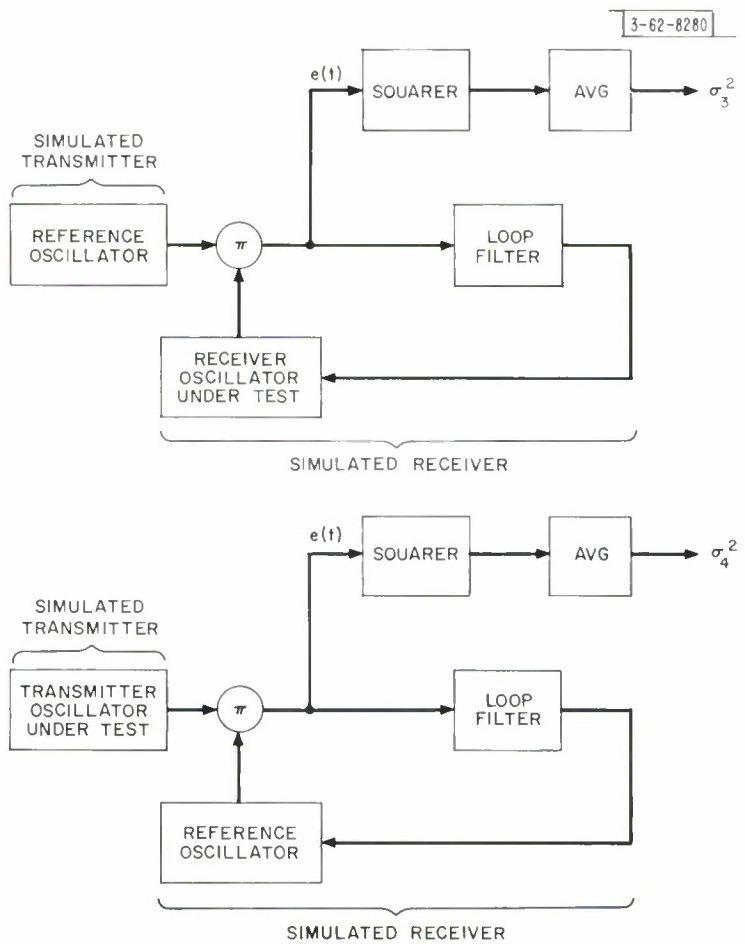

Fig. 4. Measurements of $\sigma_3^2 + \sigma_4^2$.

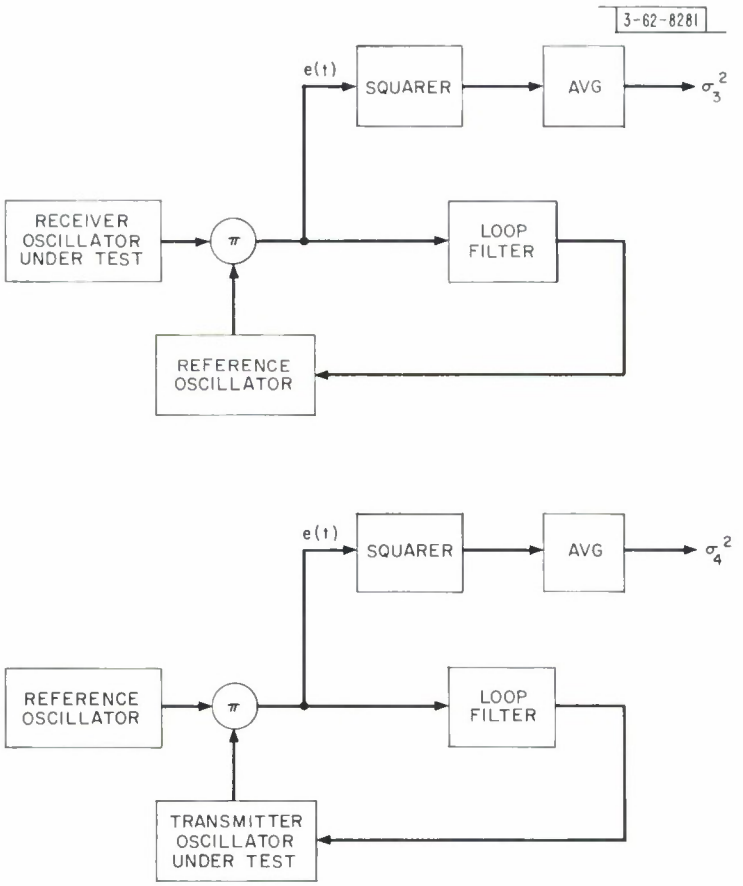

Fig. 5. Alternate measurements of $\sigma_3^2 + \sigma_4^2$.

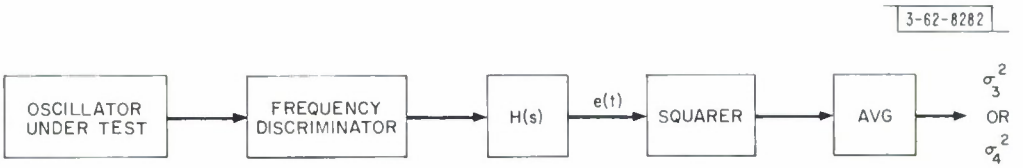

Fig. 6. Discriminator measurement of σ_3^2 or σ_4^2.

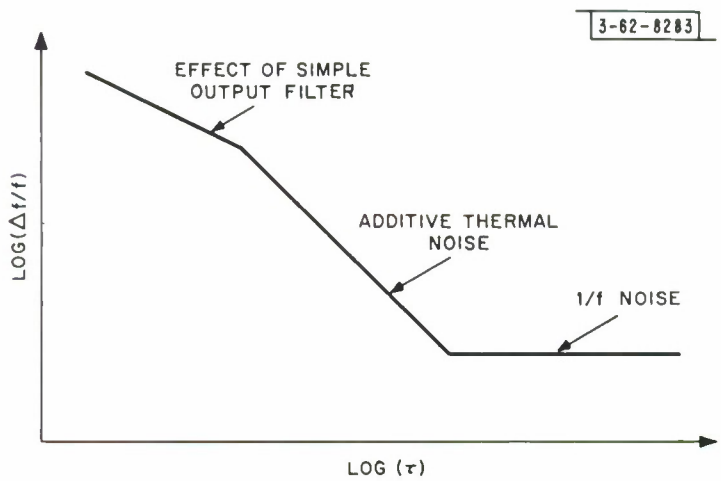

Fig. 7. Dominant effects upon short term stability. (From Ref. 1)

DOCUMENT CONTROL DATA – R&D

(Security classification of title, body of abstract and indexing annotation must be entered when the overall report is classified)

1. ORIGINATING ACTIVITY *(Corporate author)* Lincoln Laboratory, M.I.T.	2a. REPORT SECURITY CLASSIFICATION Unclassified 2b. GROUP None

3. REPORT TITLE

Short-Term Oscillator Stability Specifications for Phase-Locked Loops

4. DESCRIPTIVE NOTES *(Type of report and inclusive dates)*

Technical Note

5. AUTHOR(S) *(Last name, first name, initial)*

Seay, Thomas S.

6. REPORT DATE 29 April 1968	7a. TOTAL NO. OF PAGES 24	7b. NO. OF REFS 8
8a. CONTRACT OR GRANT NO. AF 19(628)-5167 b. PROJECT NO. 649L c. d.	9a. ORIGINATOR'S REPORT NUMBER(S) TN 1968-5 9b. OTHER REPORT NO(S) *(Any other numbers that may be assigned this report)* ESD-TR-68-81	

10. AVAILABILITY/LIMITATION NOTICES

This document has been approved for public release and sale; its distribution is unlimited.

11. SUPPLEMENTARY NOTES None	12. SPONSORING MILITARY ACTIVITY Air Force Systems Command, USAF

13. ABSTRACT

The specification of short-term oscillator stability for a phase-locked loop is treated. Measurements are described which will assure the desired performance. The relationship to the conventional fractional frequency deviation specification is included.

14. KEY WORDS

oscillator stability
phase-locked loops
short-term oscillator stability
coherent communications systems