5

AD

AD668243

AMRA CR 66-05/13

CENTER FOR HIGH ENERGY FORMING

ELEVENTH QUARTERLY REPORT OF TECHNICAL PROGRESS

J. D. Mote

April 1, 1968

Army Materials and Mechanics Research Center
Watertown, Massachusetts 02172

Martin Marietta Corporation
Denver Division
Contract DA 19-066-AMC-266(X)
The University of Denver
Denver, Colorado

D D C
RECEIVED
MAY 2 1968
C

Sponsored by

Advanced Research Projects Agency
ARPA Order No. 720

Distribution of this document is unlimited.

31

ACCESSION for
CFSTI WHITE SECTION
DDC BUFF SECTION
UNANNOUNCED
JUSTIFICATION
BY
DISTRIBUTION/AVAILABILITY CODES
DIST. AVAIL. and/or SPECIAL
/

The findings of this report are not to be construed as an official Department of the Army position, unless so designated by other authorized documents.

Mention of any trade names or manufacturers in this report shall not be construed as advertising nor as an official indorsement or approval of such products or companies by the United States Government.

DISPOSITION INSTRUCTIONS

Destroy this report when it is no longer needed. Do not return it to originator.

AMRA CR 66-05/13

CENTER FOR HIGH ENERGY FORMING

ELEVENTH QUARTERLY REPORT OF TECHNICAL PROGRESS

J. D. Mote

April 1, 1968

Army Materials and Mechanics Research Center
Watertown, Massachusetts 02172

AMCMS CODE 5900.21.25191
PROJ NR. W2 5 C0536 01 A1 AW

Martin Marietta Corporation
Denver Division
Contract DA 19-066-AMC-266(X)
The University of Denver
Denver, Colorado

Distribution of this document is unlimited.

ABSTRACT

Strain gage data showing strain- and pressure-time histories versus charge stand-off during explosive deformation is given. The results show a decrease in strain rate with an increase in stand-off at constant charge weight.

Recent results of a numerical solution for deformation and instability in the hydrostatic bulge test are presented.

Summary information is presented for technology transfer; mechanics of energy transfer and high velocity metal deformation; electromagnetic forming; strain rate effects; the effect of explosive forming on the terminal properties of materials, and explosive welding.

CONTENTS

	Page
Abstract	i
Contents	ii
I. MARTIN MARIETTA CORPORATION	
1. Strain Gage Measurements	1
A. Introduction	1
B. General Test Set-up	11
C. Instrumentation System	11
D. Strain Gage Evaluation	14
E. Results of Measurement	15
2. Numerical Solution for Deformation and Instability in the Hydrostatic Bulge Test	15
II. UNIVERSITY OF DENVER	
1. Technology Transfer	19
2. Mechanics of Energy Transfer and High Velocity Metal Deformation	19
3. Electromagnetic Forming	20
4. Strain Rate Effects	20
5. Comparison of Terminal Properties of Explosively and Conventionally Formed Aluminum Alloy 2014	21
6. Shock-Twinning Behavior of Molybdenum	22
7. Properties of Explosively Formed AISI Steels 4130, 4140, and 4340	
8. Explosive Welding	23

CONTENTS

	Page
Table	
Table I Log of Tests and Results	2
Figures	
1. Strain Time Histories for Three Gage Locations Showing the Effect of Various Stand-off Distances	3
2. Schematic of Die and Clamp Set-up	4
3a Oscilloscope Trace of Test No. 068 Stand-off Distance was 1 Inch	5
3b Oscilloscope Trace of Test No. 060 Stand-off Distance was 2 Inches	5
4 The Final Strains as a Function of Undeformed Radial Distance	7
5 Strain Rate Plotted as a Function of Stand-off Distance	8
6 Strain Rate Plotted as a Function of the Log of Stand-off Distance	9
7 Tabulated Data Showing Degree of Outside Diameter Pull-in	10
8 Break Wire Switch and Explosive Charge Set-up	12
9 Strain Gage Bridge Circuit	12
10 Strain Gage Installation	13
11 Plot of Draw Depth as a Function of Blank Radius	16
12 Radial Displacements as a Function of Radius	17
13 Polar Displacement as a Function of Radius	17

I. MARTIN MARIETTA CORPORATION

1. Strain Gage Measurements

Principal Investigator: G. A. Thurston

A. Introduction

A set of tests has been conducted to measure strain- and pressure- time histories during explosive forming. The results show the effect of varying the charge stand-off distance from the blank while holding other forming parameters constant. Table 1 lists parameters in the tests and the four stand-off distances used, L = 1, 2, 4 and 6 inches. Nondimensionalized with respect to the die diameter D, the stand-off ratios were L/D = .083, .167, .25, and .5.

Each aluminum blank had three strain gages mounted on the side toward the charge. Strain- time histories were measured for each gage as the blank was free-formed into a vacuum.

The strain- time traces from each gage have been plotted in Fig. 1. The gage locations and orientation are sketched in Fig. 2. Photographs of the oscilloscope traces from each gage are reproduced in Fig. 3. Some gages did not survive the forming event. Those gages that did survive registered maximum strains comparable to the redidual strains measured on the surface of the formed dome as shown in Table 1 and Fig. 4. Figures 5 and 6 are plots of strain-rates and the log of strain-rate as a function of the stand-off ratio, L/D. The plotted strain-rates are the maximum slopes of the strain- time curves.

The results show a decrease in strain-rate with an increase in stand-off distance for a constant charge weight. Past forming experience has shown that an L/D ratio of .167 leads to uniform draw on free-formed parts. This tendency to pull-in apparently occurs at an early time in the forming because on the curve for L = 2, L/D = .167, the tangential gage C (see Fig. 1) first records compressive strain, a direct measure of pull-in, and then goes into tension. The same trend starts for L = 1, but the gage and the blank both failed in this test.

The tendency to pull-in for L/D = .167 was further demonstrated by the final amount of edge draw. This pull-in was limited in these tests to a nominal value of 8 per cent compressive strain by a catch ring that engaged a weld bead on the blank rim. For L/D = .167, the rim was completely in contact with the ring while uneven draw was exhibited for L/D = .5 and the rim did not completely draw in to the ring. This edge pull-in is tabulated in Fig. 7.

The maximum measured strain-rates due to stretching are on the order of 100 inches per inch per sec which are not extremely high. It should be kept in mind that these strain

Preceding Page Blank

TABLE I - Log of Tests and Results

Waterproofing: CW-5 (Budd Co.)
Blank Mat'l: AL 2014-0; .050 x 16 3/4" dia.
Explosive Charge: Comp A-3; 60 grain
Clamp Pressure: 200 psig
Pressure Transducer: CR67-265 (Crystal Research Inc.)
Distance Charge to Transducer: 4 inches
Blasting Cap: 6.9 grain RDX (5 6 gr A-3 equiv.)

*Bean Co. gages are number EP-08-250 BB-120
Budd Co. gages are number HE 141B

Test No.	Strain Gages	Strain Gage Adhesive	Standoff Distance (inches)	Strain Gage Results
055	Bean Co.*	C-2A (Bean Co.)	6	Gage A broke at 3.7% strain and after 1.2 m secs time. Gages B show 2.1% strain unbroken.
056	Budd Co.*	Narmco	4	Sweep rate for Gage A was too fast to indicate strain. Gage B broke at 4.9% strain and 2.7 m secs. Gage C broke at 2.1% strain and 2.7 m secs.
057	Budd Co.	GA-4 (Budd Co.)	2	All gages broke early at 60 sec.
058	Bean Co.	C-2A	4	Gage A broke at 2.8% strain and 1.1 m secs. Gages B show max. strain 3.3% and not broken. Gage C shows max. strain 0.7% and not broken.
059	Budd Co.	Gage A - GA-4 Gage B & C - Narmco	2	Gage A broke at 4% strain after .35 m secs. time. Gage B broke at .8% strain after .30 m secs. Gage C broke at .8% strain after .75 m secs.
060	Budd Co.	GA-4	2	Gage A broke at 3.5% strain at .24 m secs. Gage B broke at 3.7% strain at .64 m secs. Gage C broke at 2% strain at .90 m secs.
066	Bean Co.	Gage A - C-2E Gage B - GA-4 Gage C - GA-4	4	Gage A broke at 3.4% strain at 1.40 m secs. Gage B shows 4.8% strain and was not broken. Gage C shows 1.5% strain and was not broken.
067	Bean Co.	Gage A - C2-E Gage B - GA-4 Gage C - GA-4	6	Gage A shows 3.4% strain and was not broken. Gage B shows 1.7% strain and was not broken. Gage C shows .35% strain and was not broken.
068	Bean Co.	Gage A - GA-4 Gage B - GA-4 Gage C - C2-A	1	All gages were broken, also blank was torn. Gage A broke at 4.6% strain and 130 secs. time. Gage B broke at 3.1% strain and 200 secs. time. Gage C broke at .68% strain and 200 secs. time.

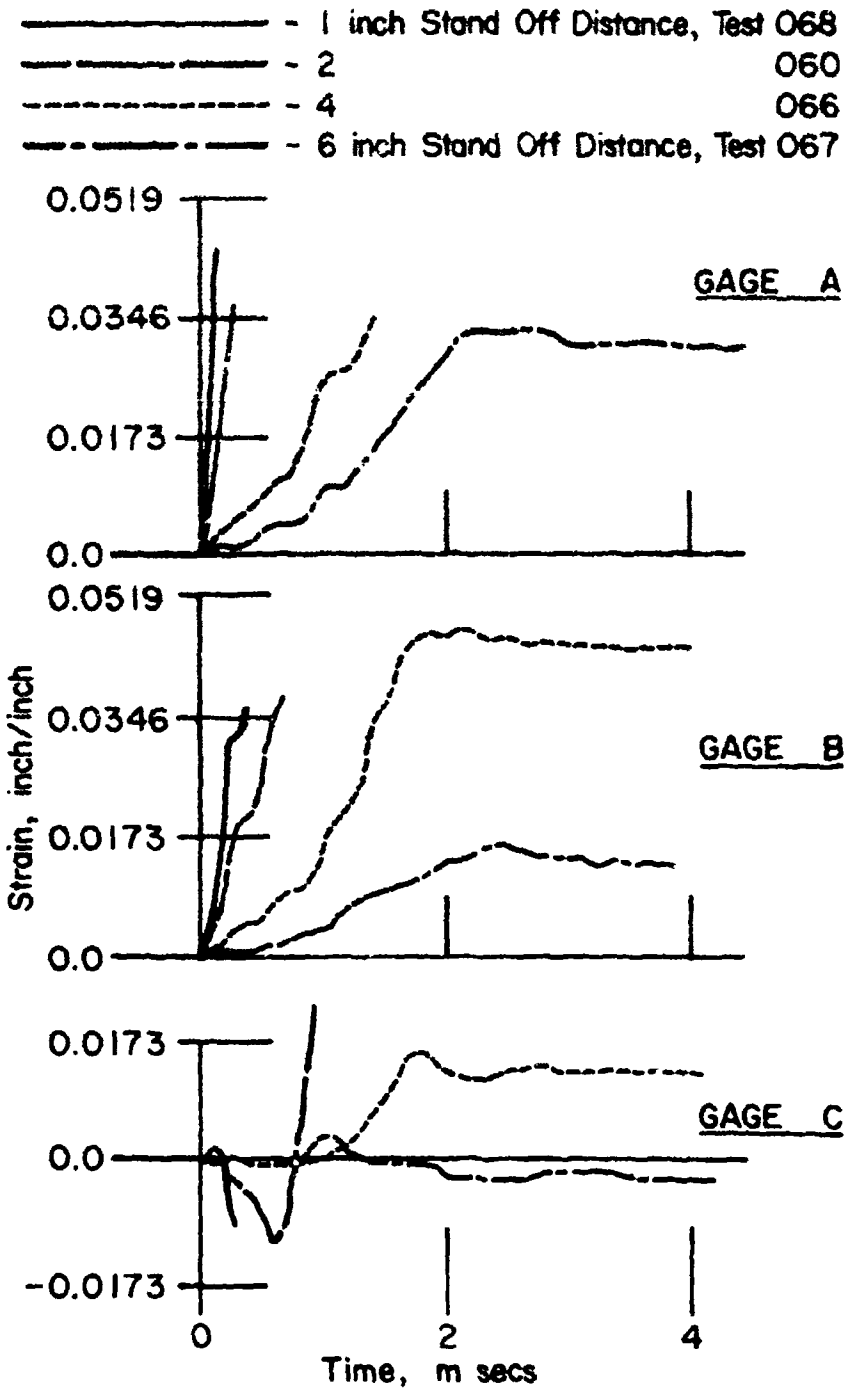

Fig. 1 Strain Time Histories for Three Gage Locations Showing the Effect of Various Stand-off Distances

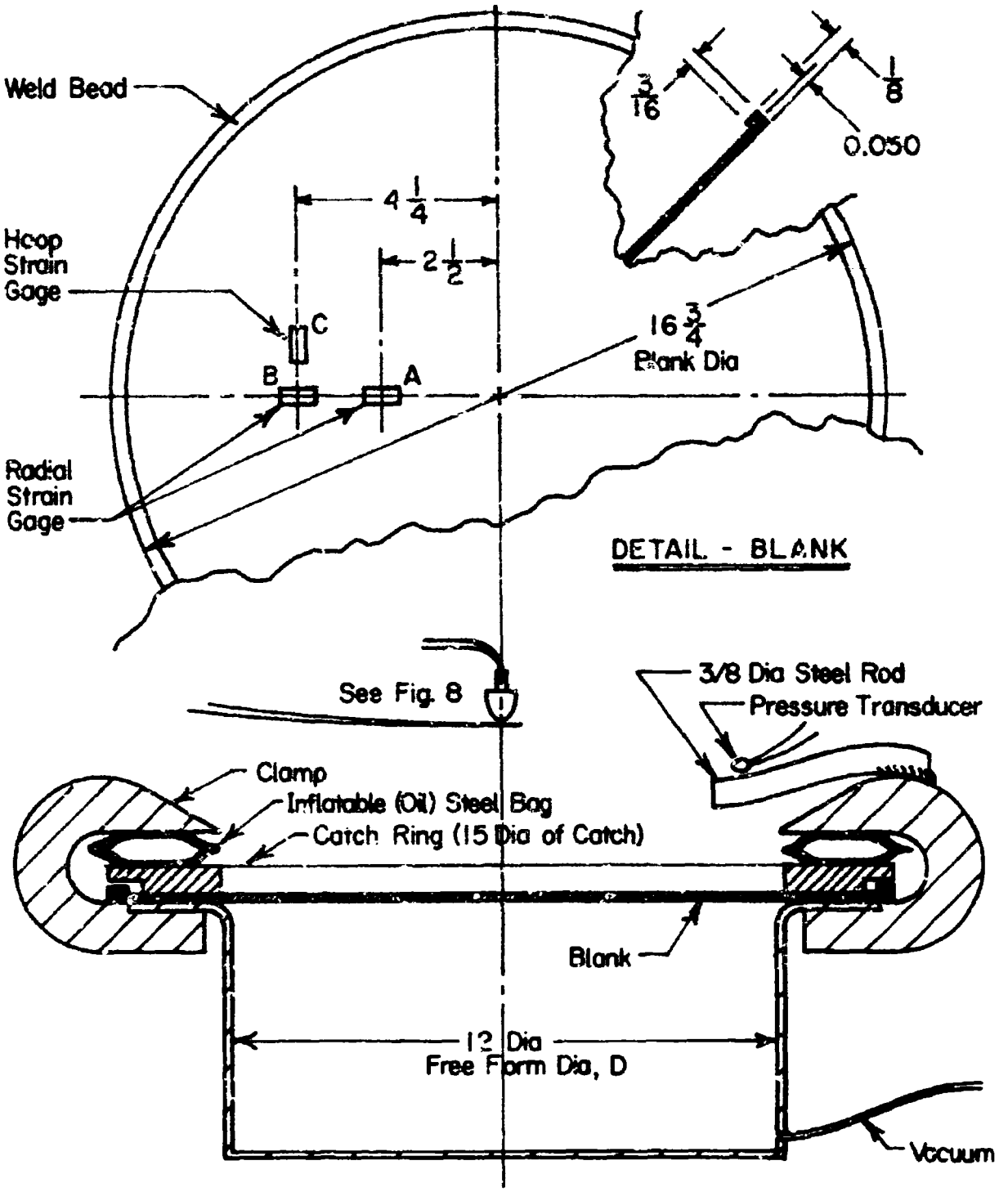

Fig. 2 Schematic of Die and Clamp Set-up

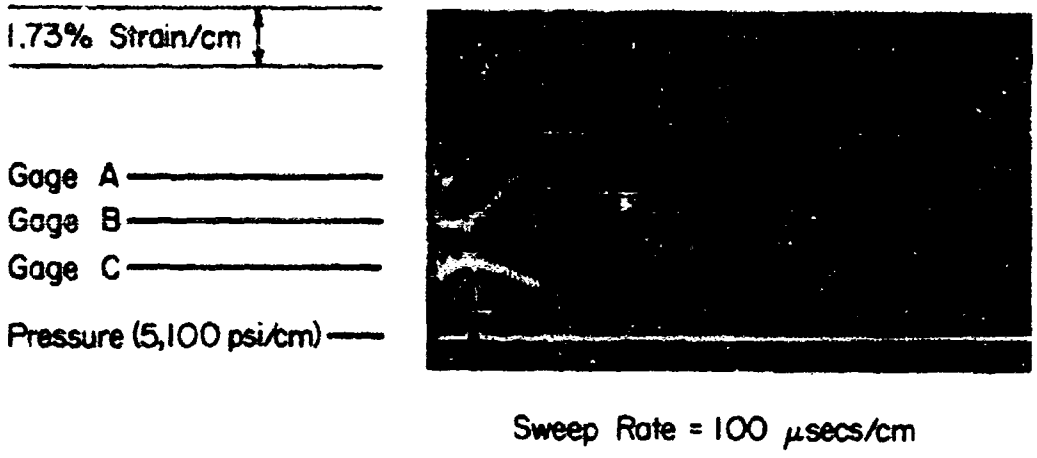

Fig. 3a Oscilloscope Trace of Test No. 068.
Stand-off Distance was 1 Inch

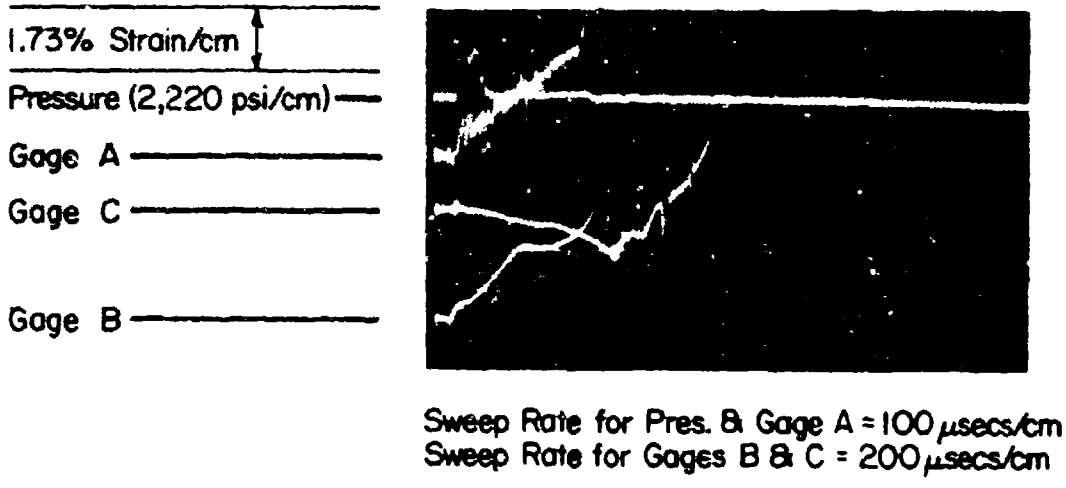

Fig. 3b Oscilloscope Trace of Test No. 060.
Stand-off Distance was 2 Inches

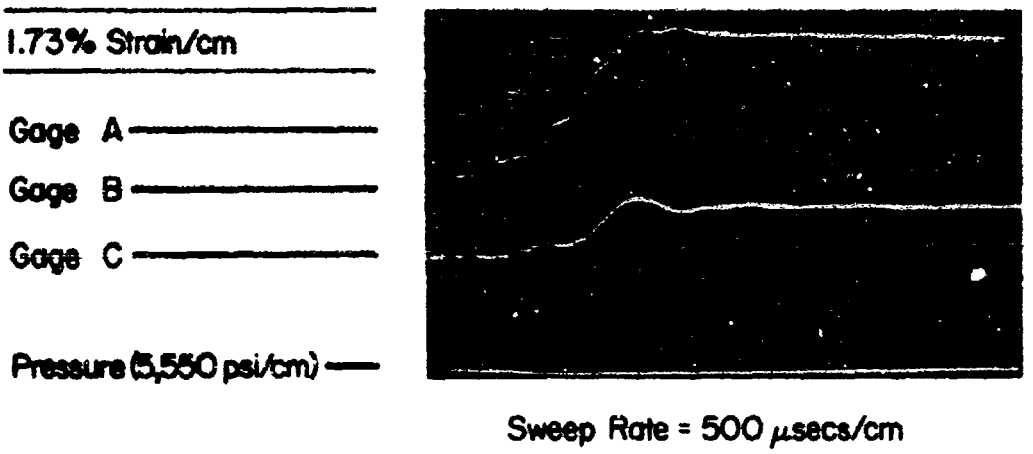

Fig. 3c Oscilloscope Trace of Test No. 066.
Stand-off Distance was 4 Inches

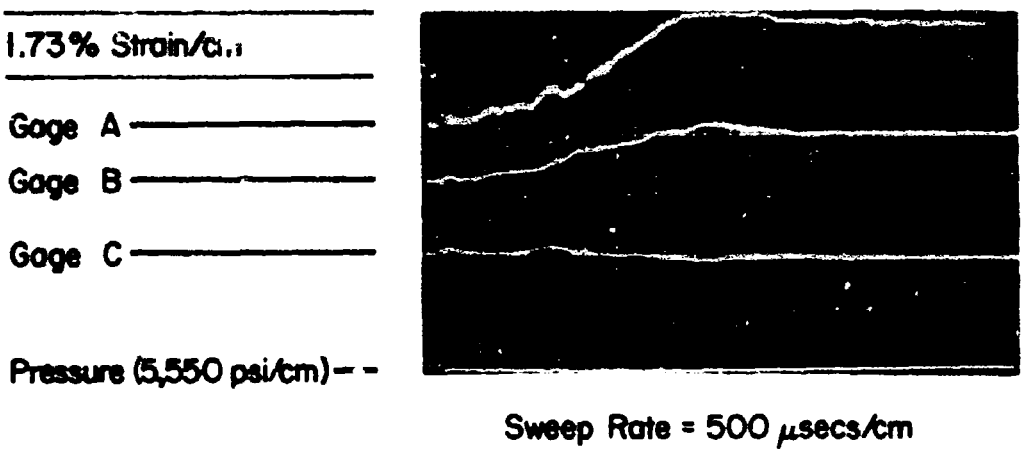

Fig. 3d Oscilloscope Trace of Test No. 067.
Stand-off Distance was 6 Inches

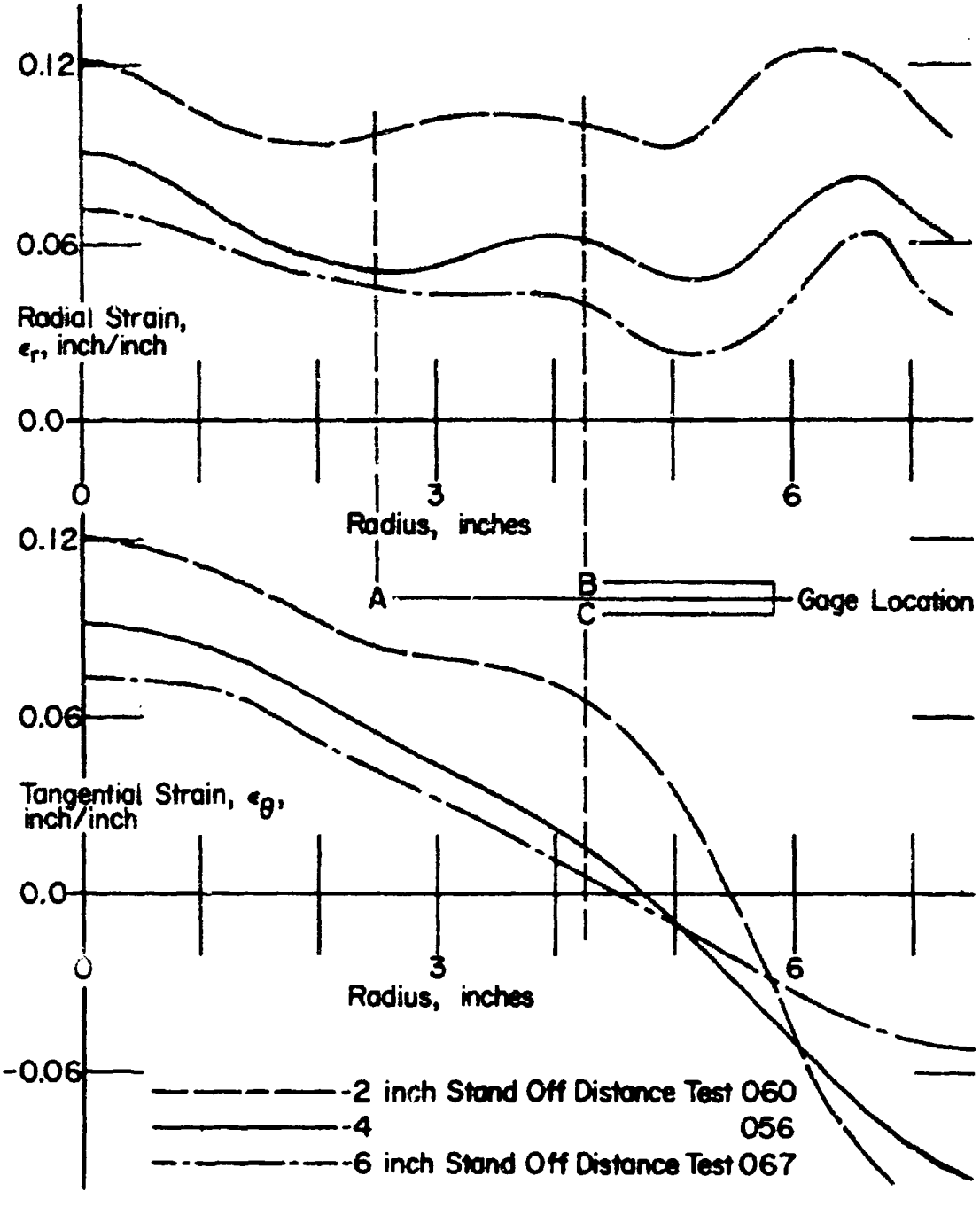

Fig. 4 The Final Strains as a Function of Undeformed Radial Distance

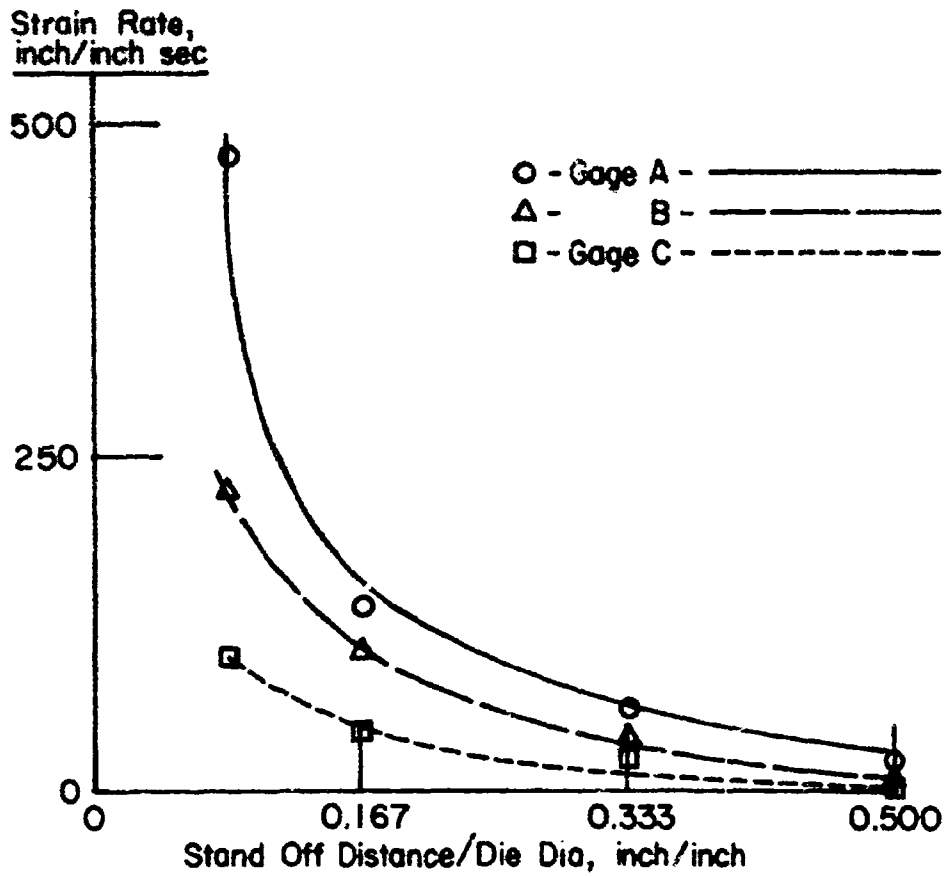

Fig. 5 Strain Rate Plotted as a Function of Stand-off Distance

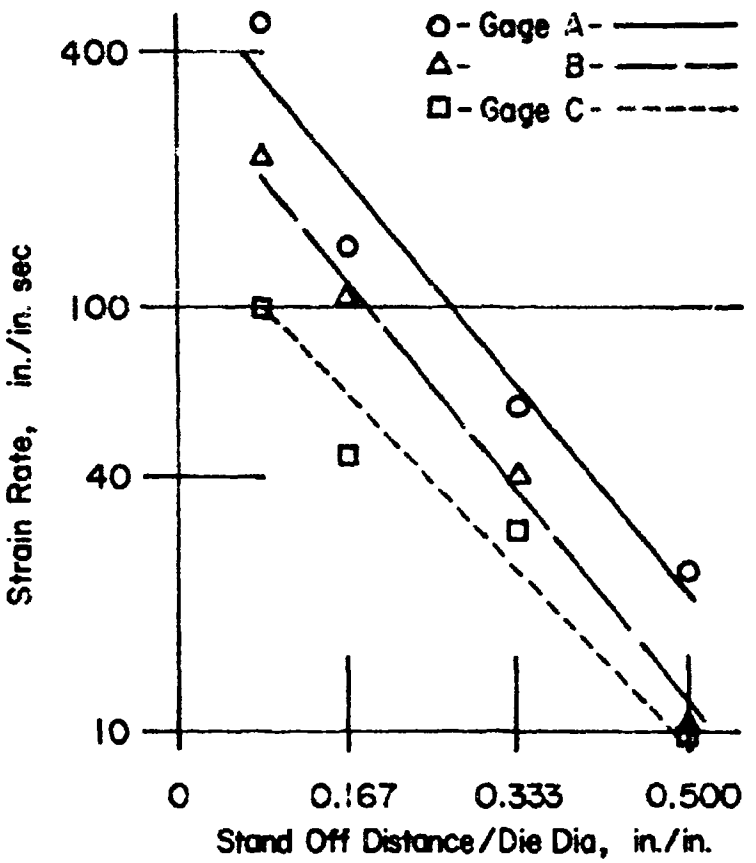

Fig. 6 Strain Rate Plotted as a Function of the Log of Stand-off Distance

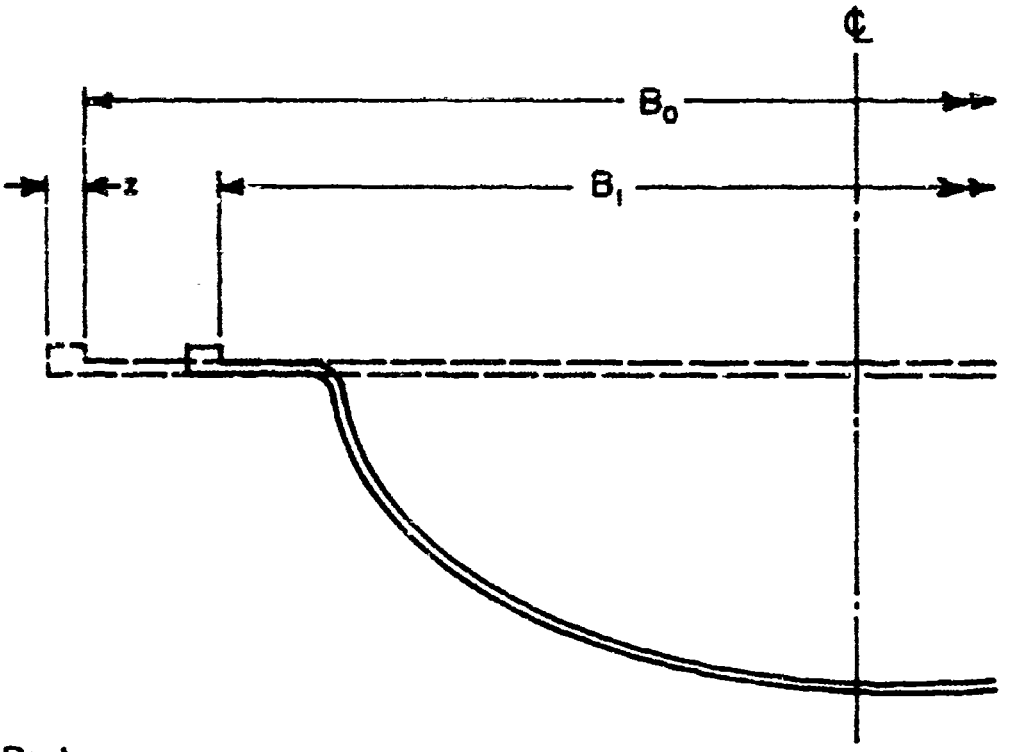

Part Test №	B_0	B_1	z	ϵ_θ @ B_0
056	16.30	15.00	0.23	1.30/16.30 = -0.080
058	16.18	15.10	0.30	1.08/16.18 = -0.067
060	16.36	15.02	0.19	1.34/16.36 = -0.082
066	16.30	15.40	0.25	0.90/16.30 = -0.055
067	16.25	15.50	0.24	0.75/16.25 = -0.046

Fig. 7 Tabulated Data Showing Degree of Outside Diameter Pull-in

rates will be lower on large parts for a given L/D ratio because the scaling laws predict equal blank velocities and therefore lower strain rates.

The pressure- time history was measured during each shot by a transducer at the same fixed distance from the charge. The pressure trace at a constant weight of charge proved to be repeatable from test to test. The shock wave traveled at a velocity of Mach 1. The peak pressures from the charge of Composition A-3 proved comparable to the empirical values predicted in the literature for Pentolite.

B. General Test Set-up

The blanks to be formed were 2014-0 aluminum, .050 inches thick, with a bead welded along its outside diameter. The outside diameter of the blank was nominally 16 3/4 inches. The nominal dimensions of the weld bead are shown in Fig. 2.

A general schematic of the blank clamped to the die can also be seen in Fig. 2. The clamping force upon the blank was applied with hydraulic pressure contained within an inflatable steel bag. This provided uniform clamping pressure against wrinkling all around the blank and was set at 200 psig for all of the tests. A catch ring was used to engage the weld bead during forming to control outside diameter pull-in. A vacuum was drawn within the die cavity and the test was conducted underwater.

The explosive charge was Composition A-3, hemi-spherically shaped and weighting 60 grains. The charge was placed in the center of the blank at the various stand-off distances of 1, 2, 4, and 6 inches and detonated with a Dupont No. 8 blasting cap, which is equivalent to 6.9 grains of PETN.

A 3/8 inch steel rod was extended from the clamp to the middle area of the blank with a pressure transducer mounted to it. The transducer was located between the charge and the rod. Water flow around the rod provides some protection to the piezoelectric pressure transducer by diverting shrapnel from the blasting cap. This resulted in longer life for the pressure transducer without affecting the pressure amplitude.

C. Instrumentation System

The test data was recorded on Polaroid Film using a Tektronix Type 555 Dual Beam Oscilloscope with a Dumont Oscilloscope camera. Four channels were available by using CA type amplifiers in a chopped mode. Various sweep rates were tried to determine the coverage of the pressure and strain time event with good resolution. A previously established procedure was followed and consisted of the following:

1. With the scope beams off, record the screen grid on film;

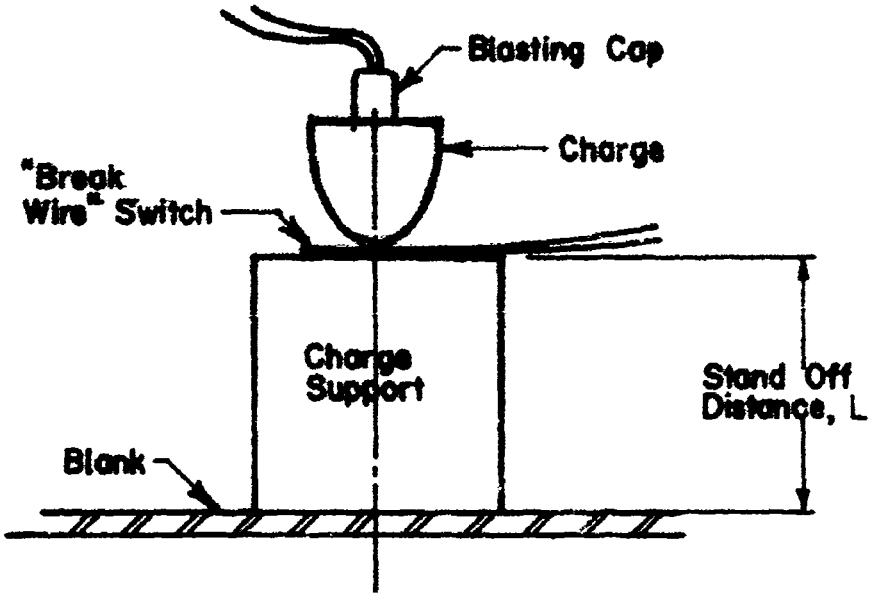

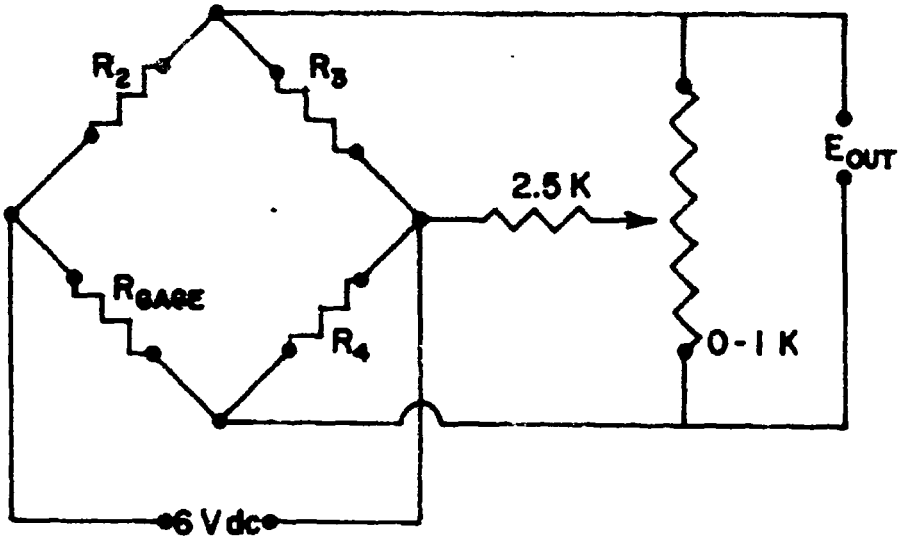

Fig. 9 Strain Gage Bridge Circuit

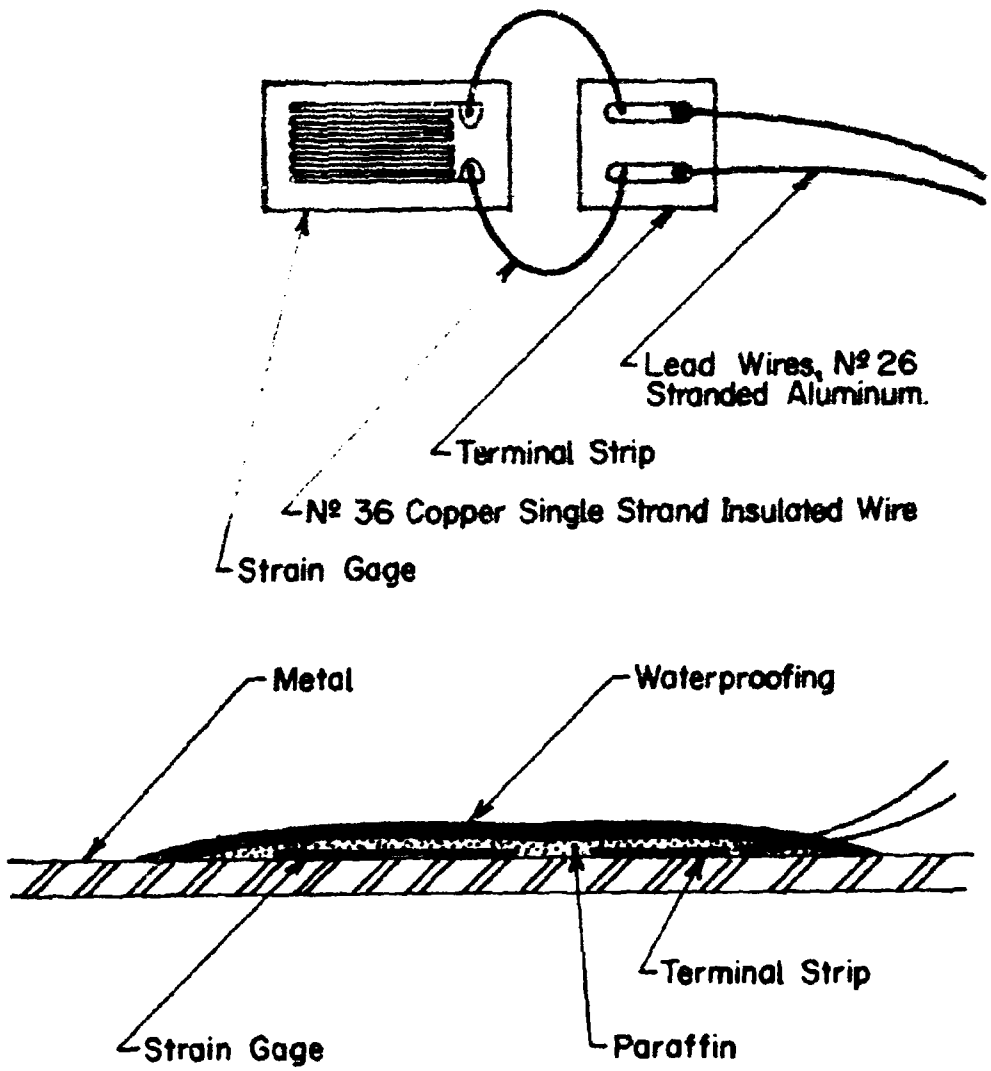

Fig. 10 Strain Gage Installation

2. Set the camera on time, the scope sweep controls on single sweep and external trigger, then open the camera shutter; and,

3. Detonate the charge and close the camera shutter.

The oscilloscope trigger signal was the output of a Wheatstone bridge, excited by a 6 volt battery and originally balanced to 0 volts output. A continuity wire from one bridge leg passed directly beneath the explosive charge as shown in Fig. 8. The blast from the charge broke the wire, produced an instantaneous 2.8 volt bridge output, and triggered the beams of the oscilloscope. Previously, a "strain gage switch" was used to provide the trigger signal. These tests showed both the "strain gage switch" and the "break wire switch" gave an adequate, repeatable, trigger signal to the oscilloscope. The wire is obviously more inexpensive.

Some early tests resulted in the scope beam sweeping much before the time of the pressure or strain event. The trouble was found to be caused by electro-magnetic radiation produced by the Dupont Blasting Machine which was used to detonate the blasting cap. A 6 volt battery was substituted and the problem of an early trigger signal was eliminated.

At times the electrical noise in the system was at high levels. Much of the noise was eliminated by shutting off all induction machinery prior to testing and by tying electrical ground of the water pool with the instrumentation ground. The strain was measured as the output of the strain gage bridge circuit shown in Fig. 9. The excitation voltage was supplied by a 6 volt battery. The three resistor legs of the bridge are strain gages all measuring 120 ohms. All bridges were calibrated for strain by substituting known resistors for the gage.

D. Strain Gage Evaluation

Two strain gages measured radial strain; one at $2\frac{1}{2}$ inches from the blank center and the other at $4\frac{1}{4}$ inches. The other strain gage measured hoop strain at $4\frac{1}{4}$ inches from the blank center. A continued evaluation of strain gages and adhesives has resulted in a preference for gages manufactured by William Bean Company. These gages are made of annealed constantan upon a polyimide backing. The polyimide backing is a strong material. Post test examination has not found the backing or the gage to craze as have some other gages. Failure of these strain gages has been isolated to the adhesive bond and to the single strand lead wire connecting the gage to the terminal strip shown in Fig.10. Microscopic examination of the bonded areas showed separation between the aluminum blank and the cement. While careful metal surface preparation was done prior to applying the gages, the analysis shows that a more elaborate procedure may be needed in this area.

E. Results of Measurement

The actual film data is shown in Fig. 3 for four tests; one for each of the selected stand-off distances. The strain scales are the same for each test. The sweep rates are not the same in order to provide better resolution for the event and to allow for marginal unknown of the total forming time. The forming plus the relaxation time on some tests was as long as 3 milli-seconds. The broken line of the trace was caused by the chopping of the beam on its horizontal sweep. Some strain histories showed a strain reversal by first measuring compressive strain and latter in time a tensile strain. Strain reversal was particularly true for gage C measuring hoop strain, but could also be seen at gage A for the closer stand-off distances.

Final part contours are shown in Fig. 11. The closer stand-off produces more work on the blank for a constant charge weight.

2. Numerical Solution for Deformation and Instability in the Hydrostatic Bulge Test

Principal Investigator: R. Harris

This is a progress report on a master's thesis at the University of Denver. This work by R. Harris has been partially supported by the contract.

Initial results have been obtained from the computer program for predicting strains and displacements in a hydrostatically bulged circular plate specimen. The Tenth Quarterly Report of the Center contains a description of the theory and governing equations. Fig. 12 and 13 show the computed displacements as a function of pressure on annealed copper.

The figures also compare the experimental data and calculations reported by Weil and Newmark*. At present work is continuing to determine the instability strain at the apex. Weil and Newmark reported experimental instability strains of .430 and .323 while their last converged solution is at $\epsilon = .215$. Their extrapolated instability strain was .308. The present computer solution has converged at a strain of .41. A charge of variable must be programmed before the final instability strain at maximum pressure can be calculated.

---

* N. Weil and N. Newmark, "Large Plastic Deformation of Circular Membranes," Journal of Applied Mechanics, Vol. 22, p 533, December 1955

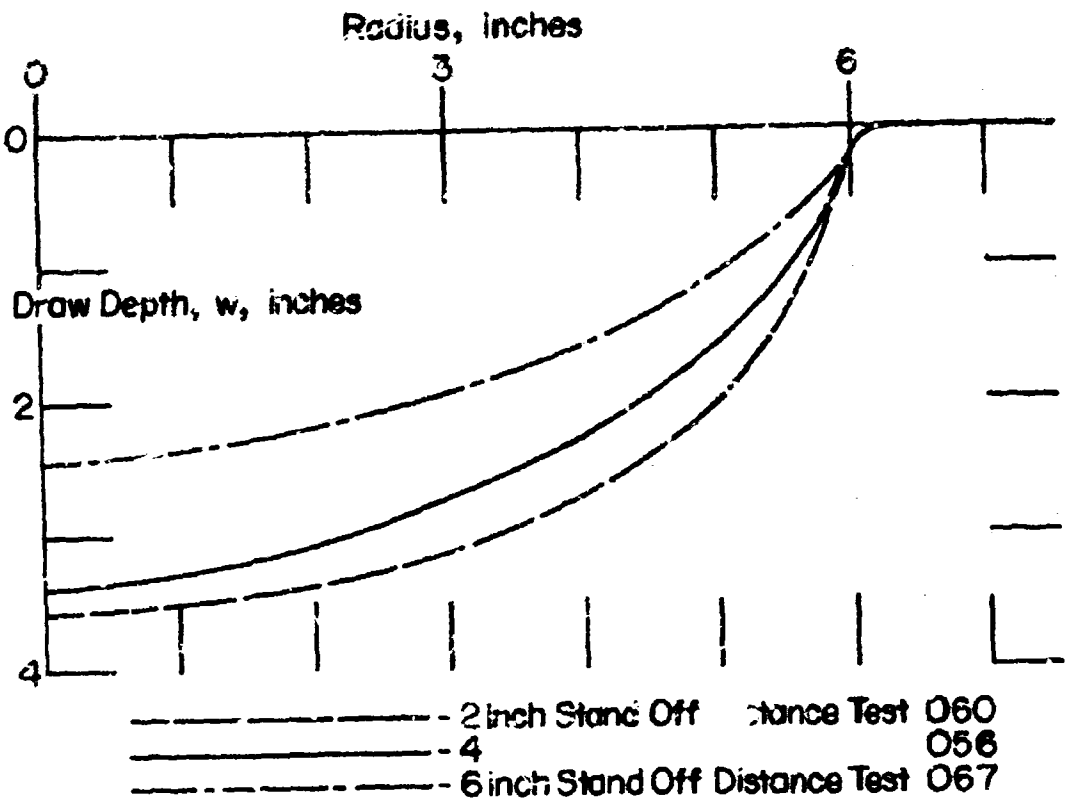

Fig. 11 Plot of Draw Depth as a Function of Blank Radius

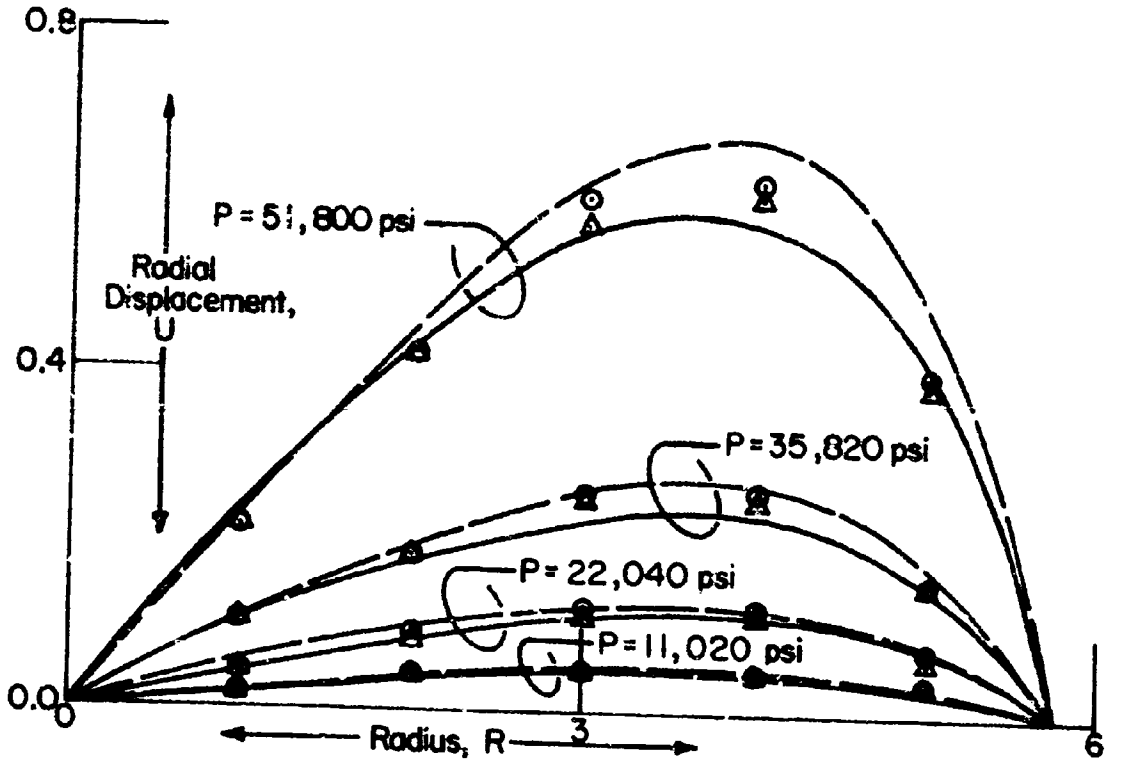

Fig. 12 Radial Displacements as a Function of Radius

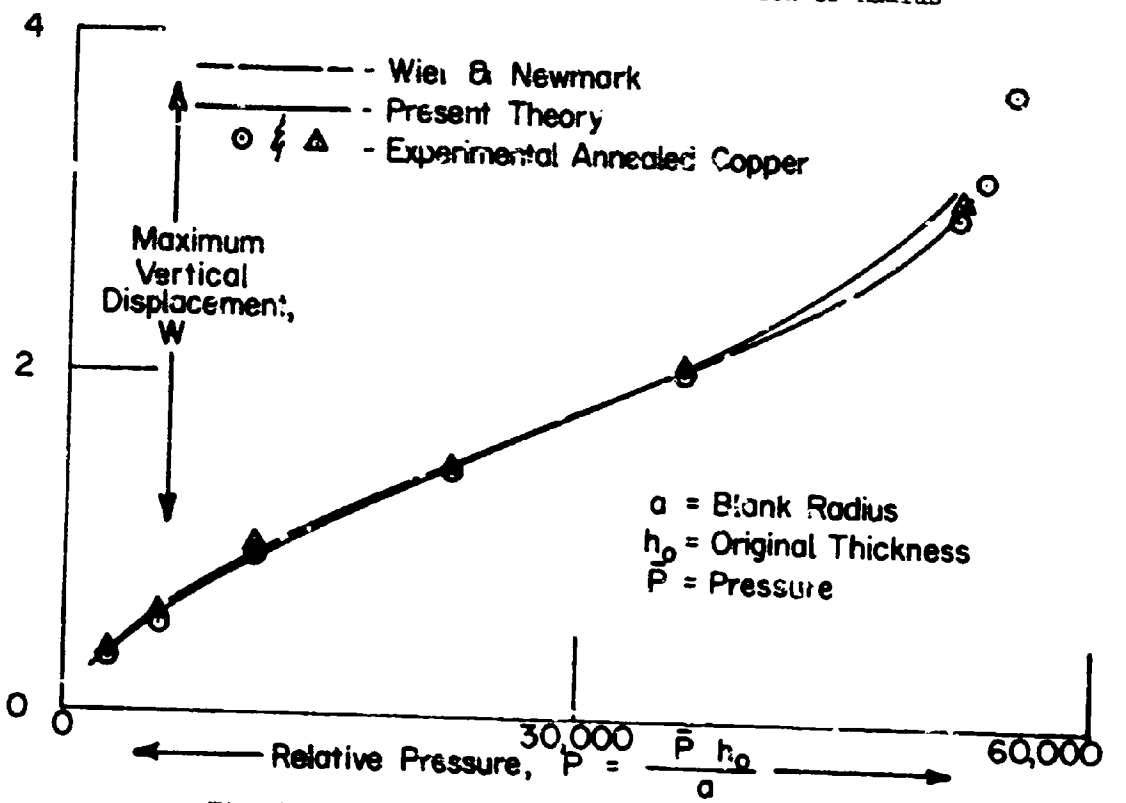

Fig. 13 Polar Displacement as a Function of Radius

W. Johnson** and R. Hill*** give

$$\epsilon = \frac{m - .5}{2} = \frac{.365 + .5}{2}\,\frac{8}{11} = .432,$$

$$\epsilon = \frac{8}{11}\left(\frac{m + .5}{2}\right) = \left(\frac{.365 + .5}{2}\right)\frac{8}{11} = .314$$

respectively as their instability strains with m being the strain hardening exponent.

** W. Johnson, J. L. Duncan, C. Kormi, R. Sowerby, and F. W. Travis, "Some Contributions to High Rate Sheet Metal Forming." Proceedings of the 4th International M.T.D.R. Conference, Pergamon Press, Oxford and New York, 1963.

*** R. Hill, "A Theory of the Plastic Bulging of a Metal Diaphram by Lateral Pressure." Phil. Mag., Vol. 41, No. 1133, p 1133-1142, 1950.

II. UNIVERSITY OF DENVER

1. Technology Transfer

Principal Investigator: A. A. Ezra

All the corrected versions of the papers presented at the First International Conference of the Center for High Energy Forming are in the hands of the Publications Department. The Proceedings will be mailed to conference attendees during the first week of July, 1968.

The Second International Conference of the Center for High Energy Forming is planned for June 23-27, 1969, and will be held at the Stanley Hotel, Estes Park, Colorado. Papers are invited for the following sessions:

A. Explosive Forming
B. Explosive Welding
C. Electro-Hydraulic Forming
D. Electro-Magnetic or Magneto-Motive Forming
E. Explosive Gas Forming
F. The Effect of High Energy Rate Forming on Material Properties
G. The Mechanics of High Energy Rate Forming

Extended abstracts are due October 1, 1968. After being notified of paper acceptance, the manuscript is due February 1, 1969. This will permit the published Proceedings to be available at the Conference.

Professor Ezra is giving a course in High Energy Mechanics during the Spring Quarter at the University of Denver. The results of research programs of the Center will be presented as part of the course.

A special report on Shock Hardening of Metals has been completed. It will be published and made available after August 1, 1968. Another special report on the Mechanics of Energy Transfer in Explosive Forming has also been completed and will be made available after August 1, 1968. A report on the shock twinning behavior of molybdenum is in preparation.

2. Mechanics of Energy Transfer and High Velocity Metal Deformation

Principal Investigator: John A. Weese
Graduate Students: Michael Malcolm, Larry Ching

Computer programs for the reduction of data from the experiments to determine underwater explosion constants for pentolite have been written and preliminary results obtained. The programs are now being refined and an investigation is underway to correlate the results with those obtained earlier by other investigators. Methods for predicting the final deformation of explosively formed rings have been modified and improved. Computer programs have been written for utilizing

strain gage readings taken while boring out an explosively bulged thickwalled tube to determine its state of residual stress. Associated with this, an analytical study is being conducted on the response of cylindrical dies to explosive loading.

3. Electromagnetic Forming

Principal Investigator: W. N. Lawrence
Graduate Student: L. Gilbert

During the first quarter of 1968, the mechanical assembly of one half of the capacitor bank facility was completed. Each component of the bank has been tested for high voltage integrity ('hi-pot' tested) to 30,000 volts, which is 50% above the capacitor rating of 20,000 volts. Corona has been held to a minimum through careful design of connections. All ignitrons have been individually tested. In addition, several magnetic forming coils have been constructed and one was used in the assembly of the bank to install the ignitron in the ignitron shielding container. Some effort was put into developing a theoretical basis for the energy transfer and design limitations of the forming coil. In addition, the Center was contacted concerning the feasibility of swaging rotating bands on large artillery shells by magnetic forming and a small scale test evaluation was made for the Naval Ordnance Test Station at Louisville, Kentucky.

4. Strain Rate Effects

Principal Investigator: C. Hoggatt

During this report period curve fitting techniques were re-evaluated to facilitate reduction of the displacement-time data of freely expanding rings into dynamic stress-strain rate relationships. Early in this investigation it was found that all of the displacement-time histories of the expanding ring tests obeyed parabolic relationships out to approximately 10% strain which is the maximum strain achieved to date. Maximum deviation of the recorded data from parabolic behavior was normally around 0.0005 inches at any position on the curve. This held true for all three materials tested to date, 6061-T6 aluminum, 1010 mild steel and 6Al-4V-titanium. It should be noted that these materials represent three different crystal structures (face centered cubic, body centered cubic and hexagonal close packed respectively); three ranges of material density ($.25 \times 10^{-3}$, $.733 \times 10^{-3}$ and $.414 \times 10^{-3}$ lb-sec^2/in^4 respectively); and three ranges of dynamic material strength (45, 100 and 230 ksi respectively.) In addition, 6061-T6 aluminum exhibits no appreciable increase in dynamic flow stress over static behavior while the other two materials exhibit significant increases in the flow stress over static values. However, even with such a wide variance of conditions all investigations to date indicate that the parabolic relation for displacement-time behavior holds for all materials tested, and that the dynamic stress-strain rate behavior obtained from initial tests for these materials agrees very well with dynamic relationships published by Maiden (1). A few additional tests are required to fill in existing gaps in the data to finalize the dynamic relationships for these three materials. Therefore, complete stress-strain strain rate relationships will be presented

in the next quarterly report.

It is presently anticipated that the dynamic uniaxial behavior of 2014 and 2024 aluminum alloys will also be determined during the next report period.

5. Comparison of Terminal Properties of Explosively and Conventionally Formed Aluminum Alloy 2014

Principal Investigators: H. Otto and N. Orava
Graduate Students: R. Mikesell, D. Olsen, S. Shen

For this program, free formed configurations were selected to eliminate the parameter of die contact. A shock situation does occur upon die contact with explosively formed material which could influence any comparison. Twelve inch domes of both annealed (O) and solution heat treated and artificially aged (T6) stock of 2014 were both explosively and rubber press formed. The die configuration was exactly the same in both instances. Prior to forming, the blanks were gridded with photo-resist so the strain could be determined at any point after forming.

Strain measurements after forming were conducted so fatigue and stress corrosion specimens with comparable strains could be cut from the domes formed by both methods. Although the radius of curvature is a problem in specimen selection, there are relatively flat portions in the dome with comparable strains from dome to dome. The fatigue specimens were cut so these portions corresponded to the gage length (1.2 inches) of the tensile fatigue specimens. The gripping surfaces were flattened so as not to disturb the metal through the gage length. The specimens are electropolished after machining to remove any surface imperfections that could act as stress raisers during testing. Properties of explosively and conventionally formed materials will be measured both after forming and after heat treatment.

The fatigue tests are being conducted at a rate of 15 cps. Cyclic tensile-tensile loads are being established so failures will occur in the as-received stock at 2×10^6 cycles or less. Since the fatigue properties are to be comparative based on the type of forming, it is not appropriate to establish a conventional fatigue stress at this time.

Stress corrosion specimens measuring 1/2 x 2-1/4 inches were taken from several areas of the domes. The curvature of these specimens does not hinder testing. Specimens with comparable residual strains were again selected from domes formed by both methods. These specimens are being tested in 3.5% NaCl solution under continuous immersion. Tests are being conducted in both the as-formed and at a stress of 75% of the "as-received" yield strength. The stressed specimens are held in a 3 point loading test fixture with a 1.7 inch span. No cracks have been observed in the explosively formed 2014-O after 15 days exposure.

In addition to continuous immersion tests, intermittent immersion will also be used. Facilities are being adapted for the intermittent tests.

Mr. Mikesell has been concerned with the modification of the TM-6 Marquardt Universal Testing Machine for adaptation to fatigue testings. By using a sine wave generator, an alternating load can be applied. Actual calibration requires the use of an oscilloscope so the amplitude can be adjusted correctly.

Mr. Olsen has successfully prepared electron micrographs of 2014-O and 2024-O aluminum alloys. Studies with the 2014-O will be used to develop heat treatment schedules for this material for the comparative studies of explosive and rubber press formed specimens.

Mr. Shen has been concerned with stored energy studies and the determination of strain in the domes. For the former, a tin-solution calorimeter has been used to measure the stored energy in cold-worked copper. Copper was selected for this feasibility study, since the amount of stored energy as a function of cold work is relatively high. Owing to the lack of sensitivity and capacity of the calorimeter, it was not possible to detect the stored energy in the copper, even though it was severely cold worked.

6. Shock-Twinning Behavior of Molybdenum

Principal Investigator: Dr. S. Mahajan

It was indicated in the previous Quarterly Report that as-received molybdenum strips would be annealed to obtain coarse grained samples. This treatment would have increased the frequency of shock-twinning, as observed on the macroscopic scale. However, the attempts to produce coarse grained molybdenum were not successful because of the embrittlement problems. For example, the samples annealed at 1500°C for 1 and 4 hours in vacuum could be broken by pressing them between finger nails.

A technique has been developed for preparing thin foils from molybdenum strips. The samples are first chemically thinned in a solution containing HF and HNO_3 acids. Chemically thinning operation is followed by electropolishing in an electrolyte containing 25cc of H_2SO_4 and 75cc of C_2H_5OH. Sections suitable for transmission electron microscopy are cut from the thin areas.

As-received, as-received + shocked, and 6% prestrain + shocked samples of the fine grain stock were examined by transmission electron microscopy; the shock pressure used was 90 kbars. Following are the tentative conclusions:

A. Markings resembling twins have been observed in as-received-shocked samples; no such markings have been observed in the pre-strained-shocked samples. No definite conclusion can be drawn about these markings until the diffraction patterns have been analyzed.

B. Dislocation densities in as-received-shocked and 6% prestrained-shocked samples are almost identical, implying that initial mobile dislocation density does not have much effect on the dislocation density observed after shocking.

C. In the shocked material, dislocations are distributed uniformly throughout the matrix; there was no indication of cell formation. Dislocations, however, are highly cusped and jogged. A few dislocations loops are also observed.

7. Properties of Explosively Formed AISI Steels 4130, 4140, and 4340

Principal Investigator: H. Otto
Graduate Student: R. Mikesell

A flat bottom die is currently being constructed for this phase of the work. A combination holddown ring and blank clamping fixture has been completed. The die is designed to accommodate steel with either high or low ductility. Steels have been ordered for this phase and should be available when the die is completed. Fatigue and fracture toughness tests will be conducted on the steel in the "as-formed" and "as-formed and heat treated" conditions.

8. Explosive Welding

Principal Investigator: S. E. Carpenter
Graduate Students: A. Paddock, D. Olsen

During the last quarter numerous explosive welds of various material combinations and geometries were made at the request of parties and organizations interested in the explosive welding process. A weld for the NASA-Lewis Laboratory was particularly interesting. Iron and tantalum foils were explosively welded to a tungsten-25% rhenium alloy giving satisfactory bonding on the first attempt. The welding of Ti-6Al-4V has led to a spin off contract from the Boeing Company.

Current work is now being directed toward a better metallurgical understanding and characterization of the weld interface. Mr. A. Paddock is studying Cu-Ag welds following various heat treatments using the electron microprobe. With this study Mr. Paddock hopes to determine any anomalies in composition and also study diffusion processes in and along the interface. Mr. Olsen hopes to study the weld interface by means of a transmission electron microscopy. This study has moved slowly due to the difficult polishing procedures necessary to isolate the weld interface. He is currently building a jet polisher which will greatly expedite the polishing process.

Unclassified

Security Classification

DOCUMENT CONTROL DATA - R&D

(Security classification of title, body of abstract and indexing annotation must be entered when the overall report is classified)

1. ORIGINATING ACTIVITY (Corporate author) Martin Marietta Corporation Denver Division Denver, Colorado University of Denver Denver, Colorado	2a. REPORT SECURITY CLASSIFICATION Unclassified 2b. GROUP N/A

3. REPORT TITLE

Center for High Energy Forming

4. DESCRIPTIVE NOTES (Type of report and inclusive dates)

Eleventh Quarterly Report of Technical Progress - April 1, 1968

5. AUTHOR(S) (Last name, first name, initial)

Mote, J. D.

6. REPORT DATE April 1, 1968	7a. TOTAL NO. OF PAGES	7b. NO. OF REFS
8a. CONTRACT OR GRANT NO. b. PROJECT NO. c. d.	9a. ORIGINATOR'S REPORT NUMBER(S) AMRA CR 66-05/13 9b. OTHER REPORT NO(S) (Any other numbers that may be assigned this report)	

10. AVAILABILITY/LIMITATION NOTICES

Distribution of this document is unlimited.

11. SUPPLEMENTARY NOTES	12. SPONSORING MILITARY ACTIVITY Army Materials and Mechanics Research Center Watertown, Massachusetts 02172

13. ABSTRACT

Strain gage data showing strain- and pressure-time histories versus charge stand-off during explosive deformation is given. The results show a decrease in strain rate with an increase in stand-off at constant charge weight.

Recent results of a numerical solution for deformation and instability in the hydrostatic bulge test are presented.

Summary information is presented for technology transfer; mechanics of energy transfer and high velocity metal deformation; electromagnetic forming; strain rate effects; the effect of explosive forming on the terminal properties of materials, and explosive welding.

DD FORM 1 JAN 64 1473

Unclassified

Security Classification

Unclassified

Security Classification

14 KEY WORDS	LINK A ROLE	LINK A WT	LINK B ROLE	LINK B WT	LINK C ROLE	LINK C WT
Energy Requirements						
Energy Transfer						
Ductility						
Die Design						
Strain Rate Effects						

INSTRUCTIONS

1. ORIGINATING ACTIVITY: Enter the name and address of the contractor, subcontractor, grantee, Department of Defense activity or other organization *(corporate author)* issuing the report.

2a. REPORT SECURITY CLASSIFICATION: Enter the overall security classification of the report. Indicate whether "Restricted Data" is included. Marking is to be in accordance with appropriate security regulations.

2b. GROUP: Automatic downgrading is specified in DoD Directive 5200.10 and Armed Forces Industrial Manual. Enter the group number. Also, when applicable, show that optional markings have been used for Group 3 and Group 4 as authorized.

3. REPORT TITLE: Enter the complete report title in all capital letters. Titles in all cases should be unclassified. If a meaningful title cannot be selected without classification, show title classification in all capitals in parenthesis immediately following the title.

4. DESCRIPTIVE NOTES: If appropriate, enter the type of report, e.g., interim, progress, summary, annual, or final. Give the inclusive dates when a specific reporting period is covered.

5. AUTHOR(S): Enter the name(s) of author(s) as shown on or in the report. Enter last name, first name, middle initial. If military, show rank and branch of service. The name of the principal author is an absolute minimum requirement.

6. REPORT DATE: Enter the date of the report as day, month, year, or month, year. If more than one date appears on the report, use date of publication.

7a. TOTAL NUMBER OF PAGES: The total page count should follow normal pagination procedures, i.e., enter the number of pages containing information.

7b. NUMBER OF REFERENCES: Enter the total number of references cited in the report.

8a. CONTRACT OR GRANT NUMBER: If appropriate, enter the applicable number of the contract or grant under which the report was written.

8b, 8c, & 8d. PROJECT NUMBER: Enter the appropriate military department identification, such as project number, subproject number, system numbers, task number, etc.

9a. ORIGINATOR'S REPORT NUMBER(S): Enter the official report number by which the document will be identified and controlled by the originating activity. This number must be unique to this report.

9b. OTHER REPORT NUMBER(S): If the report has been assigned any other report numbers *(either by the originator or by the sponsor)*, also enter this number(s).

10. AVAILABILITY/LIMITATION NOTICES: Enter any limitations on further dissemination of the report, other than those imposed by security classification, using standard statements such as:

(1) "Qualified requesters may obtain copies of this report from DDC."

(2) "Foreign announcement and dissemination of this report by DDC is not authorized."

(3) "U. S. Government agencies may obtain copies of this report directly from DDC. Other qualified DDC users shall request through _____."

(4) "U. S. military agencies may obtain copies of this report directly from DDC. Other qualified users shall request through _____."

(5) "All distribution of this report is controlled. Qualified DDC users shall request through _____."

If the report has been furnished to the Office of Technical Services, Department of Commerce, for sale to the public, indicate this fact and enter the price, if known.

11. SUPPLEMENTARY NOTES: Use for additional explanatory notes.

12. SPONSORING MILITARY ACTIVITY: Enter the name of the departmental project office or laboratory sponsoring *(paying for)* the research and development. Include address.

13. ABSTRACT: Enter an abstract giving a brief and factual summary of the document indicative of the report, even though it may also appear elsewhere in the body of the technical report. If additional space is required, a continuation sheet shall be attached.

It is highly desirable that the abstract of classified reports be unclassified. Each paragraph of the abstract shall end with an indication of the military security classification of the information in the paragraph, represented as *(TS)*, *(S)*, *(C)*, or *(U)*.

There is no limitation on the length of the abstract. However, the suggested length is from 150 to 225 words.

14. KEY WORDS: Key words are technically meaningful terms or short phrases that characterize a report and may be used as index entries for cataloging the report. Key words must be selected so that no security classification is required. Identifiers, such as equipment model designation, trade name, military project code name, geographic location, may be used as key words but will be followed by an indication of technical context. The assignment of links, rules, and weights is optional.

Unclassified

Security Classification