ESD-TR-68-8
ESTI FILE COPY

ESD-TR-68-8

ESD RECORD COPY
RETURN TO
SCIENTIFIC & TECHNICAL INFORMATION DIVISION
(ESTI), BUILDING 1211

ESD ACCESSION LIST
ESTI Call No. [redacted] 59992
Copy No. 1 of 1 cys.

Technical Note

TN 1968-7

D. G. Stuart

Haystack Antenna Reflector Surface Improvement Program

29 January 1968

Prepared under Electronic Systems Division Contract AF 19(628)-5167 by

Lincoln Laboratory
MASSACHUSETTS INSTITUTE OF TECHNOLOGY
Lexington, Massachusetts

AD0680575

The work reported in this document was performed at Lincoln Laboratory, a center for research operated by Massachusetts Institute of Technology, with the support of the U.S. Air Force under Contract AF 19(628)-5167.

This report may be reproduced to satisfy needs of U.S. Government agencies.

This document has been approved for public release and sale; its distribution is unlimited.

MASSACHUSETTS INSTITUTE OF TECHNOLOGY
LINCOLN LABORATORY

HAYSTACK ANTENNA
REFLECTOR SURFACE IMPROVEMENT PROGRAM

D. G. STUART

Group 76

TECHNICAL NOTE 1968-7

29 JANUARY 1968

LEXINGTON MASSACHUSETTS

ABSTRACT

A comprehensive program of study and measurement of the Haystack reflector has been conducted, resulting in a performance improvement of approximately 40 percent. A stochastic approach to data taking and analysis combined with the benefits of an on-site computer provided analytical control of the adjustment operation, and at the same time assured a short reaction time between receipt of the raw data and completion of a detailed analysis of the surface condition. Conventional measurement equipment was used to control the adjustment operation with special attention given to extracting the utmost precision from each device.

The rms deviation of the best-fitting paraboloid was reduced from 0.037 to 0.017 inch in the course of the adjustments and corresponding increases in antenna performance have been observed.

Accepted for the Air Force
Franklin C. Hudson
Chief, Lincoln Laboratory Office

CONTENTS

	Abstract	iii
I.	Description of the Haystack Reflector	1
II.	Early Antenna Performance Indications	3
III.	Early Studies of Surface Quality	5
IV.	Comprehensive Measurement and Study Program	6
	A. Need for Program	6
	B. Access Problems	6
	C. Technical Support	6
	D. Study of Thermal Problems	7
	E. Statistical Approach	11
	F. Proposal to Adjust Only Center Section of Reflector	13
V.	Measurement Equipment	15
VI.	Preparation for Adjustment	17
VII.	Surface Adjustment	21
VIII.	Results of Adjustment Program	27

HAYSTACK ANTENNA
REFLECTOR SURFACE IMPROVEMENT PROGRAM

I. DESCRIPTION OF THE HAYSTACK REFLECTOR*

The construction of the Haystack reflector is unique. It consists of an aluminum honeycomb panel surface attached to a pretensioned back-up structure. The honeycomb panel surface is fastened together to form a homogeneous shell which aids in stiffening the entire reflector structure and results in a highly efficient structure with respect to its weight.

The back-up structure is composed of five annular ring trusses made of aluminum tubing. These five ring trusses are fastened to each other by aluminum tension rods in a pretensioned configuration (Fig. 1). The design is such that the tensions are maintained for all loadings of the reflector. Reflector loads are removed from the structure through the central and heaviest ring truss, ring 3, close to the 60-foot diameter of the reflector. These loads are carried from ring 3 to the elevation trunnions by tubular truss trunnion beams, one on each side of the reflector. The ends of the beams fasten to ring 3, the main support of the reflector structure, at approximately its quarter points. All inboard structure, such as the RF box and its supporting structure, is fastened directly to ring 3. The reflector itself grows inward and outward from the ring 3 truss.

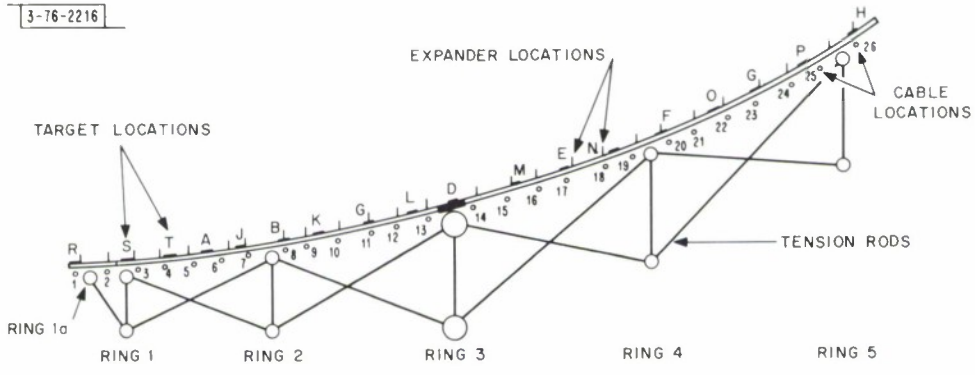

Fig. 1. Typical section through reflector.

Directly above the ring 3 truss, and fastened to it by means of stand-off studs, is the ring 3 splice plate which is made of aluminum approximately 1 inch thick by 1 foot wide. This serves as the "backbone" of the surface. All the surface panels are connected firmly to the splice plate at one end, and the surface panel loadings are brought out of the reflector through the splice plate and down into ring 3 (Fig. 2).

The reflector surface is made of $\frac{1}{2}$-inch thick aluminum honeycomb panels having prestretched 0.016-inch thick aluminum skins. The panel edge close-outs are channel shaped aluminum extrusions bonded into the panel assemblies.

* H. G. Weiss, "The Haystack Experimental Facility," Technical Report 365, Lincoln Laboratory, M.I.T. (15 September 1964), DDC 608272.

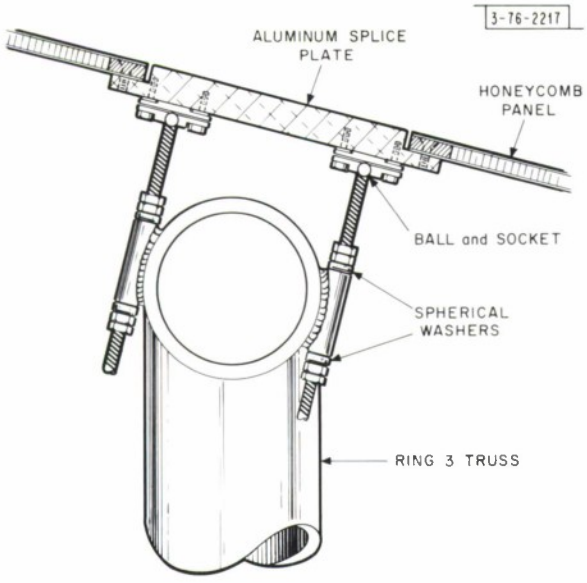

Fig. 2. Detail at splice plate showing typical stand-off stud connections.

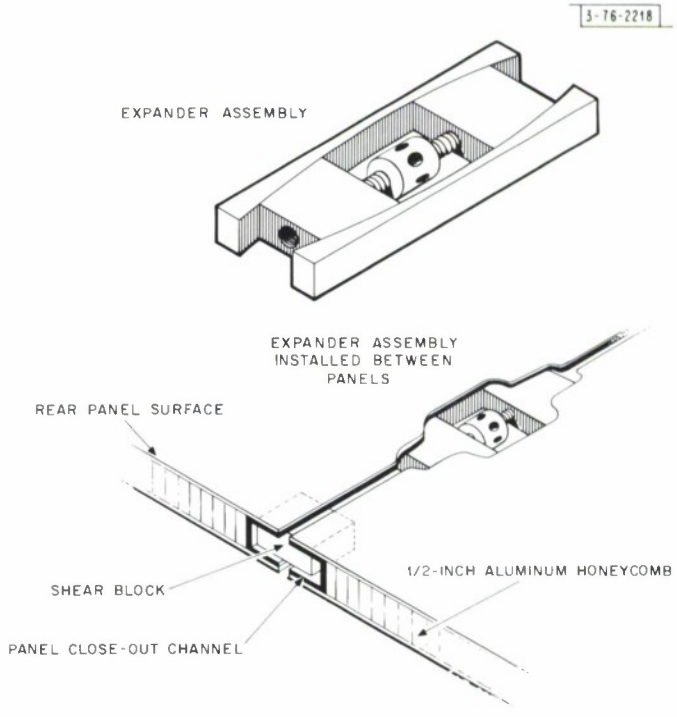

Fig. 3. Expander details.

The honeycomb surface panels are supported at each of the ring trusses by stand-off studs. The radial joints at adjacent panels are fitted with shear blocks inserted into the channel close-outs to carry the shear forces across the joints. In addition to the shear blocks these radial joints are provided with expander assemblies at about 2-foot intervals (Fig. 3). The expander assemblies control the spacing between adjacent panels, and therefore act as one of the adjustments for the surface contour. The back surface of the reflector is furnished with 26 circumferential tension cables, each of which is very close to an expander assembly. The tension cables are tensioned to values such that, for all conditions of antenna loading, the tension is maintained, drawing the panels together against the expander assemblies to form a homogeneous shell structure.

The tension cables are supported by small pulley-like guides at the back surface of the panels (Fig. 4). The guides are capable of being positioned away from the panel back surface in order to provide thrusts against the rear surface of the panel for use in positioning the surface.

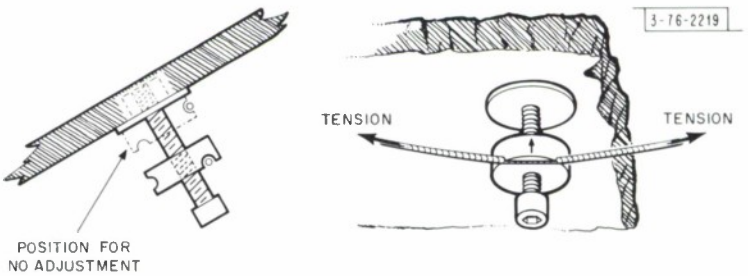

Fig. 4. Adjustable cable guide on back surface of reflector used at panel centers.

From the foregoing discussion, it can be seen that the surface contour is dependent upon the shape of the panel itself, the location and adjustment of the splice plate, positioning of the stand-off studs, adjustment of the expanders, tensioning in the cables, and adjustment of the cable guides. Because the surface panels have been drawn together into a shell structure, all these adjustments are interacting.

II. EARLY ANTENNA PERFORMANCE INDICATIONS

Shortly after the Haystack reflector was completed and placed into service the optical systems used to construct the antenna became available for extensive testing. The principal optical component affecting the quality of the surface was the optical probe, with which all the antenna panels were adjusted.

The probe (Fig. 5) was a rather heavy device weighing approximately one ton and containing eight penta-mirror assemblies mounted upon a Geneva drive assembly. Each of these assemblies was manufactured to produce a precise line-of-sight (within one second of arc) to each of the eight principal target rows (A through H) of the reflector. The probe also contained a standard optical tooling alignment telescope with micrometer. This alignment telescope was used to make the actual measurement by looking through the appropriate penta-mirror assembly to the target row in question.

During the construction of the reflector it became apparent that intermediate points between the principal target rows would be required to assure the proper surface contour. In order to measure these intermediate target rows a theodolite was mounted on top of the probe to interpolate between the principal angles described by the penta-mirror assemblies.

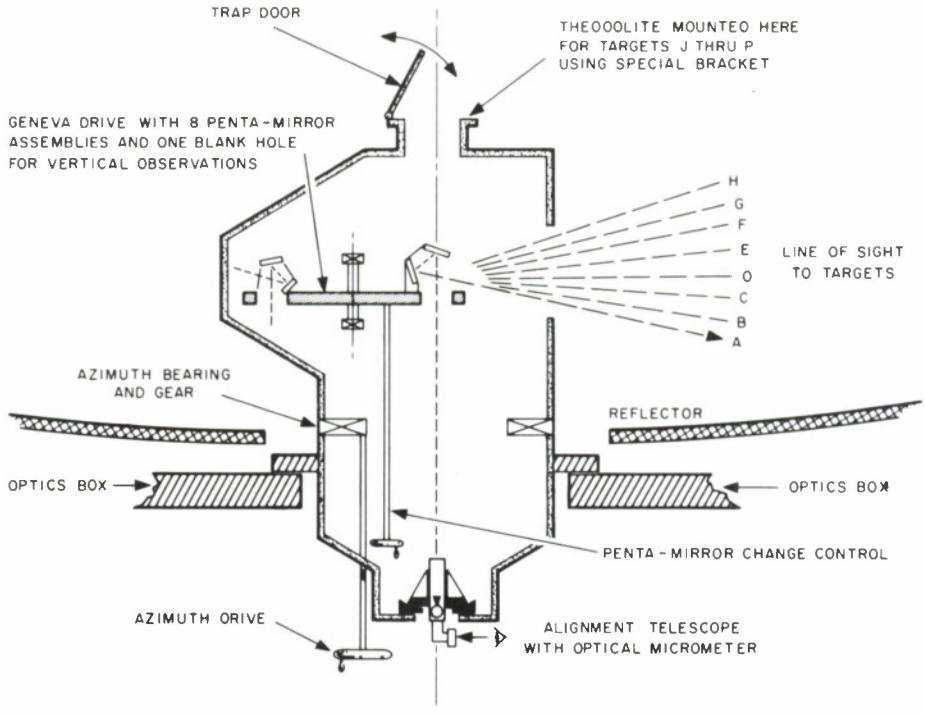

Fig. 5. Schematic of optic probe.

Attempts had been made during the final assembly of the reflector to check on the accuracy of the probe angles while the probe was still in place in the reflector. These attempts at calibration were inconclusive due to environmental variations and the lack of appropriate equipment with which to calibrate the probe. A wide range of disagreeing values for the various penta-mirror assemblies was obtained in this attempt, and the whole effort was deemed invalid. Because reasonable design effort and manufacturing care had gone into its construction, the probe was considered to be adequate for the purpose, and was used to finish the construction of the reflector. In retrospect it is possible to see some correlation between the errors in the probe obtained in these early calibration efforts and the final calibrations obtained after the probe was removed from the reflector.

Once the probe was removed from the reflector at the end of the construction and adjustment period, it became possible to attempt calibrations in a suitable test setup. A temperature stabilized room was constructed (68° ± 1°F) and the probe was supported solidly on a specially constructed weldment. The whole operation was conducted as far as possible in a location isolated from outside disturbances such as heavy truck traffic.

A precision theodolite was used to evaluate the angles described by the eight penta-mirror assemblies. The technique employed was to autocollimate through each mirror assembly to a pool of mercury for a gravity reference (Fig. 6). Many sets of forward and reverse readings were taken over a considerable period of time. The precision of the results is believed to be one second of arc or better. A check of this setup, using a certified penta-prism assembly, showed agreement with the certified value within 0.1 second of arc. The test was therefore considered valid.

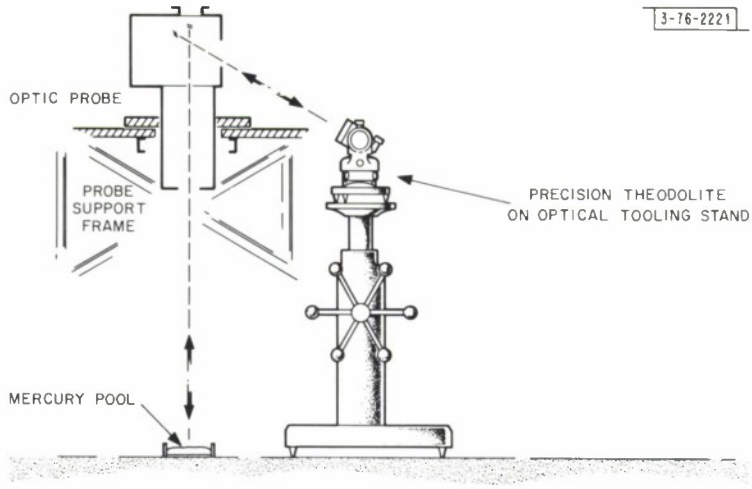

Fig. 6. Autocollimation setup for calibrating optic probe in a room temperature-controlled to 68° ± 1°F.

The results obtained showed that all of the penta-mirror assemblies were in error, some by small amounts, and others up to almost one minute of arc. The worst penta-mirrors were disassembled and the reason for the errors became clear. Corrosion was found on the mirror support buttons. Only a few micro-inches of corrosive buildup are necessary on these buttons to considerably alter the value of the penta-mirror angle. During construction of the reflector, in the winter of 1963-1964, some problems were experienced with water seeping through the radome joints from melting snow and ice. Considerable water was present around the optical probe and humidity was quite high. The presence of such large amounts of moisture is believed responsible for the corrosion in the penta-mirror assemblies.

Subsequent measurements of the probe also disclosed errors introduced by the alignment telescope mount, the Geneva drive assembly, the penta-mirror mounts, and the azimuth bearing assembly. However, these errors totaled only a very few seconds of arc error.

In the meantime the antenna was operational, and the data taken was beginning to show performance below that anticipated. Radio frequency measurement results, calculated by the Ruze formula, indicated that the reflector had an rms deviation in excess of 0.055 inch.

The calibration measurements of the optical probe and the radio frequency measurements describing the performance of the reflector surface taken together, indicated the need for a careful investigation of the quality of the reflector surface.

III. EARLY STUDIES OF SURFACE QUALITY

During the early operational life of the Haystack antenna an adjustment (or rerigging) study committee was formed to resolve some of the questions that had arisen concerning the quality of the reflector surface. The mission of the committee was to discover, if possible, what the surface condition was, and to evaluate the potential from a readjustment of the surface.

Thermal studies of the radome environment were being carried out at about this time. These related to solar heating and heating effects produced by the radome heating system. The effect of these temperature differentials upon the reflector itself was also under study.

In order to support the work of the committee, a series of stretch-wire measurements was carried out. Because of the construction of the reflector it was not possible for measurement personnel to occupy the reflector surface. The stretch-wire approach made it possible to make

some coarse measurements of deflections at some of the accessible elements of the reflector. These measurements were then used by the committee to evaluate the analytical deflections projected from the structural analysis of the reflector. In general there was a reasonable correlation between predicted deflections and measured deflections.

The committee investigated the use of photogrammetry as a means of measuring and evaluating the surface. A modest effort for measuring a portion of the reflector was attempted but no useful data was obtained and the approach was abandoned.

At a late stage in the deliberations of the committee some theodolite measurements were taken for a representative sample of targets for the reflector. This first data was best-fitted and showed the reflector to have an rms in the neighborhood of 0.055 inch. The measurement setup used was crude and difficult to work with and left some doubts as to the precision of the results. However, the magnitude of the rms was roughly consistent with the observed performance of the antenna at radio frequencies.

The final report of the committee concluded that benefits were to be obtained from readjusting the surface, and that readjustment was feasible to consider.

IV. COMPREHENSIVE MEASUREMENT AND STUDY PROGRAM

A. Need for Program

The final report of the adjustment study committee had been based mostly on opinions of its members, supported by meager mechanical measurements, and based on conclusions drawn from the observed performance of the reflector at radio frequencies. Estimates of the effort required to readjust the surface ran as high as six months down time and a quarter of a million dollars. There was an understandable reluctance to commit the Laboratory to a program of this scope based on so little solid data. As a consequence, a more comprehensive measurement and study program was initiated.

B. Access Problems

At the outset of this more comprehensive effort the program was faced with two primary problems.

(1) Lack of access to either front or rear surface of the reflector

(2) Lack of a suitable facility for supporting the measurement instrument and its operator.

To solve the first problem a proposal from North American Rockwell Corporation (then North American Aviation, Inc.) for a nylon net access system suspended in the back-up structure was adopted (Fig. 7). North American was also commissioned to produce a movable radial catwalk system for access to the front surface, and to design an instrument stanchion and operator platform.

C. Technical Support

Two contracts were awarded in support of the study phase of the program. The first was with North American, the original designers and manufacturers of the antenna.* The second was with the consultant firm of Simpson Gumpertz & Heger. The intent of the study contract with North American was to derive the benefits of their previous experience with this unique

* Bi-Monthly Status Report for Contract AF 19(604)-7430, Haystack Antenna System, Report No. NA-61H-19-22, North American Rockwell Corp., Columbus Division (15 September 1964).

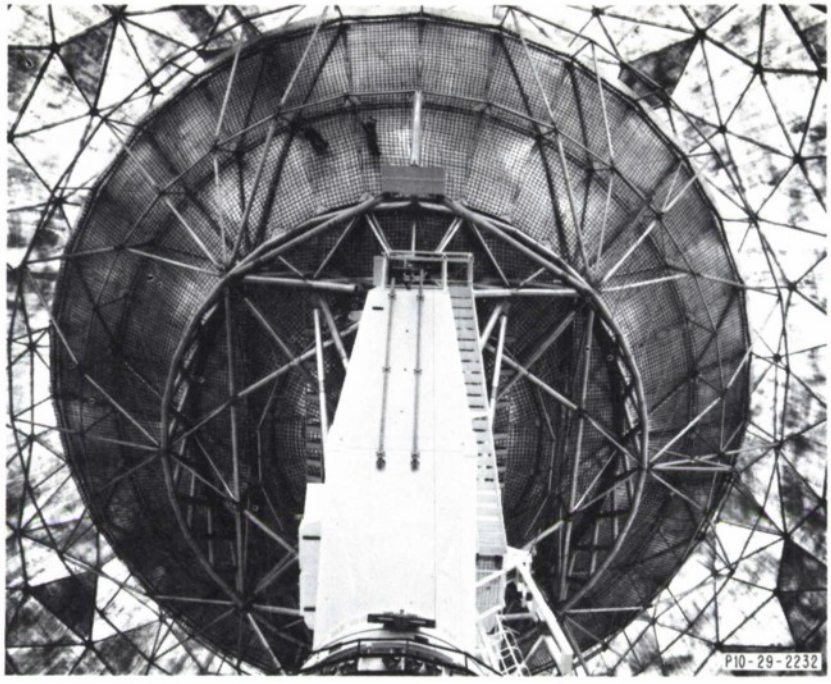

Fig. 7. Rear access net.

design and to enable the interpretation of proposed future efforts in terms of practical experience. The function of the Simpson Gumpertz & Heger contract was to provide the analytical interpretation of the various measurement efforts and to evaluate the structural and thermal qualities and possible potential of the reflector structure.

The front access system and optical stanchion (Fig. 8) and the rear net access system were both installed during the summer of 1966. Following this installation it became possible to make extensive precise measurements of the reflector surface for evaluating the quality of the surface.

D. Study of Thermal Problems

Many sets of surface tolerance readings were taken which disclosed rather serious thermal problems. Sets of readings from the reflector surface, taken at noontime, were best-fitted to an rms of about 0.055 inch. Similar sets of readings taken at midnight yielded a best-fit rms of about 0.035 inch.

In connection with the analytical study effort, Simpson Gumpertz & Heger ran an analysis of a thermal model of the reflector on a 7094 computer. The results of this computer run indicated that the only structural member in the reflector that had any serious effect on surface quality, was the splice plate (Fig. 9). In a thermal study by Dynatech, it was shown that the various members of the reflector structure had widely varying thermal time constants (Table I). The value of the time constant for the splice plate was calculated to be about 4 hours, while the time constant for the surface panels was only a very few minutes. It was this difference in time constants between the panels and splice plate that caused the large amount of warping of the surface observed under the influence of thermal-time gradients. This accounted for the large change in rms from the noontime condition to the midnight condition.

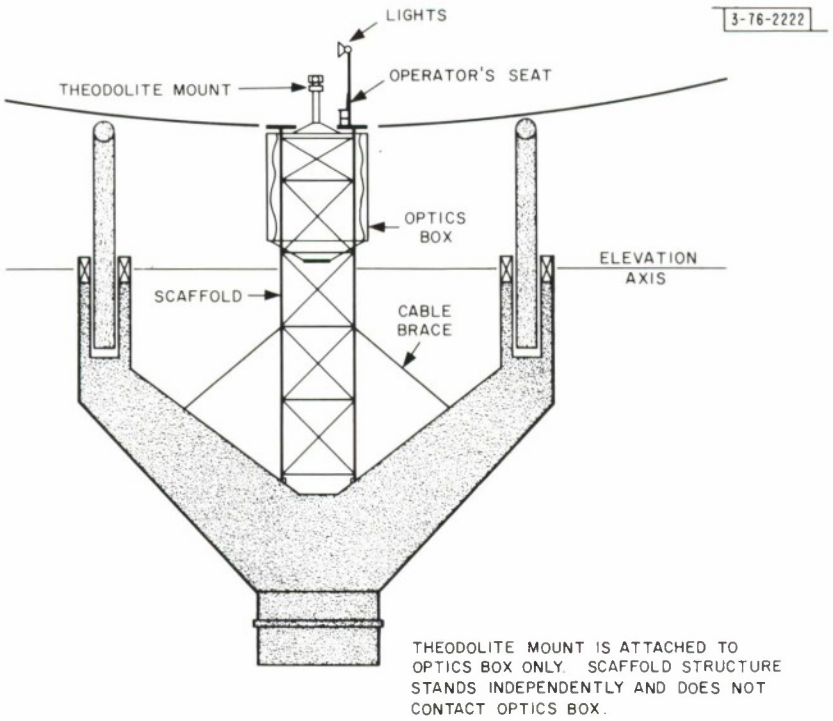

Fig. 8. Optical stanchion and operator platform.

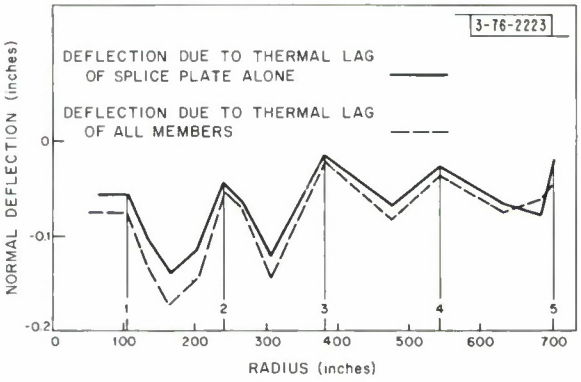

Fig. 9. Normal deflection at noon.

TABLE I

ESTIMATED DEVIATION OF STRUCTURE TEMPERATURE FROM AMBIENT DURING DAYTIME TRANSIENT OF 15.4°F*

Item	Description	Time Constant	Maximum ΔT
Rings 1, 2, and 4	4-inch dia., 1/8-inch wall	0.975	3.7
Ring 3	12-inch dia., 5/16-inch wall	2.70	7.2
Ring 4	4-inch dia., 1/4-inch wall	1.76	5.8
Ring 5	5-inch dia., 3/32-inch wall	0.81	3.2
Aluminum Rod	7/16-inch dia.	0.555	2.2
Aluminum Rod	9/16-inch dia.	0.705	2.8
Aluminum Rod	13/16-inch dia.	1.05	3.9
Aluminum Rod	9/8-inch dia.	1.47	5.1
Steel Stud	3/8-inch dia.	0.635	4.1
Aluminum Splice Plate			
"Face Side"	1-inch thick	4.155	8.3
"Face Up"	1-inch thick	6.93	9.8
Honeycomb			
"Face Side"	1-inch thick	0.19	0.8
"Face Up"	1-inch thick	0.26	1.0

* J. G. Bourne, "Temperature Instrumentation of the Haystack Antenna – Radome and Dish," Third Interim Contract Report, Dynatech (18 June 1965).

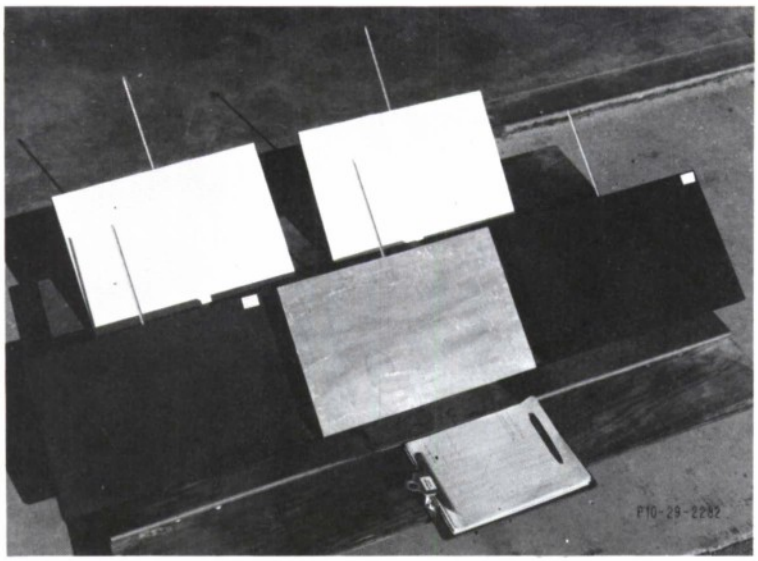

Fig. 10. Test setup for selecting splice plate paint.

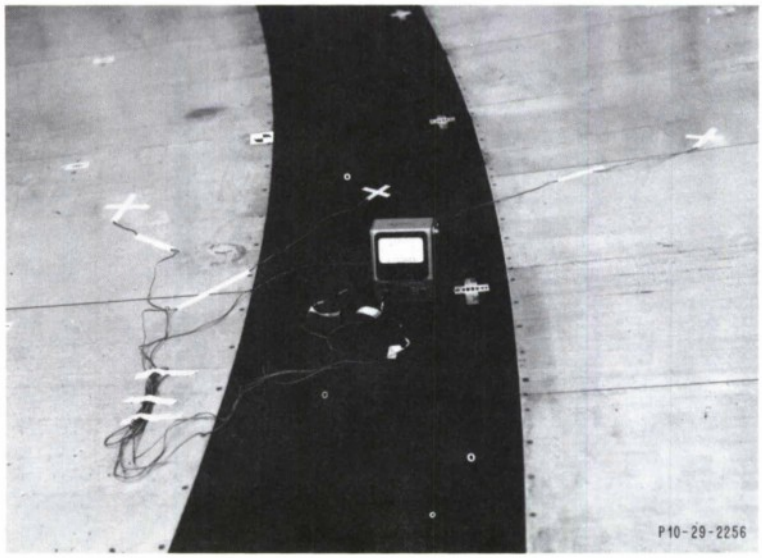

Fig. 11. Splice plate after painting showing differential temperature measuring equipment and typical optical targets.

During the study several ideas for desensitizing the response of the surface to thermal influences were explored. Meanwhile, in an attempt to reduce this thermal effect tests were conducted to choose the most effective splice plate paint (Fig. 10). Flat back krylon was chosen and the splice plate was painted on both front and rear surfaces (Fig. 11). Subsequent sets of readings showed the noontime rms was reduced to about 0.045 inch, while the midnight rms remained at about 0.035 inch. It was concluded from these observations that the greater part of the 0.035-inch rms midnight value was due to built-in errors stemming from errors in the optical probe. The change in rms for the two thermal conditions began to be consistent with goals desired in readjusting the reflector surface.

The most significant result of the thermal model computer run was the revelation that the splice plate time constant was solely responsible for the thermal deviations of the surface. Previously it was thought that some of the other heavy back-up structure members, which had also been shown by Dynatech to have large time constants, were contributing to these surface deformations. The fact that the time constant of the splice plate alone was responsible considerably simplified the problem of dealing with this thermal response.

E. Statistical Approach

Simpson Gumpertz & Heger had earlier proposed a stochastic approach to data handling and analysis. After due consideration, this was adopted as the method to be followed in the study program and in any eventual adjustment program. The benefit accruing from a statistical approach to the measurement problem was a great reduction in the time required for data gathering. The complete reflector contained almost 1500 measurement targets. Collecting this amount of data required almost two complete working shifts for an optical crew. During this length of time it was impossible to be sure of anything like a "standard" condition for measurement.

The adoption of a statistical approach, using a representative sample of the reflector, made it possible to take a measurement set of data in about a 4-hour period. Thus a data set could be obtained from about 11 P.M. to 4 A.M., the most stable period for most days. Experience has shown this to be a very useful approach to the measurement problem. The disadvantages resulting from any errors in judgement in the selection of a proper statistical sample are outweighed by the fast reaction time obtained, and the errors introduced into the rms by this approach are considered to be far less than those introduced by working with data referenced to an unstable base. The results obtained from the selection of different statistical samples, and of different-sized statistical samples, were still very consistent and always produced rms's in very close agreement with each other.

It is important to note that, although reviews of the surface quality were obtained by use of statistical samples, it was, and still is, necessary to retain the 1500 target points for any adjustment program. As a matter of fact, during the rigging operation that finally ensued, the number of target points was increased to over 1700 targets. In the actual adjustment operation it was necessary to read <u>every one</u> of these target points many times, but not all 1700 in one set. The use of a carefully considered representative sample greatly simplifies the process of surface quality evaluation, and, because of the shorter time period involved in data taking, enhances the precision of the result. It was found that about a 400-point sample was sufficient to describe the quality of the Haystack surface adequately (Fig. 12).

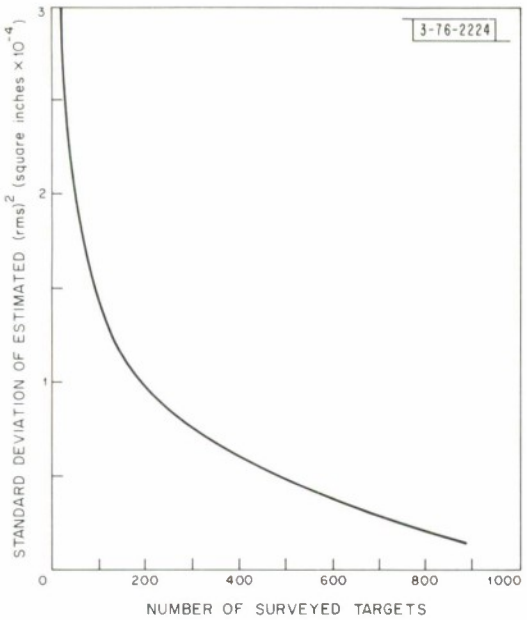

Fig. 12. Variation of standard deviation of estimated (rms)^2 of reflector with number of surveyed targets.

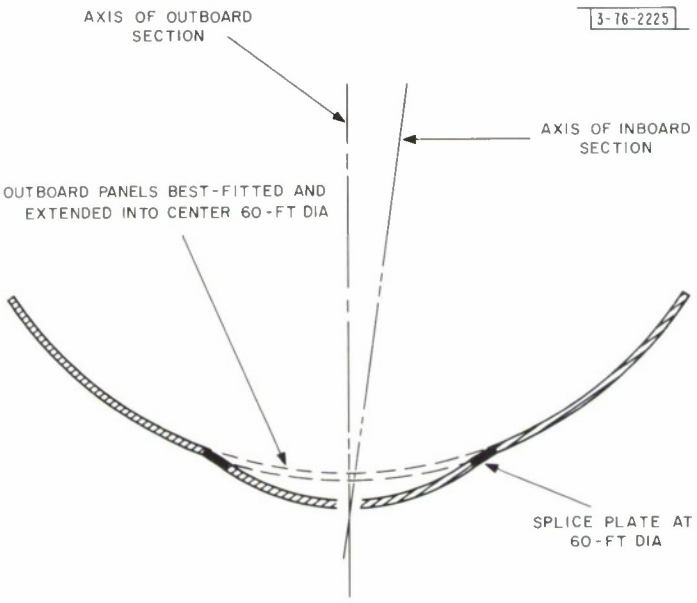

Fig. 13. Exaggerated sketch of reflector shape.

F. Proposal to Adjust Only Center Section of Reflector

Plots of the deviations from the best-fit paraboloid resulting from the series of measurements taken showed some interesting characteristics. The shape of the reflector surface could be visualized as two separate reflectors separated by the splice plate (Fig. 13). The inner reflector, or inner 60-foot diameter, was deeper in curvature than the best-fit paraboloid, and had the largest deviations from the best-fit. The outer portion of the reflector more nearly matched the curvature of the best-fit paraboloid. In addition, the inner 60-foot diameter appeared slightly tilted with respect to the outer portion of the reflector. Rms calculations were made for both the inner 60-foot portion and the outer portion, as separate entities. After inspection of these results, a best-fit was made to the outer portion of the reflector and then extrapolated toward the center of the reflector. Values were then assumed for the center 60-foot portion, assuming reasonable tolerances for adjusting to the contour of the extrapolated best-fit parabola. The resultant rms calculated for the whole reflector was most encouraging, and from this was derived the idea of adjusting only the center 60-foot diameter to the paraboloid which best fit the outer portion of the reflector. This in effect increased the errors in the center 60-foot diameter while it reduced the errors in the outer panels. The advantage of this approach was the considerable reduction in area that must be considered for readjustment. The inner section was only one-fourth of the area of the reflector and therefore required only one-fourth of the number of adjustments. In addition, the center 60-foot diameter was an easier area in which to perform adjustments than was the outer section of the net access system.

This approach formed the basis of a proposal for a trial adjustment program, which was suggested as a method to improve the overall efficiency of the reflector, demonstrate the validity of the study, and demonstrate the feasibility of adjusting this unique surface. At the same time this approach offered a minimum in loss of operation of the antenna during downtime and a minimum in cost. The computer analysis projected a surface expected to be very close to the desired goal as a result of this trial adjustment program.

The complete details of the analytical studies and computer programs involved have been amply recorded in the Simpson Gumpertz & Heger final report* on the feasibility of rerigging the Haystack reflector. However, some points should be mentioned. Throughout the analysis of measurement data, and resulting calculations for rms, errors affecting the result have been included in the calculations. Error bounds were established for items such as instrument error, operator error, thermal deviations during the measurement set, errors in original target placement, etc. Items of this nature were incorporated statistically in the resultant rms figure. In addition, the structural deflection characteristics were included so that the rms figure given was for a reflector optimized for use between 20 and 70 degrees elevation angle. The values of the various targets were weighted to reflect the area represented by each particular target as well as the relative amount of illumination to be expected at that particular target.

At the completion of this study it was concluded that the adjustment of the center section alone, using reasonable values for all the errors affecting the result, would produce a total surface with an rms of about 0.018 inch for nighttime conditions, with an rms of up to 0.025 inch under severe daytime conditions (i.e., hot bright July sunny day). It was estimated that this effort would require seven weeks of down time and would cost approximately $25,000.

---

* H. Simpson and M.S. Zarghamee, "Feasibility Study for Rerigging the Haystack Antenna," Report No. SGH-668-1 prepared by Simpson Gumpertz & Heger, Inc. for Lincoln Laboratory, M.I.T. (23 February 1967).

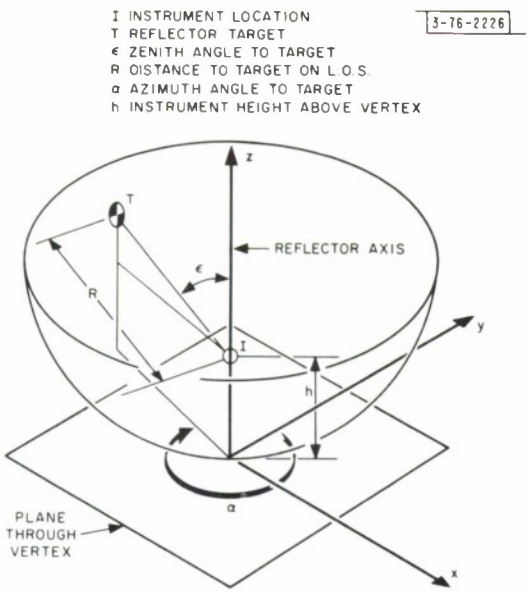

Fig. 14. Typical reflector coordinate system.

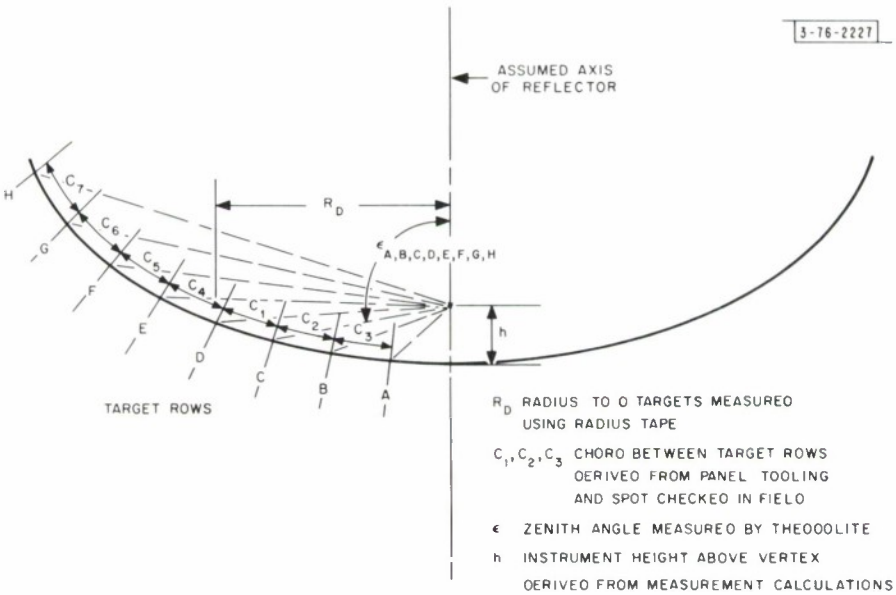

Fig. 15. Elements of measurement for Haystack reflector.

V. MEASUREMENT EQUIPMENT

The measurement problem requires that each of the reflector measurement target locations be accurately located in space with respect to some coordinate system. The most commonly used coordinates employ the axis of the reflector as one axis of the coordinate system, while the other two axes form a plane through the vertex of the reflector (Fig. 14). For measurement purposes this was the system used in the Haystack adjustments. Normally the reflector axis is vertical, and the plane through the vertex is horizontal.

To define the location of any target point with respect to this axis system requires the knowledge of two kinds of data: the radial distance to the target point, and the angle from vertical to the target point from some point on the vertical axis.

In actual practice the radial distance was calculated from the geometry of the target locations, and based upon the known careful location of each target at the time of panel manufacture (Fig. 15). It is assumed that each target remains in the same relative location with respect to every other target. It was necessary, however, to confirm that these relative locations were not affected by any deformations in the panels resulting in changes in these distances. Measurements made to check the validity of some of these distances revealed no significant differences between actual locations and design locations. Consequently, the recorded values were used as one element of the solution, but with an allowance to provide for the error band associated with their original placement and measurement.

Several measurement devices were required to accomplish the tasks associated with evaluating the surface as well as controlling the actual adjustments. A precision theodolite was used for the angular readings to the targets. For measurement of the individual radial distances between targets an optical trammel device, built to a design suggested by Lincoln Laboratory was used (Fig. 16).

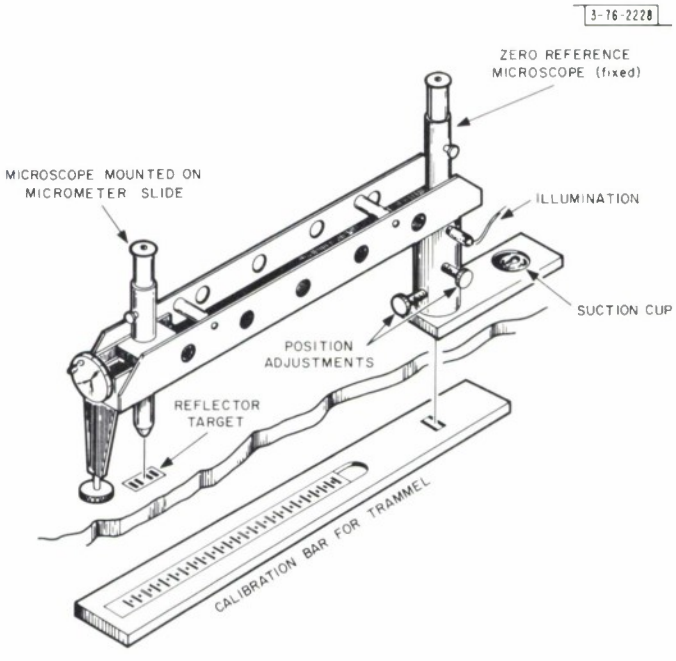

Fig. 16. Optical trammel used for checking chord distances between adjacent target rows.

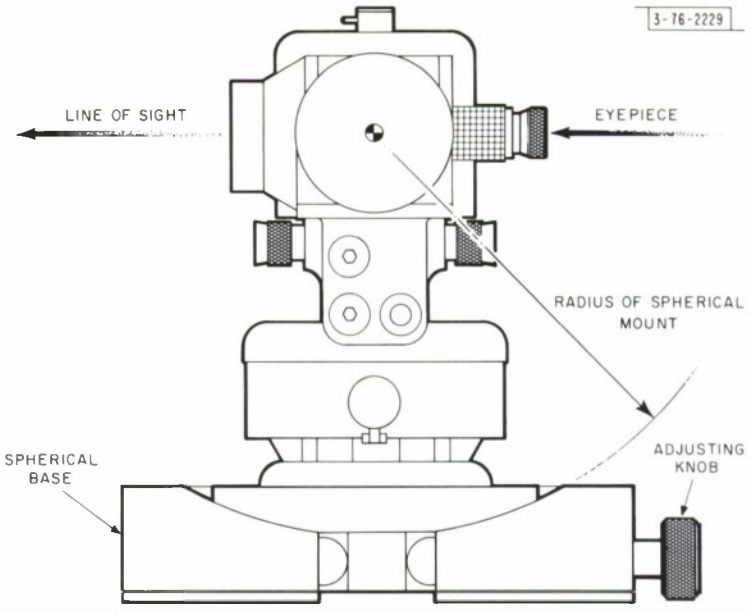

Fig. 17. Theodolite mounted on "flying saucer."

To control the radius dimension to the splice plate, a distance which in the original design was a basic dimension for locating the target rows, the original radius tape and associated optics were used. Leveling of the reflector was accomplished using a precise optical level and monitored by an electronic level.

The characteristics of any 3-level-screw theodolite are such that any correction for level, using the three leveling screws, results in a displacement of the optical center of the theodolite. To overcome this difficulty, a Lincoln-Laboratory-designed "flying saucer" mount was provided for the instrument stanchion (Fig. 17). This mount has a spherical seat designed to have a radius equal to the distance from the optical center of the theodolite to the spherical surface. The flying saucer mount thus allows movement of the theodolite about a tilt axis through the optical center of the instrument without displacing the center of the instrument with respect to the coordinate system. The flying saucer proved to be a most valuable accessory as it allowed readjustment of the theodolite to compensate for shifting of the reflector structure while at the same time the optical center of the instrument was maintained in its same position. The computer programs for analyzing the measurement data were keyed to the instrument location in the coordinate system. To have allowed the optical center of the theodolite to move about would have considerably complicated the analysis of the measurement data, and could possibly have resulted in misinterpretation of the data due to a shifting reference system. The basic precision desired for the angular measurement system was one second of arc. Throughout the whole measurement and adjustment program the antenna and reflector were moving around many times this amount from thermal and other influences.

The theodolite itself was specially constructed. It differed from the standard theodolite of its type in that it was modified to provide a short focus capability. The optical axis of the instrument was carefully adjusted to pass through the intersection of the elevation and azimuth axes of the instrument. Immediately before using the theodolite for the adjustment program it was given a final fine tune up, and a calibration was made for run-out of the focusing slide.

The residual errors left in the instrument amounted to about $1\frac{1}{2}$ seconds of arc including the error of the observer making the calibrations. For use in the actual reflector calculations, the computer analysis allowed for a total error in angular readings of $3\frac{1}{2}$ seconds of arc. Experience indicates that this value was an ample allowance for this particular instrument for this application. Performance of the instrument throughout the program appears to have been well within this tolerance. While it is true that standard procedures for use of a theodolite by taking circle left and circle right readings, operate to increase the precision of the readings, such a procedure uses too much time when one contemplates the large amount of data that must be collected in this case, and the relatively short stable periods for the reflector structure in which to collect it.

Performance of the theodolite on this project indicated that a "soak time" of about 36 hours was required for the instrument to produce consistent results. Once the instrument was initially set up, its illumination system was turned on and left on, at the same voltage, for the entire project. Any large changes in the radome thermal environment resulted in the necessity for another "soak time" of about the same length. It should also be noted that it is important to protect the instrument as much as possible from the body heat and exhaled breath of the operator. The operator's awareness of these facts was considered sufficient protection without resorting to shielding or insulation.

Other accessory measurement equipment required included cable tensiometers for reading cable tensions, optical tooling alignment telescopes and associated bracketry, optical tooling targets and target mirrors, optical tooling scales, temperature measuring and recording equipment, and adequate lighting. Light for the theodolite measurements of the antenna targets was provided by four photoflood reflector-type bulbs. Two floodlight bulbs illuminated the inboard area of the reflector, and two photoflood spotlights illuminated the more distant targets. By operating these bulbs at reduced voltage (approximately 100 to 105 volts) it was possible to get good illumination and reasonably long life. When not in operation for measuring, the bulbs were left on, but the voltage was reduced to about 50 to 70 volts. Under these conditions of operation, bulb life was better than two weeks in most cases. Adequate target illumination is considered to have a very pronounced effect on the ability of the instrument operators to do precise work and reduces the fatigue element which also affects the precision of the result. Instrument operators were also changed at reasonably frequent intervals to hold fatigue induced errors to a minimum.

VI. PREPARATION FOR ADJUSTMENT

The final phase of the surface improvement program began on 25 September 1967. It was on this date that the antenna was removed from service and turned over for the actual adjustment program. The adjustment period was scheduled for seven weeks, ending on 10 November 1967.

The first portion of the actual adjustment operation was concerned with the preparation of the reflector. It was necessary to install all the measurement and adjustment equipment, prepare the surface, and take and process data. A little over one week was devoted to this initial preparation.

It was necessary, first, to remove the RF box and install the optics box. During the course of the summer, improvements were made in the optics box to prepare it for the adjustment program. Structural members were added to the box to increase its stiffness, and several convenience features were added. After the installation of the optics box it was possible to move the

reflector to the zenith-look position, where it was to remain throughout the adjustment effort. Following the elevation to zenith-look, the operator's scaffolding was installed. This scaffold reaches down through the antenna structure to firm supports at the azimuth bearing level. The scaffolding does not contact the antenna at any point in its passage up through the structure. Its purpose is to support the instrument operator's platform and chair, and to isolate them from the reflector structure. Because clearances around the scaffold were very close, it was necessary to readjust it from time to time, as leveling of the reflector progressed, to prevent its contacting the reflector structure.

While the scaffold was being installed, the elevation vernier adjustments were connected. The elevation verniers are two threaded jacking rods connected between the elevation counter weight and the fixed portion of the elevation buffer stops. Their purpose is to hold the elevation attitude of the reflector (there are no brakes in the drive system) and to provide for finer elevation control than is possible from the control console using the antenna drive system. To hold the antenna in azimuth the hydrostatic azimuth bearing was set down in the chosen position.

Other items installed at this time were the illumination system, radial catwalks, extra lead bars to bring the optics box up to standard weight, various items of measurement equipment, temperature recording equipment, telephone communications, and assorted tools (Fig. 18).

One of the first steps necessary was the leveling of the reflector. Because there are no references on the reflector which represent a plane normal to the reflector axis for leveling purposes, and since, even if there were, there is no guarantee that these references would be valid, it was necessary to "cut and try" to find the most likely level position for the reflector. It was also known that the azimuth bearing was no longer level due to slight tilting of the concrete tower from causes which have never been determined. It was therefore necessary to play the azimuth position against the elevation attitude of the reflector to find the most level situation. The level determination was made by reading all of the row D targets (the targets on the relatively firm splice plate), and plotting the level deviations with respect to azimuth. This was

Fig. 18. Photograph showing instrument and stanchion, front access catwalks, operator's chair, platform and lights.

an iterative process. After each plot the antenna was adjusted in azimuth and elevation, and readjustments continued until no sinusoidal trend in the level data was discernible. This position was then adopted as the measurement and adjusting attitude, and represented the "best guess" as to a true zenith-look attitude. Henceforth, the reflector surface was to be adjusted in this orientation.

Levelling of the reflector was dictated by the desire to reference all theodolite readings to gravity and not by any adjustment requirements. The gravity reference was to make possible the detection of any movement in the structure during adjustment. As it turned out, it was necessary to abandon the gravity reference approach during the operation. This will be discussed in Sec. VII.

In any review of a previously built antenna surface, one cannot make any assumptions about the location of the vertex, axis, reference targets, etc. The fact that a survey, or adjustment, is necessary usually is reason enough to believe that certain portions of the reflector are not where they are supposed to be. Which portions are "good" and which are "bad" are unknowns. However, it is necessary to have a reference coordinate system from which to perform the calculations. In this case the reference system was based on a vertical axis through a horizontal plane passing through the optical center of the theodolite. These conditions could be satisfied by any location of the theodolite in (or out of) the reflector. To hold uncertainties to a minimum, and to minimize large translations in the data and/or the real surface, it was desirable to place the theodolite as close to the existing reflector axis as it was possible to determine.

The lateral location of the theodolite was determined by radial measurements from the splice plate, using the original radius tape assembly (Fig. 19). In the optics box, but below the theodolite stanchion, an alignment telescope was mounted in an adjustable bracket. This telescope was aligned to look up vertically by leveling it with an electronic level. The alignment telescope was then used to read the radius tape to measure the radius to each of the row D targets. The alignment telescope was laterally shifted, while maintaining its vertical attitude, until all the sinusoidal run-out in the radius data was eliminated. This position was then adopted as the axis of the reflector and of the measurement coordinate system. At this point the row D targets were in as close to a level plane as possible and the vertical axis passed through the center of the circle described by the row D targets. Hopefully, the best-fit paraboloid would have an axis very close to this one, but if it did not, it would not necessarily prevent the successful completion of the adjustment effort.

The instrument stanchion was fitted, top and bottom, with optical tooling targets, and then, using the alignment telescope, the stanchion was positioned on this axis as defined by the alignment telescope. The flying saucer mount was located on the stanchion and adjusted to the axis through the use of an illuminated center target with which it is provided. The theodolite was then mounted on the flying saucer and leveled. The measurement system was now ready to take the initial data. One week was required to perform the tasks just enumerated.

The crew was concurrently preparing the reflector for adjustment. Lock pins were removed from the expander assemblies and safety wires were removed from the cable tension turnbuckles. The stand-off stud to panel attachment bolts and the stand-off stud nuts and lock nuts were loosened. Cable tensions were measured before loosening any of the adjustment assemblies and were found to be about 20 percent too low in each case.

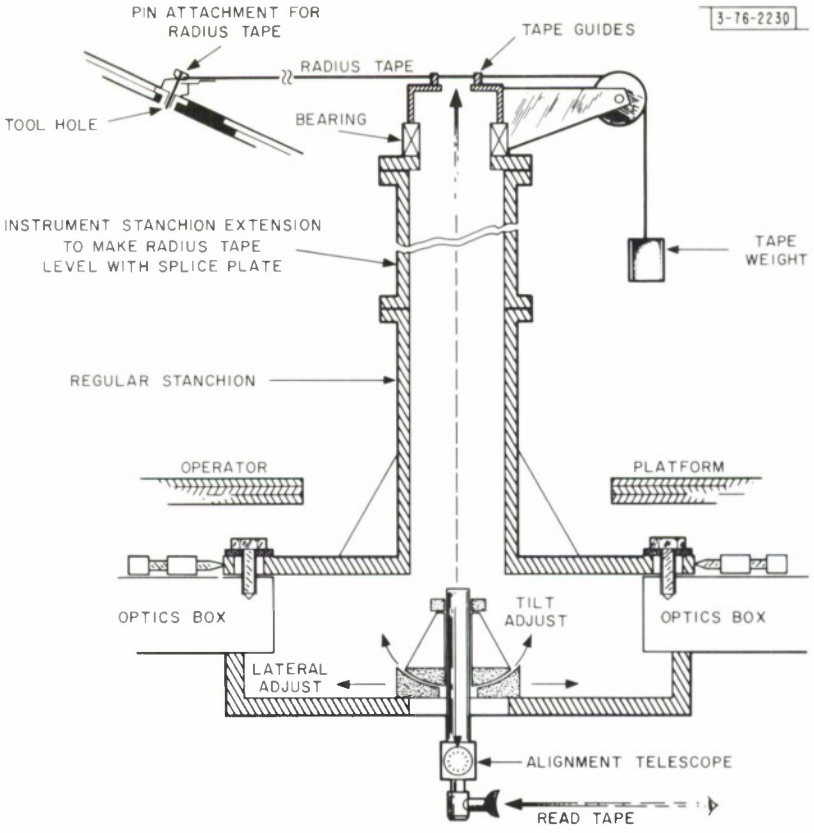

Fig. 19. Radius tape measurement setup.

These concurrent preparations were being made from the rear net access system. It was necessary to stop these operations in the nets while actual measurements were being made. At these times, however, the adjustment crew was needed to assist at some of the measurement operations.

During the first week of the program many of the preparation items were carried out during the regular day shift hours, while a lot of the measurement operations were proceeding at night. After the beginning of the second week all measurement and adjustment operations were carried out between 9 P. M. and 4 A. M. the most stable period of the day.

The first measurement data were taken toward the end of the preparation period. Card punchers, available on the regular day shift on the morning following a measurement set, transferred the data to punch cards. That afternoon the cards were submitted to the CDC 3300 computer at the site for processing. When the adjustment operation resumed in the evening these reduced and analyzed data were available for that evening's activities. The reaction time between raw data and processed results was kept to a minimum throughout the program by this mode of operation.

Support similar to that provided for the study program preceding the adjustment effort was obtained from North American Rockwell Corporation and Simpson Gumpertz & Heger. Simpson Gumpertz & Heger support included the reduction and analysis of measurement data. North American provided technical support throughout the actual adjustment operations, and their experience with this reflector was invaluable during the adjustment operation.

The first data set taken best-fitted to an rms deviation of 0.037 inch. This was the first data taken since the study program of a year ago. The reduction of the data taken at that time was not as refined as in the current program. Since the targets sampled were different from those of the previous year, the agreement of error for the two sets of conditions was a reassurance that the reflector was not changing shape over a period of time. The consistent rms value for nighttime readings demonstrated that most of this error had been built into the reflector and was not the result of any degradation over a period of time.

The computer program prepared by Simpson Gumpertz & Heger produced tables of deviations to be used in adjusting the surface. It was also possible to call for the required adjustments to be printed out in actual turns of the adjustment screws. The latter type print-out was used initially until the adjustment crew became familiar with the operation. Later the time and expense of preparing these tables were eliminated in favor of personal judgment in making the adjustments.

After the set of initial data was taken, the cable tensions were brought up to their original values. Subsequent data did not show any appreciable change in the surface as a result of this increase in tension.

This completed the preparation phase of the program. It is interesting to note that of the seven-week total schedule, the first week and a half was spent in preparation. It is also important to realize that the ultimate success and speed of operation depended upon this careful preparation.

VII. SURFACE ADJUSTMENT

The surface contour of the Haystack reflector is controlled by many redundant and interacting adjustments. In all there are approximately 4000 separate and individual adjustments to be performed in controlling the surface contour of the whole reflector. The goal of the adjustment program was to adjust the center 60-foot diameter portion of the reflector in the manner described previously. This represents about one-fourth of the total area of the reflector and hence one-fourth of the adjustments. This amount of adjustment was more consistent with the amount of down-time that could be scheduled for the antenna; and, from the study program, it appeared that sufficient improvement in surface quality could be obtained by adjusting this portion of the reflector to the projected contour of the outboard section of the reflector.

The actual process of correcting surface irregularities can be illustrated by the following example. Assume a flat table top upon which has been deposited a quantity of water. The pool of water is now covered with a plastic film and some air bubbles are visible through the film. Pressing on the film over one of the bubbles causes it to move to a new location, and perhaps causes it to break up into several other bubbles. In order to remove the bubble from under the film it is necessary to sweep it along until it passes out at the edge of the pool of water. If we now assume that the plastic film is captive to the table top by several heavy concentric rings placed on the plastic film, it is obvious that the air bubbles cannot be swept out unless the rings are raised to let the bubbles pass. This action is analogous to the situation in the reflector surface. The sweeping action is performed by adjustment of the expanders and cable guides, and the restraint of the heavy rings compares to the restraint imposed by the stand-off studs at the ring trusses in the reflector.

It should be clear from the example that adjustment of the surface requires that the stand-off studs be loose to permit the escape of the out-of-tolerance bubble. Since the reflector is

divided in half by the heavy splice plate member, and, since this was not to be adjusted in this project, it was necessary to sweep all inboard "bubbles" to the center hole and all outboard "bubbles" out through the rim. When there were two out-of-tolerance areas of approximately the same area and of opposite sign, it was sometimes possible to drive the two together and eliminate them both. This would not be true if the surface was a flat plane since either a positive or negative "bubble" would have more surface area than the space available when flattened. In a doubly curved surface such as the reflector, the high and low spots with respect to the desired surface represent shorter or longer radii from the axis to the points in question, and, therefore, highs and lows could be made to compensate for each other.

In actual practice it was not necessary to progressively chase the errors out of the surface by following along behind them with adjustments. By leaving an escape route from the area in question to, say, the hole in the center of the reflector, one could expect the "bubble" to follow the line of least resistance and move down to the hole and out of the reflector surface. The reflector panels were manufactured to have a particular curvature, and this was the curvature desired at the completion of the adjustments. The errors in the surface were departures from the optimum curvature, so the reflector panels had a tendency to assume the proper shape and the errors had a tendency to move out of the panels if a path was provided.

Initially, all the stand-off stud connections were left quite loose. The errors in the inboard section of the reflector were quite large because of two conditions. The first condition was that the center portion of the reflector contained the worst out-of-tolerance areas in the reflector. The second condition resulted from best-fitting the outboard panels and extrapolating this curve into the center section. This reduced the outboard errors at the expense of the inboard errors. However, the inboard errors were gross to start with and needed large adjustments anyway. The increase in adjustment due to this approach did not increase the amount of work in the center portion; it only increased the magnitude of each individual adjustment. Therefore, a much smaller area required adjustment than would otherwise have been the case. Near the center of the reflector the panels were quite low with respect to the paraboloid best-fitted to the outboard panels, and adjustments of almost $\frac{1}{4}$ inch were required.

During the gross adjustment of the center 60-foot diameter all the stand-off studs were left completely free, both at the stud-to-panel and stud-to-ring connections. The surface was raised in the following manner. When the stand-off studs had been loosened, the computer output chart for "turns of the screw" was consulted, and a table of expander adjustments was prepared. In order to raise the surface these expanders had to be released, or, in other words, the expanders were closed up to result in a decrease in circumference for each circular row of expanders. After the expander adjustments were made the stand-off studs were adjusted to the new height which pushed the panels up into the new position. The stand-off studs were still left loose at this point, both at the stud-to-panel attachment and at the stud-to-ring attachment (except for the top nut which maintained the height of the stud). The action of the stand-off studs on the surface duplicates the action of the expanders and also the action of the cable guides. The situation is redundant, does not lend itself to any analytical process, and the interaction must be resolved by judgment.

In this case it was judged reasonable to allow the stand-off studs to dictate the panel location and to use expander loads which, by inspection, appeared to be compatible with this surface location. The types of adjustments provided, their location, and the way they act, do not appear consistent with the concept of the homogeneous shell which was the basis of the surface design.

The redundancy of the surface adjustments surely must result in load distributions throughout the surface that vary markedly from those load distributions assumed in the design. These variations are probably not too significant as long as the loads introduced remain within elastic limits.

An examination of the action of an expander assembly is probably in order. If we visualize a homogeneous metal hemisphere, we can use it to represent the reflector. We then subject a small area of the surface to a heat load such as the flame from a torch or heat from a heat lamp. This will result in an oil can dent in the surface when viewed from inside the hemisphere. The action of an expander is similar. By increasing the pressure of the expander on the adjacent panel edges, or expanding the expander, we produce the same effect. Reducing the pressure on the expander, or closing it up, has the same effect as cooling a small area of the hemisphere; and the surface flattens or appears to rise when viewed from inside the hemisphere or reflector. This effect is strictly local and occurs only in the vicinity of the flame in the case of the hemisphere, or the expander in the case of the reflector. Areas away from the disturbance are unaffected and retain their normal contour. It is, in fact, quite possible to raise a local bump on the reflector by tightening up on a single expander.

When we consider the adjustment of large areas, the effect of expander adjustment is quite different. The effect of increasing the load in many expanders in adjacent panels, and in adjacent expander rows, is to increase the circumference of the reflector in that area, causing the area to move outward when viewed from inside the reflector. It may appear contradictory that the amount of expander adjustment required to raise a local area 0.100 inch is much greater than the amount of adjustment required to raise a large area the same amount, but it is nevertheless true, depending somewhat on where this area is located in the reflector.

The greater portion of the reflector area which required adjustment depended upon expander adjustments for accomplishment of the desired goal. Under these circumstances, it was not possible to observe the effects of the adjustments by observation with the theodolite, since the movement of large areas involves the action of many expanders. The results of expander adjustment are not observable until after all expanders have been adjusted. The procedure used was to prepare a table of expander adjustments and send the adjustment crew aloft to perform the adjustments in accordance with the table. When the crew was finished and down off the reflector, a set of theodolite readings was taken for the targets in the affected area and for the area immediately around it. These results were then compared with the table of theodolite readings derived from the best-fitting programs. New expander adjustment tables were then prepared and the process repeated. The same procedures also applied to stand-off stud and cable guide adjustments. In a sense the adjustment of the surface was uncontrolled since none of the adjustments were observed by the theodolite at the time they were performed. On the other hand this method of operation permitted more efficient use of the rigging crew, since many adjustments could be performed at the same time. The actual adjustments of the surface proceeded quite rapidly.

At the outset of the adjustment program, the radome space heaters were adjusted so that the water supply to the heat exchangers was held between 140° and 150°F. This was done to reduce the large amounts of very hot air introduced into the radome. Early in the adjustment program, during a weekend, the heating system failed and it was necessary to have it serviced. Either through a failure in communications, or a lack of understanding of the problems involved,

the heaters were restored to operation by the servicing personnel with the water temperature raised above 160°F. The heating system is designed so that the heaters operate in groups; the greater the heat requirement, the more groups of heaters come into action. During October the heat demand is such that only one group of heaters is required to meet the demand. The increase in water temperature raised the output of the then-operating heater bank, and this bank was discharging at one side of the concrete support tower. The effect of all this was to cause a bending of the concrete tower resulting in about a 25-second-of-arc tilt at the reflector. It is of interest that almost a week was required for the radome and antenna to reach equilibrium under these new conditions.

The impact of the increased heater temperature and resulting tower tilt on the adjustment program was to destroy the relationship between gravity, the reflector, and the antenna measurement coordinate system. It was at this point that the flying saucer theodolite mount came into its own. Certain of the row D targets had in the past been observed to be reasonably stable under various thermal influences. These targets were selected as references, and by using the flying saucer the theodolite was tilted to produce the same readings as had been recorded for these targets earlier in the program. It was then necessary to take a complete data set to compare with previous data. The gravity reference was of course useless now, and frequent checks of the selected row D targets were substituted, as a check on the stability of the new setup. For a little over a week following the change in the heating conditions it was necessary to relocate the theodolite perhaps twice a night. After that period the situation reached equilibrium once more and the theodolite and mount remained fairly stable. The ability to tilt the theodolite about its optical center, derived from the flying saucer mount, proved to be a most valuable asset. Considerable time would otherwise have been lost in establishing a new reference coordinate system. The computer program for analyzing the data had the gravity direction as one reference. Although the theodolite and measurements could have continued from the new tilted position it would have been necessary to resubmit all the previous calculations to transfer them to the new gravity reference. The tilting of the theodolite by the flying saucer to produce the original relationship of theodolite to reflector, acted to produce an artificial gravity direction and preserved the usefulness of all the previous calculations. At the end of the adjustment operation it was, of course, necessary to make measurements to correlate this artificial gravity direction to the true gravity direction for antenna pointing purposes.

Given sufficient time (days) to stabilize to its environment, the theodolite used for these measurements proved to be a remarkably reliable and repeatable instrument, even using different instrument operators.

As the surface began to converge to the desired shape, it became necessary to secure all the stand-off studs prior to each set of measurement readings in order to obtain a precision consistent with the desired surface tolerance. Further adjustments then required that certain stand-off studs be loosened to provide a path for a departing out-of-tolerance "bubble." This was usually done by loosening the stud-to-panel attachment only, but in some cases it was necessary to loosen the bottom nut on the stud-to-ring attachment also.

About half way through the adjustment program the center portion of the reflector had improved to the point where the deviations from the best-fit paraboloid in the outboard panels were considerably larger than those inboard. It appeared that enough time would be available, and that some touching up of the worst outboard areas would more quickly reduce the rms of the total reflector and produce a more uniform product than equivalent time and effort spent inboard.

Consequently, the adjustment crew was moved into the outboard panels, and, for the moment, work was stopped inside the 60-foot diameter. It was not the intent of this program to adjust any of the outboard panels, since the study had shown that this portion of the reflector had an adequate tolerance as it was. Therefore, none of the adjustments had been released during the preparation phase. However, since the work was proceeding rapidly, it was possible to obtain greater improvement of the entire reflector by spending some time on the adjustment of the outboard panels. The outboard adjustments made were accomplished by releasing only those expander pins and stand-off studs necessary to improve the areas in question. By the time the outboard area was finished, about 60 percent of the area had been adjusted and the effort amounted to very nearly a complete adjustment program for the entire reflector.

Having improved the worst out-of-tolerance areas in the outboard panels, work returned to squeezing as much out of the inboard panel as possible during the remainder of the schedule. As the out-of-tolerance areas reduced in size and magnitude, it became increasingly more difficult to eliminate them. Considerable time spent in adjustment produced only slight improvements in the rms.

For slight changes in contour, on the order of 0.025 to 0.030 inch, the panels exhibited a large amount of hysteresis. It was necessary to coerce the panels in the intended direction by either pushing up on them from the nets below, or by pulling down with a large suction cup. Once they had assumed the new position, they tended to stay there. A few small areas, probably because of deviations built into the panels at manufacture, resisted all efforts to conform to the new contour. Figures 20 and 21 show deviations from the best-fit paraboloid before and after adjustment, respectively; most of the areas shown in the center 60-foot diameter in Fig. 21 are those that resisted change to the new contour. Adjustment of the surface panels was terminated at the end of the sixth week, and the operation moved to acquiring final readings, securing adjustments, and making measurements for locating the secondary reflector in the proper position.

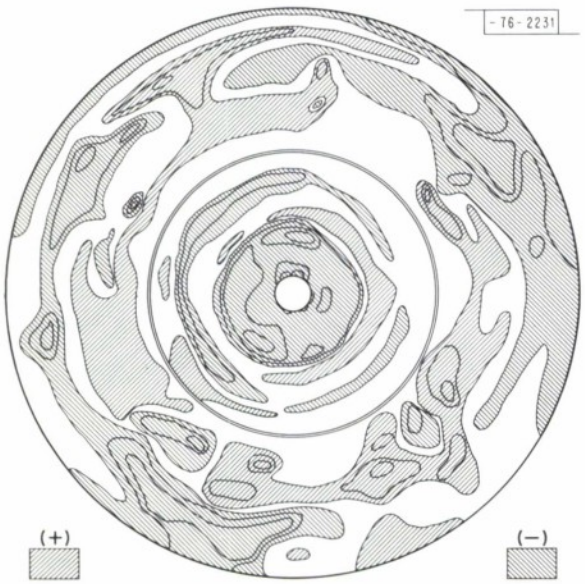

Fig. 20. Deviations from best-fit paraboloid before adjustment (rms = 0.037 inch; contours of deviation at 0.025-inch intervals).

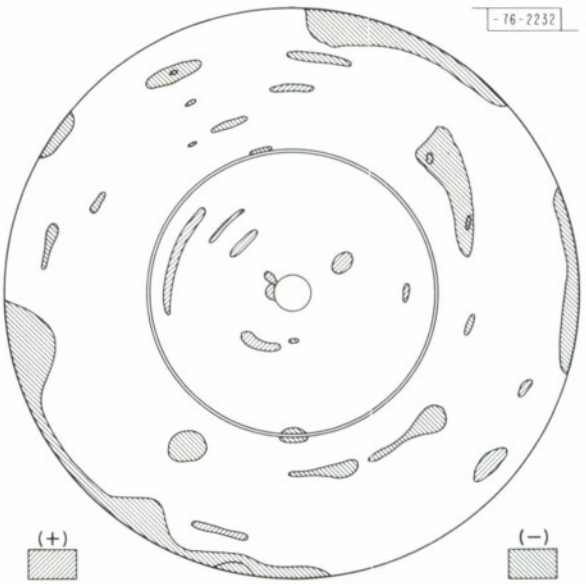

Fig. 21. Deviations from best-fit paraboloid after adjustment (rms = 0.017 inch; contours of deviation at 0.025-inch intervals).

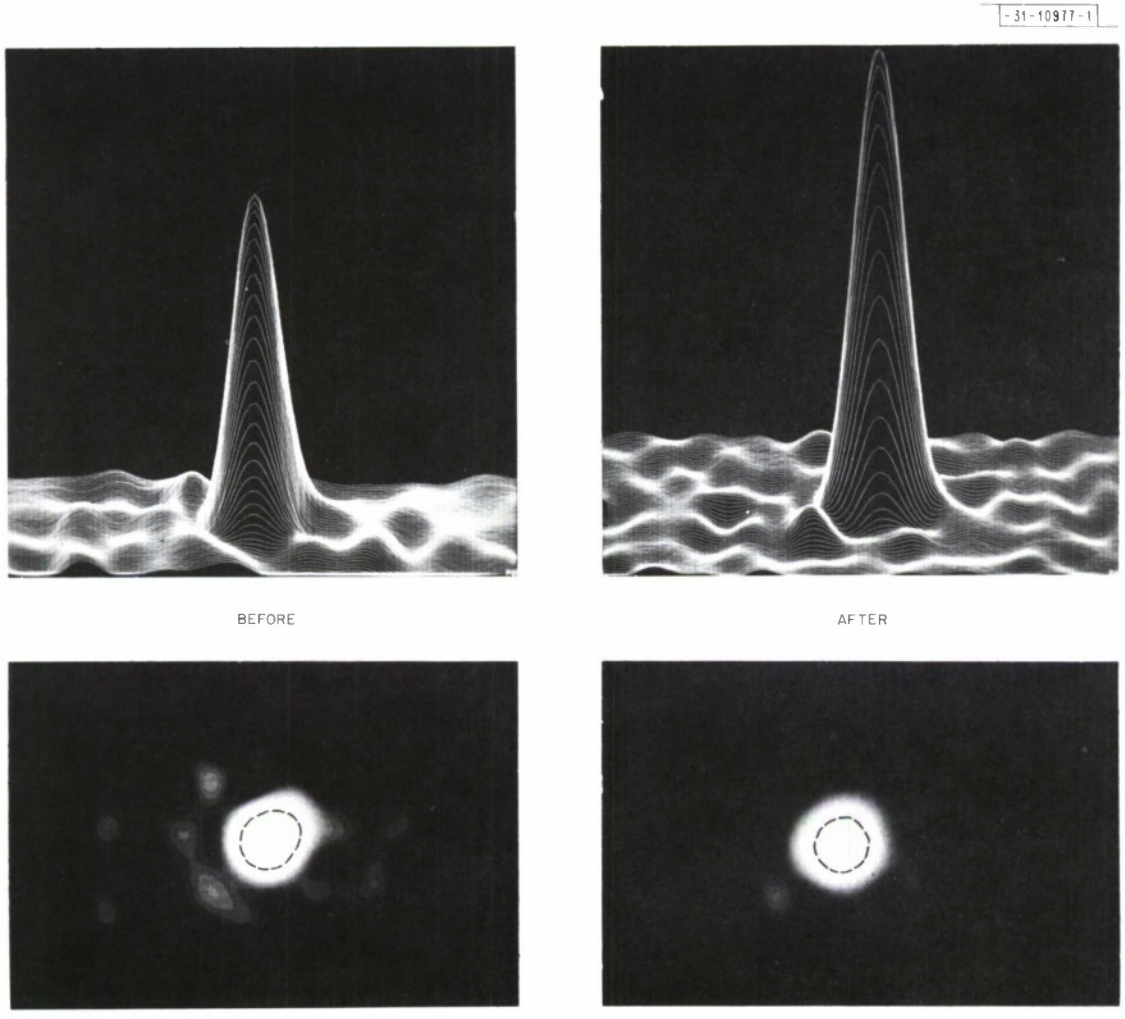

--- INSTRUMENTAL HALF-POWER BEAMWIDTHS
ANTENNA PATTERN MEASURED WITH RADIO SOURCE VIRGO A
FREQUENCY 15.5 GHz
WAVELENGTH 2 cm

Fig. 22. Improvement in performance of Haystack antenna following Fall 1967 adjustments.

At the outset of the adjustment effort it was assumed that the panel centers had been properly located with respect to the panel edges even though the measurement equipment had been in error. Adjustment of panel centers could only be accomplished by use of the tension cable guides. By pushing downward against the tension cables, these could exert an upward force against the panel centers. The assumption was good, and once the panel edges were properly located only a very few panel centers needed adjustment. In some of these cases panel centers were too high. These had to be left in this condition since the adjustment of cable guides could not produce any downward force to correct these deficiencies. The only alternative was to readjust the panel edges in the affected panel to divide the error between panel center and edges.

The most time-consuming operation in the adjustment program was data taking. Data taking consumed 75 to 80 percent of the actual time spent on the project. After each adjustment session it was necessary to take and process data to evaluate results. Sometimes this would consist of data taken for local areas in which adjustments were made, and at other times the data set would consist of a complete review of the reflector surface to evaluate the total result.

VIII. RESULTS OF ADJUSTMENT PROGRAM

The actual physical adjustments to the reflector surface were terminated at the end of the sixth week. At this point the rms of the best-fitting paraboloid was 0.017 inch. Further improvement over this number was considered possible; however, this value was more than adequate for the purposes for which the antenna would be used, and to decrease it significantly would have taken considerable additional time. The final week of the 7-week schedule was reserved for taking final data for the record, taking measurement data for locating the secondary reflector, repositioning the secondary reflector, locking up all adjustments, and generally preparing the reflector for a return to operation.

When the reflector was first considered for an adjustment program, the daytime rms of the best-fitting paraboloid was 0.055 inch. This was reduced during the study phase of the program, by the painting of the splice plate, to about 0.044 inch rms. The adjustment program then reduced these values to 0.017 inch rms for nighttime conditions, and, except for very extreme summer day conditions, the rms is not expected to exceed 0.025 inch for the sunny day condition (Figs. 20 and 21).

Because of the gravity deflections of the reflector, the quality of the surface was optimized for use between elevation angles of 20 and 70 degrees above the horizon, and the 0.017 inch rms value applies for an elevation of 45 degrees. This value does not change appreciably for the 20 to 70 degree range. Below an elevation of 20 degrees the effect of deflection becomes quite pronounced, and near the horizon the best fitting rms is probably close to 0.025 inch. Near the zenith the rms is less than this value, about 0.019 inch.

Radio frequency measurements taken since the adjustment of the surface, and still in progress and under evaluation at the time of this writing, bear out the improvement to the surface.

So far, a 1.5-db increase in gain has been observed at 15.5 GHz (Fig. 22). At 35 GHz, prior to the adjustment program, no defined beam was formed. After adjustment, pattern measurements made at 35 GHz show a well-defined beam with the highest side lobe 9 db down from the main beam (Figs. 23 and 24). These 35-GHz patterns were taken at the horizon and therefore suffer somewhat from the degradation of the surface due to gravity deflection near the horizon.

It is also known at this time that the secondary reflector was not correctly adjusted for tilt during these measurements. Some further improvement can therefore be considered reasonable for operation in the optimized range of 20 to 70 degrees in elevation.

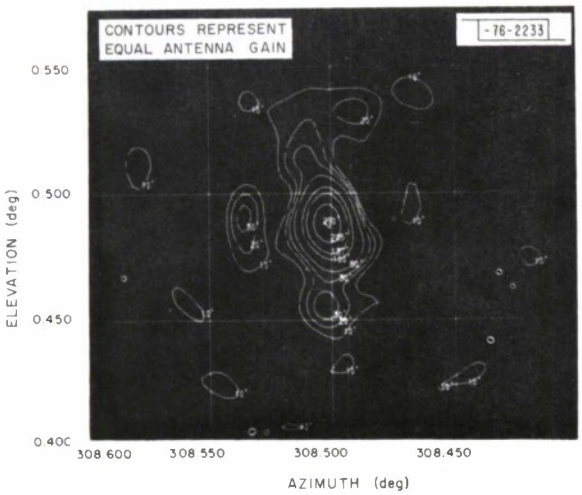

Fig. 23. Preliminary 35-GHz pattern map of Haystack antenna.

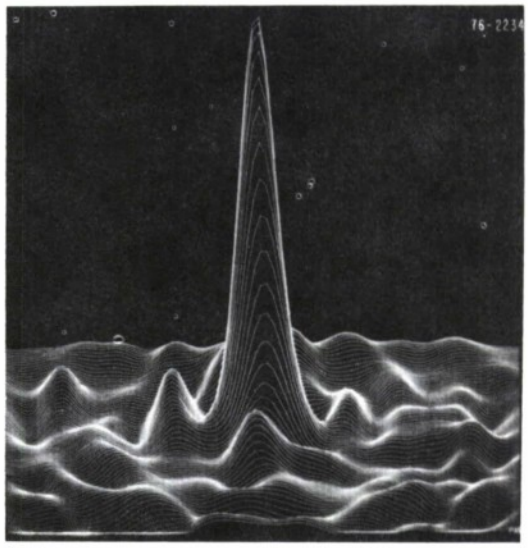

Fig. 24. Ruled surface presentation of 35-GHz pattern map of Haystack antenna.

ACKNOWLEDGMENTS

The Haystack study and adjustment programs were founded upon a base built from the contributions of many people, both from inside and outside the Laboratory. It would be impractical to attempt to list all the people who have made contributions having some direct or indirect bearing on this effort. However, recognition is due the following people for their more direct contributions to the study and adjustment of the Haystack reflector.

Lincoln Laboratory

G. W. Catuna
W. R. Fanning
F. A. Folino
M. L. Meeks
E. B. Murphy
J. B. Paddleford
J. Ruze

Simpson Gumpertz & Heger

H. A. Simpson
M. S. Zarghamee
I-Ming Shen

North American Rockwell Corporation, Columbus Division

J. Rutledge
J. Banche

Special mention is made of the participation of Calvin T. Frerichs, formerly of Lincoln Laboratory, who worked in partnership with the author in the management of this project up to the time of his departure during the actual adjustment phase of the program.

DOCUMENT CONTROL DATA - R&D

(Security classification of title, body of abstract and indexing annotation must be entered when the overall report is classified)

1. ORIGINATING ACTIVITY *(Corporate author)* Lincoln Laboratory, M.I.T.	2a. REPORT SECURITY CLASSIFICATION Unclassified 2b. GROUP None

3. REPORT TITLE

Haystack Antenna Reflector Surface Improvement Program

4. DESCRIPTIVE NOTES *(Type of report and inclusive dates)*

Technical Note

5. AUTHOR(S) *(Last name, first name, initial)*

Stuart, David G.

6. REPORT DATE 29 January 1968	7a. TOTAL NO. OF PAGES 36	7b. NO. OF REFS 4
8a. CONTRACT OR GRANT NO. AF 19(628)-5167 b. PROJECT NO. 649L c. d.	9a. ORIGINATOR'S REPORT NUMBER(S) Technical Note 1968-7 9b. OTHER REPORT NO(S) *(Any other numbers that may be assigned this report)* ESD-TR-68-8	

10. AVAILABILITY/LIMITATION NOTICES

This document has been approved for public release and sale; its distribution is unlimited.

11. SUPPLEMENTARY NOTES None	12. SPONSORING MILITARY ACTIVITY Air Force Systems Command, USAF

13. ABSTRACT

A comprehensive program of study and measurement of the Haystack reflector has been conducted, resulting in a performance improvement of approximately 40 percent. A stochastic approach to data taking and analysis combined with the benefits of an on-site computer, provided analytical control of the adjustment operation, and at the same time assured a short reaction time between receipt of the raw data and completion of a detailed analysis of the surface condition. Conventional measurement equipment was used to control the adjustment operation with special attention given to extracting the utmost precision from each device.

The rms deviation of the best-fitting paraboloid was reduced from 0.037 to 0.017 inch in the course of the adjustments and corresponding increases in antenna performance have been observed.

14. KEY WORDS

Haystack reflector
antenna performance
reflector adjustments
stochastic analysis