AD

AD 666781

Research and Development Technical Report
ECOM-0630-F

SINGLE FREQUENCY F_1, F_1 REPEATER

FINAL REPORT

BY

G. JOHNSTON, . REDMOND, AND G. THOMSON

MARCH 1968

Sponsored by

ADVANCED RESEARCH PROJECTS AGENCY
ARPA ORDER 694

ECOM

UNITED STATES ARMY ELECTRONICS COMMAND · FORT MONMOUTH, N.J.

CONTRACT DAAB07-67-C-0630

AIRBORNE INSTRUMENTS LABORATORY
A DIVISION OF CUTLER-HAMMER
DEER PARK, NEW YORK 11729

DISTRIBUTION OF THIS DOCUMENT IS UNLIMITED

Reproduced by the
CLEARINGHOUSE
for Federal Scientific & Technical
Information Springfield Va. 22151

DDC
RECEIVED
MAR 26 1968
C

60

TECHNICAL REPORT ECOM-0630 F March 1968

SINGLE FREQUENCY F_1, F_1 REPEATER

Final Report

1 July 1967 to 30 November 1967

Contract No. DAA B07-67-C 0630

Prepared By

G. Johnston, K. Redmond, and G. Thomson

Airborne Instruments Laboratory
A Division of Cutler-Hammer, Inc.
Deer Park, New York 11729

For

U. S. ARMY ELECTRONICS COMMAND, FORT MONMOUTH, N. J.

Sponsored By

Advanced Research Projects Agen y
ARPA Order 694

DISTRIBUTION OF THIS DOCUMENT IS UNLIMITED

ABSTRACT

The objective of this study was to determine the feasibility of new technical concepts inherent in the design of F_1, F_1 repeaters. This technical report covers two novel versions of small F_1, F_1 radio repeaters designed for use with FM tactical transceivers. Both developmental models are linear, single frequency repeaters (F_1, F_1), one is high gain (50 db); the other wide-band (500 kHz).

The design of these repeaters utilizes the concepts of hybrid isolation and precise antenna matching. The results indicate that true F_1, F_1 radio repeaters are feasible.

Included are detailed discussions of:

1. F_1, F_1 repeater concept,
2. Antenna matching and broadbanding techniques,
3. Hybrid isolation,
4. Amplifier and filter development,
5. Tests and evaluation,
6. Miniaturization,
7. Future trends and goals.

TABLE OF CONTENTS

		Page
I.	Introduction	1
II.	General F_1, F_1 Repeater Considerations	5
	A. Analysis	5
	B. Experimental Data for F_1, F_1 Repeater	8
III.	Special Component Techniques and Developments	11
	A. Antenna and Matching Networks	11
	B. Hybrid and Terminations	13
	C. Amplifier and Filter	15
	D. System Tests and Evaluation	16
IV.	Conclusions and Recommendations	23
	A. Narrow-Band Operation	23
	B. Wide-Band Operation	23
	C. Miniaturization	24
Appendixes		
	I--Antenna Matching Analysis	31
	II--Antenna Impedance Data	37
	III-Hybrid Analysis	55
References		57

LIST OF ILLUSTRATIONS

Figure		Page
1	High-Gain Repeater, Block Diagram	2
2	Wide-Band Repeater, Block Diagram	3
3	Repeater, Block Diagram	6
4	Equivalent Flow Diagram	6
5	Maximum Repeater Amplifier Gain vs Antenna Mismatch for F_1, F_1 Repeater	7
6	Wide-Band Repeater Electronic Package	9
7	Wide-Band Repeater Electronic Package (Layout)	10
8	Monopole Antenna Outline	12
9	Discone Antenna Outline	14
10	Hybrid Circuit Diagram	15
11	30-MHz Filter, Schematic	17
12	Hybrid Isolation Test	18
13	High-Gain Repeater System Test (Bench	19
14	High-Gain Repeater System Test (Field)	19
15	Wide-Band Repeater System Test (Field)	21
16	Microminiature Tuned Amplifier	25
17	Microminiature 30-MHz Tuned Amplifier	27
18	High-Gain Microminiature Amplifier	29
19	Cylindrical Antenna	32
20	Equivalent Circuit for Short Antenna	33
21	Normalized Reflection Coefficient vs Antenna Length	35
22	Antenna with Double-Tuned Matching Section	36
23	Hybrid for Coupling Repeater Output to Receiver Input	36
24	Smith-Chart Plot of Monopole Antenna Impedance vs Frequency	39
25	Resistance and Reactance vs Frequency for Monopole Antenna	40
26	Monopole Antenna Equivalent Circuit	41
27	Monopole Antenna and Basic Matching Network Equivalent Circuit	42
28	Smith-Chart Plot of Monopole Antenna and Basic Matching Network vs Frequency	44
29	Resistance and Reactance vs Frequency for Monopole Antenna and Basic Matching Network	45
30	Final Matching Network for Wide-Band Receiver	46
31	Smith-Chart Plot for Monopole Antenna and Two-Pole Matching Network vs Frequency	48

Figure		Page
32	Resistance and Reactance vs Frequency for Monopole Antenna and Two-Pole Matching Network	49
33	Maximum Amplifier Gain vs Frequency (Based on Antenna VSWR Measurements)	50
34	Smith-Chart Plot for Discone Antenna Impedance vs Frequency	52
35	Resistance and Reactance vs Frequency For Discone Antenna	53
36	Hybrid Circuit	56

SECTION I
INTRODUCTION

The tactical value of short-range, man-pack portable, FM two-way voice communication radio sets is frequently impaired by jungles as well as rough and hilly terrain typical of present-day combat situations. The absorption and scattering of radio signals by dense jungles and the shadow effect of hills reduce the effective range of this VHF equipment to a small fraction of its free space range. A strategically deployed repeater can enhance and extend the performance of these radio sets by providing transmission paths around obstacles and over the jungle. To be of tactical value such a repeater must be operationally simple, light in weight, and easily deployed.

Airborne Instruments Laboratory (AIL), a Division of Cutler-Hammer, Inc., has recognized the need for radio repeaters to improve tactical communications in combat areas. A radio signal repeater has been designed and constructed which receives, amplifies, and retransmits a signal without shifting the signal to another frequency channel, hence its name, "F_1, F_1 Repeater."

As an example, such a repeater might be hand-carried by a combat patrol and, in their advance, planted on a hilltop with a battery supply sufficient for one or two days of operation. This hilltop repeater would extend the communication capability into otherwise inaccessible places. Later if the patrol should return through the same area, the repeater would be retrieved. If the repeater could not be retrieved, it could be destroyed by a timed self-destruct mechanism.

At the present time, the repeater requirement can be met by combining two radio sets such as the AN/PRC-25 through a special junction box and operating each leg of the relay at different frequencies (F_2, F_1). However, this arrangement is operationally cumbersome and expensive, and requires that three additional pieces of equipment be carried by the patrol. Using different frequencies for each leg of the relay creates operational complexities by requiring procedures for switching between the relay frequencies on both the outgoing and return trip of the patrol. In areas of high radio density, where spectrum conservation is desirable, two frequency repeaters may prove cumbersome. A self-contained, lightweight repeater, operating within the same frequency channel on both legs of the relay presents a straightforward solution to this problem.

The two repeaters designed and constructed by AIL are simple, compact, and true linear F_1, F_1 devices. One repeater is a narrow band (50 kHz), high gain (50 db) unit which utilizes a crystal filter in the amplifier leg as shown in Figure 1. The other is a wide band (500 kHz), medium gain (37 db) unit with a tuned amplifier between receiving and transmitting ports of the hybrid, as shown in Figure 2. In both these repeaters, the received signal is amplified and retransmitted at the same frequency. To permit single antenna operation, the transmitted signal leakage into the amplifier input is reduced by use of a carefully balanced hybrid to isolate the low-level receiving port from the high-level transmitting port. A well-matched antenna is connected to a third port and the final port is terminated. To avoid oscillations, the amplifier gain cannot exceed the isolation between the transmitting and receiving ports.

Hybrid performance is critical in repeaters of this type, therefore a brief description of the problems encountered is presented here. The hybrid used in the F_1, F_1 repeater must isolate the input and output of the amplifier to prevent oscillation. In addition, it must permit signals received by the antenna to be coupled to the input of the amplifier while simultaneously coupling the signal from the output of the amplifier to the antenna. Normally in a hybrid, exceptionally low VSWR is required

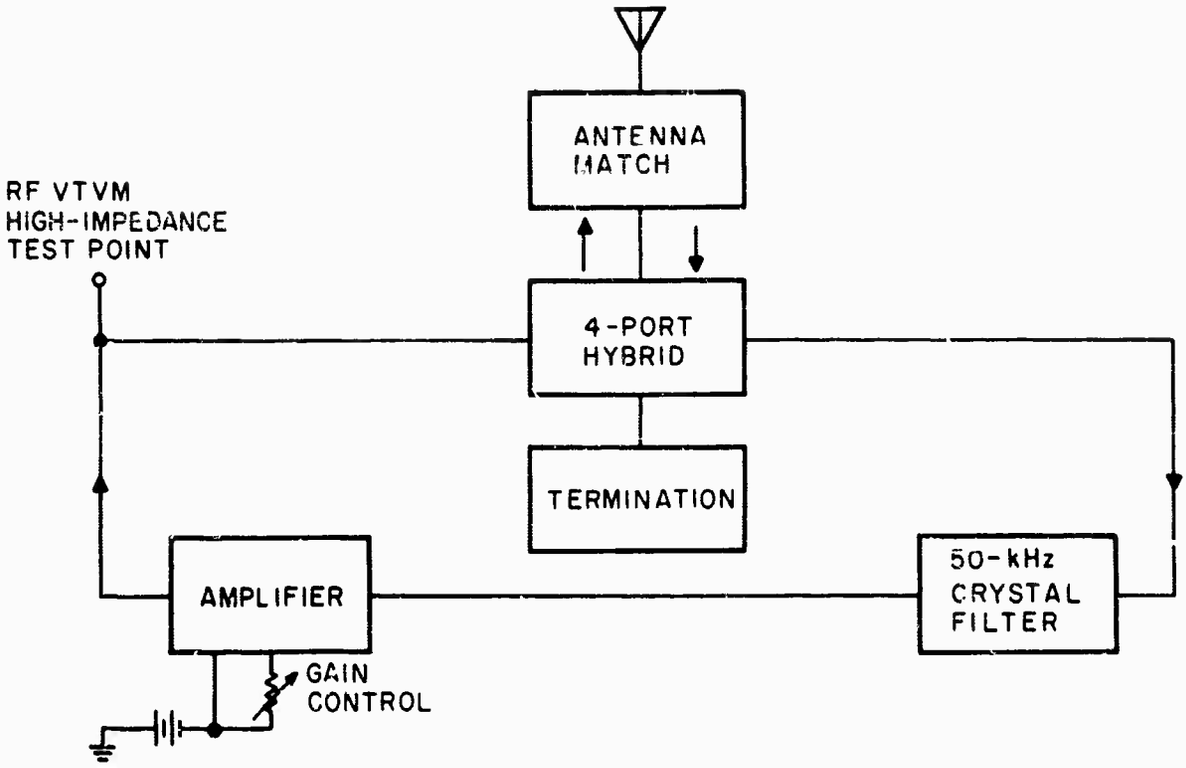

FIGURE 1. HIGH-GAIN REPEATER, BLOCK DIAGRAM

for the termination to obtain high isolation. Although great care has been taken to provide this low VSWR termination, the hybrid has been designed with special adjustments which can provide high isolation even when the termination VSWR is above the minimum theoretical level for a desired isolation. This adjustment circuit also permits higher gain over a wider bandwidth than is normally possible with a standard hybrid.

As can be seen from this discussion, there are several basic problems to be overcome if stable operation is to result. Each of these problems, that is, antenna and amplifier VSWR, hybrid isolation, antenna reflection coefficient and system bandwidth will all be discussed in detail in the sections to follow.

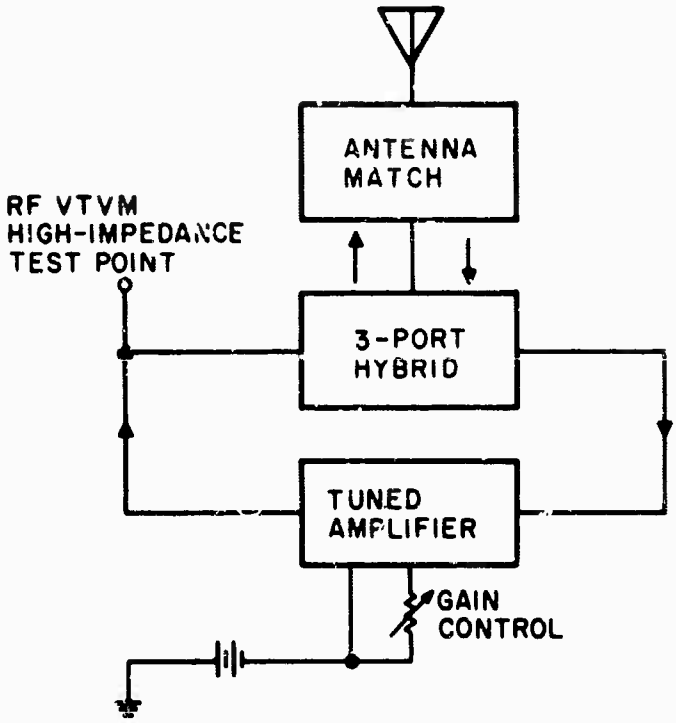

FIGURE 2. WIDE-BAND REPEATER, BLOCK DIAGRAM

SECTION II

GENERAL F_1, F_1 REPEATER CONSIDERATIONS

Figure 3 shows a block diagram of the simple F_1, F_1 repeater. It consists of an antenna, an amplifier, and a miniature hybrid. This repeater is basically a one-port amplifier, designed to retransmit the received signal in exactly the same frequency. This section contains an analysis of the stability of this system. Relations between antenna VSWR, hybrid isolation, and amplifier gain are derived.

A. ANALYSIS

The equivalent flow block diagram of this repeater is shown in Figure 4. The 3-db hybrid losses, hybrid feedthrough, and effects of antenna mismatch are shown. Hybrid coupling coefficients are labeled K_{12}; that is, under impedance matched conditions the relative voltage appearing at port 2 is due to voltage at port 1 (and vice versa). The closed loop response of the system is given by:

$$H = \frac{\frac{1}{2}G}{1 + G\left(B + \frac{\Gamma}{2}\right)} \tag{1}$$

where

G = amplifier gain,

B = hybrid feedthrough,

Γ = antenna voltage reflection coefficient.

If the denominator vanishes, the gain increases without bound and the loop oscillates. The exact behavior of Γ is frequency dependent and determined by the antenna (Appendix I). If the magnitude of the loop gain is made less than unity for all frequencies, then the loop cannot oscillate. If the loop gain is made much less than unity, then the forward gain of the overall repeater is given approximately by (1/2)G. For all phases of G, B, and Γ, a stable repeater is assured if

$$|G|\left[|B| + \frac{|\Gamma|}{2}\right] < 1 \tag{2}$$

or

$$|G| < \frac{1}{|B| + \frac{|\Gamma|}{2}}$$

This maximum value of G is plotted in Figure 5 as a function of Γ for several values of B. This figure shows that very low antenna VSWR is needed to realize the full isolation capability of the hybrid. In fact, the abscissa of this plot might have been labeled "Equivalent Hybrid Isolation," thereby more generally describing the effect of hybrid termination VSWR upon hybrid isolation.

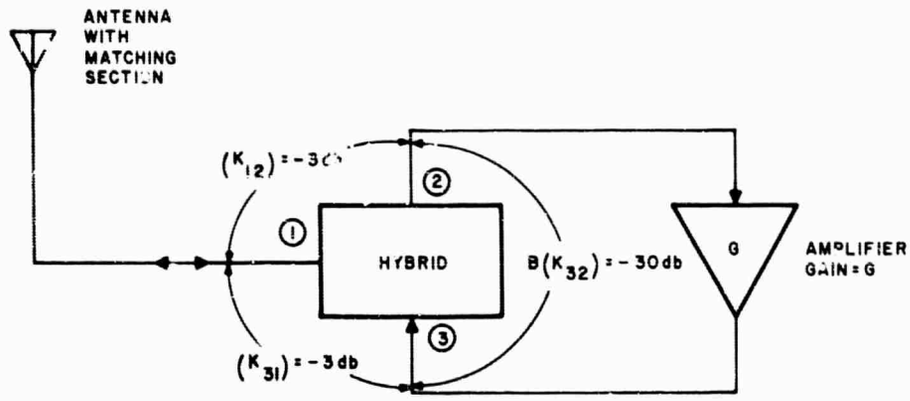

FIGURE 3. REPEATER, BLOCK DIAGRAM

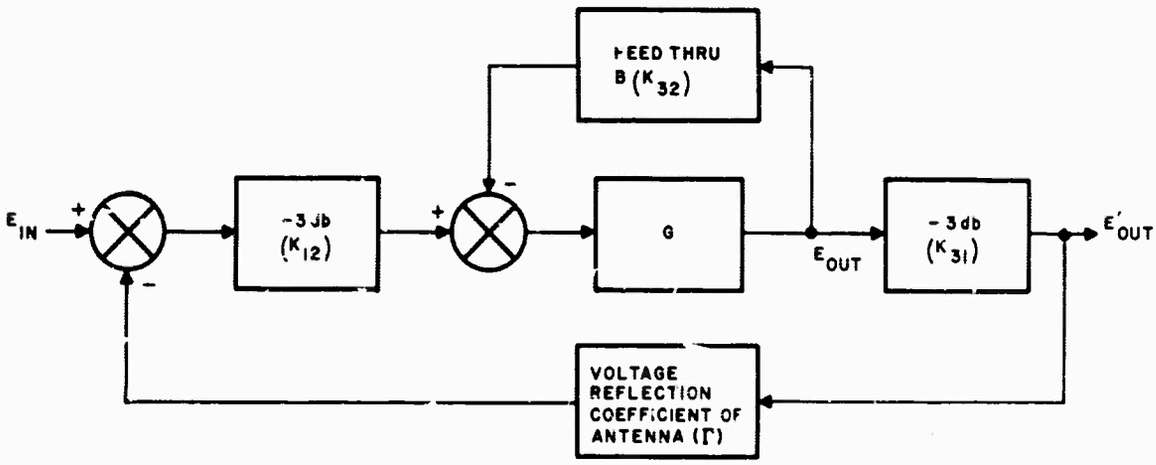

FIGURE 4. EQUIVALENT FLOW DIAGRAM

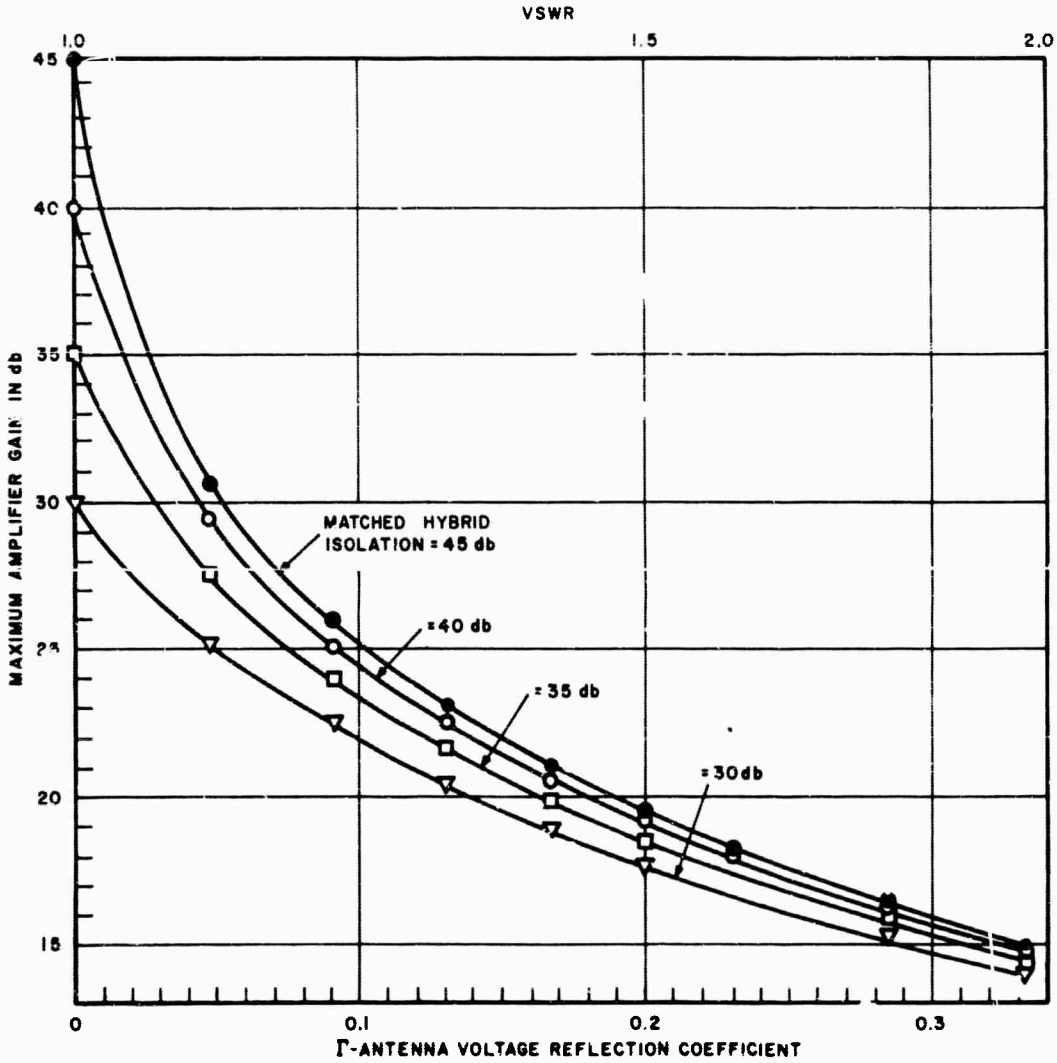

FIGURE 5. MAXIMUM REPEATER AMPLIFIER GAIN VS ANTENNA MISMATCH FOR F_1, F_1 REPEATER

We note that if the product in equation 2 is much less than unity, then $H \approx G/2$. The sensitivity of the repeater is limited by the noise figure of the amplifier. The hybrid has the effect of introducing a 3-db loss in the signal path. As a result, the noise figure of the repeater is 3 db greater than that of the amplifier alone. Thus, if the amplifier has a noise figure of 10 db, the repeater will have an overall noise figure of 13 db.

B. EXPERIMENTAL DATA FOR F_1, F_1 REPEATER

1. HIGH-GAIN REPEATER

A complete breadboard model repeater was assembled and tested. The circuit configuration is shown in Figure 1. The amplifier gain was controlled by means of a separately applied DC bias to the AGC bus. The hybrid termination and antenna matching network were tuned for maximum isolation in this configuration.

With the 50-kHz filter, 51-db repeater gain was achieved. These gains were measured by noting the maximum amplifier gain which could be achieved before the loop oscillated, and then subtracting the hybrid and circuit loss. Thus, these numbers are indicative of the effective isolation achieved with the hybrid terminated in the antenna.

2. WIDE-BAND REPEATER

A complete prototype model repeater, designated AIL Model 2282, was constructed, tested, and delivered to USAECOM under this contract. The circuit configuration is shown in Figure 2, and the electronic package, less the antenna, is shown in Figures 6 and 7. This repeater has been designed to function without any operator controls. An on-off switch has been provided to allow conservation of battery power when tests are not being conducted.

The operating characteristics of the repeater are as follows:

Antenna gain	0 db
Center frequency	31.15 MHz
Bandwidth (3 db)	0.5 MHz
Noise figure	8.5 db
Unsaturated gain	15 to 40 db, adjustable
Maximum power output	+6.5 dbm

The data and performance of both the high-gain and wide-band repeaters have shown the feasibility of receiving, amplifying, and retransmitting a signal without shifting to another frequency.

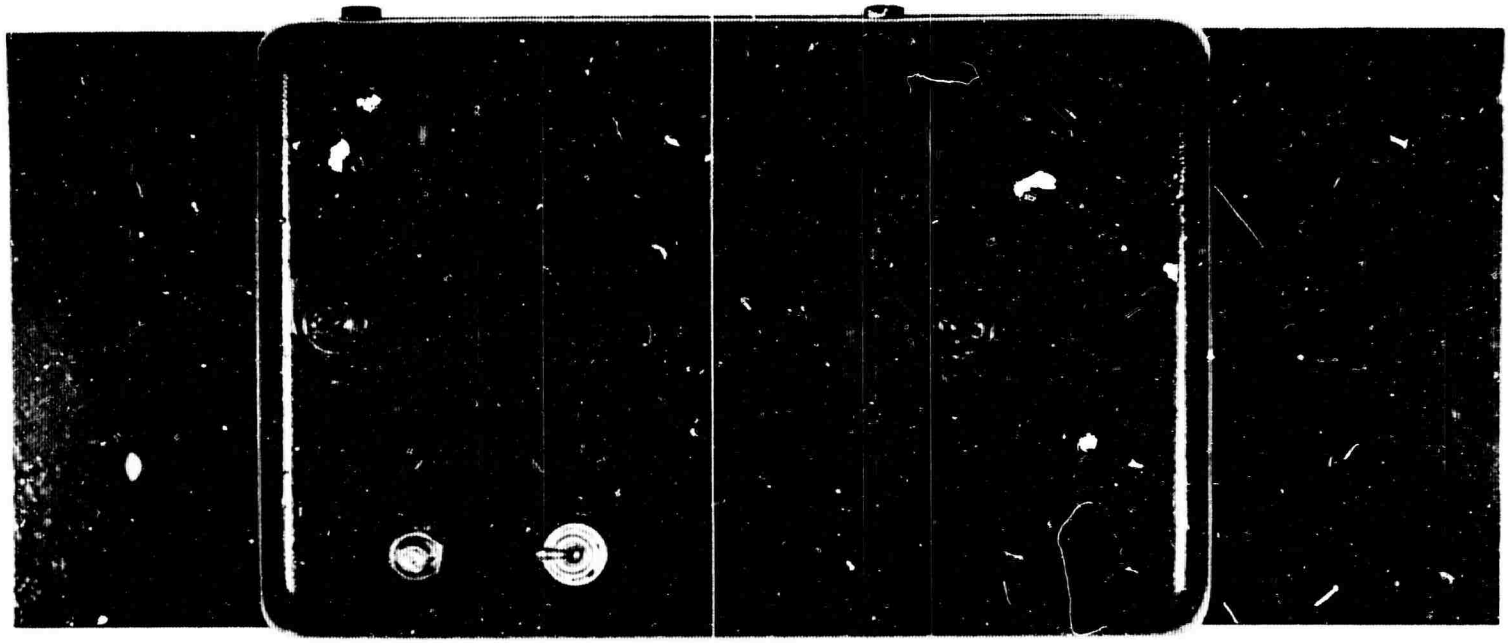

FIGURE 6. WIDE-BAND REPEATER ELECTRONIC PACKAGE

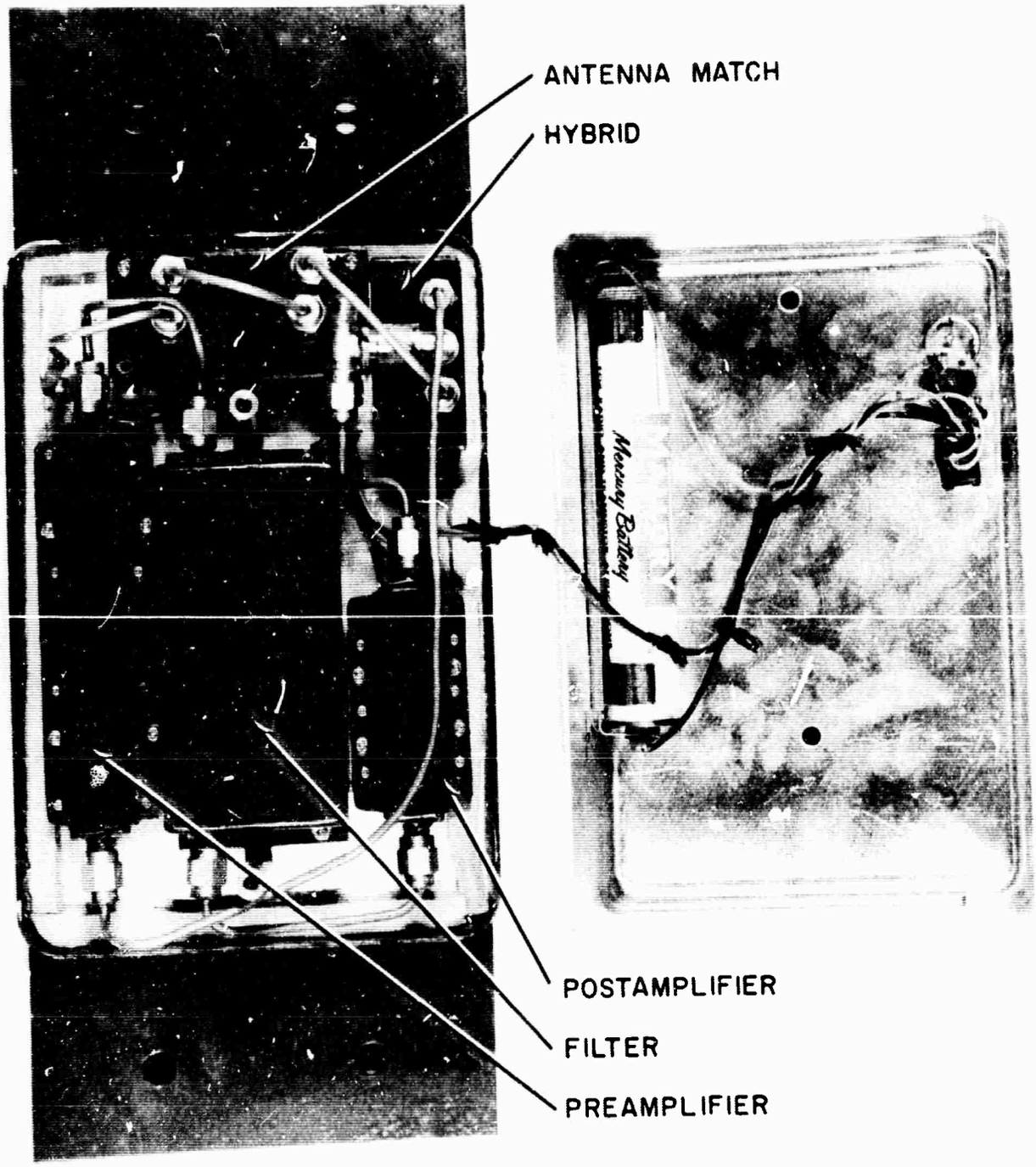

FIGURE 7. WIDE-BAND REPEATER ELECTRONIC PACKAGE (LAYOUT)

SECTION III
SPECIAL COMPONENT TECHNIQUES AND DEVELOPMENTS

A. ANTENNA AND MATCHING NETWORKS

1. ANTENNA MATCHING (HIGH-GAIN REPEATER)

In the system analysis described in Section II A, it was shown that the effective isolation provided by the hybrid is one of the limiting factors for F_1, F_1 repeaters. It was shown that the effective isolation of the hybrid was limited by the VSWR of the antenna. It was also shown that the stability (and thus the maximum permissible gain) of this type of repeater was essentially limited by the VSWR of the antenna. Therefore, antenna mismatch was one of the most serious problems requiring attention during the program.

The developmental antenna chosen by AIL was a commercially available monopole with adjustable ground plane. This particular antenna provides several distinct advantages.

1. Tubular aluminum construction makes the antenna exceptionally lightweight
2. Adjustable ground plane permits operation at any frequency in the 20 to 40 MHz band
3. Ground plane permits elevated operation of the antenna, so that no near field obstacles will affect antenna parameters
4. Monopole characteristics can be easily transformed to those of the dipole for further comparison

The antenna was mounted on a 20-foot pole at the AIL antenna test range. A coaxial cable of one electrical wavelength was fabricated to facilitate measurements of antenna impedance at ground level. Preliminary measurements indicated that the antenna was high Q, and that broadbanding techniques would be required to meet the VSWR requirements. To accomplish this, a 6-inch wide copper screen was attached to the monopole. With this, the antenna (Figure 8) showed more desirable broadband characteristics. The antenna impedance characteristics are plotted in Appendix II.

A one-pole, Butterworth matching network was designed using the antenna impedance as part of the network to obtain the required 50-ohm impedance and VSWR. Measurements indicated that antenna VSWR of less than 1.02 could be maintained over a 50-kHz band at 30 MHz. As noted in Section II A and Figure 5, this is the antenna VSWR necessary to obtain 40-db repeater gain.

2. ANTENNA MATCHING (WIDE-BAND REPEATER)

In an effort to extend the operational bandwidth of the repeater, greater emphasis was placed on further broadbanding the antenna response. This method consisted of adding another pole of the Butterworth matching network. The Butterworth response was chosen because of its maximally flat response across the pass band. With this matching network, an antenna VSWR of less than 1.05 was measured over a 1-MHz bandwidth.

The repeater was now capable of being operated, without a crystal filter, over a much broader frequency range. The impedance characteristics and matching network design are included in Appendix II. This antenna subsystem is the one that is used in the final wide-band repeater.

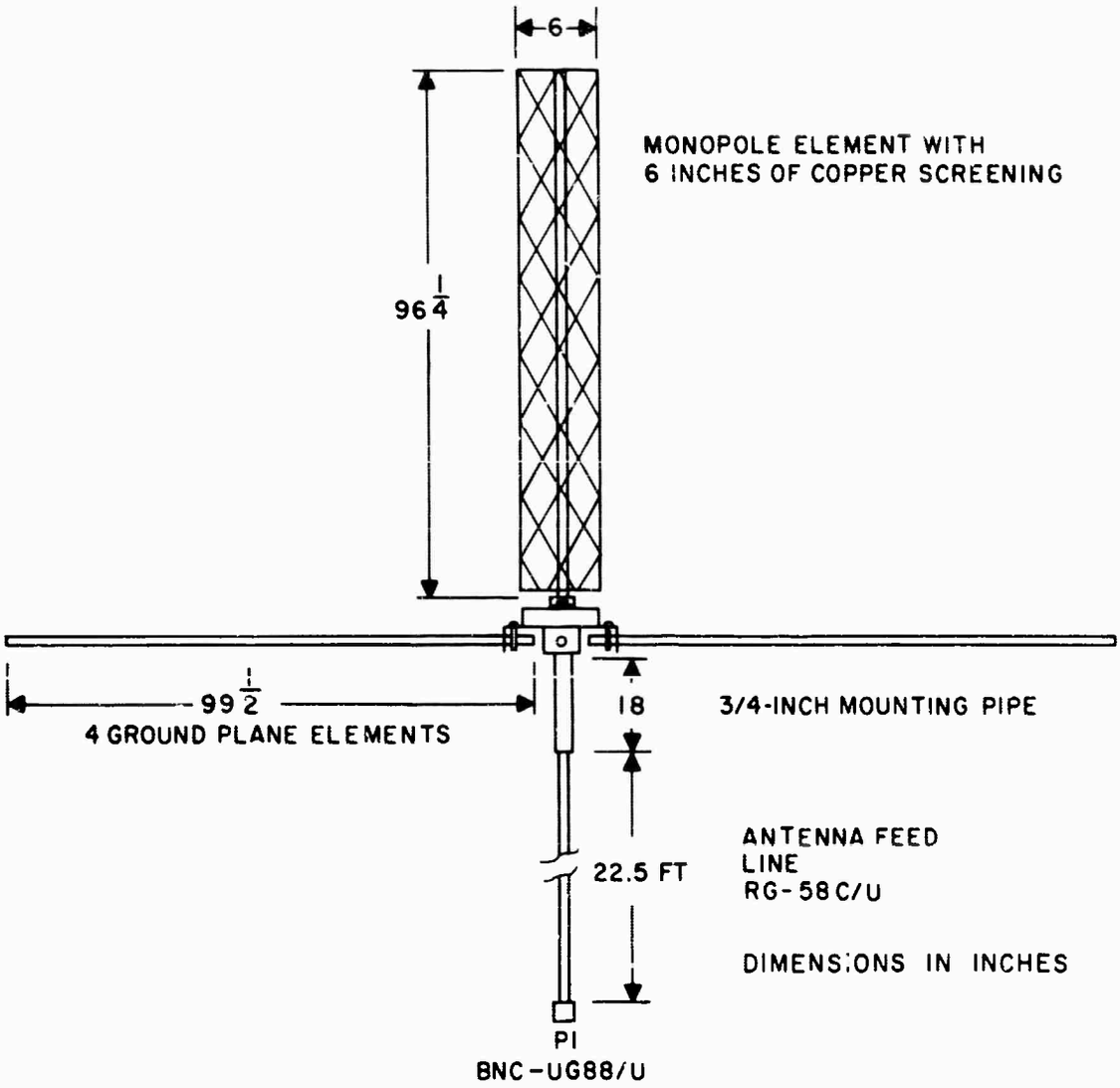

FIGURE 8. MONOPOLE ANTENNA OUTLINE

3. DISCONE ANTENNA

To augment the antenna design, it was felt that investigation of other antenna configurations was necessary. Broadband antenna techniques suggest the use of wide-angle biconical antennas or their derived types, for example, discones.

The discone antenna (Figure 9) was breadboarded and tested at the AIL antenna test range. The antenna dimensions and flare angle were chosen to provide operation in the flat portion of the resistance and reactance curves to gain broader operation (reference 1).

Test results indicate that operation over a bandwidth of approximately 1.5 MHz, with a VSWR of less than 1.05, can be achieved with a suitable matching network (Appendix II). It should be noted that at frequencies in the lower VHF band, these antennas become quite large.

B. HYBRID AND TERMINATIONS

The method by which a hybrid provides isolation from the input to the output of the amplifier while coupling both to the antenna can be explained with the aid of Figure 10. In the diagram a hybrid comprised of four one-quarter wavelength lines is shown. One of the lines has had the connection at one end reversed to provide a 180-degree phase shift, and thus form a three-quarter wavelength line. There are two paths through the hybrid connecting the input and the output of the amplifier. One path length is one-half wavelength, while the second is a full wavelength. Signals, emanating from the output of the amplifier, will arrive from the two paths at the input of the amplifier in an out of phase condition and will cancel. However, signals from the antenna will reach the input of the amplifier, and signals from the output of the amplifier will reach the antenna through the quarter wavelength lines in the hybrid connecting the amplifier to the antenna. Isolation between the input and output of the amplifier normally becomes low when the antenna VSWR becomes high. The hybrid used in this system includes a special network which permits an adjustment to compensate for relative high antenna VSWR. This network also permits automatic adjustment for the change in antenna VSWR over a frequency range. This feature provides high isolation over a relatively wide bandwidth.

The hybrid used for the high gain F_1, F_1 repeater was a commercially available high-isolation hybrid. An adjustment network was added to this hybrid. The hybrid used for the wide-band repeater was built at AIL and contained the hybrid and the adjustment network in a single enclosure. A more detailed discussion of the hybrid circuitry is contained in Appendix III. The performance specifications of the AIL hybrid are as follows:

f_0	30 MHz
Amplitude imbalance	0 db
Insertion loss	0.3 db
Isolation (f_0)	55 db
Isolation (BW = 0.5 MHz)	47 db

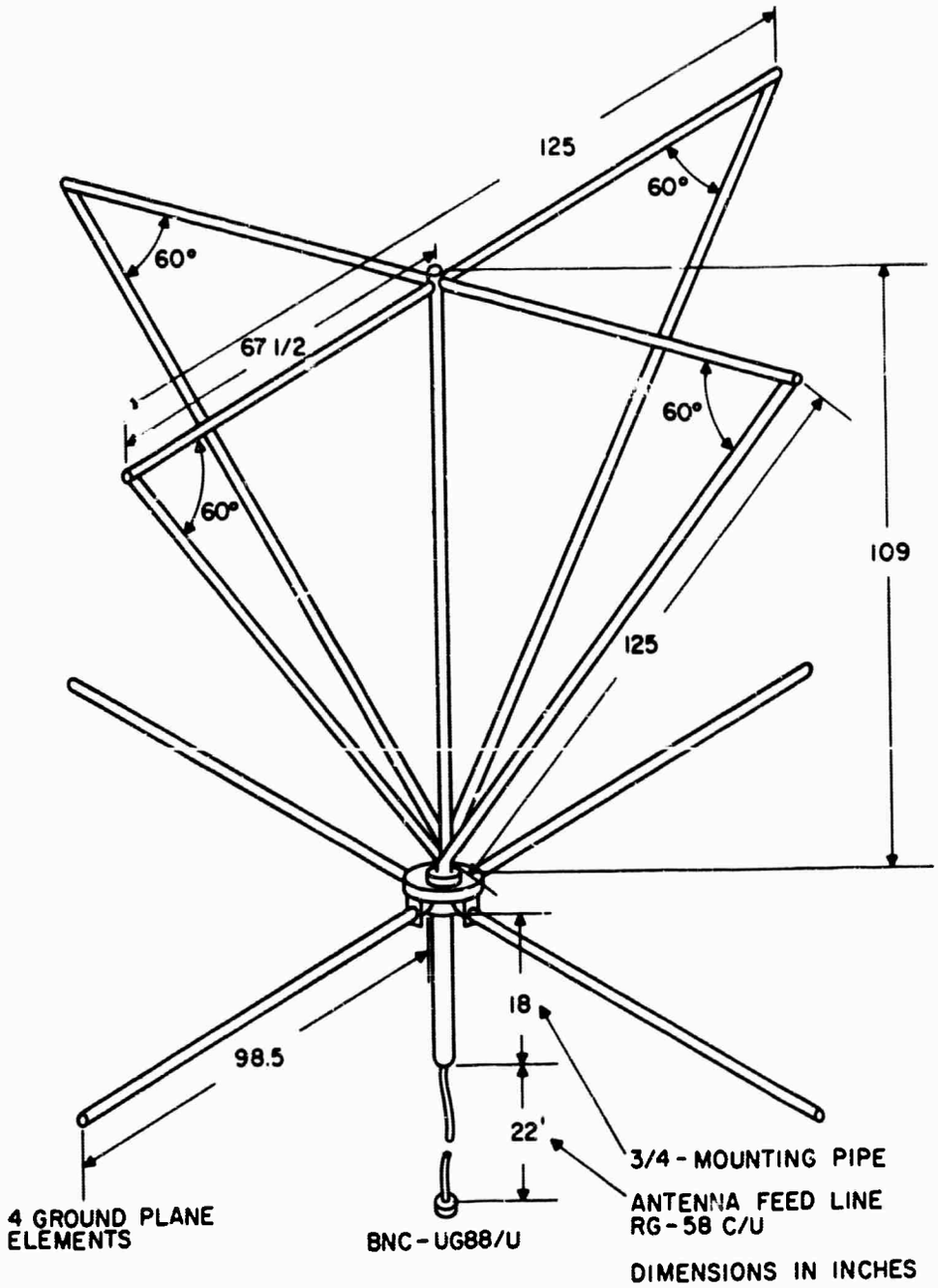

FIGURE 9. DISCONE ANTENNA OUTLINE

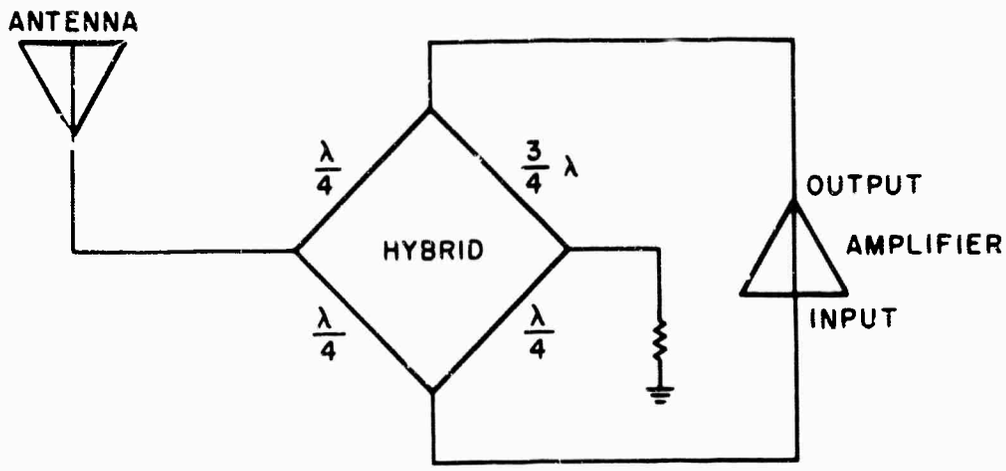

FIGURE 10. HYBRID CIRCUIT DIAGRAM

C. AMPLIFIER AND FILTER

The filter used in the high-gain repeater unit was a commercial, 50-kHz bandwidth, crystal filter with a center frequency of 30 MHz and an insertion loss of 5 db. The amplifier used in the high-gain repeater has a minimum bandwidth of 2 MHz centered at 30 MHz. The gain is adjustable from 30 to 70 db. The amplifier circuitry is similar to that used for the broadband unit described below.

The filter used in the broadband unit is a three-pole helical resonator type. A circuit diagram of this filter is shown in Figure 11. Design information for this type of filter is given in reference 2. The performance data taken on this filter is tabulated below.

f_o	30.1 MHz
BW_{3db}	0.5 MHz, nominal
BW_{30db}	2.5 MHz, nominal
Insertion loss	6.8 db
Input VSWR	1.5 at center frequency
Output VSWR	1.5 at center frequency

In this broad-bandwidth repeater, the filter was placed between the pre-amplifier and post-amplifier to provide the best compromise between noise figure, saturation from out of band signals, and output power. Insertion of the filter after the preamplifier provides the best noise figure. Placing the filter before the pre-amplifier would result in the insertion loss of the filter adding to the noise figure of the amplifier. Placing the filter before the post-amplifier prevents saturation of the

post-amplifier by out-of-band signals. Placing the filter after the post-amplifier would reduce the maximum available output power of the system by an amount equal to the insertion loss of the filter.

To facilitate any change in design required by system performance during development, discrete circuitry was used. However, miniature components were used to keep the amplifier volume as small as possible. The amplifier cross section is less than 0.5-inch square, excluding mount flanges. The volume of the post-amplifier is 1 cubic inch, and the preamplifier is 1.75 cubic inches. There are two stages of amplification in the preamplifier and one in the post-amplifier. All of the transistors are silicon devices, capable of providing 30 db of unneutralized gain at 30 MHz. The first stage of the preamplifier was designed for a low-noise figure and low VSWR. The noise figure of the first stage can be adjusted to be as low as 3 db. When the input matching is adjusted for minimum VSWR, the noise figure can reach a maximum of 5 db. The input VSWR does not exceed 1.1 at 30 MHz. The second stage was assigned the manual gain control (MGC) function to prevent the variation in transistor input impedance occurring with MGC from affecting the amplifier input VSWR. Forward MGC is used to aid in reducing distortion with high-signal levels. The MGC circuit is designed so that the gain can be controlled through a potentiometer connected to the amplifier supply voltage. The specifications for the preamplifier are as follows:

f_o	30 MHz
BW	3 MHz nominal
Gain	20 to 40 db nominal
Noise figure	5 db maximum
Input VSWR	1.1 maximum
Output VSWR	1.5 maximum
$Z_{in} = Z_{out}$	50 ohms nominal

The post-amplifier contains only one stage because its main functions are to provide a proper termination for the filter and the hybrid and to overcome the filter insertion loss. More than enough gain is supplied by this single stage for these functions. The specifications for this amplifier are as follows:

f_o	30 MHz
BW	2 MHz typical
Gain	17 db
P_o	+6 dbm (1-db compression)
Input VSWR	1.1 maximum
Output VSWR	1.3 maximum
$Z_{in} = Z_{out}$	50 ohms nominal

D. SYSTEM TESTS AND EVALUATION

1. HIGH-GAIN REPEATER BENCH TESTS

a. HYBRID ISOLATION

The circuit shown in Figure 12 was used in the laboratory to measure the hybrid isolation.

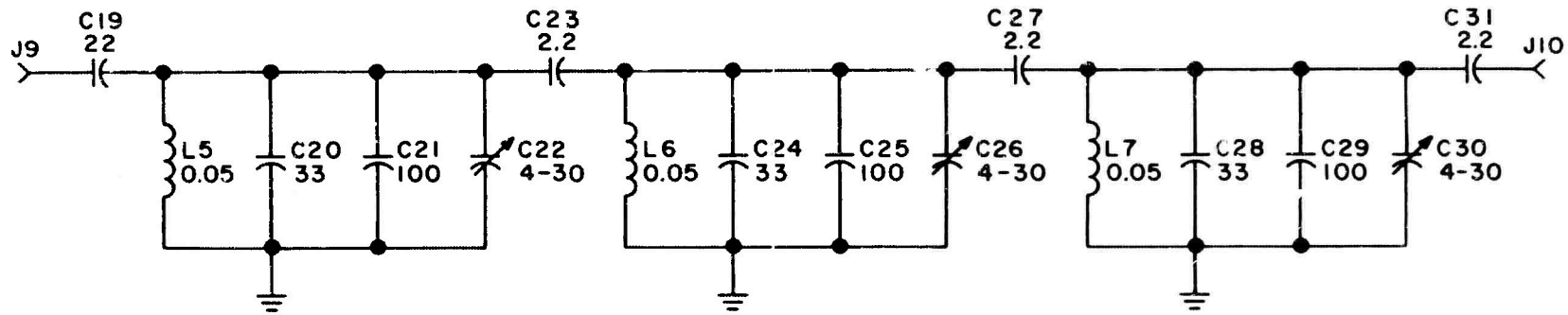

UNLESS OTHERWISE NOTED:
CAPACITANCE VALUES IN PF
INDUCTANCE VALUES IN μH

PERFORMANCE

INSERTION LOSS	6.8 db
PEAK FREQUENCY	30.100 MHz
-3db POINTS	30.356 AND 29.835 MHz
BAND PASS	550 kHz
-30db POINTS	31.324 AND 28.801 MHz

COIL DATA
5 1/2 TURNS, NO.12 BUS WIRE, 3/8 INCH I.D.

FIGURE 11. 30-MHz FILTER, SCHEMATIC

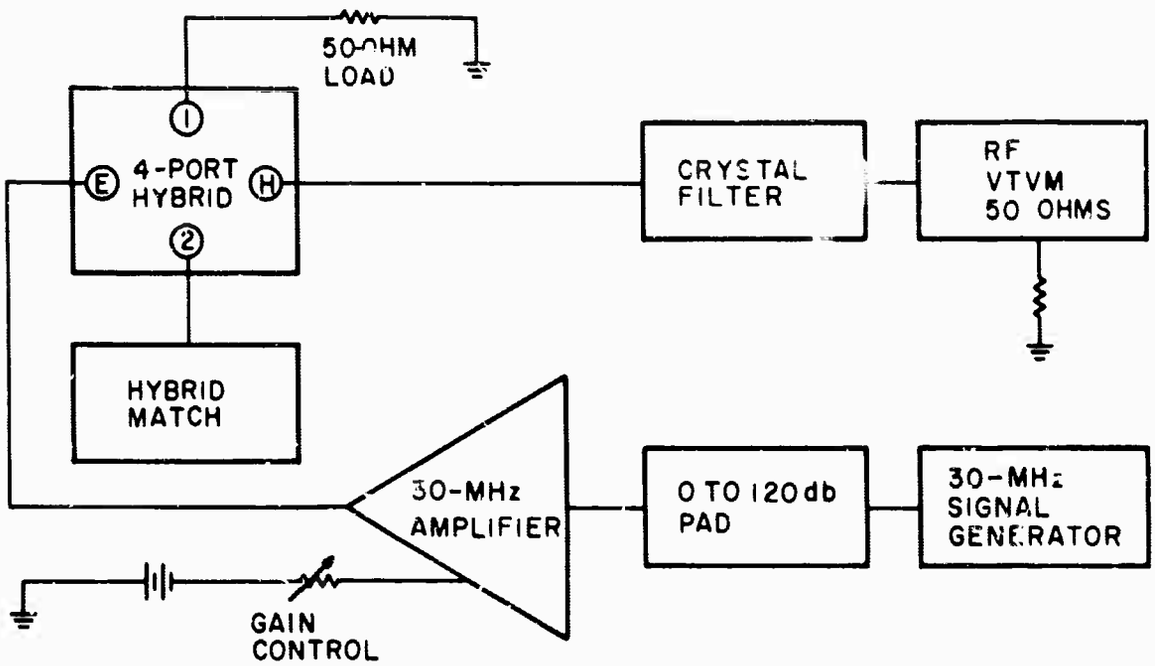

FIGURE 12. HYBRID ISOLATION TEST

The hybrid matching network was adjusted to give maximum isolation with a -40 dbm, 30-MHz input signal to the amplifier. The isolation recorded was > 60 db with the gain control set to 32 db, and 56 db with the gain control set to 47 db. The change in isolation with gain setting can be attributed to the amplifier input VSWR changing with MGC. In subsequent amplifier design, greater care was exercised to reduce this VSWR change with MGC.

b. SYSTEM TEST

The circuit shown in Figure 13 was used in the laboratory to measure maximum gain before oscillation occurred.

The antenna port was loaded with a low VSWR 50-ohm termination. Using a commercially available, 4-port hybrid, the available gain before oscillation was 47 db. It was of interest to determine whether other available hybrids were good enough to provide the required isolation. The following hybrids were inserted and the gain before oscillation was noted:

Test hybrid No. 2	Gain before oscillation 47 db
Test hybrid No. 3	Gain before oscillation 47 db

2. HIGH-GAIN REPEATER FIELD TESTS

a. SYSTEM PERFORMANCE

The circuit shown in Figure 14 was set up at the AIL Antenna Test Range to measure system performance.

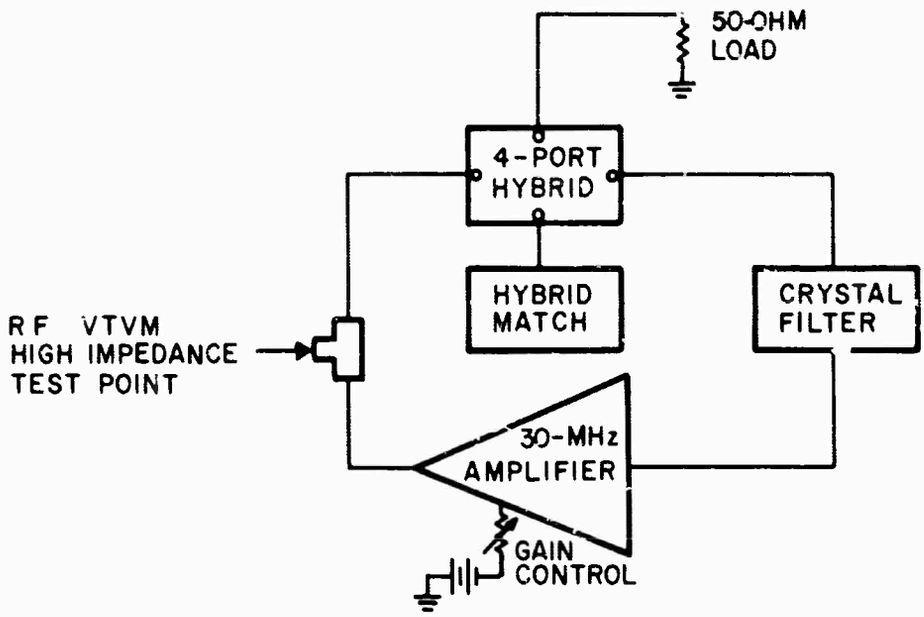

FIGURE 13. HIGH-GAIN REPEATER SYSTEM TEST (BENCH)

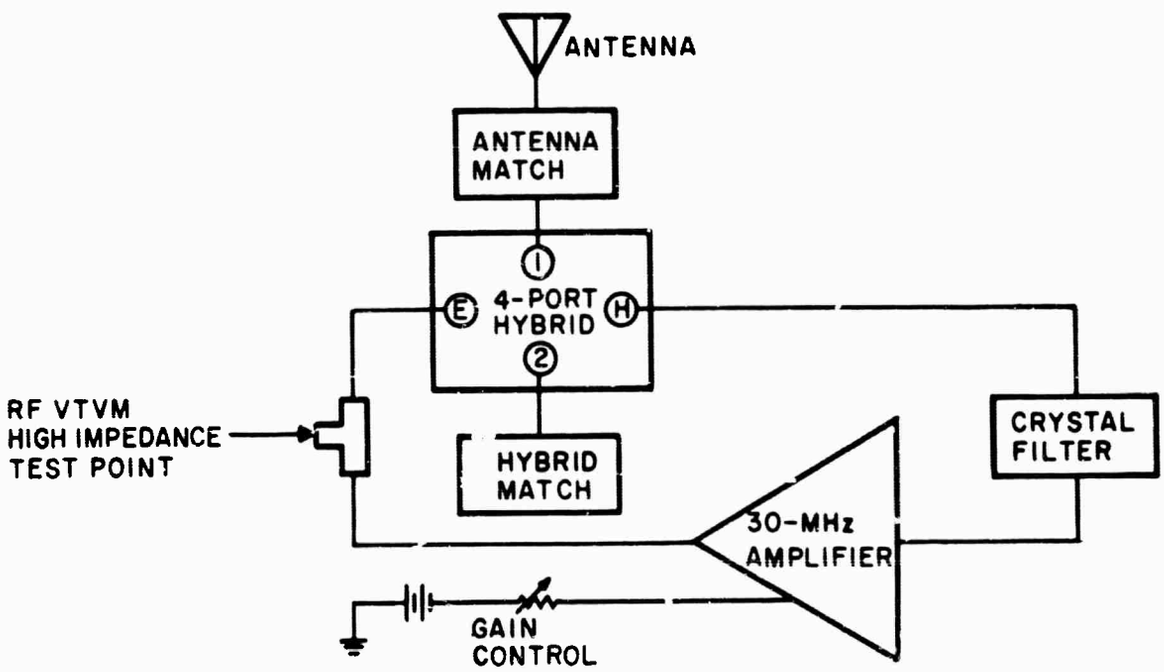

FIGURE 14. HIGH-GAIN REPEATER SYSTEM TEST (FIELD)

The antenna and its matching network were adjusted to 50 ohms and zero reactance using a Boonton (Model 250-A) RX Meter. The hybrid matching network was then adjusted for maximum isolation. With a 35-kHz crystal filter inserted in the amplifier loop, a maximum repeater gain of 51 db was noted. With an 80-kHz crystal filter inserted in the amplifier loop, a maximum repeater gain of 44 db was noted. It is apparent from this test that higher-stable gains can be achieved when the bandwidth is reduced.

b. REPEATER GO-NO-GO FIELD TEST

To perform a qualitative GO-NO-GO test, the circuit of Figure 14 was utilized and the following procedure followed.

1. One AN/PRC-25 was situated directly under the repeater antenna ground plane. A small wire antenna was used to reduce its power output and sensitivity.
2. The repeater gain was set to 41 db and an amplifier output of -16 dbm (measured at RF VTVM Bridging Point) was noted when the AN/PRC-25 was keyed on. This amounted to a receive signal at the repeater of -55 dbm.
3. The other AN/PRC-25 was moved some distance from the repeater and down a loading ramp (below ground level) so line-of-sight conditions did not exist between the two radio sets. At this point, the repeater was turned on and communications between the sets were normal. When the repeater was turned off, there were no communications.

These procedures were followed on several occasions and in each case communications were established only when the repeater was on.

3. WIDE-BAND REPEATER

A complete exploratory development model repeater has been assembled and tested. The circuit configuration is shown in Figure 15 and the electronic package, less the antenna, is shown in Figures 6 and 7. The unit measures 4 inches wide by 6 inches long by 2 inches deep, exclusive of the mounting plate.

The amplifier gain is controlled by means of a front panel adjustment which supplies a DC bias to the AGC bus. The output level of the amplifier was monitored with a VTVM at the amplifier output bridging point. With a system bandwidth of 500 kHz, stable repeater gains of 37 db have been recorded. The specifications of the repeater are:

Carrier frequency	30.15 MHz
BW_{3db}	500 kHz
Linear output power	+3 dbm
Effective noise figure	8.5 db
Unsaturated repeater gain	37 db

To further test stability, an aluminum plate 1 foot by 2 feet was held at various distances from the broadband monopole 1 foot above the ground plane. No oscillation was observed until the aluminum plate physically touched the monopole.

Qualitative GO-NO-GO field tests, similar to those discussed previously were performed, and in all instances communication was established when the repeater was inserted.

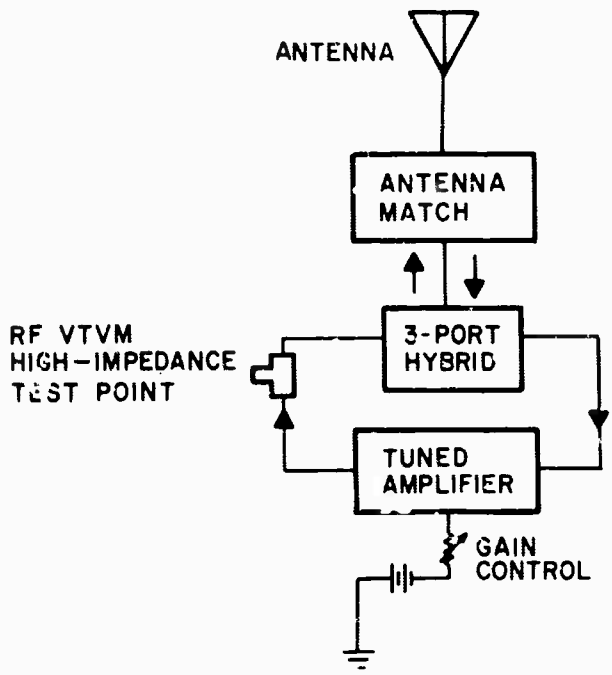

FIGURE 15. WIDE-BAND REPEATER SYSTEM TEST (FIELD)

SECTION IV
CONCLUSIONS AND RECOMMENDATIONS

The results of this theoretical and experimental investigation indicate that the hybrid-amplifier F_1, F_1 single-frequency repeater concept is indeed feasible.

A. NARROW-BAND OPERATION

Narrow-band (50 kHz) F_1, F_1 repeaters have been constructed with gains approaching the theoretical limit. Operation over such narrow bandwidths, to increase stable operational gain, necessitates the use of crystal filters. The use of individual-channel crystal filters in a system of several hundred channels is the limitation on narrow-band operation in view of the logistics problem involved. In order to achieve this high-gain performance over the entire 30 to 76 MHz band without the use of 920 separate individual channel filters, a down conversion scheme could be employed. For example, at 10.7 MHz, narrow-band and miniature IF components are readily available. This approach would require a frequency synthesizer as a local oscillator to the down-converter. The same synthesizer would feed an up-converter which would return the signal to its original frequency after IF amplification and filtering.

This approach would combine high-gain operation with high selectivity, without the use of individual channel filters. An automatic gain control circuit could also be added which, when implemented with a sensing circuit in the hybrid to detect hybrid unbalance, would automatically adjust the repeater gain to achieve maximum gain under varying conditions of antenna environment.

B. WIDE-BAND OPERATION

As discussed in Section II, and shown in Section III D, wide-band operation implies lower repeater gain. The extent of gain reduction depends on how broadbanded the antenna can be made, and how well the hybrid termination can track the antenna characteristics over the frequency range in question.

Operation of F_1, F_1 repeaters over the frequency range of the AN/PRC-25 transceiver (30 to 76 MHz) requires satisfying the above conditions. At present, there are two ideas on methods to accomplish this broadband operation. The first approach would entail extensive research and fabrication of an antenna that is broadbanded, and meets the requirements of having a VSWR of less than 1.05 over the band. With this accomplished, a simple 50-ohm low-VSWR hybrid termination could be used. The amplifier loop would consist of a tunable amplifier-filter combination. This method is technically difficult, perhaps requiring new techniques in antenna structures to be implemented in place of the conventional monopole or dipole structure.

The second approach could utilize an adjustable monopole (or dipole) and a ganged range switch to tune the antenna-hybrid system over the frequency band. The amplifier loop would again be either a wide-band amplifier or a tunable amplifier-filter combination. This is the more conventional method of attacking the broadbanding problem and one whose performance results can be reliably predicted. The fact that a range switch and more tuning elements are involved requires the physical size of the repeater to be increased slightly. If varactor tuning is used, miniaturization will not present a problem.

Wide-band repeater operation has other side effects which may or may not be detrimental, depending upon environment and frequency density. With a wide-open front end, the amplifier is subject to jamming from any frequency in the operating range, and multiple access may be a problem (high level signal will dominate the repeater).

In order to extend this feasibility concept to include a wide bandwidth, or widely tunable model, suitable for field deployment, it is recommended that additional effort be expended in the development of:

1. Wide bandwidth and widely tunable, low VSWR antennas suitable for field deployment by relatively unskilled personnel.

2. Wide bandwidth and widely tunable hybrid terminations which reproduce the desired antenna characteristics and thus enhance stability of the repeater for high-gain operation.

3. Necessary circuit techniques to provide automatic gain control of the repeater as a function of hybrid unbalance caused by changes in the antenna environment.

C. MINIATURIZATION

The extent to which miniaturization is possible is only limited by present-day microminiature components. As the state of the art advances in this area, size becomes less and less a problem. The F_1, F_1 repeater circuitry can be completely contained in a volume of 2.5 cubic inches. Figure 16 shows an AIL microminiature amplifier and filter. Within this case, there is sufficient room to house all of the remaining components to complete the F_1, F_1 repeater, including the special hybrid and the antenna broadbanding network.

The schematic of this amplifier is shown in Figure 17. The amplifier consists of four modular stages preceding the filter and one following the filter. This amplifier-filter combination has several advantages. When compared to the wide-band repeater amplifier-filter combination, it can be seen that there is a reduction in size from 11 to 2.5 cubic inches there is sufficient room remaining in the 2.5-cubic inch case to construct the hybrid and antenna matching network. Therefore, the complete F_1, F_1 repeater circuitry can be contained in this 2.5-cubic inch volume. The noise figure of this microminiature amplifier is only 2.1 db. In addition to this low-noise figure, the input stages can accept -20 dbm before a 1-db gain compression occurs. The small filter used with the microminiature amplifier has a loss of 30 db because the unloaded Q in a volume of 0.25-cubic inches is low, being typically less than 100. However, the 18-db per stage gain of the five microminiature modules can more than compensate for this high filter insertion loss, and because of their small size, the overall volume of the amplifier-filter combination is drastically reduced. The specifications for the microminiature amplifier -filter combination are tabulated below:

f_o	30 MHz
BW_{3db}	0.7 MHz
Gain	40 to 60 db nominal
Noise figure	2.1 db

A further reduction in size of the amplifier and filter is possible. Figure 18 shows a photograph of an AIL microminiature module which has 30-db gain at 30 MHz. Three of these modules will provide sufficient gain for the F_1, F_1 repeater. By using miniature inductors and capacitors, a smaller filter than was used in the microminiature amplifier-filter unit described previously can be constructed. The higher loss of the small filter can be accepted because of the high gain of these modules. It is expected that by this method, the overall volume of the F_1, F_1 repeater can be made to approach 1 cubic inch.

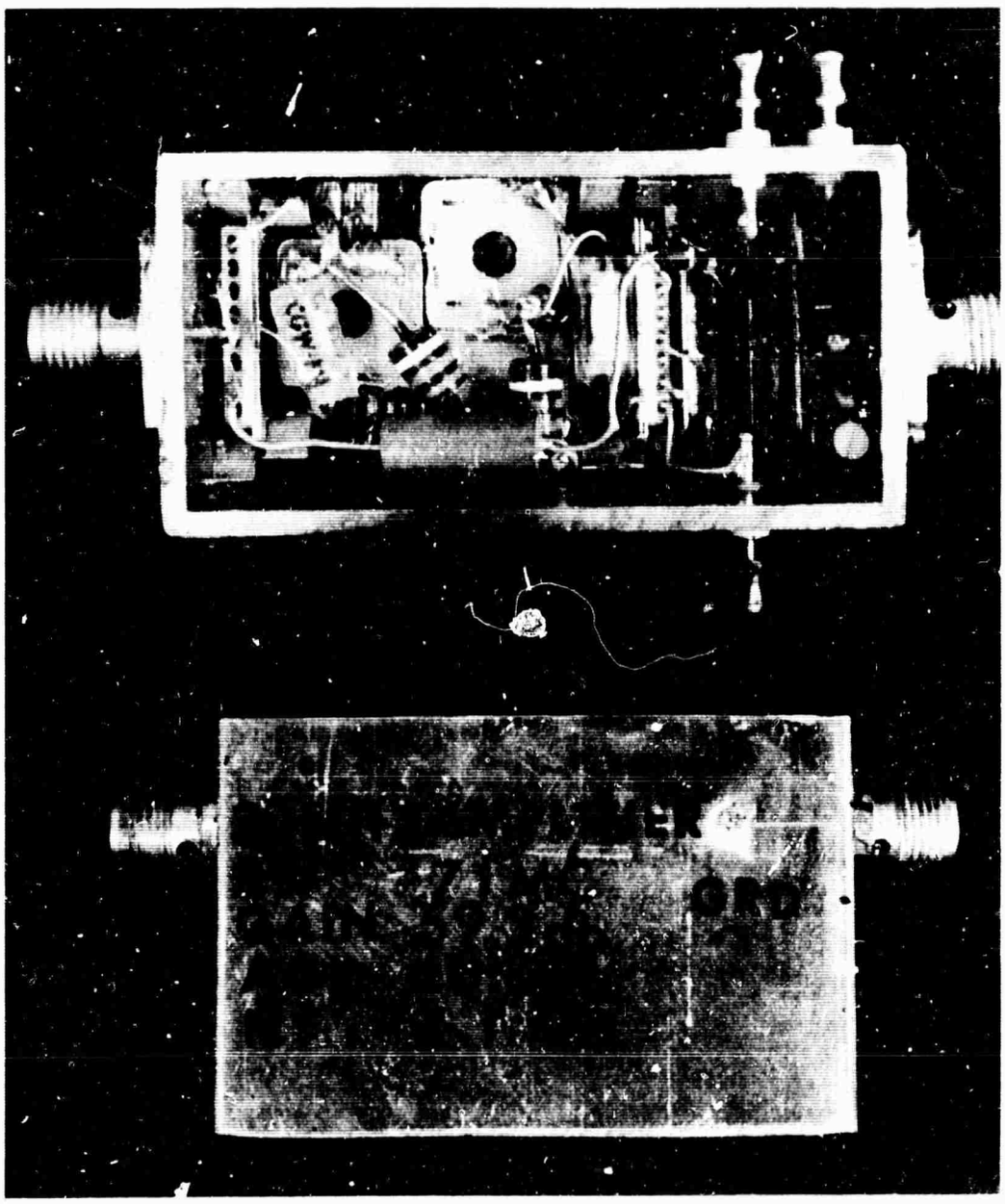

FIGURE 16. MICROMINATURE TUNED AMPLIFIER

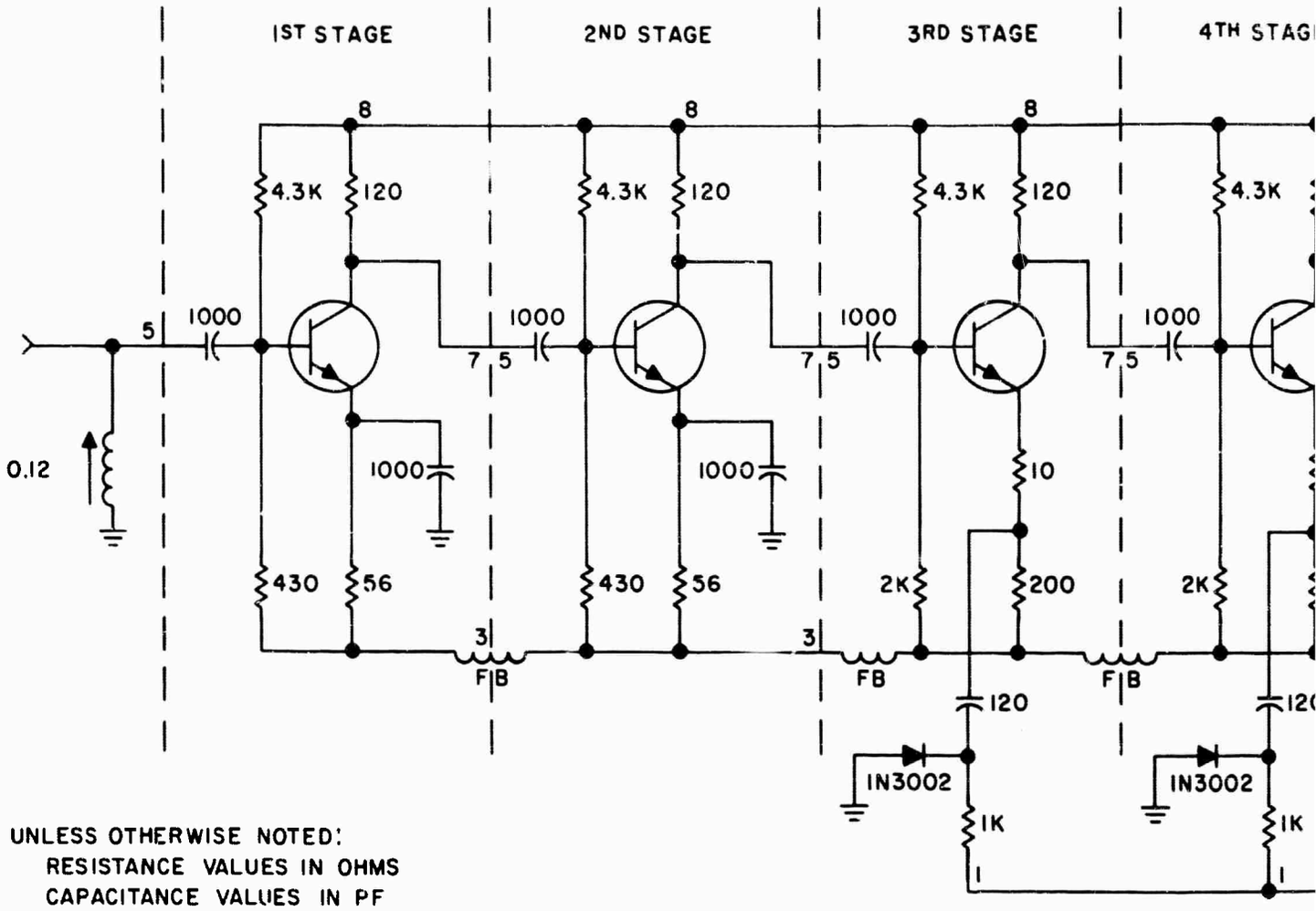

UNLESS OTHERWISE NOTED:
RESISTANCE VALUES IN OHMS
CAPACITANCE VALUES IN PF
INDUCTANCE VALUES IN μH
1 st AND 2nd STAGE PART NO. AIL 360085-1
3rd AND 4th STAGE PART NO. AIL 360086-1
5th STAGE PART NO. AIL 360087-1
FILTER COIL PART NO. AIL 118244-11
BW 0.71 MHz
GAIN 59.3 db
AGC 40.0 db
NF 2.1 db
FB FERRITE BEAD CHOKE

A

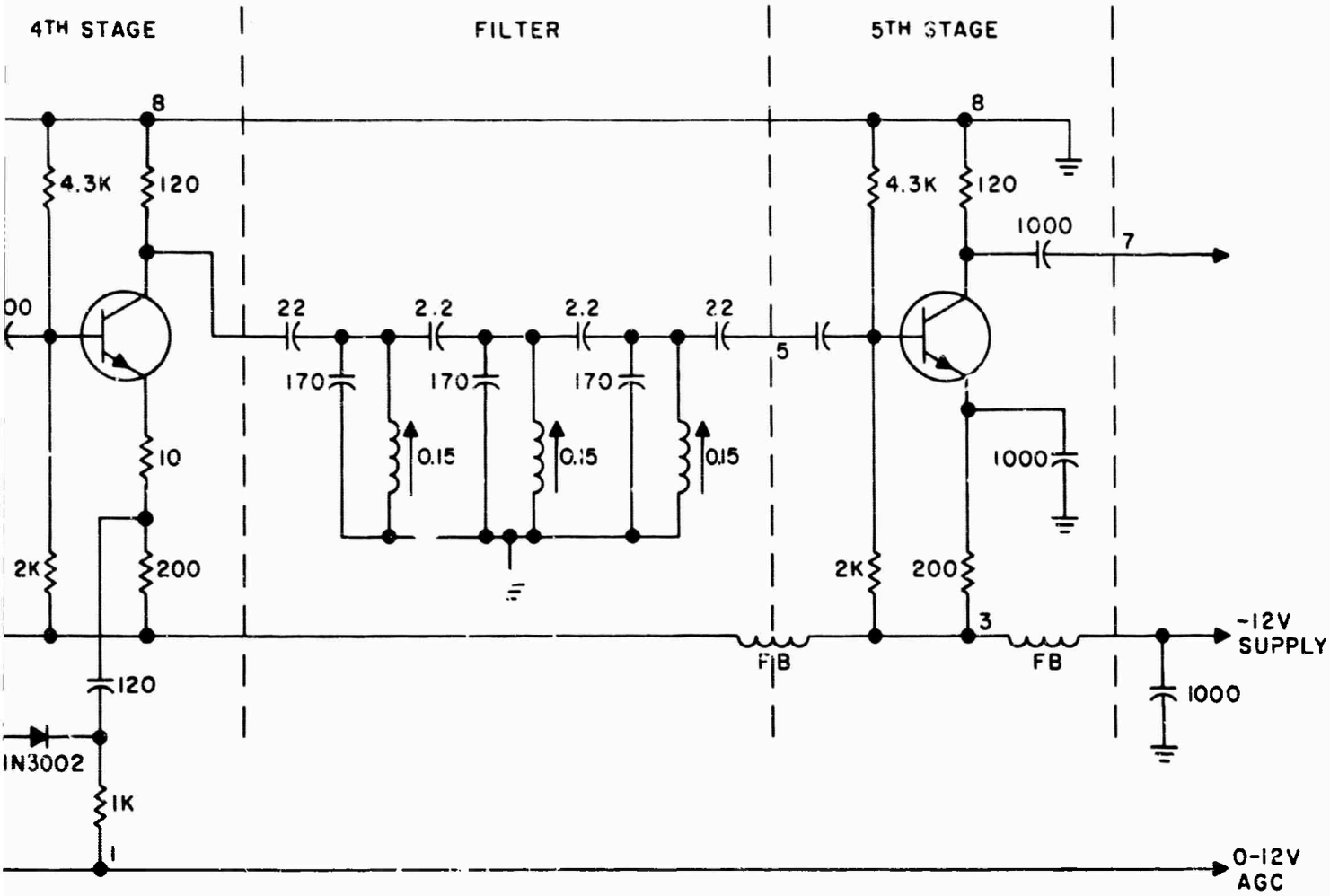

FIGURE 17. MICROMINIATURE 30-MHz TUNED AMPLIFIER

FIGURE 17

13

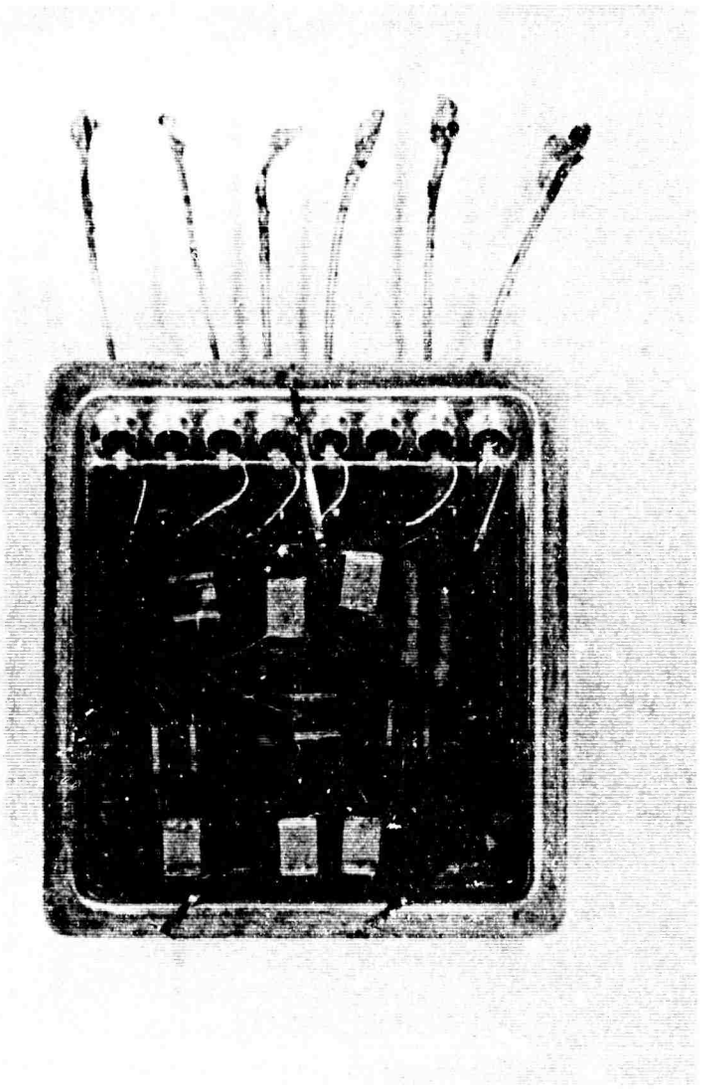

FIGURE 18. HIGH-GAIN MICROMINIATURE AMPLIFIER

BLANK PAGE

APPENDIX I
ANTENNA MATCHING ANALYSIS

This appendix presents a detailed analysis of the low-frequency dipole antenna driving point impedance. Two types of tuning are considered: a single-tuned circuit and a double-tuned circuit. It is shown that the double-tuned circuit and dipole antenna have a voltage reflection coefficient equal to the normalized deviation of the signal being passed. Typically, the resultant AM sidebands caused by this frequency dependent reflection coefficient will each be more than 42 db down from the leakage FM carrier power appearing at the receiver input.

For the electrically short dipole antenna, Jordan (reference 3) gives the effective radiation resistance, referred to the antenna input terminals as

$$R_{11} = 800 \left(\frac{H}{\lambda}\right)^2 \tag{3}$$

where

H = the half-length of the dipole (Figure 19).

λ = the free space wavelength of the excitation.

The approximate reactance of the antenna is given by

$$X_{11} = -Z_o' \ \text{ctn}\, \beta H \tag{4}$$

since

$$Z_o' = 120 \left(\ln \frac{H}{a} - 1\right) \tag{5}$$

where

β = wave number $= 2\pi/\lambda$

$a = 2r_o/\sqrt{2}$ (Figure 19)

$2r_o$ = diameter of the dipole antenna element

Thus, the antenna input impedance is

$$Z_{11}(\omega) = 800 \left(\frac{H}{\lambda}\right)^2 - j\, Z_o' \ \text{Ctn}\, \beta H \tag{6}$$

for $H < 0.2$.

To a first approximation the radiation resistance dependence on frequency can be written as

$$R_{11}(y) = R_{11}(o)\ (1 + 2y) \tag{7}$$

where

y = the normalized deviation, $\Delta f/f_o$

Δf = the deviation from center frequency

f_o = the center frequency

λ_o = the wavelength at center frequency

$R_{11}(o) = 800\ (\lambda/\lambda_o)^2$

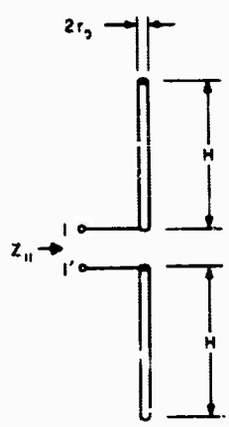

FIGURE 19. CYLINDRICAL ANTENNA

When second order frequency effects (y^2) have been neglected, and using trigonometric identities,

$$X_{11}(y) \cong -Z_o'\ \text{ctn}\ \beta_o H\ (1 - \alpha_o y) \cong -X_{11}(o)\ (1 - \alpha_o y) \tag{8}$$

where

$$\beta_o = 2\pi/\lambda_o$$
$$\alpha = 2\ \beta_o H/\sin 2\ \beta_o H$$
$$y = \Delta f/f_o$$
$$X_{11}\ (o) = Z_o'\ \text{ctn}\ \beta_o H$$

Thus, the input impedance for the antenna is

$$Z_a = R_{11}(o)\ (1 + 2y) - j\ X_{11}(o)\ (1 - \alpha_o y) \tag{9}$$

This is shown in Figure 20.

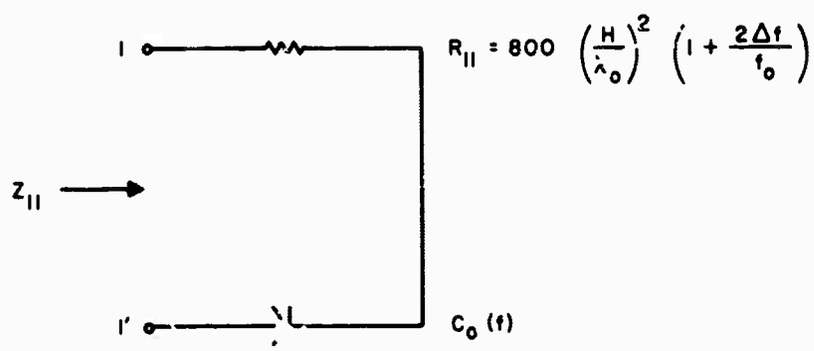

FIGURE 20. EQUIVALENT CIRCUIT FOR SHORT ANTENNA

To utilize this antenna in a circuit, its reactance will have to be tuned out; the most straightforward manner of accomplishing this is with an inductor either in series with the antenna (low-impedance mode) or in shunt with the antenna (high-impedance mode). Both cases yield the same result for VSWR and reflection coefficient.

When an inductor in series with the antenna is used to tune the antenna, and the resistance is transformed to the characteristic impedance of the line, the reflection coefficient (for the range of interest) is given approximately by

$$\Gamma \cong j\ \frac{X_{11}\ (o)}{2R_{11}\ (o)}\ (1 + \alpha_o)\ y$$

Thus,

$$\frac{\Gamma}{j} = \frac{j\ 120 \left(\ln \frac{H\sqrt{2}}{2r_o} - 1\right) \cot \beta_o H \left(1 + \frac{2\ \beta_o H}{\sin 2\ \beta_o H}\right)}{2(800)\left(\frac{\beta_o H}{2\pi}\right)^2}$$

This is plotted in Figure 21. For small values of Γ, the VSWR is given by

$$VSWR \approx 1 + 2\Gamma$$

Figure 22 shows the schematic diagram of the antenna with a double-tuned matching section. Analysis shows that the voltage reflection coefficient of the composite tuned network (with antenna) is approximately given by

$$\Gamma = y$$

Thus, we see that the voltage reflection has been reduced by a factor of $(1 + \alpha_0)\,[X_{11}(o)]/2R_{11}(o)$ over that of the single-tuned case. This typically represents a reduction of about 20 (26 db in reflected power).

The effective coupling between the repeater output and receiver input can be calculated from Figure 23. If the power output of the repeater transmitter is P, then 1/2 P is delivered to the antenna by virtue of the hybrid action. The antenna, having voltage reflection coefficient Γ, reflects back to the hybrid power $(1/2\ P)\ |\Gamma|^2$, and half of this is delivered to the receiver input (that is, $1/4\ P\ |\Gamma|^2$). The hybrid isolation, I, is expected to be greater than 30 db; that is, any feed through component will be more than 30 db down. Thus, the voltage appearing at the receiver input due to the transmitter is

$$e_{12} = I\left(1 + \frac{1}{2}\frac{\Gamma}{I}\right) e_o \qquad (10)$$

The isolation, I, is nominally independent of frequency; however, to a first approximation, Γ is given directly by the normalized frequency deviation (double-tuned circuit).

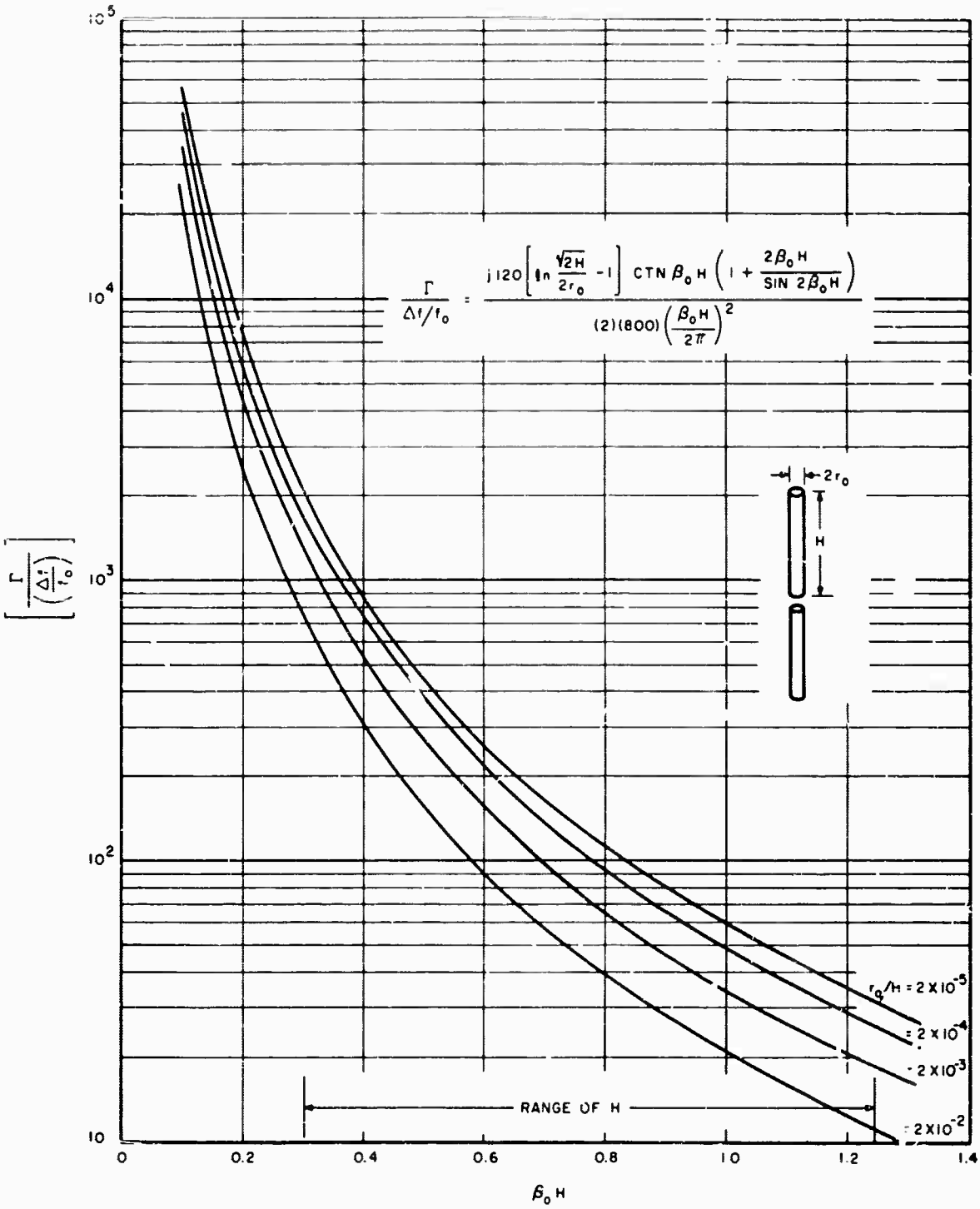

FIGURE 21. NORMALIZED REFLECTION COEFFICIENT VS ANTENNA LENGTH

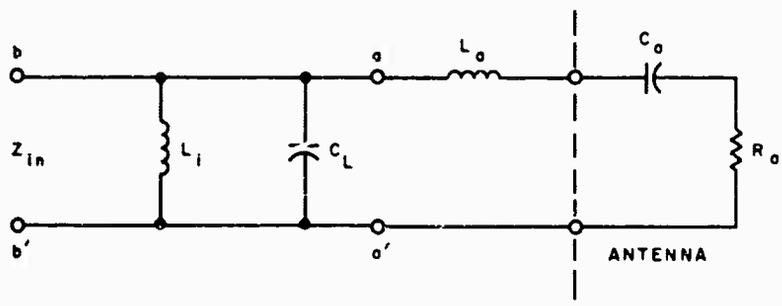

FIGURE 22. ANTENNA WITH DOUBLE-TUNED MATCHING SECTION

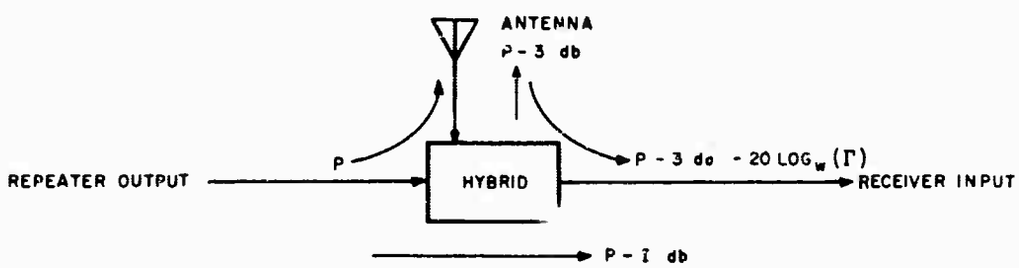

FIGURE 23. HYBRID FOR COUPLING REPEATER OUTPUT TO RECEIVER INPUT

APPENDIX II
ANTENNA IMPEDANCE DATA

A. MONOPOLE ANTENNA-NO MATCHING NETWORK

The data in the appendix is that of the monopole antenna of Figure 8. The test was performed in the following manner. The antenna was mounted at the top of a 20-foot support, and the BNC connector end of the 22-foot antenna feed cable was attached to a Boonton RX Meter (Model 250-A) at ground level. The antenna impedance was then measured at each of the designated frequencies. Exact frequencies were set on the RX Meter using a frequency counter (Hewlett-Packard Model 5244L). The data (Table I) has been plotted to present it in a more useful form (Figures 24 and 25.

B. DERIVATION OF MONOPOLE ANTENNA EQUIVALENT CIRCUIT

From the previous data, it can be seen that, to a first approximation, the antenna represents a series RLC circuit.

For the narrow-band case the reactance variation can be derived

$$X(\omega) = \omega L \left[1 - \frac{\omega_c^2}{\omega^2} \right], \tag{13}$$

where ω_o^2 equals L/C.

Let,

$$\omega = \omega_o + \delta$$

Then

$$X(\delta) = (\omega_o + \delta)\, L \left[1 - \frac{1}{\left(1 + \frac{\delta}{\omega_o}\right)^2} \right] \tag{14}$$

$$X(\delta) \cong (\omega_o + \delta)\, L \left[1 - \left(1 - \frac{2\delta}{\omega_o}\right) \right] \tag{15}$$

$$X(\delta) \cong (\omega_o + \delta)\, L \frac{2\delta}{\omega_o} \tag{16}$$

Thus

$$X(\delta) \approx 2\,\delta L \tag{17}$$

TABLE I

MONOPOLE ANTENNA IMPEDANCE-NO MATCHING

Frequency (MHz)	Shunt Z (measured) (R ± pf)	Shunt Z R ± jΩ	Series Z R ± jΩ	R/Z_0	X/Z_0
28.900	20.4 + 4	20.4 - j 1400	20.4 + j 0	0.41	
29.000	21.0 - 25	21.0 + j 220	21.0 + j 2.0	0.42	+ 0.04
29.100	22.0 - 50	22.0 + j 110	22.0 + j 5.0	0.44	+ 0.10
29.200	23.7 - 71	23.7 + j 73	23.0 + j 8.0	0.46	+ 0.16
29.300	26.0 - 86	26.0 + j 63	22.0 + j 9.0	0.44	+ 0.18
29.400	28.5 - 94.5	28.5 + j 57	23.0 + j 12.0	0.46	+ 0.24
29.500	31.1 - 100	31.1 + j 55	23.0 + j 14.0	0.46	+ 0.28
29.600	35.0 - 101.4	35.0 + j 52.0	24.0 + j 16.5	0.48	+ 0.33
29.700	38.9 - 100	38.9 + j 52.0	25.0 + j 18.0	0.50	+ 0.36
29.750	40.8 - 99.0	40.8 + j 53.0	26.0 + j 20.0	0.52	+ 0.40
29.800	42.7 - 97.8	42.7 + j 53.5	26.5 + j 21.0	0.53	+ 0.42
29.850	45.1 - 96.0	45.0 + j 54	27.0 + j 22.5	0.54	+ 0.45
29.900	47.2 - 93.9	47.2 + j 56	27.5 + j 23.0	0.55	+ 0.46
29.925	48.4 - 93.0	48.4 + j 56	27.5 + j 23.0	0.55	+ 0.46
29.950	49.5 - 92.1	49.5 + j 58	28.0 + j 24.5	0.56	+ 0.49
29.975	51.0 - 90.7	51.0 + j 53.5	28.5 + j 25.5	0.57	+ 0.51
30.000	52.0 - 89.4	52.0 + j 60	30.0 + j 26.0	0.60	+ 0.52
30.025	53.0 - 88.4	53.0 + j 60	30.0 + j 26.5	0.60	+ 0.53
30.050	54.2 - 87.2	54.2 + j 60.5	30.5 + j 27.5	0.61	+ 0.55
30.075	55.2 - 86.3	55.2 + j 61.0	30.5 + j 27.5	0.61	+ 0.55
30.100	56.4 - 85.0	56.4 + j 62.0	31.0 + j 28.0	0.62	+ 0.56
30.150	59.0 - 82.6	59.0 + j 63.0	31.5 + j 29.0	0.63	+ 0.58
30.200	61.9 - 80.0	61.9 + j 65.5	32.5 + j 31.0	0.65	+ 0.62
30.250	64.0 - 77.8	64.0 + j 66.0	32.5 + j 32.0	0.65	+ 0.64
30.300	66.5 - 75.0	66.5 + j 70.0	35.0 + j 33.0	0.70	+ 0.66
30.400	71.0 - 70.0	71.0 + j 75.0	37.5 + j 36.0	0.75	+ 0.72
30.500	76.0 - 65.2	76.0 + j 80.0	40.0 + j 37.5	0.80	+ 0.75
30.600	80.3 - 61	80.3 + j 85.0	42.0 + j 40	0.84	+ 0.82
30.700	86.0 - 56.3	86.0 + j 93.0	47.0 + j 44	0.94	+ 0.88
30.800	90.3 - 52	90.3 + j 100.0	50.0 + j 45	1.00	+ 0.90

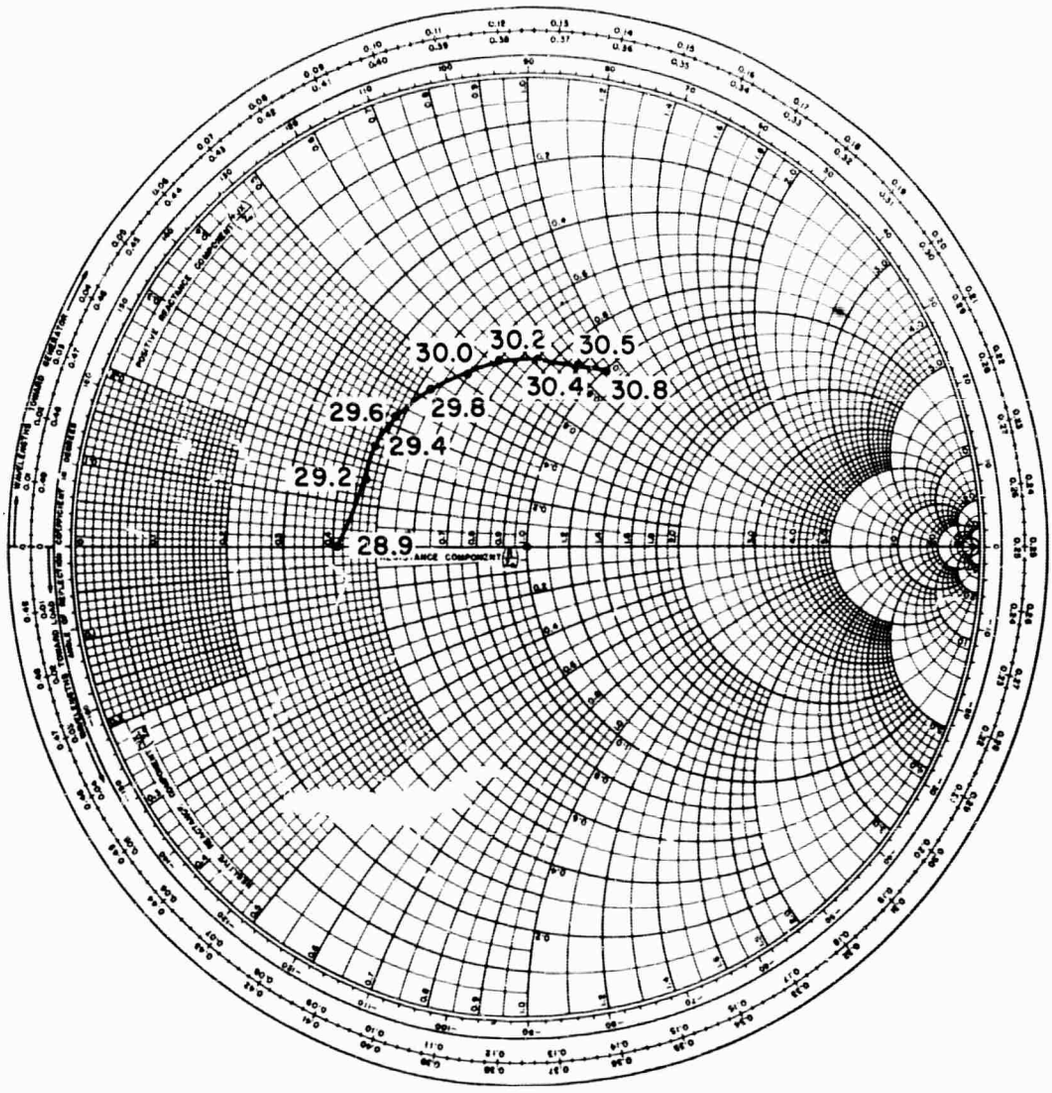

FIGURE 24. SMITH-CHART PLOT OF MONOPOLE ANTENNA IMPEDANCE VS FREQUENCY

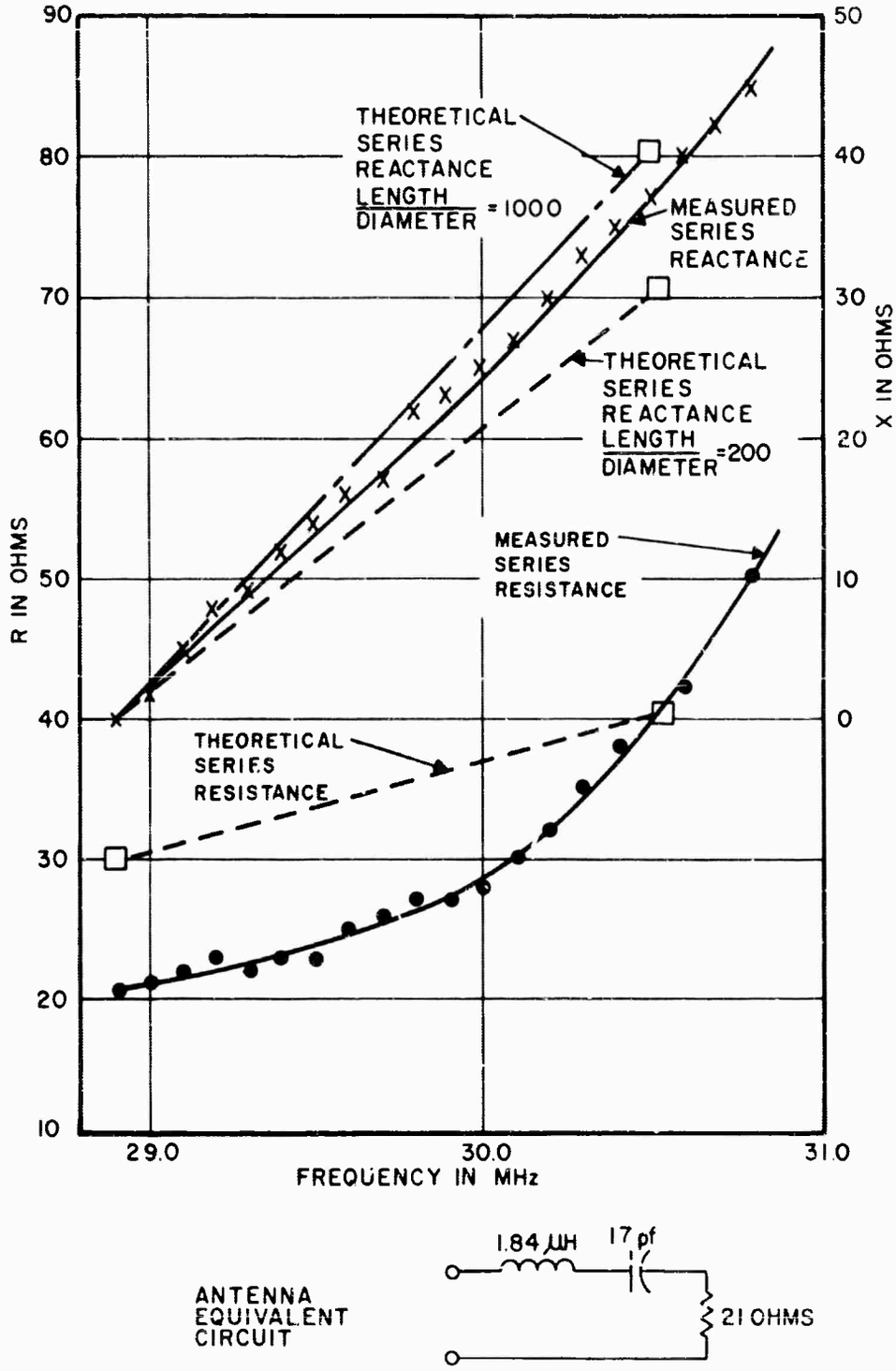

FIGURE 25. RESISTANCE AND REACTANCE VS FREQUENCY FOR MONO-POLE ANTENNA

This relation allows us to calculate L (μh) the equivalent inductance of the antenna. Inserting values from the data,

$$\delta = 2\pi\ (30200 - 28900) \times 10^3$$

For

$$X = 30$$

$$L = \frac{30}{(2)\ (2\pi)\ (1.3)} = 1.84\ \mu h$$

Knowing L and the resonant frequency (28.9 MHz), C is found to be 16.5 pf.

The equivalent circuit of the monopole antenna is shown in Figure 26.

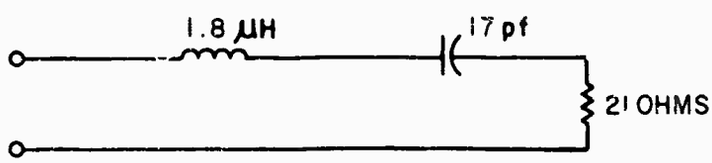

FIGURE 26. MONOPOLE ANTENNA EQUIVALENT CIRCUIT

This information allows us to design the required matching networks.

C. MONPOLE ANTENNA WITH BASIC MATCHING NETWORK FOR HIGH-GAIN REPEATER

The basic matching network for the high-gain repeater was selected to reduce the antenna reactance to zero, and its resistance to 50 ohms at 30 MHz. This network effectively reduced the complex impedance variations so that a VSWR of 1.02 was obtained over 50 kHz centered at 30 MHz. With this network, repeater gains of 50 db have been observed. The antenna basic matching network have the equivalent circuit shown in Figure 27.

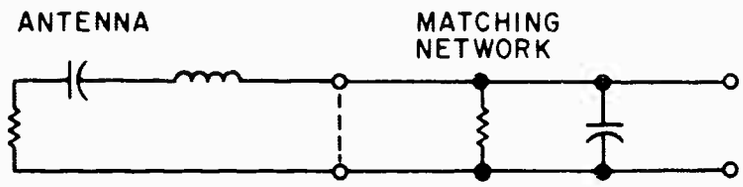

FIGURE 27. MONOPOLE ANTENNA AND BASIC MATCHING NETWORK EQUIVALENT CIRCUIT

The antenna and this matching network were tested in a similar manner as the monopole antenna.

The data shown in Table 11 and graphs are presented in Figures 28 and 29.

TABLE II

MONOPOLE ANTENNA AND BASIC MATCHING NETWORK IMPEDANCE

Frequency (MHz)	Shunt Z R ± pf	Shunt Z R ± j X(Ω)	Series Z R ± j X(Ω)	R/Z_o	X/Z_o
28.900	29.5 - 100.0				
29.000	32.0 - 90				
29.100	34.8 - 79				
29.200	36.9 - 69				
29.300	39.2 - 59				
29.400	41.3 - 49.3				
29.500	43.2 - 40.5	43.2 + j 135	39 + j 13.0	0.78	+0.26
29.600	45.0 - 31.5	45.0 + j 175	42.5 + j 11.0	0.85	+0.22
29.700	46.3 - 23.4	46.3 + j 230	46.0 + j 9.0	0.92	+0.18
29.750	47.0 - 19.6	47.0 + j 270	45.7 + j 8.0	0.915	+0.16
29.800	47.7 - 15.7	47.7 + j 335	47.0 + j 6.7	0.94	+0.134
29.850	48.2 - 11.6	48.2 + j 465	47.7 + j 4.95	0.954	+0.099
29.900	49.0 - 8.3	49.0 + j 670	48.9 + j 3.55	0.978	+0.071
29.925	49.3 - 6.4	49.3 + j 850	49.3 + j 2.84	0.986	+0.057
29.950	49.5 - 4.5	49.5 + j 1090	49.5 + j 2.25	0.99	+0.045
29.975	49.8 - 2.8	49.2 + j 1900	49.2 + j 1.27	0.99	+0.045
30.000	50.0 + 0	50 + j ∞	50 + j 0	1.00	0
30.025	50.2 + 0.7	50.2 - j 5000	50.2 - j 0.5	1.004	-0.01
30.050	50.3 + 2.5	50.3 - j 2200	50.3 - j 1.1	1.005	-0.022
30.075	50.6 + 3.9	50.6 - j 1350	50.6 - j 1.9	1.012	-0.038
30.100	50.7 + 5.7	50.7 - j 900	50.7 - j 2.8	1.013	-0.056
30.150	51.0 + 9.0	51.0 - j 600	50.7 - j 4.28	1.013	-0.086
30.200	51.2 + 12.1	51.2 - j 440	50.7 - j 5.8	1.013	-0.116
30.250	51.4 + 15.3	51.4 - j 360	50.3 - j 7.2	1.005	-0.144
30.300	51.5 + 18.3	51.5 - j 300	50 - j 8.6	1.00	-0.172

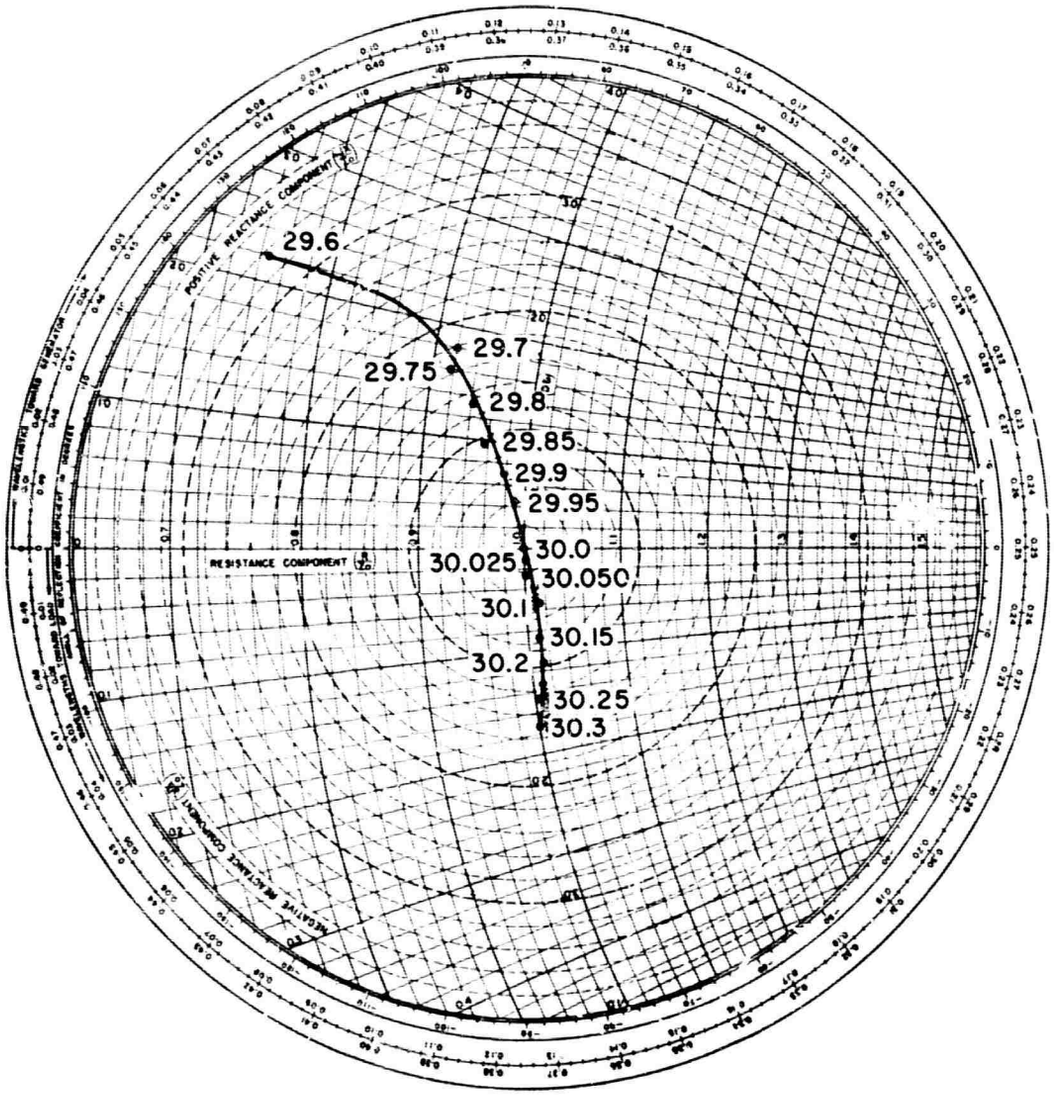

FIGURE 28. SMITH-CHART PLOT OF MONOPOLE ANTENNA AND BASIC MATCHING NETWORK VS FREQUENCY

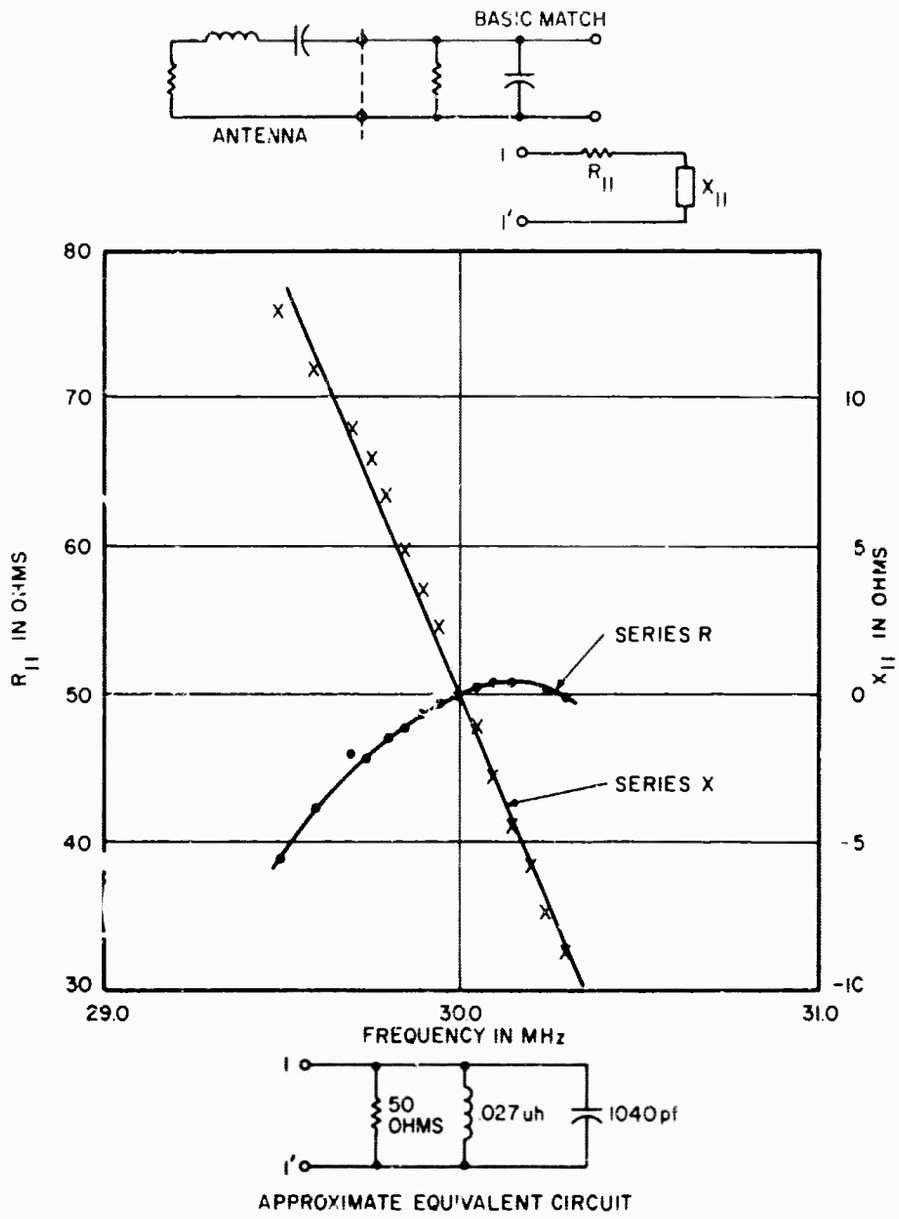

FIGURE 29. RESISTANCE AND REACTANCE VS FREQUENCY FOR MONOPOLE ANTENNA AND BASIC MATCHING NETWORK

D. MONOPOLE ANTENNA WITH TWO-POLE BUTTERWORTH MATCHING NETWORK FOR WIDE-BAND REPEATER

Further broadband operation of the repeater required better antenna VSWR over the designated pass band. To accomplish this, a two-pole Butterworth filter was investigated because of its maximally flat response. Further, the antenna and basic matching network described in Appendix I-C shows characteristics (constant series reactance change versus frequency) which lend itself to broadband matching. A network was then designed to have a slope opposite of this reactance change. In this manner, reactance variations over the pass band could be reduced (actually, cancelled in the neighborhood of resonance).

The network shown in Figure 30 was designed and measurements (Table III and Figures 31 and 32) show that antenna VSWR of less than 1.05 can be maintained over a bandwidth of approximately 1.5 MHz.

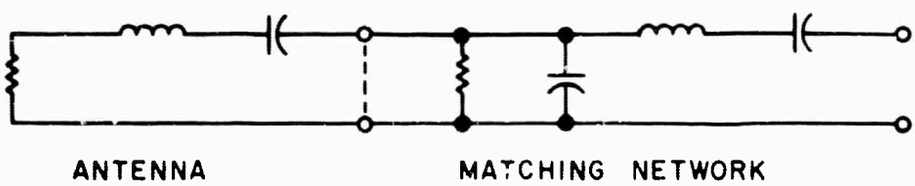

FIGURE 30. FINAL MATCHING NETWORK FOR WIDE-BAND RECEIVER

Based upon this VSWR data, the allowable amplifier gain was calculated from Figure 5 so as to specify the amplifier loop band-pass filter characteristic required. This is shown in Figure 33.

The measured impedance data and VSWR follow.

E. DISCONE ANTENNA IMPEDANCE MEASUREMENT

Antenna impedance measurements of the discone antenna, discussed in Section III-A and shown in Figure 9, indicate that even wider band antenna matching is possible. Certain tradeoffs are necessary, and the resulting system configuration may or may not be desirable, depending upon system application. Fundamental relations, discussed in Appendix I, show that a broadbanding effect can be produced by increasing the thickness-to-height ratio (r_0/H) of the antenna. This relationship is shown in Figure 21. The necessary effect is that the antenna becomes larger. Matching networks vary from simple one-pole networks for narrow-band operation to complex two- or three-pole networks for wide-band operation. The degree of complexity depends on the system gain and bandwidth desired.

The discone antenna impedance measurements are presented in Table IV and are included here as a comparison to those of the monopole antenna. Figures 34 and 35 are the graphs of the discone antenna.

Note that this antenna is resonant at 30.8 MHz where its resistance is reasonably flat and equal to 166 ohms. To bring the antenna resonance down, we would have to increase its physical length.

A matching network would be used to transform the 166 ohms to 50 ohms, a ratio of 3.3 to 1. This means that any resistance changes over a given bandwidth would be reduced by this factor. For example, a resistance change of 2 ohms yields a reflection coefficient (Γ) of 0.02 or a VSWR of 1.04 or maximum gain of 34 db at 50-ohm impedance. This means the antenna resistance could vary up to 6.6 ohms. From Figure 35, this gives a bandwidth of 30.1 to 31.6 or 1.5 MHz. This does not take into account the better match that would be achieved by adding more filters in the matching network. The matching network would also reduce the reactive variations over the bandwidth required.

TABLE III

MONOPOLE ANTENNA AND TWO-POLE MATCHING NETWORK IMPEDANCE

Frequency (MHz)	Shunt Z $R_p \pm pf$	Shunt Z $R_p \pm j X_p(\Omega)$	Series Z $R_s \pm j X_s(\Omega)$	R_s/Z_o	X_s/Z_o	Γ	G_{max} (db)	VSWR
29.40	41.5 + 14.8	41.5 - j 360	41.5 - j 4.7	0.83	-0.094	0.10	25	1.22
29.50	43.7 + 8.1	43.7 - j 650	43.6 - j 2.9	0.87	-0.058	0.07	29	1.15
29.60	45.5 + 3.6	45.5 - j 1500	45.5 - j 1.4	0.91	-0.028	0.047	31	1.1
29.70	48.0 + 1.15	48.0 - j 4500	48.0 - j 0.5	0.96	-0.01	0.02	37	1.04
29.80	50.0 - 0.3	50.0 + j∞	50.0 + j 0	1.0	0	0	37	1.00
29.90	51.5 - 0.7	51.5 + j∞	51.5 + j 0	1.03	0	0.02	37	1.04
30.00	52.1 - 0.3	52.1 + j∞	52.1 + j 0	1.04	0	0.02	37	1.04
30.10	52.4 - 0.4	52.4 + j∞	52.4 + j 0	1.05	0	0.02	37	1.04
30.20	52.2 - 0.8	52.2 + j∞	52.2 + j 0	1.04	0	0.02	37	1.04
30.30	51.8 - 1.7	51.8 + j 3000	51.8 + j 0.9	1.04	+0.018	0.02	37	1.04
30.40	50.9 - 3.2	50.9 + j 1600	50.9 + j 1.6	1.02	+0.032	0.02	37	1.04
30.50	50.0 - 6.2	50.0 + j 850	50. + j 2.9	1.0	+0.06	0.03	34	1.06
30.60	48.3 - 8.6	48.3 + j 600	48.0 + j 3.9	0.96	+0.078	0.05	31	1.105
30.70	47.2 - 13.0	47.2 + j 400	47.0 + j 5.6	0.94	+0.11	0.07	28	1.15
30.80	46.2 - 28.2	46.2 + j 185	43.6 + j 11.0	0.87	+0.22	0.14	22	1.32
30.90	45.8 - 25.5	45.8 + j 200	43.5 + j 10.0	0.87	+0.20	0.14	22	1.32
31.0	45.6 - 33.0	45.6 + j 155	41.5 + j 12.3	0.83	+0.25	0.165	21	1.40
31.1	45.4 - 40.0	45.4 + j 130	40.0 + j 14.3	0.80	+0.29	0.176	21	1.42
31.2	47.0 - 50.0	47.0 + j 100	39.0 + j 18.2	0.78	+0.36	0.23	18	1.60
31.3	49.0 - 56.0	49.0 + j 90	37.6 + j 20.5	0.75	+0.41	0.27	17	1.74
31.4	51.6 - 63.0	51.6 + j 82	36.8 + j 23.2	0.74	+0.47	0.27	17	1.74

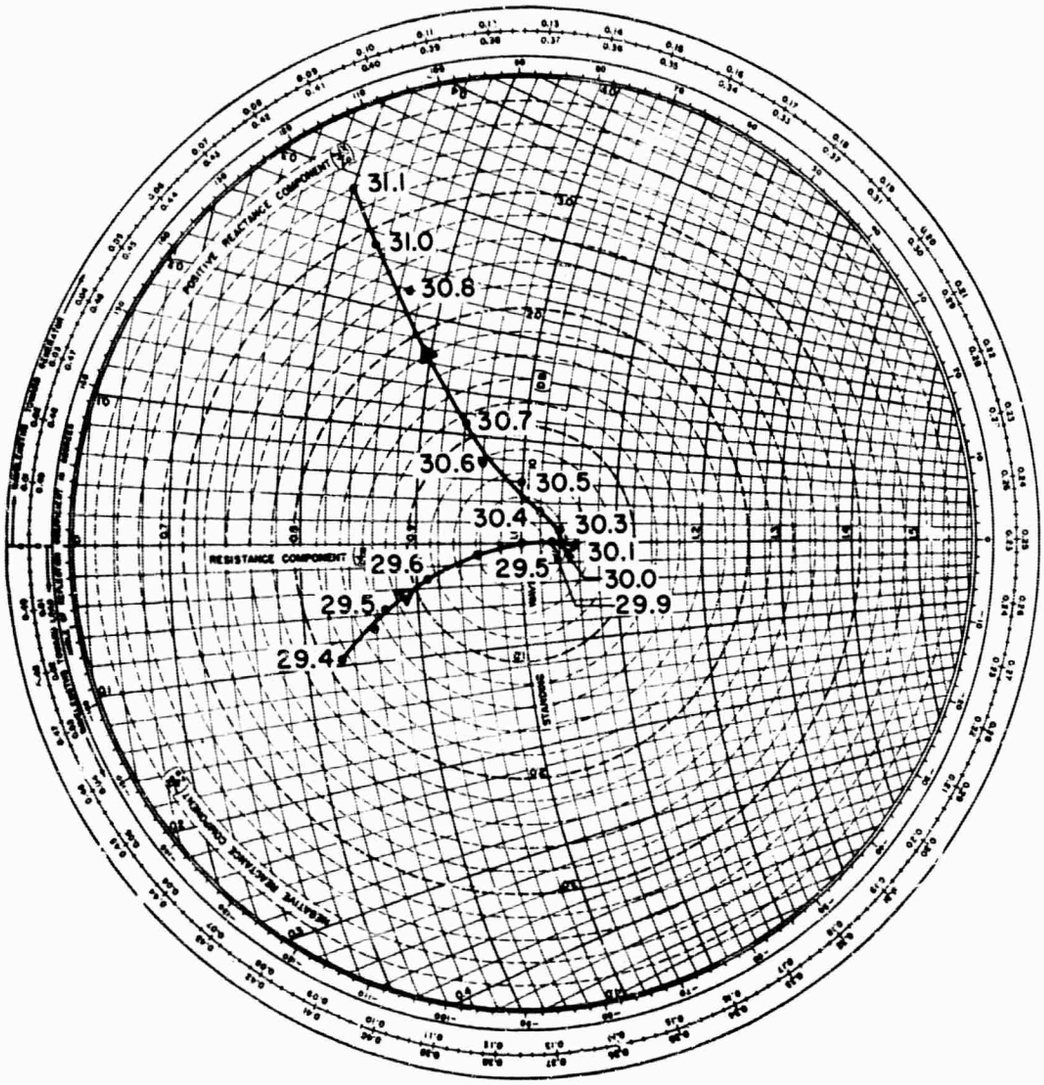

FIGURE 31. SMITH-CHART PLOT FOR MONOPOLE ANTENNA AND TWO-POLE MATCHING NETWORK VS FREQUENCY

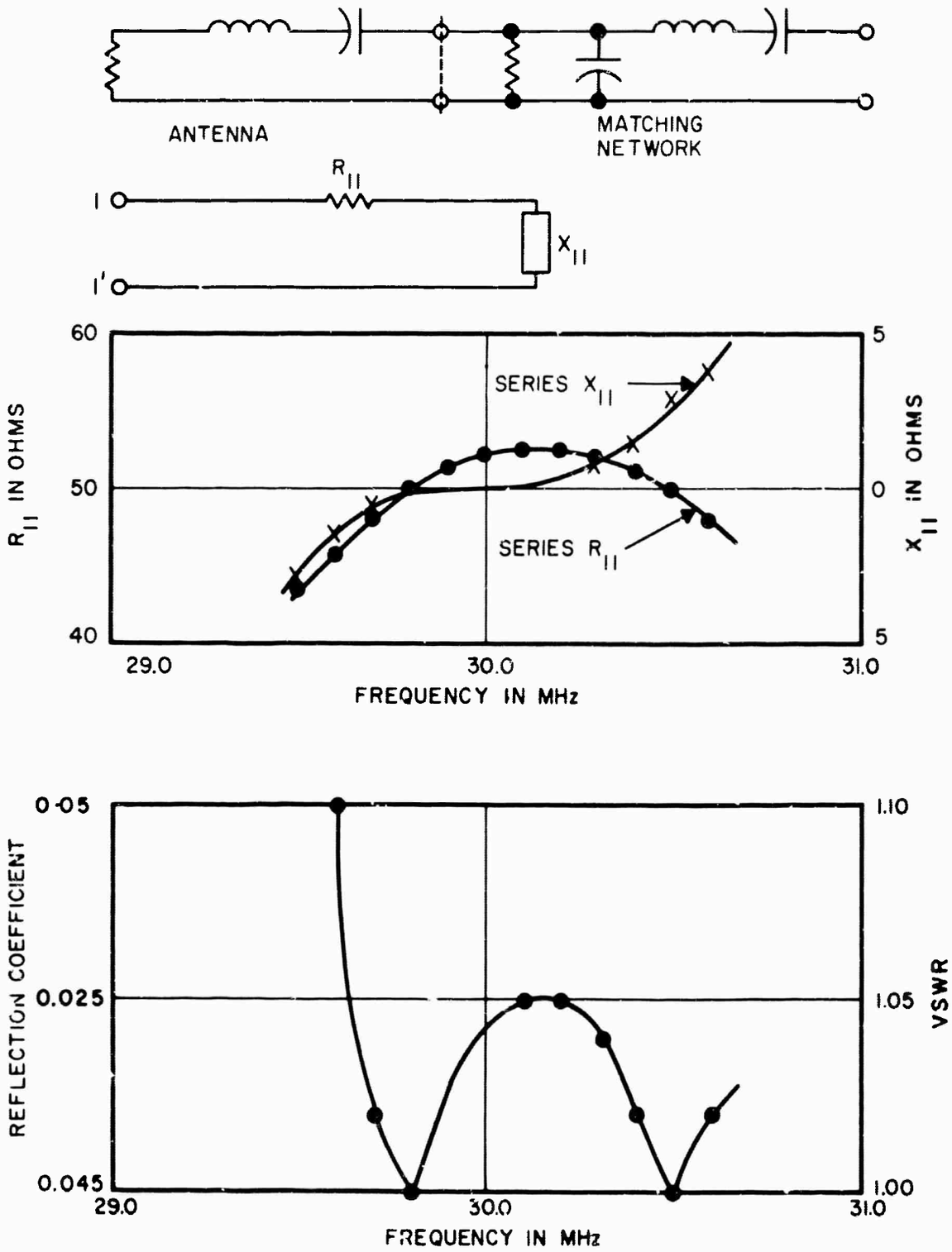

FIGURE 32. RESISTANCE AND REACTANCE VS FREQUENCY FOR MONOPOLE ANTENNA AND TWO-POLE MATCHING NETWORK

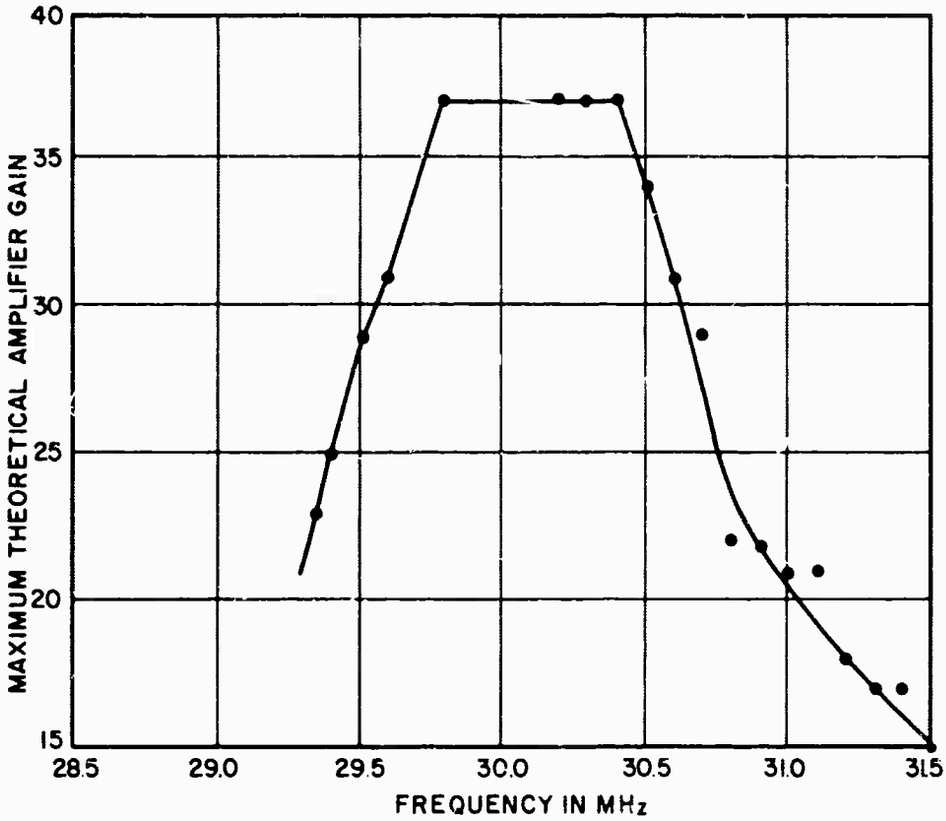

FIGURE 33. MAXIMUM AMPLIFIER GAIN VS FREQUENCY (BASED ON ANTENNA VSWR MEASUREMENTS)

TABLE IV

DISCONE ANTENNA IMPEDANCE MEASUREMENTS

Frequency (MHz)	Shunt Z $R_p \pm pf$	Shunt Z $R \pm j X(\Omega)$	Series t $R \pm j X(\Omega)$	R/Z_o	X/Z_o	X_p	B_p (m mho)	Q^2
29.000	126.5 - 53.5	126.5 + j 105	52.0 + j 62.0	1.04	+1.24	-105	-9.5	1.44
29.200	135.0 - 46.5	135.0 + j 115	57.0 + j 66.5	1.14	+1.33	-115	-8.7	1.37
29.400	142.0 - 40.0	142.0 + j 140	64.5 + j 76.5	1.29	+1.53	-140	-7.1	1.2
29.600	149.0 - 33.8	149.0 + j 160	80.0 + j 76.0	1.60	+1.52	-160	-6.3	0.87
29.800	154.0 - 27.8	154.0 + j 200	96.0 + j 74.5	1.92	+1.49	-200	-5.0	0.60
30.000	158.0 - 22.0	158.0 + j 250	113.0 + j 71.5	2.26	+1.43	-250	-4.0	0.40
30.200	162.0 - 16.6	162.0 + j 330	131.0 + j 66.0	2.62	+1.32	-330	-3.0	0.74
30.400	164.5 - 11.3	164.5 + j 440	144.0 + j 53.5	2.90	+1.07	-440	-2.3	0.14
30.600	165.5 - 6.1	165.5 + j 850	160.0 + j 30.8	3.20	+0.617	-850	-1.2	0.038
30.800	166.0 - 1.0	166.0 + j 5000	166.0 + j 0	3.32	0	-5000	-0.2	0.0011
31.000	166.0 + 3.9	166.0 - j 1300	164.0 - j 21.4	3.28	-0.428	+1300	+0.8	0.0164
31.200	164.0 + 8.7	164.0 - j 570	151.0 - j 47.5	3.02	-0.95	+570	+1.8	0.083
31.400	162.0 + 13.3	162.0 - j 380	137.0 - j 58.5	2.74	-1.17	+380	+2.6	0.182
31.600	159.5 + 18.0	159.5 - j 280	120.0 - j 68.5	2.40	-1.37	+280	+3.6	0.325

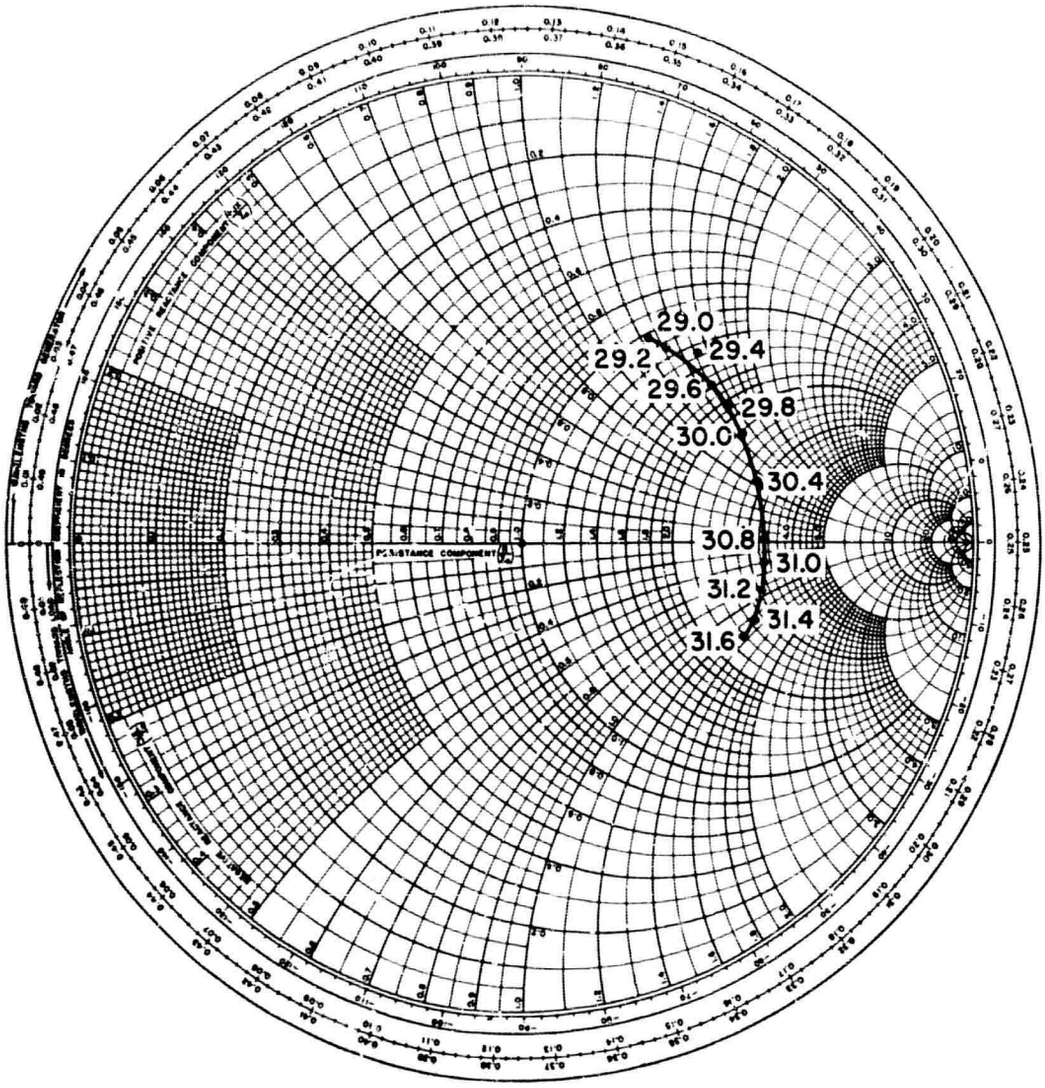

FIGURE 34. SMITH-CHART PLOT FOR DISCONE ANTENNA IMPEDANCE VS FREQUENCY

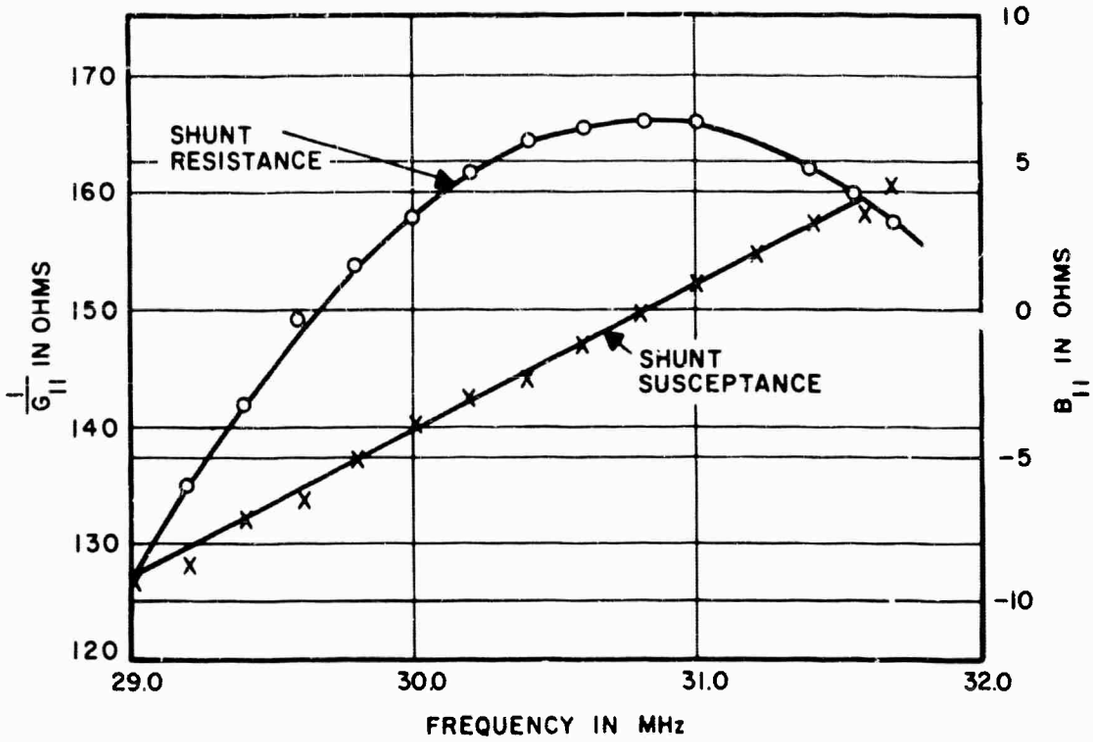

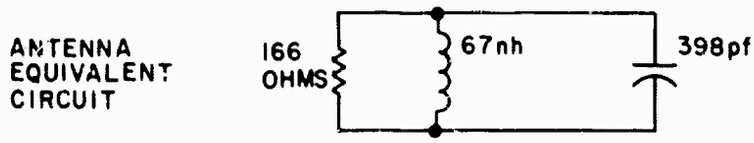

FIGURE 35. RESISTANCE AND REACTANCE VS FREQUENCY FOR DISCONE ANTENNA

APPENDIX III
HYBRID ANALYSIS

The hybrid used in the broadband F_1, F_1 repeater utilized wide-band toroidal transformers (reference 4), rather than the transmission line described in Section III-B. A circuit daigram of a basic hybrid utilizing toroidal transformers is shown in Figure 36. In this circuit, J_1 is connected to the antenna, and J_2 and J_3 are connected to the amplifier. Transformer T_1 is an impedance matching transformer. The actual hybrid is formed by T_2 and R_1. A signal entering the center tap of T_2 will divide and flow to both J_2 and J_3. The fields created by these two currents will cancel because they are in opposite directions. Through these paths, in T_2, both the input and output of the amplifier are connected to the antenna. The isolation developed between J_2 and J_3 can be understood by noting that a current injected at J_3 will divide. The current flowing to the tap is termed I_1 and the current flowing through R_1 is termed I_2. I_1 will reduce a current in the upper half of T_2 which will flow in a direction opposite to I_1. This current is termed I_3. I_3 will normally cause current to be drawn from J_2 and destroy the isolation; however, the current, I_2 flowing through R_1 is equal in magnitude and phase to I_3. I_3 becomes I_2 and ideally no current is drawn from J_3. In this way, isolation is produced between J_2 and J_3. It should be noted that I_3 is approximately 180 degrees out of phase with I_1. To cancel this current, I_2 is fed in phase through the resistive element, R_1.

The variation in the phase and magnitude of the antenna VSWR from perfect (unity VSWR at zero phase angle), can be compensated for, to some degree, in the antenna matching network. Further compensation is possible at port J_1 or the other ports of the hybrid. The impedance reflected through the antenna matching network or through the hybrid must be determined exactly for the particular antenna and frequency range. With this complex impedance information, a network is synthesized to preserve the isolation over as broad a frequency range as practical components will permit. In addition, phase and amplitude adjustment components are included in this network to compensate for impedances which do not present unity VSWR at the center frequency.

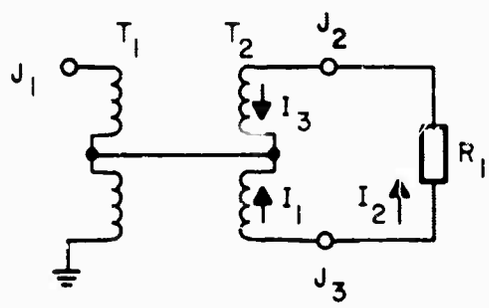

FIGURE 36. HYBRID CIRCUIT

REFERENCES

1. Jasik, "Antenna Engineering Handbook," McGraw-Hill, Section 3-2, 1961.
2. H. J. Hinden and J. J. Taub, "AIL Technical Report, Equal Element Filters," Report No. 1863-FT-1, August 1962.
3. E. C. Jordan, "Electromagnetic Wave and Radiating Systems," p 359-363, 510, 512, Prentice-Hall, New York, 1950.
4. C. L. Ruthroff, "Some Broad-Band Transformers," Proc IRE, August 1959.

UNCLASSIFIED
Security Classification

DOCUMENT CONTROL DATA - R & D

(Security classification of title, body of abstract and indexing annotation must be entered when the overall report is classified)

1. ORIGINATING ACTIVITY (Corporate author)
Airborne Instruments Laboratory
A Division of Cutler-Hammer, Inc.
Deer Park, New York 11729

2a. REPORT SECURITY CLASSIFICATION
Unclassified

2b. GROUP

3. REPORT TITLE
SINGLE FREQUENCY F_1, F_1 REPEATER

4. DESCRIPTIVE NOTES (Type of report and inclusive dates)
Final Report 1 July 1967 to 30 November 1967

5. AUTHOR(S) (First name, middle initial, last name)
Johnston, G., Redmond, K., and Thomson, G.

6. REPORT DATE
March 1968

7a. TOTAL NO. OF PAGES
58

7b. NO. OF REFS
4

8a. CONTRACT OR GRANT NO.
DAA B07-67-C-0630

b. PROJECT NO

c.

d.

9a. ORIGINATOR'S REPORT NUMBER(S)
2282-1

9b. OTHER REPORT NO(S) (Any other numbers that may be assigned this report)
ECOM-0630F

10. DISTRIBUTION STATEMENT
Distribution of this document is unlimited

11. SUPPLEMENTARY NOTES

12. SPONSORING MILITARY ACTIVITY
Advanced Research Projects Agency
Washington, D.C.

13. ABSTRACT

The objective of this study was to determine the feasibility of new technical concepts inherent in the design of F_1, F_1 repeaters. This technical report covers two novel versions of small F_1, F_1 radio repeaters designed for use with FM tactical transceivers. Both developmental models are linear, single frequency repeaters (F_1, F_1), one is high gain (50 db); the other wide-band (500 kHz).

The design of these repeaters utilizes the concepts of hybrid isolation and precise antenna matching. The results indicate that true F_1, F_1 radio repeaters are feasible.

Included are detailed discussions of:

1. F_1, F_1 repeater concept,
2. Antenna matching and broadbanding techniques,
3. Hybrid isolation,
4. Amplifier and filter development,
5. Tests and evaluation,
6. Miniaturization,
7. Future trends and goals.

DD FORM 1 NOV 65 1473

UNCLASSIFIED
Security Classification

14. KEY WORDS	LINK A ROLE	LINK A WT	LINK B ROLE	LINK B WT	LINK C ROLE	LINK C WT
Broadband						
Hybrid isolation						
Miniaturization						
Antenna matching						