AD 662209

18

U. S. ARMY NATICK LABORATORIES
Natick, Massachusetts

CLOTHING and ORGANIC MATERIALS DIVISION

Materials Research and Engineering Report
64-7

EVALUATION OF COMFORT FACTORS IN CLOTHING DESIGN

by

Louis I. Weiner
Textile Materials Research Section

DDC
DEC 7 1967

Approved: Dr. George R. Thomas, Associate Director
Clothing and Organic Materials Division

Project Reference:
1K0-24401-A113

May 1964

THIS DOCUMENT HAS BEEN APPROVED FOR PUBLIC RELEASE AND SALE; ITS DISTRIBUTION IS UNLIMITED.

Reproduced by the
CLEARINGHOUSE
for Federal Scientific & Technical
Information Springfield Va. 22151

18

Best
Available
Copy

U. S. ARMY NATICK LABORATORIES
Natick, Massachusetts

CLOTHING and ORGANIC MATERIALS DIVISION

Materials Research and Engineering Report
No. 64-7

EVALUATION OF COMFORT FACTORS IN CLOTHING DESIGN

by

Louis I. Weiner
Textile Materials Research Section

Approved: Dr. George R. Thomas, Associate Director
Clothing and Organic Materials Division

Project Reference:
1K0-24401-A113

May 1964

CONTENTS

		Page
Abstract		iv
I.	Introduction	1
II.	A General View of Heat Transfer Mechanisms in Clothing	1
III.	Schlieren Technique for Studying Still Air Layers	3
IV.	Schlieren Technique for Determining Optimum Air Movement for Comfort	8
V.	The Role of Moisture in Heat Transfer Through Clothing Systems	10
VI.	Units of Measurement for Heat Transfer	11
VII.	Summary	14
VIII.	References	14

ABSTRACT

New evaluation techniques and new units of measurement have become available in recent years to characterize comfort factors in clothing design. A brief review is presented of some of the latest work in these areas with a view to stimulating interest on the part of the clothing designer and textile technologist in making greater use of the new methodology.

EVALUATION OF COMFORT FACTORS IN CLOTHING DESIGN

I. Introduction

The physiologist is concerned with the total energy transfer process in the human organism. He considers the metabolic process in its entirety: the sources of energy in food, the conversion of energy to heat and work, and the loss of energy by excretion and respiration and through the skin by perspiration, conduction, convection, and radiation. The clothing designer, on the other hand, takes a narrower view of energy transfer. He is usually concerned only with the heat that is lost through the skin. If, through the interposition of clothing, the heat loss from the skin can be kept in equilibrium with the metabolic heat production, the designer is well satisfied. For many of his problems, he considers the temperature of the skin as constant but the production of perspiration as variable.

As a result of this simplification, a great variety of equipment has been developed to simulate the skin surface in terms of emissivity, temperature, and moisture. Many types of measurements have been made to characterize the nature of the heat transfer process through clothing systems. Clothing materials have been found to be unique in the high level of protection they afford against the environment and in the manner by which they participate in the loss of heat from the skin (through radiation, convection, conduction, and evaporation). While it has not been possible to express protection in exact quantitative terms, these measurements and practical field observations permit certain general conclusions to be drawn about the mechanics of insulation. This report presents these conclusions and describes new equipment and descriptive units now available for more precisely measuring heat transfer through clothing.

II. A General View of Heat Transfer Mechanisms in Clothing

Observations and measurements indicate that the overall insulation provided by a textile fiber system such as cloth is a function of the thickness of the air that is trapped or immobilized by the fibers, for still air is without equal in providing insulation. In addition to the air trapped within the interstices of the fabric structure and within the inter-fiber spaces, a significant amount of air is trapped on the fabric surface because of the hairiness of even the smoothest of textiles, if the individual fibers project in a relatively perpendicular direction from the fabric surface. The stillness of the air trapped at the surface is a function of wind velocity; at high velocities the surface film of air disappears and loses its usefulness.

Most fibers used for clothing insulation possess long range elasticity, a property which enables the fabric structure to return to its original dimensions and configurations after being repeatedly deformed. Wool and polyesters possess this property to a considerable extent in the wet as well as the dry condition, thus the essential thickness of fabrics made from these fibers, and as a consequence their insulation, may be maintained throughout the life of an item.

Fibers that absorb moisture often have a peculiar thermostatic effect which can be of considerable significance in providing warmth to the body under some circumstances. Wool, for example, will liberate heat when transferred from a warm and dry to a cold and damp environment. This source of warmth is significant when a person dons a wool coat prior to going outdoors in the winter. Cassie (1) has computed that 150 kilocalories of heat, which is equivalent to the heat produced by a resting man in 1-1/2 hours, will be liberated from an average suit when it is transferred from an environment of 64°F and 45 percent RH to one of 41°F and 95 percent RH.

Convective heat transfer is a significant mode of heat loss from the body. It has been estimated that, in still air, 2 inches of free air space within the clothing is as effective in providing cooling as no clothing at all. Even 1 inch of air space provides significant convective cooling. For heat balance, the total metabolic heat production will equal the sum of this convective heat loss plus conductive loss through the fabrics, radiative loss from the fabric surfaces and, of course, evaporative loss. But, under still air conditions at about 80°F, the convective loss is only about 10 percent of the evaporative loss. This limits the amount of cooling that can take place by "spacer" systems within clothing when air temperature is near skin temperature since convection depends upon differences in gas density as influenced by temperature. It appears, therefore, that the use of spacer systems to obtain convective cooling is limited to cool temperatures and high humidity, and to hot temperatures and low humidity.

Radiative heat loss, both within and without the clothing system, was studied by Woodcock (2). He found that the reduction in radiative heat loss by metallic coatings on textiles used for linings is relatively insignificant as compared to the heat loss by conduction. Heat transfer by radiation from one surface to another is independent of the distance between them, whereas heat transfer by conduction decreases with increased distance. Clothing is a good radiation shield at long wave lengths; metallic-particle coatings on textiles are good reflectors at short wave lengths but not at long. With respect to the outer layer of the clothing, color assumes significance with respect to radiation from the surface. It would be expected that light fabrics would reflect more sunlight outward, however, this reflection also scatters heat down into the fabric--particularly into a pile fabric--thus making the radiant energy from the sun effective in warming the area beneath the clothing.

The most complex problem in heat transfer involves evaporative diffusion and wicking by which the moisture from perspiration distributes itself through the clothing system and travels from the skin surface to the outside (3). The latent heat of evaporation of water is 580 calories per gram. As much as 25 percent of the total metabolic heat loss when at rest is by the evaporation of insensible perspiration. Perspiration escapes as water vapor through the pores of a fabric and as a liquid by fiber wicking or capillary action. The diffusion resistance of water vapor has been characterized in a number of ways but usually it is compared to that of an equal thickness of air. The wicking of liquid water, on the other hand, is a function of the inter-facial force between the fiber surface and the water. The surface tension of the water and the fabric pore distribution and dimensions all have a bearing on the rate of wicking. Since wicking and water vapor diffusion take place simultaneously, the overall rate of fluid transfer will be a function of both processes. The problem is complex. If a large amount of sweat is secreted under hot conditions, it will be rapidly transferred to the outside by a highly wicking fabric. Most of the heat for its evaporation will come from the outside, hence, it will not result in much cooling of the skin. In addition, the transferral process may lead to blocking of the pores in the fabric and this will reduce the moisture vapor diffusion. However, if there is no wicking, the sweat will remain on the skin surface. It would thus appear that moderate wicking in a fabric might be desirable, but this would depend on the particular fabric system involved.

In summary, the various methods by which heat is lost by the skin to the outside may be divided into two general categories: "dry heat" transfer, and "wet heat" transfer. The specific methods of dry heat transfer are conduction, convection, and radiation. The specific methods of wet heat transfer are diffusion, convection, and conduction. The paths of heat transfer between the body and its surroundings have been interestingly illustrated in the March 1963 issue of Wool Science Review (3), and are reproduced here as Figure 1. The thickness of the arrows signifies the proportion of heat transferred by the fibers or through the pores of a clothing assembly. This figure demonstrates that conduction takes place through the fiber substance itself as well as through the fabric pores; convection and radiation are limited to the pores.

III. Schlieren Technique for Studying Still Air Layers

One of the newer methods for studying heat transfer phenomena in clothing is based on the Schlieren optical system which has been used extensively for analyzing the air-flow patterns that are associated with rapidly moving objects. The principle involves catching the stray rays created by the refraction of light when it passes through a gas differing in density from the surrounding medium. The stray rays from the object itself are captured to provide a background that will inform the observer where the disturbances are occurring. For example, Figure 2 shows a ray

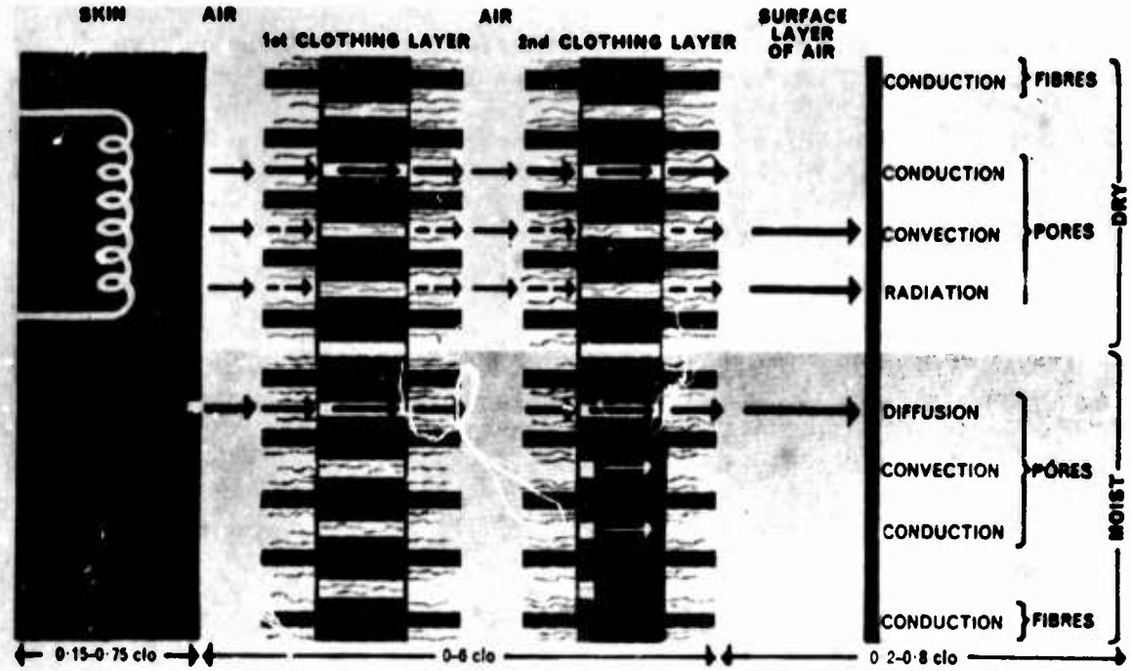

Figure 1. Routes for heat transfer through clothing

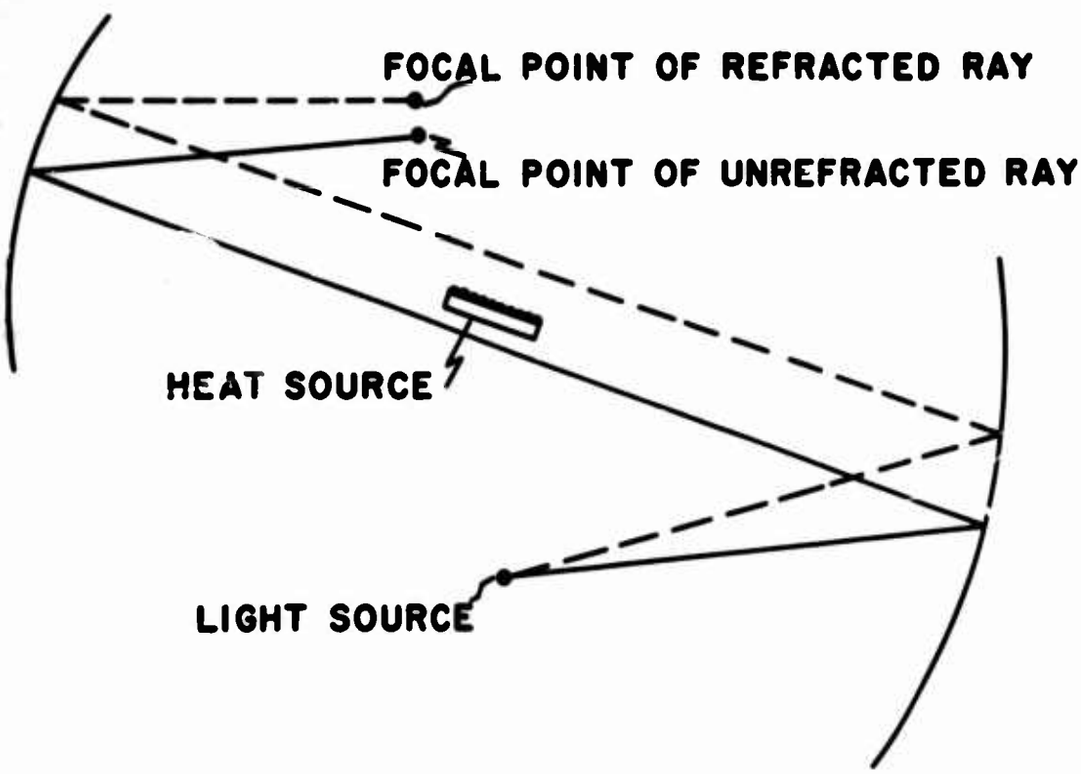

Figure 2. Refraction of light ray in Schlieren system

from the light source passing in the vicinity of a heat source where it is slightly refracted so that it comes to focus at a different point in space than the balance of the unrefracted rays. Normally such spurious rays are never detected because they are obscured by the great amount of light provided by the unrefracted rays. However, if a knife edge is placed so as to cover the focal point of the unrefracted rays, then the refracted rays can be detected by a camera properly located in the field.

The complete optical system is relatively simple. Heavy mounts for the components are required to maintain stability. The alignment of the optical components to obtain the maximum contrast between the heated air layers and the surrounding background is the most difficult problem, but once the alignment is achieved, use of the equipment can be quite routine. A diagrammatic sketch of the equipment (Fig. 3) shows the relative positions of the light source, parabolic mirrors, knife edge, and camera. The material to be studied (indicated as "Schlieren cell" in Fig. 3) may be located at any point within the parallel beam of light between the two mirrors. For studying fabrics, a horizontal thermal plate maintained at a fixed

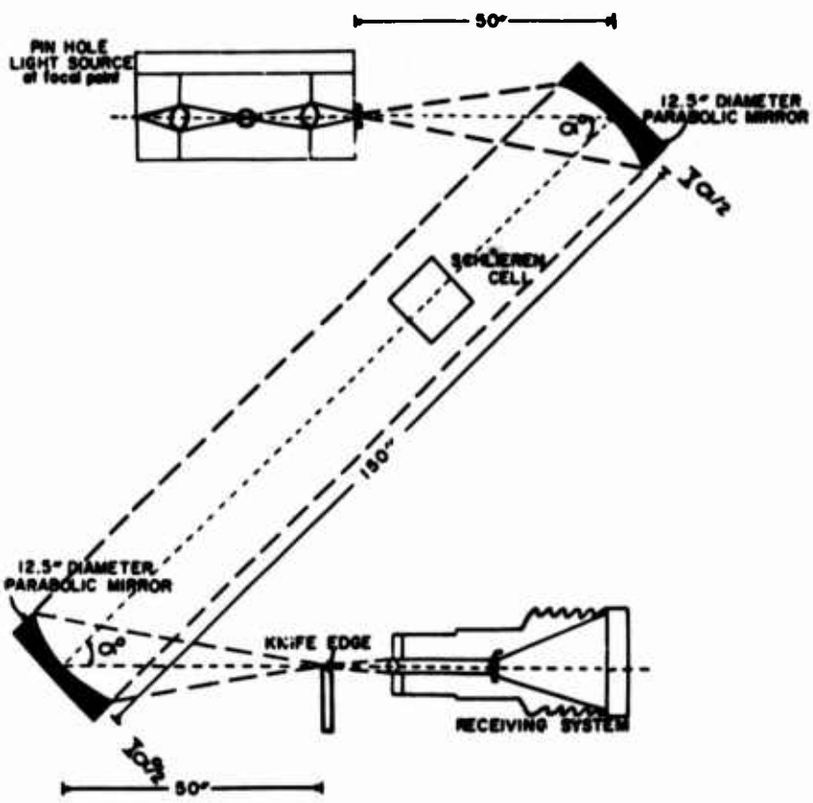

Figure 3. Schlieren Optical System

temperature is normally used. For studying simulated clothing systems, gases of varying density are used to simulate the convection currents of the water vapor in an ambient air environment. Helium is a good gas for this purpose because it furnishes considerable contrast with air.

In Schlieren photographs of relatively thin and relatively thick fabrics (Fig. 4), using a horizontal thermal plate maintained at a temperature of 250°F in still air, the darker portion of each print represents the "still" air layer. With no fabric on the plate, this layer extends .75 inch above the plate at the high point near the center. With the rayon tropical-type fabric and the tropical worsted, the air layers measure .60 and .50 inch, respectively. The greater thickness of the air layer over the bare plate as compared to that over the fabrics indicates that the temperature at the surface of the fabric was less than that at the surface of the bare plate and, hence,

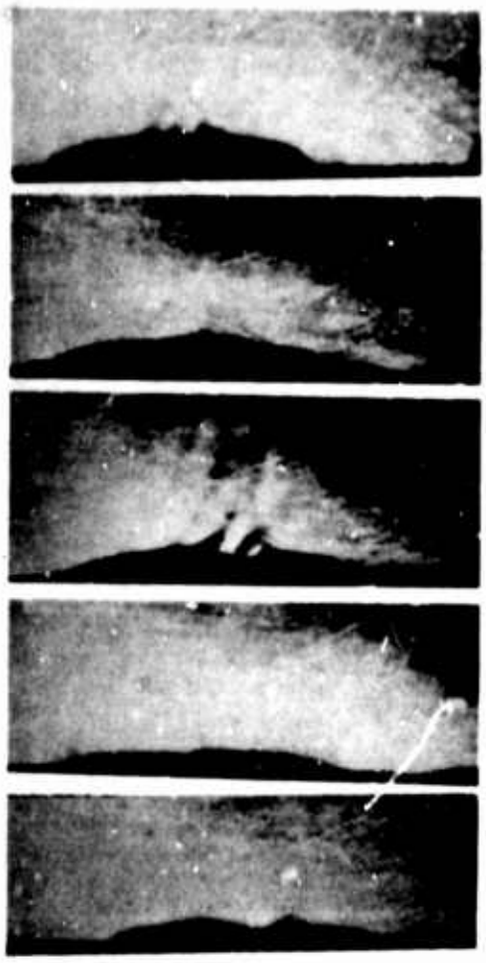

NO FABRIC ON PLATE

RAYON TROPICAL TYPE FABRIC

WORSTED TROPICAL

FRIEZE FORTISAN COMBINATION; FORTISAN AGAINST PLATE

FORTISAN FRIEZE COMBINATION; FRIEZE AGAINST PLATE

Figure 4. Schlieren photographs of fabric surfaces

that the fabric provided some degree of insulation. The photograph of the tropical worsted is particularly noteworthy because of the streaming effect shown where the fabric was not flat against the thermal plate.

Figure 5 shows that the thickness of the air layers is related to the thickness of the fabric. It also shows that, in the fortisan and wool friezes, the relative position of each fabric influences the thickness of the still air layer. All of these measurements were made in still air; when a momentary blast at 30 miles per hour was jetted across the fabric surface, the thickness of the air layer was reduced to that of the upper surface of the projecting fibers. When the jet was shut off, the layer rapidly regained its size and shape.

SAMPLE	ARRANGEMENT OF SAMPLE	WEIGHT OZ/SQ.YD.	THICKNESS OF FABRIC (")		THICKNESS OF AIR LAYER
			AT 0.01 PSI	AT 0.1 PSI	
NO FABRIC	HOT PLATE	—	—	—	0.75
RAYON TROPICAL	HOT PLATE	6.7	—	0.020	0.60
TROPICAL WORSTED	HOT PLATE	6.7	—	0.020	0.50
FRIEZE FORTISAN	HOT PLATE	16.0 1.8	0.29	0.007	0.30
FORTISAN FRIEZE	HOT PLATE	1.8 10.0	0.29	0.007	0.40

Figure 5. Thickness of still air mass over surface of heated fabrics

IV. Schlieren Technique for Determining Optimum Air Movement for Comfort

One important application of the Schlieren technique is in the evaluation of the ventilation mechanisms in simulated clothing. Hollies (4), using helium as a simulant for water vapor evaporation from the skin, determined the relative positions of the air and helium in model spacer systems by the differences in their refractive indexes. A spacer cell connected in series with a wind tunnel was placed between the two parabolic mirrors of the Schlieren apparatus. The cell had a square cross section with two glass plates, comprising the front and rear of the cell, for light transmission. One of the sides of the cell consisted of a metal plate that could be moved to produce air spaces of up to 3 inches and through which cold water could be circulated to produce a temperature differential. The opposite side consisted of a holder for an unglazed porcelain plate through which helium could be bubbled to simulate water vapor transmission. Controlled air flow was produced by a Frazier air permeability device attached to the wind tunnel.

The purpose of Hollies' studies was to determine the influence of the velocity of air flow on the extent of the mixing of the helium (sweat simulant) with air; to examine the effect of various types of configurations such as rods, coils, and compound curves within the space on natural turbulence; and to estimate the size of spacing required to obtain a reasonable amount of convective cooling. The studies demonstrated the importance of maintaining channels of one inch or more for proper air flow. A forced downward flow of air through the spaces in opposition to the upward natural convection flow was found to produce more turbulence and mixing than when both convective streams moved together. This explains the greater evaporative cooling observed in counterflow experiments.

The spacer elements, consisting of compound curves and baffle designs (Fig. 6), led to turbulence over a broad air velocity range. The coil-type spacer elements (Fig. 7) produced more streamlined air flow, thus lessening the contact between the water vapor simulant (helium) and the circulating air.

The greatest mixing of air and helium occurred in the linear flow range of less than 100 feet per minute for one- to three-inch spaces. Optimum air turbulence and reduction in boundary layer thickness occurred at an air flow range of .03 to .76 miles per hours. This provides a useful design figure for the construction of air impellers to be used in spacer clothing.

While the use of the Schlieren technique in comfort studies has only just begun, the data obtained to date indicate that this may be a useful analytical procedure for probing the micro-aerodynamics of clothing systems.

Figure 6. Turbulence-inducing spacers

Figure 7. Streamlined flow with coil-type spacer

V. The Role of Moisture in Heat Transfer Through Clothing Systems

The amount of sweat which can be secreted for evaporative cooling is one liter per hour over an eight-hour period. This amounts to an evaporative heat loss of 333 kilocalories per square meter per hour from the body, which is sufficient to compensate for major changes in heat production. The secretion of sweat in hot climates is an asset in the amount of 580 calories per gram if it can be evaporated. In cold climates, of course, this amount would be a liability. However, this liability can be converted to an asset if the process of evaporation and diffusion is accelerated during periods of high activity in cold climates. Thus, there are conditions under which clothing seriously impairs the transfer of heat from the body to the outside.

Recent studies have indicated that, during periods of high activity, the new hydrophobic man-made fibers are superior to wool (the conventional insulant) in transferring moisture and heat away from the body. The studies were made by Woodcock (5) and Fourt (6) in connection with evaluations of the non-equilibrium heat transfer of textiles in the presence of moisture.

The Woodcock experiment used simulated clothing employing a synthetic pile fabric as the low moisture absorbing (hydrophobic) system and a woolen shirting as the high moisture absorbing (hydrophilic) system. The experimental arrangement was such that the heat loss through each of the ensembles could be measured while dry at a temperature drop of 30°F between the hot plate and ambient area. At a predetermined time, an impermeable film over a water source under the fabric was removed, allowing the water to evaporate and the vapor to be absorbed by or to pass through the fabric systems. Later the impermeable film was replaced, after which time any excess heat loss from the fabrics would be due only to the evaporation of water already trapped. Up to the end of the first hour, as illustrated in Figure 8, the rate of heat transfer through both fabric systems (dry) was approximately equal at a little over 7 watts. At the end of the first hour, the impermeable film was removed. The heat transfer through the man-made fiber system jumped rapidly to a little over 11 watts while that of the high moisture absorbing wool system rose slowly to approximately 9 watts. Thus, in a situation which corresponds to high activity, the synthetic fiber system was more efficient in passing on heat and therefore should be more comfortable to the wearer. After 4 hours, the impermeable film was replaced. The heat loss through the synthetic fiber system then dropped rapidly until it was close to the initially observed dry-heat level. The wool system, on the other hand, continued to lose heat at a relatively constant rate and did not tend to stop this heat loss until seven hours had passed. Thus, in a situation of rest following exercise, the man-made fiber system would be more efficient in conserving body heat.

These findings, though preliminary, suggest that it may be desirable to reconsider the role of wool as an insulant for cold-weather use. Wool

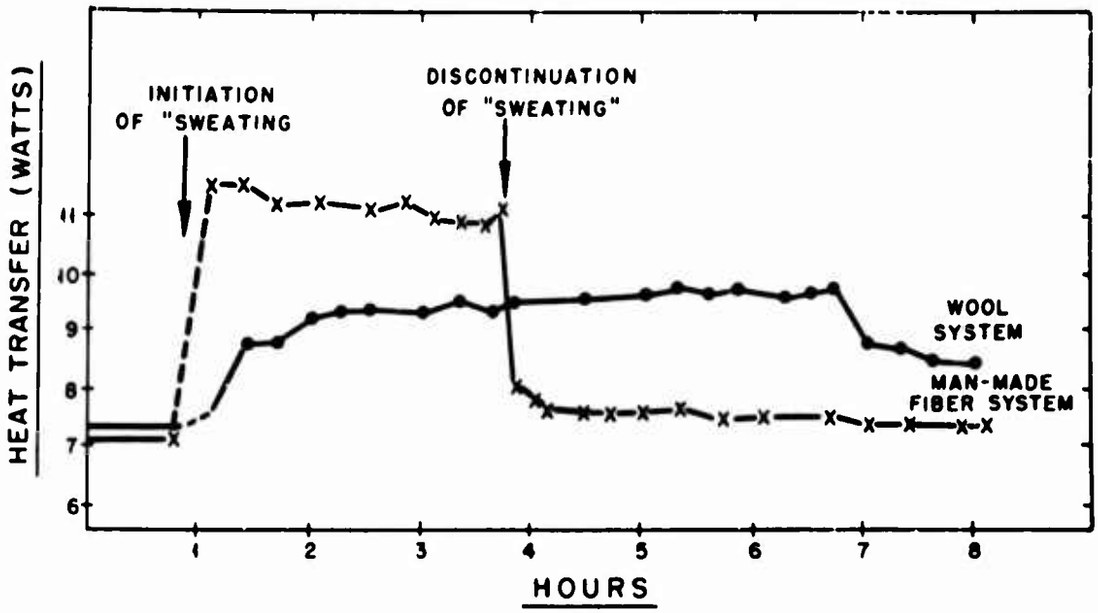

Figure 8. Heat transfer through textile fabric systems under conditions of simulated "sweating"

is unquestionably an excellent fiber and has been the traditional insulant for military as well as civilian clothing. But data such as these indicate the advisability of re-examining the mechanisms of heat transfer under non-equilibrium conditions with a view to obtaining a better understanding of the role of fiber types in simulated "sweating" situations. The expanding availability of synthetic piles, battings, and other man-made-fiber insulating materials make research in this area of considerable practical significance at this time.

VI. Units of Measurement for Heat Transfer

Two units for dry heat transfer have been in use for some time. The Tog, an English term, refers to the thermal resistance that will maintain a temperature difference of 10°C with a heat flux of 1 watt per square decimeter. The Clo, an American term, refers to that insulation required to keep a man comfortable at a temperature of 70°F, at a relative humidity of 50 percent, and in the absence of any significant wind velocity (i.e., .88°F/BTU/hr/ft^2). A normal business suit represents one Clo. The value of these units to the designer is that both are relatable to practical situations with which he is familiar. Military items, such as blankets and sleeping bags for cold weather use, are designed to provide a predetermined number of Clo. For example, the arctic sleeping bag is required to provide 6 Clo of insulation.

One outgrowth of the studies of wet heat transfer in textiles has been the introduction of new units of measurement that characterize the performance of materials in terms of concepts that are also readily usable by the clothing designer. Hardy, Ballou, and Wetmore (7) suggested the use of four "thermal resistance" factors, designated as P_1, P_2, P_3 and P_4, to characterize the four mechanisms of heat transfer from the body: conduction, convection, radiation, and evaporation, respectively. By summing the quotients of the differences between the skin and the environmental temperature or vapor pressure, the total heat loss from the body can be computed.

Woodcock (8) extended the work on evaporative heat loss and introduced a new dimensionless factor known as the moisture permeability index, which he designated as i_m. This factor, which ranges in value from zero to unity, can be used to characterize the ability of a fabric or fabric system to transfer evaporative heat in the same sense that the Clo factor is used to characterize the transfer of dry heat. Measurements of i_m indicate that the higher the value of this index the wider the range of situations in which thermal balance can be maintained. Studies are now being made to characterize a variety of materials in terms of this moisture permeability index and to compare the results with those of conventional tests of moisture vapor transfer. The major advantage of the index is that it expresses the results of moisture transfer in a form that can be directly related to the overall heat transfer of the clothing system.

With the availability both of the Clo factor, for evaluating the thermal resistance of dry clothing systems, and of the i_m index, for evaluating a system in terms of its ability to transfer heat by moisture diffusion, it appears possible to characterize the protection afforded by a given clothing system by these parameters. Conversely, by knowing the temperature and humidity range for which we wish to design clothing, it is possible to compute the appropriate Clo and i_m factors needed. Work along these lines is still in its preliminary stages of development. Nevertheless, Woodcock developed two nomograms (Fig. 9) which provide an indication of the Clo and i_m levels required to meet specifications.

One of Woodcock nomograms is concerned with the determination of dry insulation in terms of the Clo required to meet a given set of body and environmental conditions. Body conditions are expressed in terms of metabolic heat loss in kilocalories per square meter per hour and environmental conditions are expressed in terms of the lowest temperature for which protection is required. For example, if we wish to protect a man at rest (producing 50 kg-cal/m^2/hr of heat) at a temperature of minus 30°F, we would need 7.5 Clo of insulation. This value is obtained on Nomogram No.1 by connecting the point equivalent to 50 kilocalories per square meter per hour on the right with the point equivalent to -30°F on the left. This line crosses the Clo line at 7.5 Clo.

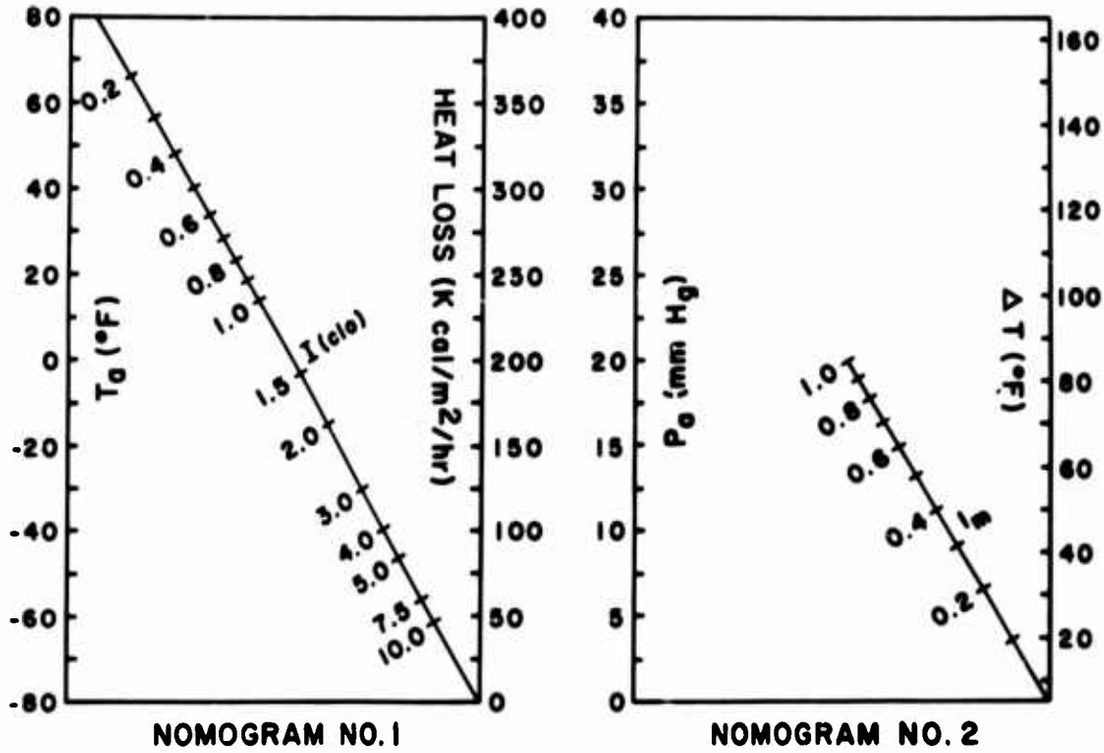

Figure 9. Woodcock Nomograms

Nomogram No. 2, concerned with wet insulation, determines the i_m required of a fabric system to protect a man within a range of environmental temperature and humidity conditions. For a range of environmental temperature from minus 30°F to plus 40°F ($\Delta T = 70°$) and a vapor pressure of 5 millimeters of mercury, we would require a moisture permeability index in the fabric system of 0.49. The relative humidities equivalent to a vapor pressure of 5 millimeters may be obtained from standard tables of saturated vapor pressure. For example, at a temperature of plus 40°F, the saturated vapor pressure of water is equivalent to 6.294 millimeters of mercury. The relative humidity at a vapor pressure of 5 millimeters of mercury at this temperature would be 100 times the ratio of 5 to 6.294, or 80 per cent.

It should be pointed out that the development of nomograms such as these is still in its preliminary stages and more work is required before they can be used without qualification. However, they do provide a means of obtaining first order approximations for difficult design problems and, as such, these nomograms may be of value to the clothing designer.

VII. Summary

This brief review has attempted to highlight some of the recent advances in heat transfer technology as applied to textile fabric systems which should be of interest to the clothing designer. The instrumentation that is now available for characterizing clothing systems in terms of convective heat flow, still air layers, dry heat transfer, and moisture vapor transfer provide a means for obtaining quantitative data that were not available to technologists in the past. The new descriptive units are parameters which have significant meaning and thus they should provide a common basis for discussion as well as establishing performance levels for the materials of clothing and equipage items. It has often been said that significant advances in science and technology cannot be made unless the results of studies can be expressed quantitatively. The time is now approaching when clothing design will be capable of quantitative interpretation and the era of the "science of clothing" will be ushered in.

VIII. References

1. Cassie, A.B.D., Reports on Progress in Physics, 10, 146 (1946)

2. Woodcock, A.H., Climate, Health and Disease (in press)

3. Wool Science Review, March 1963

4. Hollies, N.R.S., "The Schlieren Method Applied to Air Mixing and Boundary Layers in Model Clothing Spacer Systems," QM R&E Comm., Clothing Branch Report No. 23, Natick, Mass., (June 1961)

5. Woodcock, A.H., "Moisture Transfer in Textile Systems," QM R&E Comm., EPRD Research Study Report BP-9, Natick, Mass., March 1961

6. Fourt, L., "Conference on Military Applications of Blended Fabrics," QM R&E Comm., Textile Series Report No. 119, Natick, Mass., May 1960

7. Hardy, H.B., J.W. Ballou, and O.C. Wetmore, "The Prediction of Equilibrium Thermal Comfort from Physical Data on Fabrics," Textile Research Journal, 23, (1) 1-10 (1953)

8. Woodcock, A.H., "Moisture Transfer in Textile Systems, Part I," Textile Research Journal, 32, (8) 628 (1962)