AD659153

RADC-TR-67-385

MICROWAVE ALL-PASS NETWORKS

J. O. Scanlan
J. D. Rhodes
University of Leeds

TECHNICAL REPORT NO. RADC-TR-67-385
July 1967

This document has been approved for public release and sale; its distribution is unlimited.

Rome Air Development Center
Air Force Systems Command
Griffiss Air Force Base, New York

D D C
OCT 10 1967

69

When US Government drawings, specifications, or other data are used for any purpose other than a definitely related government procurement operation, the government thereby incurs no responsibility nor any obligation whatsoever; and the fact that the government may have formulated, furnished, or in any way supplied the said drawings, specifications, or other data is not to be regarded, by implication or otherwise, as in any manner licensing the holder or any other person or corporation, or conveying any rights or permission to manufacturer, use, or sell any patented invention that may in any way be related thereto.

ACCESSION for
CFSTI WHITE SECTION
DDC BUFF SECTION
UNANNOUNCED
JUSTIFICATION
BY
DISTRIBUTION/AVAILABILITY CODES
DIST. AVAIL. and/or SPECIAL
1

Do not return this copy. Retain or destroy.

MICROWAVE ALL-PASS NETWORKS

J. O. Scanlan
J. D. Rhodes
University of Leeds

This document has been approved
for public release and sale, its
distribution is unlimited.

AFLC, GAFB, N.Y., 1 Oct 67-50

FOREWORD

This technical report describes the research performed at the University of Leeds, Leeds, England by J. O. Scanlan and J. D. Rhodes under contract AF61(052)-925, project 4506. The work was made possible by the cooperative efforts of the University of Leeds, the European office of the Air Force Office of Aero Space Research and the Rome Air Development Center. The Air Force Office of Aero Space Research Monitor was L/C Donald C. Kipfer and the project engineer was Haywood E. Webb, Rome Air Development Center, EMIA, Griffiss Air Force Base, N.Y. 13440.

This is one of a series of two reports treating the synthesis of microwave wide band networks from a transfer point of view. It is assumed that what one desires to achieve is a transfer characteristic $T(W) = A(W) \operatorname{Exp}[ic(W)]$. One approach in the realization is to synthesize by cascading an airpass network with a constant delay network. The first case is treated here, and the second case is treated in RADC TR-67-384 - "Microwave Networks with Constant Delay", by J. O. Scanlan and J. D. Rhodes. Since the work is closely related to other RADC sponsored research, the reader may also be interested in RADC TDR-63-369, "Network Synthesis with Multiwire Lines", by A. Matsumoto and RADC TDR-64-505, "Network Synthesis with Transmission Line Elements", by H. J. Carlin.

This technical report has been reviewed by the Foreign Disclosure Policy Office (EMLI) and the Office of Information (EMLS) and is releasable to the Clearinghouse for Federal Scientific and Technical Information.

This technical report has been reviewed and is approved.

Approved: HAYWOOD WEBB
Task Engineer

Approved: EDWARD N. MUNZER
Chief, Intel Applications Branch
Intel & Info Processing Div

ABSTRACT

In this paper it is shown that any arbitrary delay characteristic of a commensurate microwave network which supports a T. E. M. mode of propagation, may be realised by means of a transformerless, coupled-line network within an arbitrary additive constant. The realisation procedure presented is based upon the synthesis of microwave C-type and D-type all-pass sections. Synthesis procedures are also developed for the direct realisation of a complete all-pass network which include interdigitial line structures.

The application of microwave all-pass networks to the phase correction of conventional microwave filters and to the construction of delay networks with linear delay characteristics is also presented.

TABLE OF CONTENTS

Section		Page
I	INTRODUCTION	1
II	DELAY CHARACTERISTICS OF MICROWAVE ALL-PASS NETWORKS	3
III	COUPLED-LINE REALISATIONS OF THE MICROWAVE C-TYPE AND D-TYPE ALL-PASS SECTIONS	15
	C-Type Section	15
	C-Type Section and Unit Element	16
	D-Type Section	19
	D Type Section and Unit Element	21
	Network N_A	24
	Network N_B	27
IV	GENERAL SYNTHESIS PROCEDURES	36
	Synthesis Using a Cascade of Two-Wire Lines	36
	Synthesis Procedure Using an Interdigital Line	39
V	APPLICATIONS	49
VI	PHASE CORRECTION OF A CONVENTIONAL MICROWAVE FILTER	51
VII	ALL PASS NETWORKS WITH LINEAR DELAY CHARACTERISTICS	57
VIII	CONCLUSIONS	61
	REFERENCES	63
	LIST OF ILLUSTRATIONS	vi

LIST OF ILLUSTRATIONS

Figure	Title	Page
1 (a)	Delay Characteristics of the Microwave C-Type Section	6
1 (b)	Delay Characteristics of the Microwave C-Type Section	6
2 (a)	Delay Characteristics of the Microwave D-Type Section	8
2 (b)	Delay Characteristics of the Microwave D-Type Section	9
2 (c)	Delay Characteristics of the Microwave D-Type Section	10
2 (d)	Delay Characteristics of the Microwave D-Type Section	11
2 (e)	Delay Characteristics of the Microwave D-Type Section	12
2 (f)	Delay Characteristics of the Microwave D-Type Section	13
3	A Symmetrical Two-Wire, Coupled-Line Network Realising the Microwave C-Type Section	15
4	A General, Symmetrical, Two-Wire Coupled Line	18
5	A Realisation of the Microwave C-Type Section in Cascade With A Unit Element	20
6	A Cascade of Two, Two-Wire Lines Realising the Microwave D-Type Section	20
7	Realisability Contour for the Realisation of the Microwave D-Type Section	21
8	The Physical Realisation of the Network N_A	26
9	The Parallel Connection of the Networks N_A and N_{B2}	29
10	The Parallel Connection of the Networks N_A and N_{B1}	31
11	The Element Values Resulting From the Combination of the Networks N_A and N_{B1}	35
12	A Cascade of n, Two-Wire Lines	38
13	The Even-Mode Network Resulting From the Interdigital Realisation of a Microwave D-Type Section in Cascade With a Unit Element	47
14	The Interdigital Network Realising a Cascade Microwave D-Type Section and Unit Element	47
15	The Delay Characteristic For the Five Element, Stepped, Impedance Transformer Considered in the Numerical Example	52

LIST OF ILLUSTRATIONS (Continued)

Figure	Title	Page
16 (a)	The Delay Characteristics of the Microwave C-Type and D-Type Sections Considered in the Numerical Example	53
16 (b)	The Delay Characteristics of the Microwave C-Type and D-Type Sections Considered in the Numerical Example	54
17	Idealised Delay Characteristic	58

INTRODUCTION

In the design of microwave filters and matching networks, specifications frequently demand constraints upon both the amplitude and phase responses over the operating band. It has been shown, by using a general cascade synthesis procedure for distributed networks[1], that any amplitude characteristic may be approximated by a network whose delay is constant at all frequencies[2]. The purpose of this paper is to demonstrate how an arbitrary frequency/group delay characteristic may be realised by means of a transformerless, coupled-line network supporting a T. E. M. mode of propagation which exhibits zero insertion loss at all frequencies. Such a network is termed a microwave allpass network. The combination of the constant delay network and the microwave all-pass network obviously enables arbitrary phase and amplitude specifications to be met simultaneously.

Initially, it is shown that a commensurate microwave all-pass network may be represented as a cascade of microwave all-pass C-type and D-type sections within an arbitrary number of unit elements[3]. This enables complete delay characteristics to be approximated by the addition of the delay characteristics of single C-type and D-type all-pass sections; a detailed discussion of this procedure is presented in the text. Furthermore, since any delay characteristic may be realised by a cascade of C-type and D-type all-pass sections, by proving that any all-pass C-type or D-type section may be realised directly, or in cascade with a unit element by means of a transformerless, coupled-line network, the realisation of any arbitrary delay characteristic is ensured within an additive constant.

For physical convenience, occasionally it is desirable to be able to realise microwave all-pass networks directly without reducing them to the cascade of C-type and D-type all-pass sections. Two realisations in this form are presented. The first realisation is in the form of a cascade of two-wire coupled lines, a problem originally considered by Steenaart[4] and a simple synthesis procedure is formulated. This particular class of network is useful when it is required to realise a delay characteristic where the difference between maximum and minimum delays in relatively small, otherwise unrealisable element values may result. The second realisation which is presented enables 'resonant' type of delay characteristics to be realised in a simple manner. This class of networks takes the form of an interdigital line structure where the lines are terminated in open or short circuited stubs, the input and output ports being at either end of one of the lines. A general synthesis procedure is developed based upon the even-mode impedance of the network thus reducing the synthesis problem to the realisation of a single reactance function in a particular form.

Finally, attention is given to the application of microwave all-pass networks to the phase correction of conventional microwave filters and the construction of delay networks with linear delay characteristics. A numerical example is presented where a C-type and a D-type all-pass section are used to correct the phase response of a five element stepped impedance transformer[5], a realisation in the form of a cascade of

three, two-wire, coupled lines being presented. Limitations on this form of realisation are demonstrated by considering the phase correction of the complementary five element low-pass prototype filter[6]. In this case, a realisation in the form of a cascade of two-wire lines is not possible due to resulting negative coupling admittances and a general form of realisation as a physical cascade of a C-type and a D-type all-pass section must be sought.

A first order approximation is given for the design of a delay network with a linear delay characteristic over a narrow band of frequencies where the change in delay over the band is relatively large. This network may normally be realised in the form of the interdigital line network with open and short circuited terminating stubs.

II. DELAY CHARACTERISTICS OF MICROWAVE ALL-PASS NETWORKS

Consider the scattering matrix of a two-port, passive, lossless, reciprocal network defined as:-

$$[S] = \begin{bmatrix} S_{11} & S_{12} \\ S_{12} & S_{22} \end{bmatrix} \tag{1}$$

where, from the unitary condition, at real frequencies

$$[S]\,[\tilde{S}] = [1] \tag{2}$$

$[\tilde{S}]$ being the adjoint matrix of $[S]$.

The network is defined as an all-pass network if,

$$S_{11} = S_{22} = 0 \tag{3}$$

which, from equation (2), results in

$$|S_{12}| = 1 \tag{4}$$

evaluated at real frequencies.

If the network is a commensurate microwave network then, conventionally S_{12} may be expressed as a rational function in $t = \tanh p$ (p normalised), within multipliers $(1 - t^2)^{1/2}$ and is analytic in the domain $\mathrm{Re}\, t > 0$[1]. Thus, from equation (4) for a commensurate microwave all-pass network S_{12} may be written as

$$S_{12}(t) = \left(\frac{1-t}{1+t}\right)^{\frac{n}{2}} \left(\frac{H(-t)}{H(t)}\right) \tag{5}$$

where $H(t)$ may be identified as a strict Hurwitz polynomial in t, and n is the effective number of unit elements in the network.

From equation (5), at real frequency, the phase angle ψ_{12} of $S_{12}(t)$ is given by

$$\psi_{12} = n\omega + 2\tan^{-1}\left[\frac{H(t) - H(-t)}{j[H(t) + H(-t)]}\right] \tag{6}$$

with

$$p = j\omega \text{ and } t = j \tan \omega$$

The normalised group delay Tg of the network is then given by

$$T_g = \frac{d\psi_{12}}{d\omega}$$

$$= n + (1+\tan^2\omega)\left[\frac{H'(j\tan\omega)}{H(j\tan\omega)} + \frac{H'(-j\tan\omega)}{H(-j\tan\omega)}\right]$$

where prime denotes differentation with respect to t, or, within an arbitrary additive constant,

$$T_g(t) = (1-t^2)\left[\frac{H'(t)}{H(t)} + \frac{H'(-t)}{H(-t)}\right] \tag{7}$$

where t is expressed as $t = \tanh p$, and $H'(-t)$ indicates the differentiation of H(t) with respect to t and then the replacement of t by -t.

Since H(t) is a strict Hurwitz polynomial, then,

$$H(t) = \prod_{i=1}^{i=k} (t + \lambda_i) \prod_{i=1}^{i=m} (t^2 + 2\sigma_i + |t_i|^2) \tag{8}$$

where

$\lambda_i, \sigma_i > 0$

$t_i = \sigma_i + j\omega_i$

k is the number of real zeros,

and m is the number of pairs of complex zeros.

From equation (7) Tg(t) may now be expanded in partial fraction form to yield,

$$Tg(t) = (1-t^2)\left[\sum_{i=1}^{i=k}\left[\frac{1}{\lambda_i + t} + \frac{1}{\lambda_i - t}\right] + \sum_{i=1}^{i=m}\left[\frac{1}{t_i + t} + \frac{1}{t_i^* + t} + \frac{1}{t_i - t} + \frac{1}{t_i^* - t}\right]\right] \tag{9}$$

which is evidently the delay of a cascade of k C-type and m D-type microwave all-pass sections. Hence, the overall frequency/group delay characteristics of this class of networks may be determined by addition of the delays of single C-type and D type all-pass sections.

For the all-pass C-type section,

$$S_{12}(t) = \frac{\sigma_o - t}{\sigma_o + t} \tag{10}$$

where σ_o is the real axis transmission zero of the section.

From equation (9), the group delay at real frequencies is,

$$T_g = \frac{2\sigma_o}{(\sin^2\omega)(1 - \sigma_o^2) + \sigma_o^2} \tag{11}$$

At

$$\omega = 0, \quad T_g = \frac{2}{\sigma_o}$$

and at (12)

$$\omega = \frac{\pi}{2}, \quad T_g = 2\sigma_o$$

Thus, the delay either increases or decreases with increasing frequency (up to a quarter wavelength frequency) depending upon whether $\sigma_o > 1$ or $\sigma_o < 1$ respectively. A set of curves showing the delay characteristics as a function of $\sin\omega$ is shown in Fig. 1. The curves are only shown for the case $\sigma_o < 1$ since, from equation (11), if $\sigma_1 = \frac{1}{\sigma_o}$, then,

$$T_g = \frac{2\sigma_o}{(\cos^2\omega)(1 - \sigma_o^2) + \sigma_o^2} \tag{13}$$

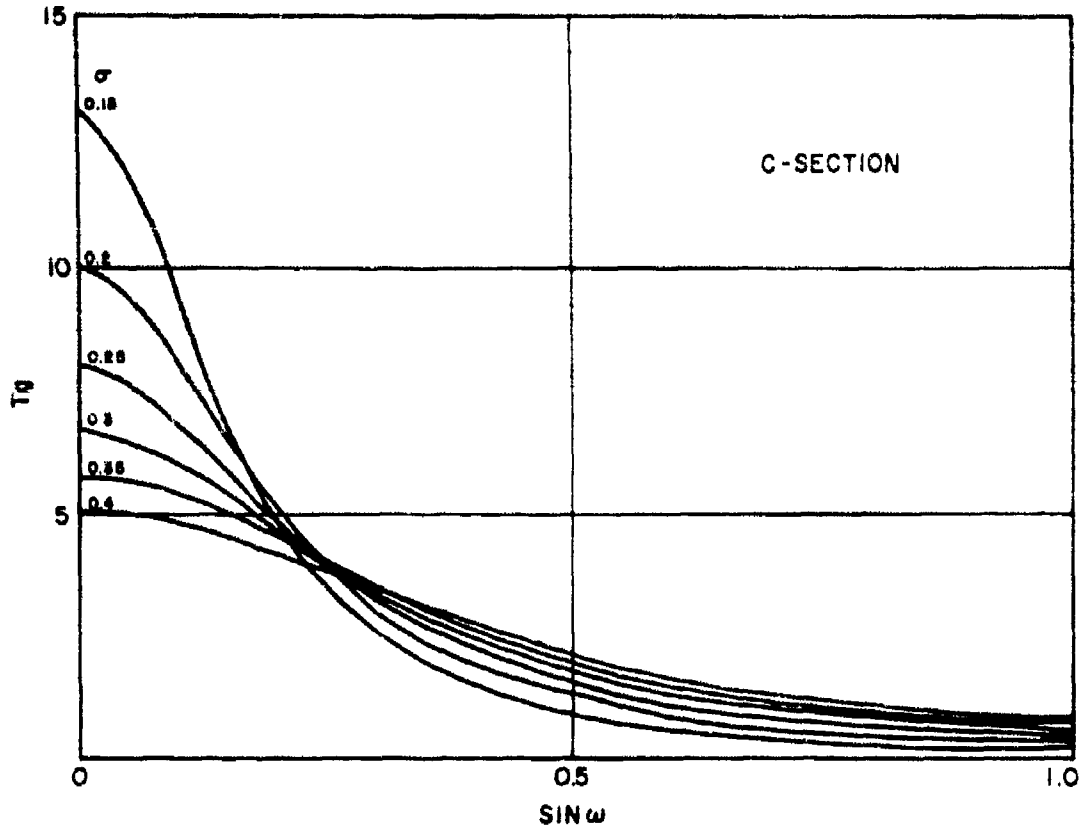

A

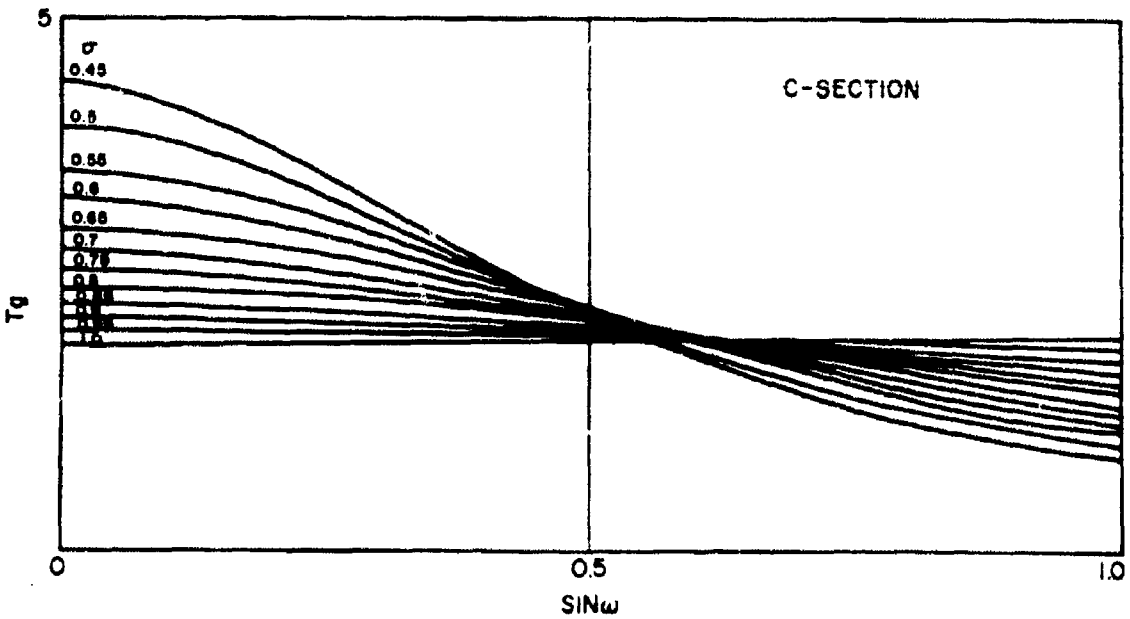

B

Figure 1. Delay Characteristics of the Microwave C-Type Section

which is of the same form as equation (11) with $\sin\omega$ replaced by $\cos\omega$. Thus, to determine the delay corresponding to the case $\sigma_1 > 1$, it is only necessary to use the curve corresponding to $\sigma_o = \frac{1}{\sigma_1}$ and to consider the horizontal axis to represent $\cos\omega$.

In the case of the microwave all-pass D-type section with a transmission zero at $t_o = \sigma_o + j\omega_o$, from equation (9),

$$T_g = \frac{4\sigma_o\left[(1-|t_o|^2\sin^2\omega + |t_o|^2\right]}{\sin^4\omega(1+2|t_o|^2 + |t_o|^4 - 4\sigma_o^2) - 2\sin^2\omega(|t_o|^2 + |t_o|^4 - 2\sigma_o^2) + |t_o|^4} \quad (14)$$

The d.c. delay is $4\sigma_o/|t_o|^2$ while the delay at a quarter wave length frequency is $4\sigma_o$. The latter is the greater if $|t_o| > 1$ while if $|t_o| < 1$ the d.c. delay is the larger. In order to determine the conditions for the existence of a peak in the delay curve, equation (14) is differentiated and equated to zero to give

$$\tan^2\omega = \frac{|t_o|}{1+3|t_o|^2-4\sigma_o^2}\left[\frac{|t_o|(|t_o|^2-1)}{\pm\left(|t_o|^2(|t_o|^2+(1+3|t_o|^2-4\sigma_o^2)(4\sigma_o^2+3|t_o|^2+|t_o|^4)\right)^{1/2}}\right] \quad (15)$$

and a peak delay exists only if a positive solution to equation (15) is possible. This can occur if

$$|t_o| \leq 1 \quad \sigma_o^2 \leq \frac{|t_o|^4 + 3|t_o|^2}{4}$$

or (16)

$$|t_o| \geq 1 \quad \sigma_o^2 \leq \frac{1+3|t_o|^2}{4}$$

Otherwise a rising or falling characteristic similar to that of the C-type section results.

A set of delay curves for the microwave D-type section is shown in Fig. 2. Curves are only drawn for $|t_o| < 1$ since if the delay corresponding to a singularity $\sigma_1 + j\omega_1$ where $|t_1| > 1$ is required then,

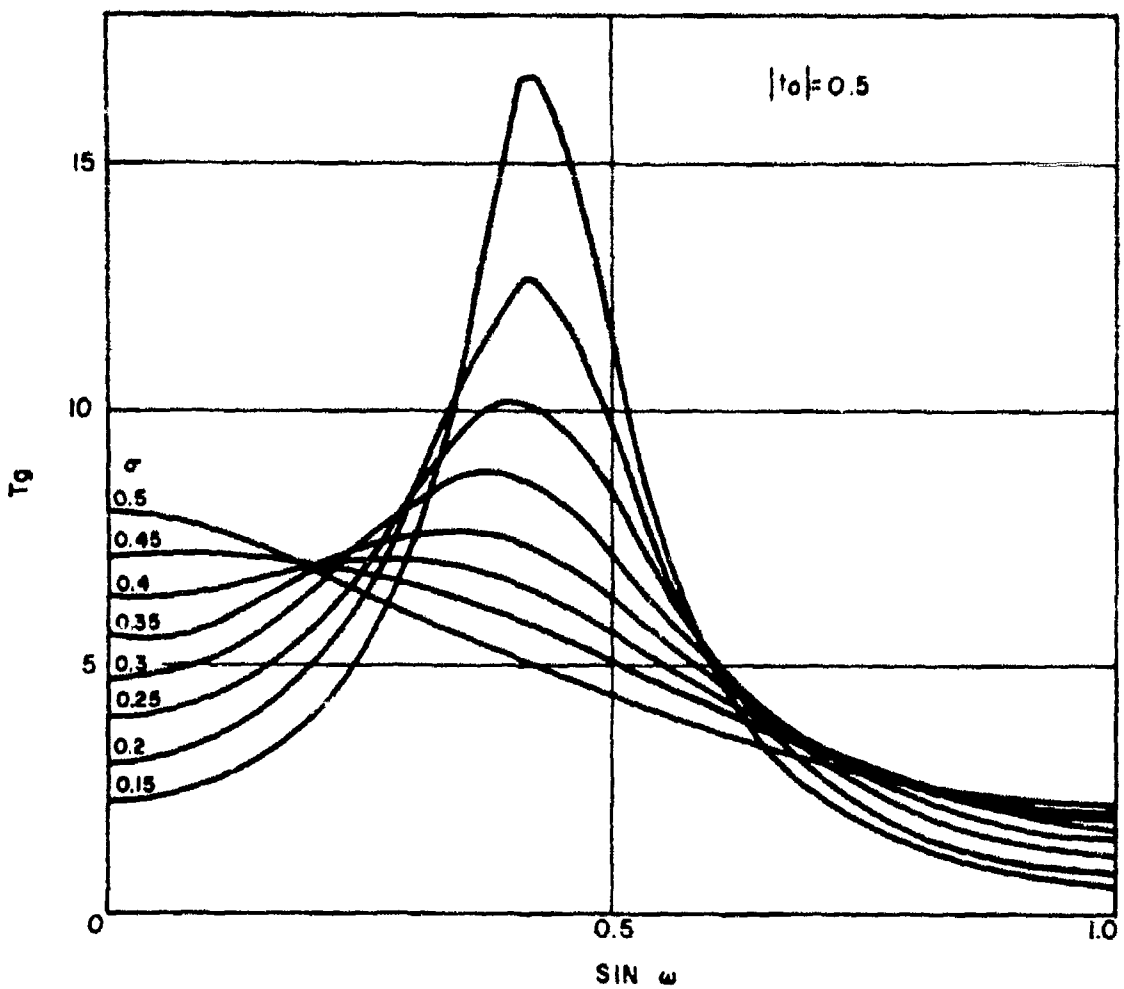

Figure 2a. Delay Characteristics of the Microwave D-Type Section

$$T_g = \frac{4\sigma_1 \left[(1 - |t_1|^2) \sin^2 \omega + |t_1|^2 \right]}{\sin^4 \omega (1 + 2|t_1|^2 + |t_1|^4 - 4\sigma_1^2) - 2 \sin^2 \omega (|t_1|^2 + |t_1|^4 - 2\sigma_1^2) + |t_1|^4}$$

$$= \frac{4\sigma_1 \left[1 - \cos^2 \omega (1 - |t_1|^2) \right]}{\cos^4 \omega (1 + 2|t_1|^2 + |t_1|^4 - 4\sigma_1^2) - 2 \cos^2 \omega (1 + |t_1|^2 - 2\sigma_1^2) + 1} \qquad (17)$$

and if

$$\sigma_o + j\omega_o = \frac{1}{\sigma_1 + j\omega_1}$$

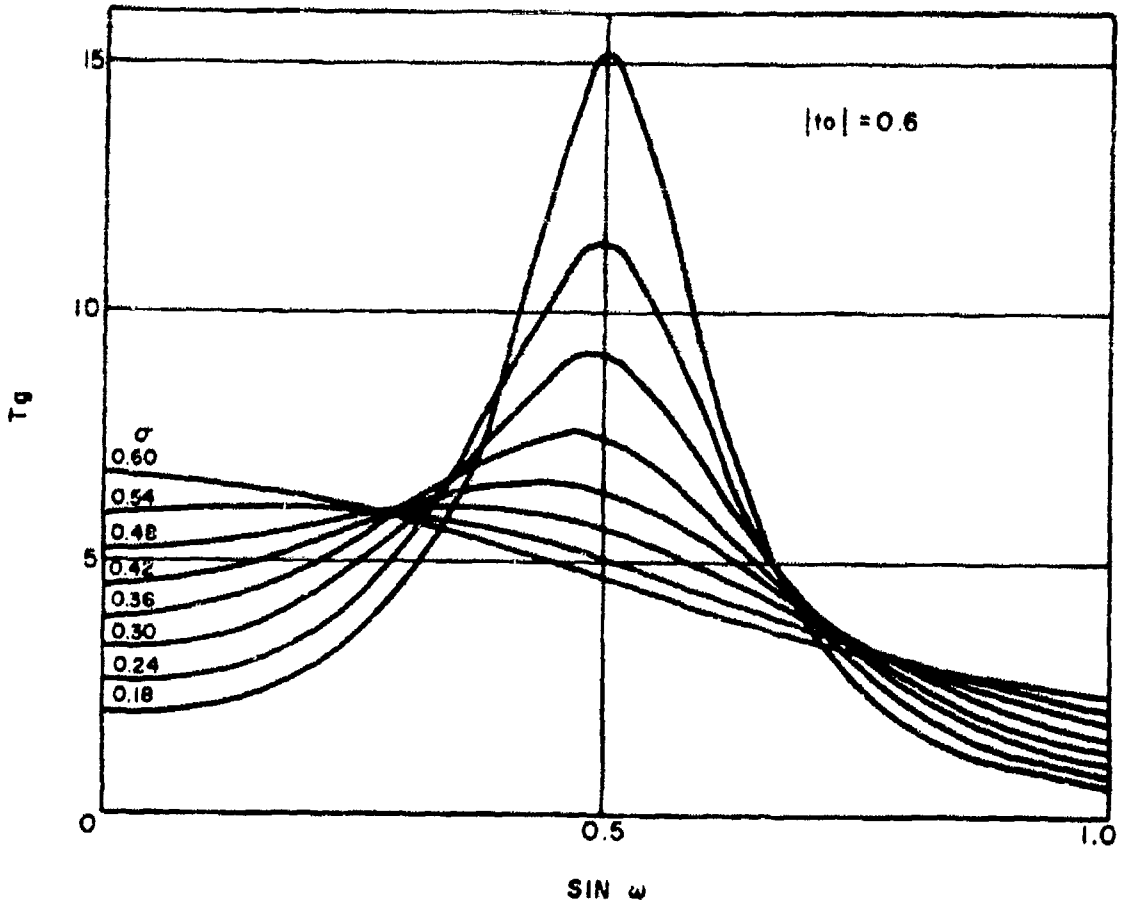

Figure 2b. Delay Characteristics of the Microwave D-Type Section

so that

$$|t_1| = \frac{1}{|t_o|}$$

$$T_g = \frac{4\sigma_o[(1 - |t_o|^2)\cos^2\omega + |t_o|^2]}{\cos^4\omega(1+2|t_o|^2 + |t_o|^4 - 4\sigma_o^2) - 2\cos^2\omega(|t_o|^2 + |t_o|^4 - 2\sigma_o^2) + |t_o|^4} \quad (18)$$

which is in exactly the same form as equation (14) with $\sin\omega$ replaced by $\cos\omega$. Thus, in order to find the delay appropriate to a case where $|t_1| > 1$ it is only necessary to use the curves in Fig. 2 for $|t_o| = \frac{1}{|t_1|}$ and $\sigma_o = \frac{\sigma_1}{|t_1|^2}$.

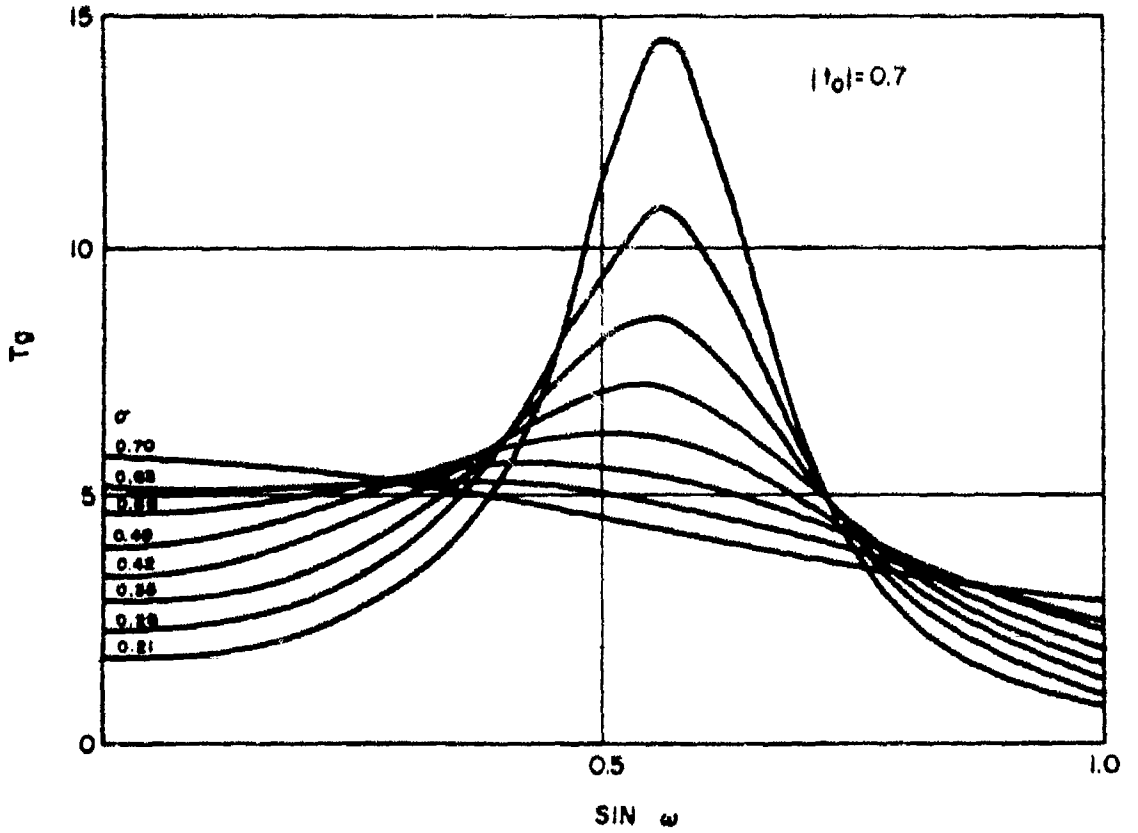

Figure 2c. Delay Characteristics of the Microwave D-Type Section

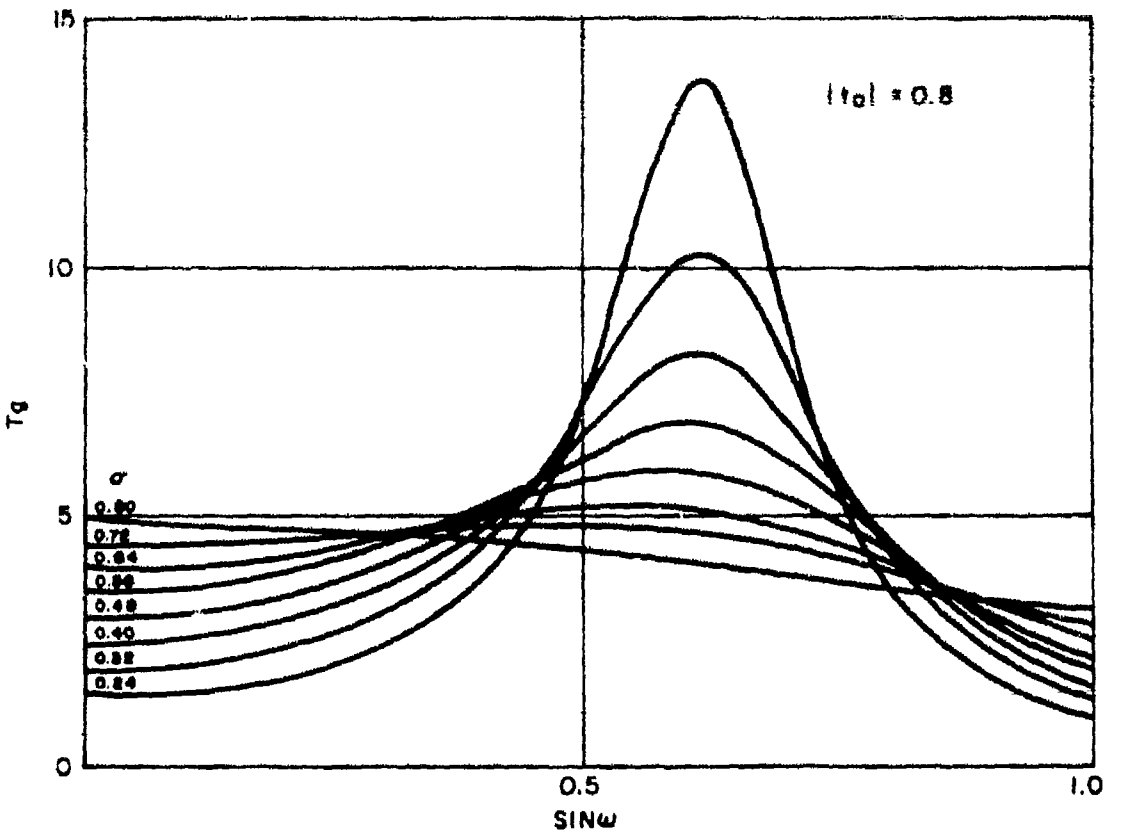

Figure 2d. Delay Characteristics of the Microwave D-Type Section

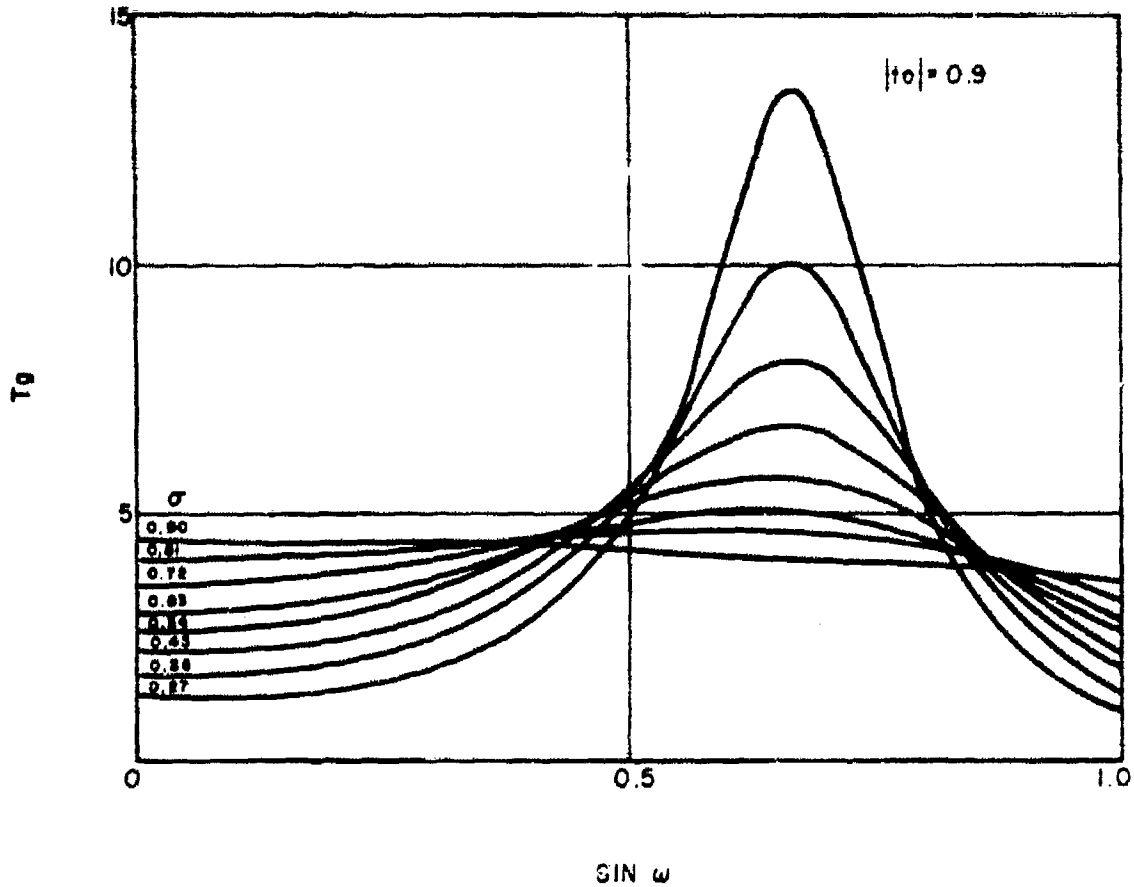

Figure 2e. Delay Characteristics of the Microwave D-Type Section

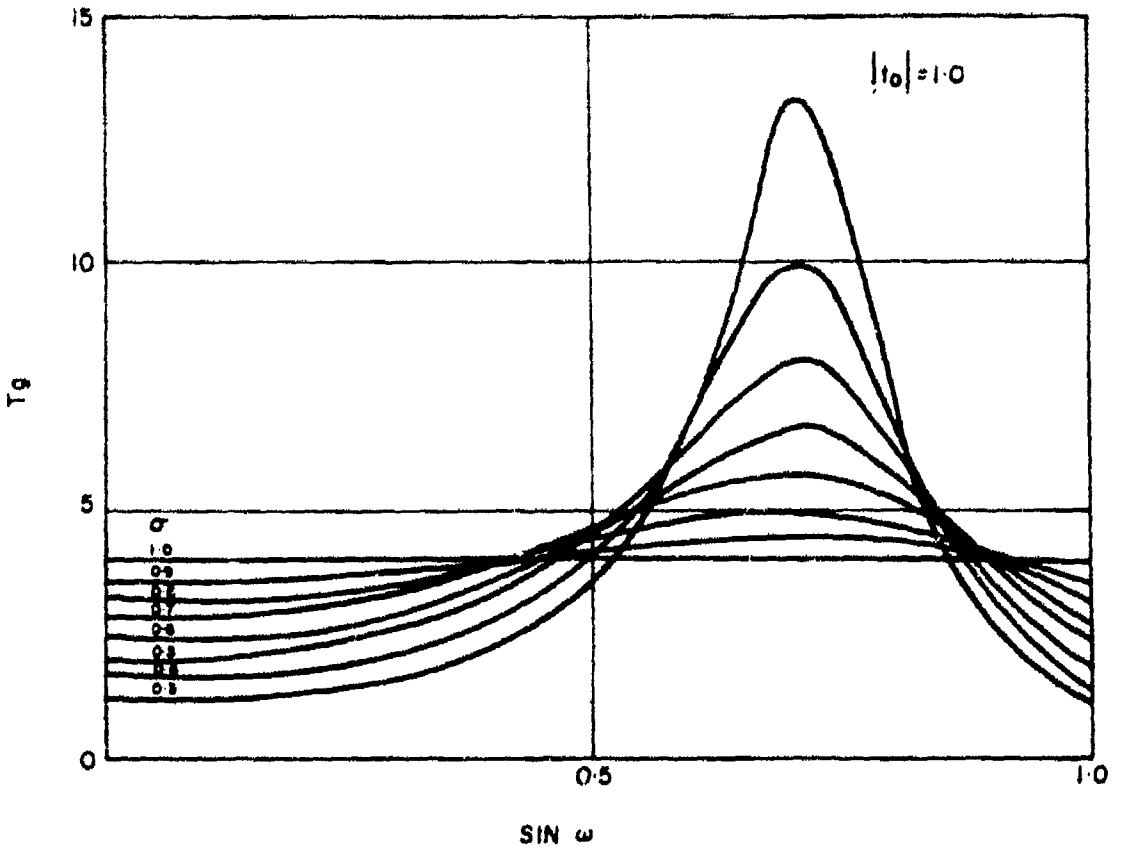

Figure 2f. Delay Characteristics of the Microwave D-Type Section

III. COUPLED-LINE REALISATIONS OF THE MICROWAVE C-TYPE AND D-TYPE ALL-PASS SECTIONS

C-Type Section

A C-type section may be realised directly by the symmetrical two-wire line network[7] shown in Fig. 3. This particular realisation is the first ordered case of a general synthesis procedure[8] which is described in section 3 and therefore here it is sufficient to say that

$$Z_{oe} = \sigma_o \qquad Z_{oo} = \frac{1}{\sigma_o} \tag{19}$$

where Z_{oe} and Z_{oo} are the even and odd mode impedances of the symmetrical two-wire line.

For positive coupling between the lines,

$$Z_{oe} \geq Z_{oo}$$

and thus the realisability condition is

$$\sigma_o \geq 1 \tag{20}$$

In order to realise a C-type section where $\sigma_o < 1$, it is necessary to consider a realisation of the section in cascade with a unit element[1].

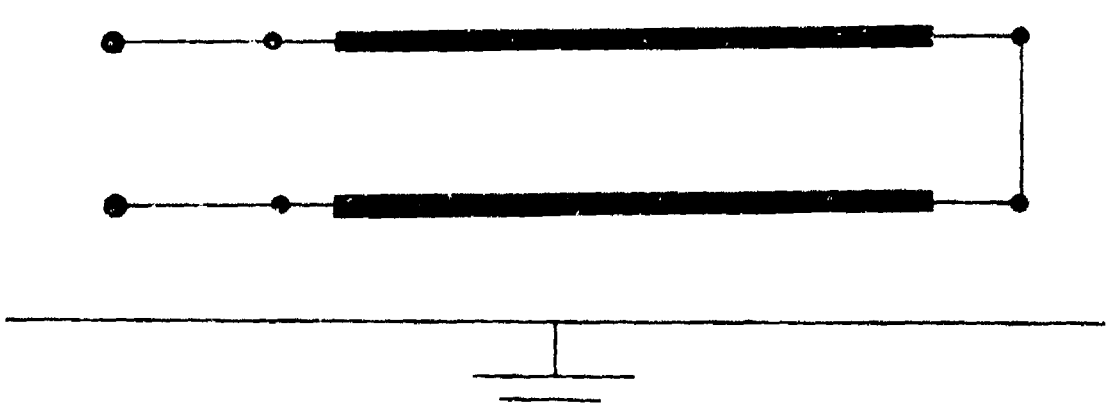

Figure 3. A Symmetrical Two-Wire, Coupled-Line Network Realising the Microwave C-Type Section

C-Type Section and Unit Element

Numerous methods exist for the realisation of a C-type section in cascade with a unit element[4] but most suffer from the realisability condition $\sigma_o \geq 1$. Here, only one realisation is presented which may realise any C-type all-pass section in cascade with a unit element of unity characteristic impedance.

The transfer matrix of the overall section is,

$$\frac{1}{\sqrt{1-t^2}\,(\sigma_o^2 - t^2)} \begin{bmatrix} \sigma_o^2 + t^2\,(2\sigma_o + 1) & t\,[\sigma_o\,(2+\sigma_o) + t^2] \\ t\,[\sigma_o\,(2+\sigma_o) + t^2] & \sigma_o^2 + t^2\,(2\sigma_o + 1) \end{bmatrix} \tag{21}$$

which yields the impedance matrix

$$\frac{1}{t\,[\sigma_o\,(2+\sigma_o) + t^2]} \begin{bmatrix} \sigma_o^2 + t^2\,(2\sigma_o + 1) & \sqrt{1-t^2}\,(\sigma_o^2 - t^2) \\ \sqrt{1-t^2}\,(\sigma_o^2 - t^2) & \sigma_o^2 + t^2\,(2\sigma_o + 1) \end{bmatrix} \tag{22}$$

A unit element of characteristic impedance

$$Z_o = \frac{\sigma_o}{(2 + \sigma_o)}$$

with an impedance matrix,

$$\frac{Z_o}{t} \begin{bmatrix} 1 & \sqrt{1-t^2} \\ \sqrt{1-t^2} & 1 \end{bmatrix} \tag{23}$$

is extracted in series from the all-pass section to leave a network defined by the impedance matrix,

$$\frac{2\,(1 + \sigma_o)\,t}{(2+\sigma_o)\,(\sigma_o\,(2+\sigma_o) + t^2)} \begin{bmatrix} (1 + \sigma_o) & -\sqrt{1-t^2} \\ -\sqrt{1-t^2} & (1 + \sigma_o) \end{bmatrix} \tag{24}$$

The corresponding transfer matrix is:-

$$\frac{-1}{\sqrt{1-t^2}}\begin{bmatrix} 1+\sigma_o & \dfrac{2(1+\sigma_o)\,t}{(2+\sigma_o)} \\ \dfrac{(2+\sigma_o)}{2(1+\sigma_o)}\left[t+\dfrac{\sigma_o\,(2+\sigma_o)}{t}\right] & 1+\sigma_o \end{bmatrix} \tag{25}$$

and remains to be realised by a transformerless coupled-line network.

In order to achieve this, consider the transfer matrix of a symmetrical two-wire line defined as:-

$$\begin{bmatrix} V_1 \\ V_2 \\ I_1 \\ I_2 \end{bmatrix} = \frac{1}{\sqrt{1-t^2}}\begin{bmatrix} 1 & 0 & \xi_{11}\,t & \xi_{12}\,t \\ 0 & 1 & \xi_{12}\,t & \xi_{11}\,t \\ \eta_{11}\,t & -\eta_{12}\,t & 1 & 0 \\ -\eta_{12}\,t & \eta_{11}\,t & 0 & 1 \end{bmatrix}\begin{bmatrix} V_{1\ell} \\ V_{2\ell} \\ I_{1\ell} \\ I_{2\ell} \end{bmatrix} \tag{26}$$

where the directions of the voltages and currents are shown in Fig. 4,

$$[\eta'] = \begin{bmatrix} \eta_{11} & -\eta_{12} \\ -\eta_{12} & \eta_{11} \end{bmatrix} \tag{27}$$

is the characteristic admitttance matrix of the two-wire line and,

$$[\eta]\,[\xi] = [1] \tag{28}$$

If the terminal conditions $V_2 = V_{1\ell} = 0$ are imposed on this network then, the transfer matrix of the remaining two-port is:-

$$\frac{-1}{\sqrt{1-t^2}} \begin{bmatrix} \dfrac{\eta_{11}}{\eta_{12}} & \dfrac{t}{\eta_{12}} \\ \eta_{12}\, t + \dfrac{1}{\xi_{12}\, t} & \dfrac{\eta_{11}}{\eta_{12}} \end{bmatrix} \tag{29}$$

Comparing this matrix with the matrix (25) results in,

$$\eta_{11} = \frac{(2+\sigma_o)}{2}$$

$$\eta_{12} = \frac{(2+\sigma_o)}{2(1+\sigma_o)} \tag{30}$$

or

$$Z_{oe} = \xi_{11} + \xi_{12} = \frac{2(1+\sigma_o)}{\sigma_o\,(2+\sigma_o)}$$

$$Z_{oo} = \xi_{11} - \xi_{12} = \frac{2(1+\sigma_o)}{(2+\sigma_o)^2} \tag{31}$$

which is realisable with positive values of admittance for all values of σ_o.

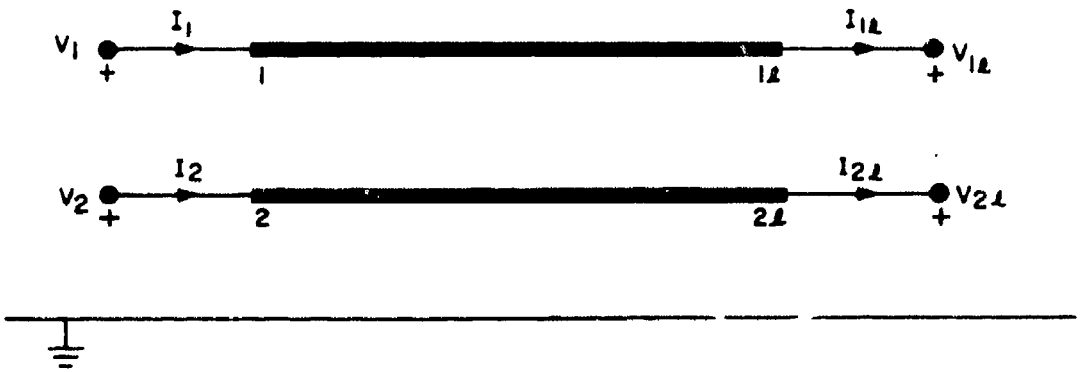

Figure 4. A General, Symmetrical, Two-Wire Coupled Line

The final network is illustrated in Fig. 5. Thus it has been shown that all microwave C-type sections is cascade with a unit element of unity characteristic impedance may always be realised by a transformerless coupled-line network.

D-Type Section

The D-type all-pass section may be realised by means of a cascade of two, symmetrical, two-wire lines as shown in Fig. 6. Again, since a general synthesis procedure for a realisation in this form is presented in the following section, only the pertinent element values will be given here.

If Z_{oe1}, Z_{oo1} and Z_{oe2}, Z_{oo2} are the even and odd mode impedances of the first and second two-wire lines then,

$$Z_{oe1} = \frac{1 + |t_o|^2}{2\sigma_o} \tag{32}$$

$$Z_{oe2} = |t_o|^2 Z_{oe1}$$

and

$$Z_{oe1} Z_{oo1} = Z_{oe2} Z_{oo2} = 1 \tag{33}$$

Realisability requires that

(a) $Z_{oe1} \geq 1$

or

$$1 - 2\sigma_o + |t_o|^2 \geq 0$$

which is always true, and,

(b) $Z_{oe2} \geq 1$

or

$$|t_o|^2 \left[1 + |t_o|^2\right] \geq 2\sigma_o \tag{34}$$

which is the realisability condition.

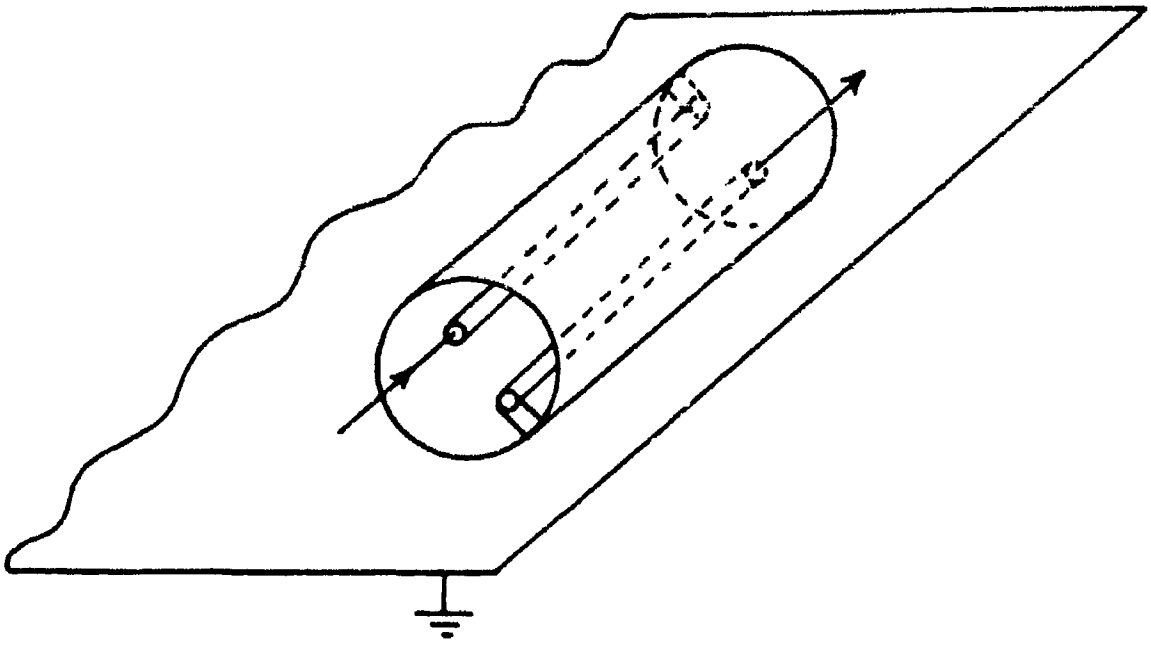

Figure 5. A Realisation of the Microwave C-Type Section in Cascade With A Unit Element

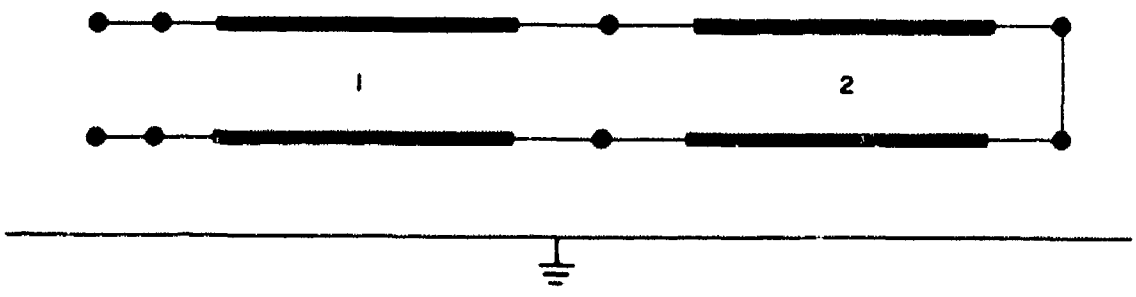

Figure 6. A Cascade of Two, Two-Wire Lines Realising the Microwave D-Type Section

The region in which transmission zeros may not be realised by this technique is shown in Fig. 7.

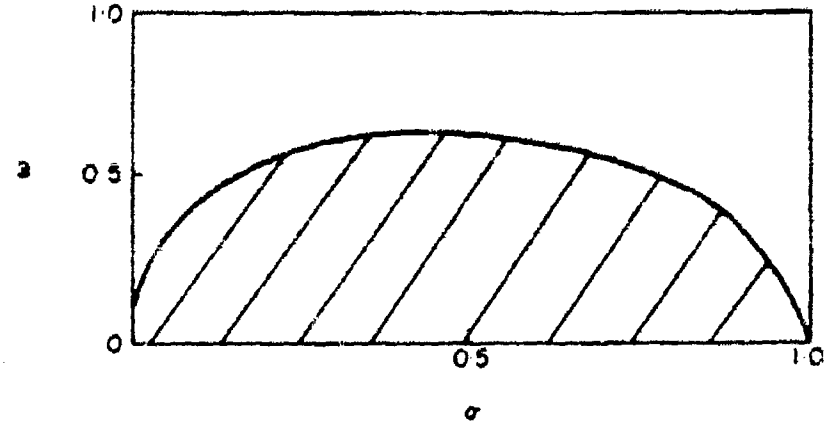

Figure 7. Realisability Contour for the Realisation of the Microwave D-type Section

D-Type Section and Unit Element

The transfer matrix of an all-pass D-type section in cascade with a unit element of unity characteristic impedance is

$$\frac{1}{\sqrt{1-t^2}\,(|t_o|^4 + 2(\omega_o^2 - \sigma_o^2)t^2 + |t_o|^4)} \begin{bmatrix} A & B \\ B & A \end{bmatrix} \tag{35}$$

where

$$A = |t_o|^4 + 2t^2\left[\omega_o^2 + 3\sigma_o^2 + 2\sigma_o|t_o|^2\right] + t^4(1 + 4\sigma_o)$$

$$B = t\left[|t_o|^2(4\sigma_o + |t_o|^2) + 2t^2(\omega_o^2 + 3\sigma_o^2 + 2\sigma_o) + t^4\right]$$

and

$$t_o = \sigma_o + j\omega_o$$

In the synthesis procedure which follows an admittance split is employed which necessitates the use of the admittance matrix[1]. For the section under consideration, the admittance matrix is of the form,

$$\begin{bmatrix} y_{11} & y_{12} \\ y_{12} & y_{11} \end{bmatrix}$$

where

$$y_{11} = \frac{|t_o|^4 + 2t^2(\omega_o^2 + 3\sigma_o^2 + 2\sigma_o|t_o|^2) + t^4(1 + 4\sigma_o)}{t\left[|t_o|^2(4\sigma_o + |t_o|^2) + 2t^2(\omega_o^2 + 3\sigma_o^2 + 2\sigma_o) + t^4\right]}$$

$$y_{12} = \frac{-(1-t^2)^{1/2}\left[|t_o|^4 + 2(\omega_o^2 - \sigma_o^2)t^2 + t^4\right]}{t\left[|t_o|^2(4\sigma_o + |t_o|^2) + 2t^2(\omega_o^2 + 3\sigma_o^2 + 2\sigma_o) + t^4\right]} \tag{36}$$

Expanding y_{11} and y_{12} in partial fraction form results in:-

$$y_{11} = \frac{k_o}{t} + \frac{k_{11}A_t}{t^2 + \omega 2^2} + \frac{k_{11}B_t}{t^2 + \omega 1^2}$$

$$y_{12} = -(1-t^2)^{1/2}\left[\frac{k_o}{t} + \frac{k_{12}A_t}{t^2 + \omega 2^2} - \frac{k_{12}B_t}{t^2 + \omega_1^2}\right] \tag{37}$$

where

$$\omega_2^2 = 2\sigma_o(1 + \sigma_o) + |t_o|^2 + 2\sigma_o\sqrt{(1 + \sigma_o)^2 + |t_o|^2}$$

$$\omega_1^2 = 2\sigma_o(1 + \sigma_o) + |t_o|^2 - 2\sigma_o\sqrt{(1 + \sigma_o)^2 + |t_o|^2} \tag{38}$$

$$k_o = \frac{|t_o|^2}{4\sigma_o + |t_o|^2}$$

$$k_{12}^{A} = \frac{|t_o|^4 - 2(\omega_o^2 - \sigma_o^2)\omega_2^2 + \omega_2^4}{\omega_2^2(\omega_2^2 - \omega_1^2)} > 0$$

$$k_{12}^{B} = \frac{|t_o|^4 - 2(\omega_o^2 - \sigma_o^2)\omega_1^2 + \omega_1^4}{\omega_1^2(\omega_2^2 - \omega_1^2)} > 0 \tag{38}$$

and

$$k_{11}^{A} = k_{12}^{A}(1 + \omega_2^2)^{1/2}$$

$$k_{11}^{B} = k_{12}^{B}(1 + \omega_1^2)^{1/2}$$

The network may now be decomposed into the parallel connection of two networks N_A and N_B defined by,

$$\begin{bmatrix} y_{11} & y_{12} \\ y_{12} & y_{11} \end{bmatrix} = \begin{bmatrix} y_{11}^{A} & y_{12}^{A} \\ y_{12}^{A} & y_{11}^{A} \end{bmatrix} + \begin{bmatrix} y_{11}^{B} & y_{12}^{B} \\ y_{12}^{B} & y_{11}^{B} \end{bmatrix} \tag{39}$$

Assuming that x is real and $0 \le x \le 1$, then,

$$y_{11}^{A} = \frac{k_o(1-x)}{t} + \frac{k_{11}^{A}t}{t^2 + \omega_2^2}$$

$$y_{12}^{A} = -(1-t^2)^{1/2}\left[\frac{k_o(1-x)}{t} + \frac{k_{12}^{A}t}{t^2 + \omega_2^2}\right] \tag{40}$$

and

$$y_{11}^{B} = \frac{k_o x}{t} + \frac{k_{11}^{B}t}{t^2 + \omega_1^2}$$

$$y_{12}^{B} = -(1-t^2)^{1/2}\left[\frac{k_o x}{t} - \frac{k_{12}^{B}t}{t^2 + \omega_1^2}\right] \tag{41}$$

The synthesis of the networks N_A and N_B will now be considered.

Network N_A

The transfer matrix of the network N_A defined by equations (40) is,

$$\frac{1}{(1-t^2)^{1/2}\left[\omega_2^2 k_o (1-x) + t^2 (k_{12}^A + k_o (1-x)\right]} \begin{bmatrix} A & B \\ C & A \end{bmatrix} \tag{42}$$

where

$$B = t(t^2 + \omega_2^2)$$

$$A = \omega_2^2 k_o (1-x) + t^2 (k_{11}^A + k_o (1-x))$$

$$C = t \left[k_o (1-x) \left[\omega_2^2 k_o (1-x) + 2 (k_{11}^A - k_{12}^A)\right] + t^2 \left[k_{12}^A + k_o (1-x)\right]^2\right]$$

The impedance parameters z_{11} and z_{12} may now be constructed and are given by

$$z_{11} = \frac{\omega_2^2 k_o (1-x) + t^2 (k_{11}^A + k_o (1-x))}{t \left[k_o (1-x) \left[\omega_2^2 k_o (1-x) + 2 (k_{11}^A - k_{12}^A)\right] + t^2 (k_{12}^A + k_o (1-x))^2\right]} \tag{43}$$

and

$$z_{12} = \frac{(1-t^2)^{1/2} \left[\omega_2^2 k_o (1-x) + t^2 (k_{12}^A + k_o (1-x))\right]}{t \left[k_o (1-x) \left[\omega_2^2 k_o (1-x) + 2 (k_{11}^A - k_{12}^A)\right] + t^2 (k_{12}^A + k_o (1-x))^2\right]}$$

A unit element of characteristic impedance

$$Z_1 = \frac{1}{k_{12}^A + k_o (1-x)} \tag{44}$$

is now extracted in series from the network to leave,

$$z_{11}' = z_{11} - \frac{Z_1}{t}$$

$$= \frac{k_o (1-x) \left[\omega_2^2 k_{12}^A - 2 (k_{11}^A - k_{12}^A)\right] + t^2 (k_{12}^A + k_o (1-x))(k_{11}^A - k_{12}^A)}{\left[k_{12}^A + k_o (1-x)\right] t \left[k_o (1-x) \left[\omega_2^2 k_o (1-x) + 2(k_{11}^A - k_{12}^A)\right] + t^2 \left[k_{12}^A + k_o (1-x)\right]^2\right]} \tag{45}$$

and

$$z_{12}' = z_{12} - \frac{(1-t^2)^{1/2} Z_1}{t}$$

$$= \frac{(1-t^2)^{1/2} k_o (1-x) \left[\omega_2^2 k_{12}^A - 2 (k_{11}^A - k_{12}^A)\right]}{\left[k_{12}^A + k_o (1-x)\right] t \left[k_o (1-x) [\omega_2^2 k_o (1-x) + 2 (k_{11}^A - k_{12}^A)] + t^2 [k_{12}^A + k_o (1-x)]^2\right]} \tag{46}$$

The corresponding admittance parameters of this symmetrical network are :-

$$y_{11} = \frac{\left[k_{12}^A + k_o (1-x)\right] \left[k_o (1-x) [\omega_2^2 k_{12}^A - 2 (k_{11}^A - k_{12}^A)] + t^2 + t^2 (k_{12}^A + k_o (1-x)) (k_{11}^A - k_{12}^A)\right]}{(k_{11}^A - k_{12}^A)^2 t} \tag{47}$$

and

$$y_{12} = \frac{-(1-t^2)^{1/2} \left[k_{12}^A + k_o (1-x)\right] k_o (1-x) \left[\omega_2^2 k_{12}^A - 2 (k_{11}^A - k_{12}^A)\right]}{(k_{11}^A - k_{12}^A)^2 t}$$

Two open circuited shunt stubs are extracted, one from each end of the network, of characteristic impedance

$$Z_2 = \frac{(k_{11}^A - k_{12}^A)}{(k_{12}^A + k_o (1-x))^2} \tag{48}$$

to leave admittance parameters which are realisable by a unit element of characteristic impedance,

$$Z_3 = \frac{(k_{11}^A - k_{12}^A)^2}{\left[k_{12}^A + k_o (1-x)\right] k_o (1-x) \left[\omega_2^2 k_{12}^A - 2 (k_{11}^A - k_{12}^A)\right]} \tag{49}$$

Using the relationships given in equations (38), the element values in the network reduce to,

$$Z_1 = \frac{1}{k_{12}{}^A + k_o\,(1-x)} > 0$$

$$Z_2 = \frac{k_{12}{}^A\,(\sqrt{1+\omega_2{}^2}-1)}{\left[k_{12}{}^A + k_o\,(1-x)\right]} > 0 \qquad (50)$$

$$Z_3 = \frac{k_{12}{}^A}{k_o\,(1-x)\,\left[k_{12}{}^A + k_o\,(1-x)\right]} > 0$$

The realisation of the network N_A as described is shown in Fig. 8. A more convenient practical realisation will be discussed during the process of connecting the network N_A in parallel with the network N_B.

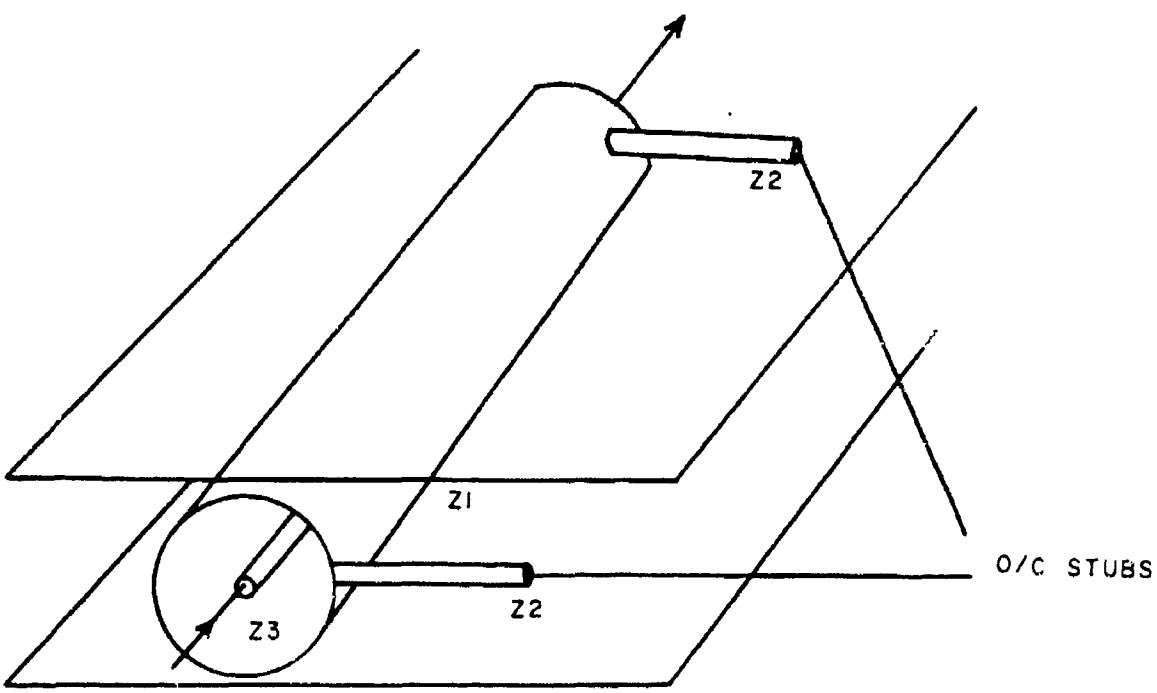

Figure 8. The Physical Realisation of the Network N_A

Network N_B

The transfer matrix of the network N_B defined by equations (41) is

$$\frac{1}{\sqrt{1-t^2}\left[\omega_1^2 k_o x + t^2 (k_o x - k_{12}^B)\right]} \begin{bmatrix} A & B \\ C & A \end{bmatrix} \tag{51}$$

where

$$A = \omega_1^2 k_c x + t^2 (k_o x + k_{11}^B)$$

$$B = t(t^2 + \omega_1^2)$$

$$C = t\left[k_o x\,[\omega_1^2 k_o x + 2(k_{11}^B + k_{12}^B)] + t^2 (k_o x - k_{12}^B)^2\right]$$

The corresponding impedance parameters are:-

$$z_{11} = \frac{\omega_1^2 k_o x + t^2 (k_o x + k_{11}^B)}{t\left[k_o x\,[\omega_1^2 k_o x + 2(k_{11}^B + k_{12}^B)] + t^2 (k_o x - k_{12}^B)^2\right]} \tag{52}$$

and

$$z_{12} = \frac{(1-t^2)^{1/2}\left[\omega_1^2 k_o x + t^2 (k_o x - k_{12}^B)\right]}{t\left[k_o x\,[\omega_1^2 k_o x + 2(k_{11}^B + k_{12}^B)] + t^2 (k_o x - k_{12}^B)^2\right]}$$

Two synthesis procedures are presented corresponding to the cases of $k_o x - k_{12}^B$ being positive or negative. In both cases a unit element of characteristic impedance

$$Z_1 = \frac{\omega_1^2}{\omega_1^2 k_o x + 2(k_{11}^B + k_{12}^B)} \tag{53}$$

is extracted in series with the network to leave a network with the impedance parameters,

$$z'_{11} = \frac{t\left[\omega_1^2\,[(k_{11}^B + 2k_{12}^B)k_o x - k_{12}^{B^2}] + 2(k_{11}^B + k_{12}^B)(k_o x + k_{11}^B)\right]}{\left[\omega_1^2 k_o x + 2(k_{11}^B + k_{12}^B)\right]\left[k_o x\,[\omega_1^2 k_o x + 2(k_{11}^B + k_{12}^B)] + t^2 (k_o x - k_{12}^B)^2\right]} \tag{54}$$

and

$$z'_{11} = \frac{\left(1-t^2\right)^{\frac{1}{2}} t\left(k_o x - k_{12} B\right) \left[\omega_1^2 k_{12} B + 2\left(k_{11} B + k_{12} B\right)\right]}{\left[\omega_1^2 k_o x + 2\left(k_{11} B + k_{11} B\right)\right]\left[k_o x\left[\omega_1^2 k_o x + 2\left(k_{11} B + k_{12} B\right)\right] + t^2\left(k_o x - k_{12} B\right)^2\right]}$$

Converting to the admittance parameters yields

$$y'_{11} = \frac{\left[\omega_1^2 k_o x + 2\left(k_{11} B + k_{12} B\right)\right]\left[\omega_1^2 \left[(k_{11} B + 2k_{12} B) k_o x - k_{12} B^2\right] + 2(k_{11} B + k_{12} B)(k_o x + k_{11} B)\right]}{t\left[\omega_1^2 k_{12} B + 2(k_{11} B + k_{12} B)\right]^2} \tag{55}$$

$$y'_{12} = \frac{-(1-t^2)^{\frac{1}{2}}\left[k_o x - k_{12} B\right]\left[\omega_1^2 k_o x + 2(k_{11} B + k_{12} B)\right]}{t\left[\omega_1^2 k_{12} B + 2(k_{11} B + k_{12} B)\right]}$$

If $(k_o x - k_{12} B) \geqslant 0$ then, two short circuit shunt stubs of characteristic impedance,

$$Z_2 = \frac{\left[\omega_1^2 k_{12} B + 2(k_{11} B + k_{12} B)\right]^2}{\left[k_{11} B + k_{12} B\right]\left[\omega_1^2 k_o x + 2(k_{11} B + k_{12} B)\right]^2} \tag{56}$$

are extracted one from each end of the network, to leave a unit element of characteristic impedance

$$Z_3 = \frac{\left[\omega_1^2 k_{12} B + 2(k_{11} B + k_{12} B)\right]}{\left[k_o x - k_{12} B\right]\left[\omega_1^2 k_o x + 2(k_{11} B + k_{12} B)\right]} \tag{57}$$

thus forming the network N_{B1} as shown in Fig. 9. Using the equations (38) the element values of the network N_{B1} reduce to,

$$Z_1 = \frac{\omega_1^2}{k_o x + 2 k_{12} B\left(\sqrt{1 + \omega_1^2} + 1\right)} > 0$$

$$Z_2 = \frac{k_{12} B (1 + \sqrt{1 + \omega_1^2})^3}{\left[\omega_1^2 k_o x + 2 k_{12} B (1 + \sqrt{1 + \omega_1^2})\right]^2} > 0 \tag{58}$$

$$Z_3 = \frac{k_{12} B (1 + \sqrt{1 + \omega_1^2})^2}{\left[k_o x - k_{12} B\right]\left[\omega_1^2 k_o x + 2 k_{12} B (1 + \sqrt{1 + \omega_1^2})\right]} > 0$$

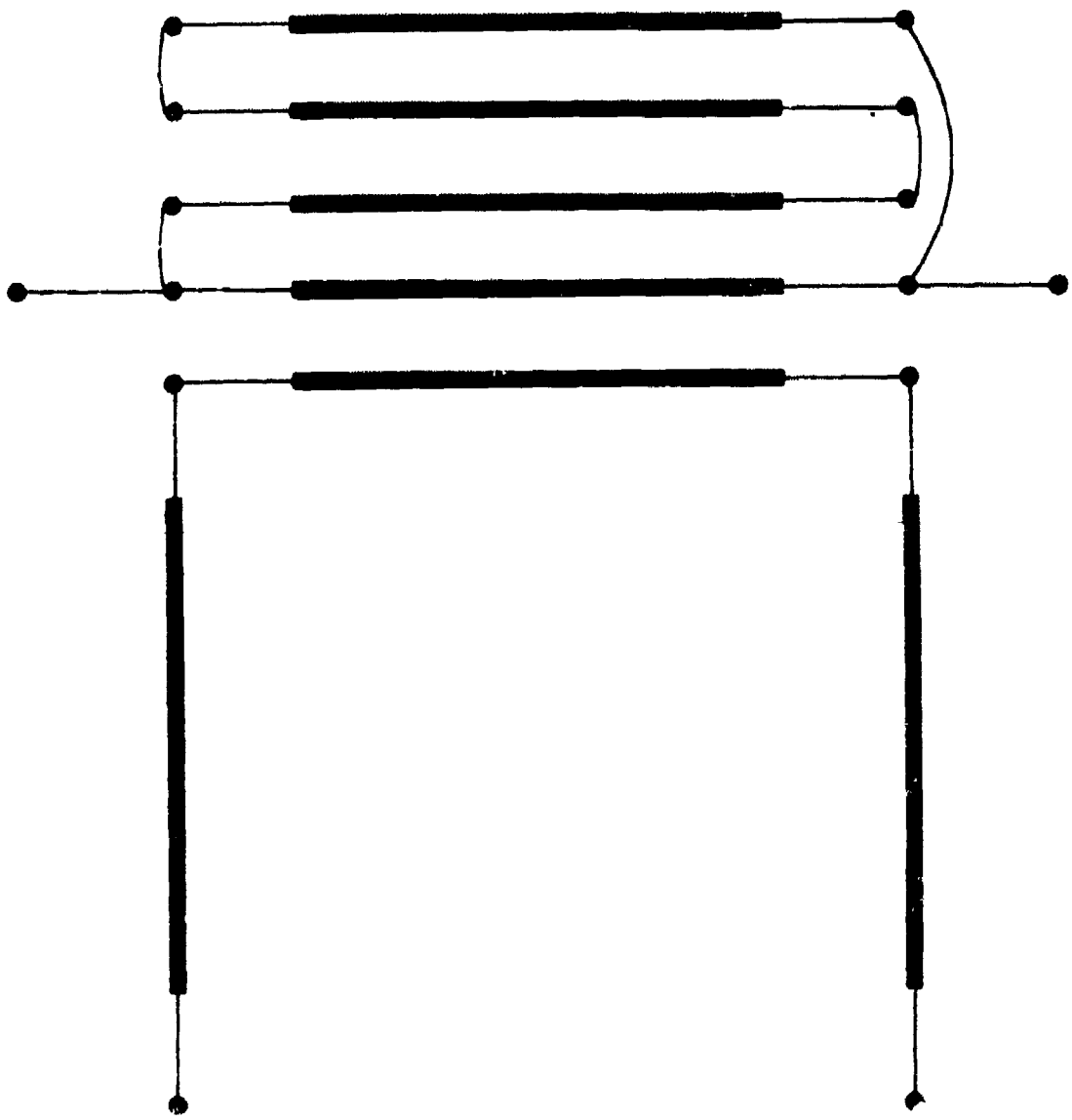

Figure 9. The Parallel Connection of the Networks N_A and N_{B2}

For the case where $(k_o x - k_{12}^{B}) < 0$, the two-wire line network described by the matrix (29) is employed. In this case, by comparing equations (55) with the matrix (29),

$$\eta_{12} = \frac{\left[k_{12}^{B} - k_o x\right]\left[\omega_1^2 k_o x + 2\, k_{12}^{B}(1 + \sqrt{1 + \omega_1^2})\right]}{k_{12}^{B}(1 + \sqrt{1 + \omega_1^2})^2}$$

$$\eta_{11} - \eta_{12} = \frac{\left[\omega_1^2 k_o x + 2\, k_{12}^{B}(1 + \sqrt{1 + \omega_1^2})\right]^2}{k_{12}^{B}(1 + \sqrt{1 + \omega_1^2})^3} \tag{59}$$

leading to,

$$Z_{oo} = \frac{k_{12}^{B}(1 + \sqrt{1 + \omega_1^2})^3}{\left[\omega_1^2 k_o x + 2\, k_{12}^{B}(1 + \sqrt{1 + \omega_1^2})\right]^2}$$

and (60)

$$Z_{oe} = \frac{k_{12}^{B}(1 + \sqrt{1 + \omega_1^2})}{k_o x\left[\omega_1^2 k_o + 2\, k_{12}^{B}(1 + \sqrt{1 + \omega_1^2})\right]}$$

resulting in a network N_{B2} of the same form as that shown in Fig. 5.

This two-wire line network is realisable under the condition $(k_o x - k_{12}^{B}) < 0$, since

$Z_{oe}, Z_{oo} > 0$

$$Z_{oe} - Z_{oo} = \frac{2\, k_{12}^{B}(k_{12}^{B} - k_o x)\,(1 + \sqrt{1 + \omega_1^2})^2}{k_o x\left[\omega_1^2 k_o + 2\, k_{12}^{B}(1 + \sqrt{1 + \omega_1^2})\right]^2} \tag{61}$$

It has been shown that networks N_A and N_B may always be realised, the network N_B being either in the form of N_{B1} or N_{B2}, and therefore any D-type all pass section in

cascade with a unit element of unity characteristic impedance may always be realised using the parallel decomposition technique described by means of transformerless coupled line networks.

The parallel connection of the networks N_A and N_{B2} produces the network shown in Fig. 9 and is a five-wire coupled line structure with two-stubs. The parallel connection of the networks N_A and N_{B1} however degenerates into a three-wire interdigital line section with four stubs as shown in Fig. 10.

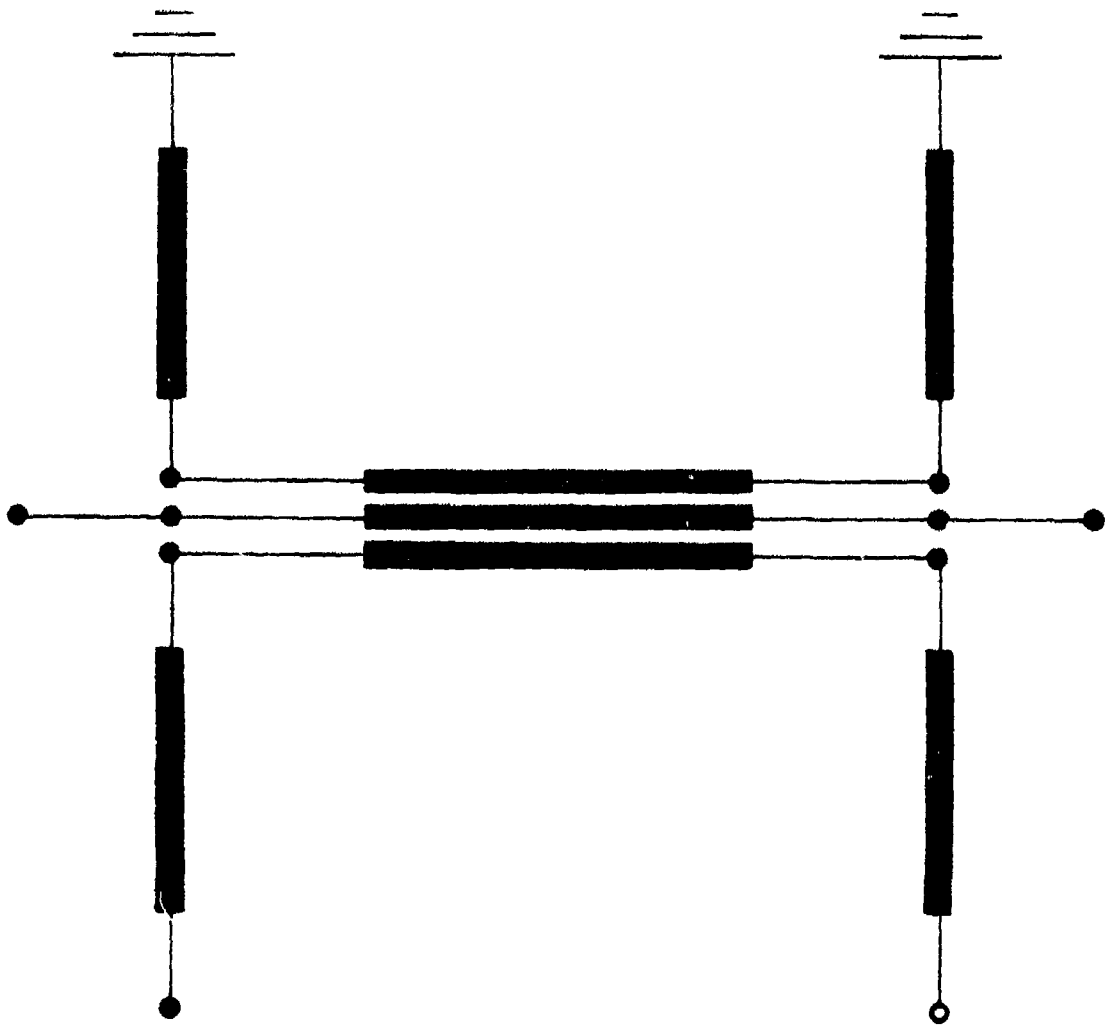

Figure 10. The Parallel Connection of the Networks N_A and N_{B1}

The characteristic admittance matrix of this three-wire line, from equations (50) and (58) is :-

$$
\begin{array}{c}
 \\ (1) \\ (2) \\ (3)
\end{array}
\begin{array}{c}
\begin{array}{ccc} (1) & (2) & (3) \end{array} \\
\begin{bmatrix}
\dfrac{\left[k_{12}{}^{A}+k_o(1-x)\right]^2}{k_{12}{}^{A}} & -\left[k_{12}{}^{A}+k_o(1-x)\right] & 0 \\
-\left[k_{12}{}^{A}+k_o(1-x)\right] & k_{12}{}^{A}+k_o+2k_{12}{}^{B}\left[\dfrac{1}{\sqrt{1+\omega_1{}^2}-1}\right] & -\left[k_o x+2k_{12}{}^{B}\left(\dfrac{1}{\sqrt{1+\omega_1{}^2}-1}\right)\right] \\
0 & -\left[k_o x+2k_{12}{}^{B}\left(\dfrac{1}{\sqrt{1+\omega_1{}^2}-1}\right)\right] & \dfrac{\left[\omega_1{}^2 k_o x+2k_{12}{}^{B}(1+\sqrt{1+\omega_1{}^2})\right]^2}{\omega_1{}^2 k_{12}{}^{B}(1+\sqrt{1+\omega_1{}^2})^2}
\end{bmatrix}
\end{array}
\tag{62}
$$

where line (1) is terminated in two open circuited shunt stubs of characteristic admittance,

$$
Y_1 = \frac{(k_{12}{}^{A} + k_o(1-x))^2}{k_{12}{}^{A}\left[\sqrt{1+\omega_2{}^2}-1\right]} \tag{63}
$$

Line (3) is terminated two short circuited shunt stubs of characteristic admittance,

$$
Y_3 = \frac{\left[\omega_1{}^2 k_o x + 2k_{12}{}^{B}(1+\sqrt{1+\omega_1{}^2})\right]^2}{k_{12}{}^{B}(1+\sqrt{1+\omega_1{}^2})^3} \tag{64}
$$

and the ends of line (2) provide the terminals for the input and output ports.

This network configuration is realisable with non-negative admittance values if the networks N_A and N_{B1} are realisable. Since the network N_A is realisable for all permissible values of x, and the network N_{B1} is realisable if,

$$k_o x - k_{12}{}^{B} \geq 0 \tag{65}$$

then by choosing x = 1 the realisability condition for the combination becomes,

$$k_o \geq k_{12}{}^{B} \tag{66}$$

In order to produce some flexibility in the design of this section, the impedance level of line (1) and (3) w. r. t. (2) may be modified without altering the characteristics of the network between the input and output ports on line (2). This is accomplished by multiplying the first row and column of the admittance matrix of the three-wire line by a constant and by multiplying the terminating admittance on line (1) by the square of the constant[9]. A similar procedure may also be applied to line (3).

For convenience, the factors

$$\frac{x_1}{\left[k_{12}{}^{A} + k_o(1-x)\right]} \quad \text{and} \quad \frac{x_2}{\left[k_o x + 2\, k_{12}{}^{B}\left(\frac{1}{\sqrt{1+\omega_1{}^2}} - 1\right)\right]} \tag{67}$$

are used to increase the impedance levels of lines (1) and (3) respectively, resulting in the characteristic admittance matrix of the three-wire line being reduced to,

$$\begin{array}{c} \\ (1) \\ (2) \\ (3) \end{array} \begin{array}{c} \begin{array}{ccc} (1) & (2) & (3) \end{array} \\ \begin{bmatrix} \dfrac{x_1{}^2}{k_{12}{}^{A}} & -x_1 & 0 \\ -x_1 & k_{12}{}^{A} + k_o + 2k_{12}{}^{B}\left[\dfrac{1}{\sqrt{1+\omega_1{}^2} - 1}\right] & -x_2 \\ 0 & -x_2 & \dfrac{\omega_1{}^2 x_2{}^2}{k_{12}{}^{B}(1 + \sqrt{1+\omega_1{}^2})^2} \end{bmatrix} \end{array} \tag{68}$$

where line (1) is terminated in two open circuited shunt stubs of characteristic admittance,

$$Y_{(1)} = \frac{x_1{}^2}{k_{12}{}^{A}\left[\sqrt{1+\omega_1{}^2} - 1\right]} \tag{69}$$

and line (3) is terminated in two short circuited shunt stubs of characteristic admittance,

$$Y_{(3)} = \frac{\omega_1^{\,4} x_2^{\,2}}{k_{12}^{\,B}\left(1 + \sqrt{1 + \omega_1^{\,2}}\right)^3} \tag{70}$$

The end view of the resulting interdigital section with the relevant characteristic admittance values are shown in Fig. 11. Obviously, the values of x_1 and x_2 must be chosen such that the element values are non-negative and this has been shown to be always possible if

$$k_o - k_{12}^{\,B} \geq 0 \tag{71}$$

Using the equations (38), this condition may be expanded in terms of the transmission zero $t_o = \sigma_o + j\,\omega_o$ resulting in,

$$\left[(1 + \sigma_o)^2 + |t_o|^2\right]^{\frac{1}{2}} \left[\omega_o^{\,2} - \sigma_o^{\,2}\right] \geq 2\,\sigma_o^{\,2}\,(1 + \sigma_o) \tag{72}$$

Thus, the condition $\omega_o^{\,2} > \sigma_o^{\,2}$ is at least necessary for realisation and, assuming this condition to be satisfied, condition (72) may be rewritten as

$$(1 + \sigma_o)^2\,(\omega_o^{\,2} - 3\,\sigma_o^{\,2}) + (\omega_o^{\,2} - \sigma_o^{\,2})^2 \geq 0 \tag{73}$$

which, for $\omega_o^{\,2} \geq 3\,\sigma_o^{\,2}$, is always satisfied. Hence, the contour defining realisability lies between two radial lines from the origin at 45° and 60° to the real axis in the t plane.

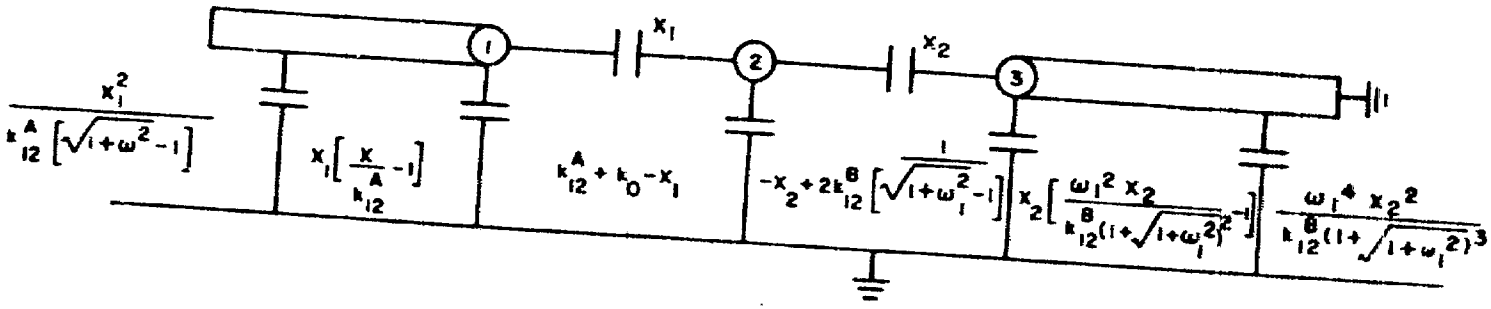

Figure 11. The Element Values Resulting From the Combination of the Networks N_A and N_{B1}

IV. GENERAL SYNTHESIS PROCEDURES

This section is concerned with the direct synthesis of microwave all-pass networks without reducing the network to a cascade of C-type and D-type sections. The first realisation to be considered is a cascade of two-wire lines and the second is a realisation in the form of an interdigital line structure.

Synthesis Using a Cascade of Two-Wire Lines

Let the scattering transfer function $S_{12}(t)$ of a resistively terminated, lossless, reciprocal, two-port network be of the form,

$$S_{12}(t) = \frac{H_n(-t)}{H_n(t)} \tag{74}$$

where $H_n(t)$ is a strict Hurwitz polynomial of degree n. then,

$$[Z_{2n}(t)] = \begin{bmatrix} z_{11} & z_{12} \\ z_{12} & z_{11} \end{bmatrix} \tag{75}$$

where

$$z_{11} = \frac{H_n^2(t) + H_n^2(-t)}{H_n^2(t) - H_n^2(-t)}$$

and (76)

$$z_{12} = \frac{2H_n(t)\,H_n(-t)}{H_n^2(t) - H_n^2(-t)}$$

is the impedance matrix of the corresponding lossless two-port.

Two-wire lines may now be extracted from this impedance matrix using Saito's extension of Richard's Theorem[8]. If $[Z_{2r}(t)]$ is the impedance matrix after the extraction of (n-r) two-wire lines then,

$$\left[Z_{2(r-1)}(t)\right] = \left[[Z_{2r}(t)] - t\,[Z_{2r}(1)]\right]\left[1 - t[Z_{2r}(1)]^{-1}\,[Z_{2r}(t)]\right]^{-1} \tag{77}$$

where

$$[Z_{2r}(t)] = \begin{bmatrix} z_{11r} & z_{12r} \\ z_{12r} & z_{11r} \end{bmatrix} \tag{78}$$

is the impedance matrix after the extraction (n - r + 1) lines.

Simplification of this recurrence formula results if $[Z_{2r}(t)]$ is expressed as,

$$[Z_{2r}(t)] = \begin{bmatrix} \dfrac{Z_{oer}(t) + Z_{oor}(t)}{2} & \dfrac{Z_{oer}(t) - Z_{oor}(t)}{2} \\ \dfrac{Z_{oer}(t) - Z_{oor}(t)}{2} & \dfrac{Z_{oer}(t) + Z_{oor}(t)}{2} \end{bmatrix} \tag{79}$$

or

$Z_{oer}(t) = z_{11r} + z_{12r}$ is the even mode impedance

and (80)

$Z_{oor}(t) = z_{11r} - z_{12r}$ is the odd mode impedance

and equation (77) then reduces to,

$$Z_{oe(r-1)}(t) = \frac{Z_{oer}(t) - t\,Z_{oer}(1)}{1 - t\,Y_{oer}(1)\,Z_{oer}(t)}$$

and (81)

$$Z_{oo(r-1)}(t) = \frac{Z_{oor}(t) - t\,Z_{oor}(1)}{1 - t\,Y_{oor}(1)\,Z_{oor}(t)}$$

Now if $Z_{oer}(t)\ Z_{oor}(t) = 1$, then

$$Z_{oe(r-1)}(t)\,Z_{oo(r-1)}(t) = \frac{1 + t^2 - t\,[Z_{oer}(t)\,Z_{oor}(1) + Z_{oer}(1)\,Z_{oor}(t)]}{1 + t^2 - t\,[Z_{oer}(t)\,Y_{oer}(1) + Z_{oor}(t)\,Y_{oor}(1)]}$$

$$= 1 \tag{82}$$

but,

$$Z_{oen}(t)\ Z_{oon}(t) = z_{11n}^2 - z_{12n}^2 = 1$$

Hence, by induction, $Z_{oer}(t)\ Z_{oor}(t) = 1$ and equations (81) reduce to,

$$\begin{aligned} Z_{oe(r-1)}(t) &= \frac{Z_{oer}(t) - t\ Z_{oer}(1)}{1 - t\ Y_{oer}(1)\ Z_{oer}(t)} \\ Z_{oo(r-1)}(t) &= Y_{oe(r-1)}(t) \end{aligned} \tag{83}$$

From equations (76) and (80), the original even-mode impedance is

$$Z_{oen}(t) = \frac{H_n(t) + H_n(-t)}{H_n(t) - H_n(-t)} \tag{84}$$

and the remaining even-mode impedances are obtained from successive applications of Richard's Theorem defined by equation (83) and the final network configuration is shown in Fig. 12.

Physical realisability of the structure requires that $Z_{oer}(1) > 1$ but no known condition exists upon $H_n(t)$ such that

$$Z_{oei}(1) \geq 1 \text{ for all } i \tag{85}$$

As an example of the procedure, consider the D-type section where $H_2(t) = |t_o|^2 + 2\sigma_o t + t^2$ i.e. from equation (84)

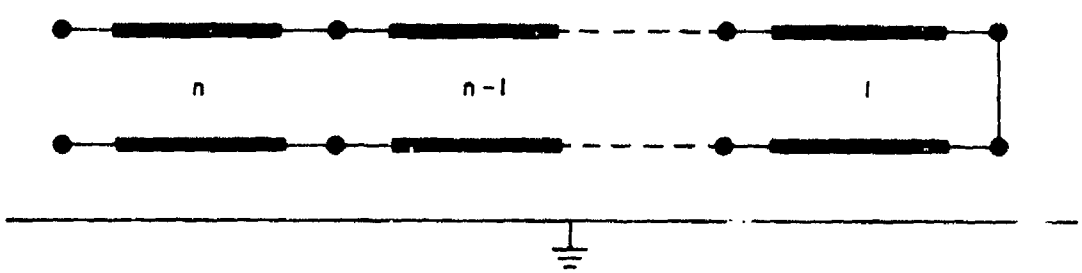

Figure 12. A Cascade of n, Two-Wire Lines

$$Z_{oe2}(t) \quad \frac{|t_o|^2 + t^2}{2\sigma_o t} \tag{86}$$

whence, from ation (83)

$$Z_{oe1}(t \quad = \quad \frac{|t_o|^2 \, Z_{oe2}(1)}{t}$$

yielding

$$Z_{oe2}(1) = \frac{1 + |t_o|^2}{2\sigma_o}$$

and (87)

$$Z_{oe1}(1) = |t_o|^2 \, Z_{oe2}(1)$$

as stated in section 2.

In general, this particular realisation procedure produces reasonable physical dimensions if the rate of change of the delay through the network does not vary rapidly with frequency. If this does occur then the following realisation procedure is more appropriate.

Synthesis Procedure Using an Interdigital Line

The following synthesis procedure is a procedure which may be applied to any symmetrical network which effectively contains one unit element. In the case of the all-pass network this means that $S_{12}(t)$ is of the form

$$S_{12}(t) = \frac{H(-t)}{H(t)} \left(\frac{1-t}{1+t}\right)^{1/2} \tag{88}$$

The general symmetrical network however, will possess a transfer matrix of the form

$$\frac{1}{\sqrt{1-t^2}\, F(t)} \begin{bmatrix} A(t) & B(t) \\ C(t) & A(t) \end{bmatrix} \tag{89}$$

The even and odd mode impedance for this network are defined as

$$Z_{oe}(t') = \frac{A\left(\frac{2t'}{1+t'^2}\right) + \left(\frac{1-t'^2}{1+t'^2}\right) F\left(\frac{2t'}{1+t'^2}\right)}{C\left(\frac{2t'}{1+t'^2}\right)} \tag{90}$$

and

$$Z_{oo}(t') = \frac{A\left(\frac{2t'}{1+t'^2}\right) - \left(\frac{1-t'^2}{1+t'^2}\right) F\left(\frac{2t'}{1+t'^2}\right)}{C\left(\frac{2t'}{1+t'^2}\right)} \tag{91}$$

where

$$t = \frac{2t'}{1+t'^2} \quad \text{i.e. } t' = \tanh\frac{p}{2}$$

which yields the condition,

$$Z_{oo}(t') = Z_{oe}\left(\frac{1}{t'}\right) \tag{92}$$

which uniquely defines $Z_{oo}(t')$ in terms of $Z_{oe}(t')$.

In order to formulate the synthesis procedure, consider the impedance parameters corresponding to the transfer matrix (89) defined as,

$$\begin{aligned} z_{11} &= \frac{A(t)}{C(t)} \\ z_{12} &= \frac{\sqrt{1-t^2}\,(F(t)}{C(t)} \end{aligned} \tag{93}$$

A unit element may be extracted in series from the network of characteristic impedance Z_o, to give,

$$\begin{aligned} z'_{11} &= \frac{A(t)}{C(t)} - \frac{Z_o}{t} \\ z'_{12} &= \sqrt{1-t^2}\left[\frac{F(t)}{C(t)} - \frac{Z_o}{t}\right] \end{aligned} \tag{94}$$

$$Z'_{oe}(t') = z'_{11} + z'_{12}$$

$$= Z_{oe}(t') - \frac{Z_o}{t'} \tag{95}$$

and

$$Z'_{oo}(t') = Z_{oo}(t') - Z_o t' \tag{96}$$

Since

$$Z_{oo}(t') = Z_{oe}\left(\frac{1}{t'}\right) \text{ then,}$$

$$Z'_{oo}(t') = Z'_{oe}\left(\frac{1}{t'}\right) \tag{97}$$

This step in the synthesis procedure has extracted a series capacitor of impedance $\frac{Z_o}{t'}$ from the even-mode network. Physically, this implies that an interdigital line section has been extracted from the network with a coupling admittance Y_o.

The complementary procedure to the one just described, is the extraction of a shunt unit element. Here,

$$y_{11} = \frac{A(t)}{B(t)}$$

$$y_{12} = \frac{\sqrt{1-t^2}\,F(t)}{B(t)} \tag{98}$$

and the extraction of a shunt unit element produces

$$y'_{11} = \frac{A(t)}{B(t)} - \frac{Y_o}{t}$$

$$y'_{12} = \sqrt{1-t^2}\left[\frac{F(t)}{B(t)} - \frac{Y_o}{t}\right] \tag{99}$$

but,

$$Y_{oe}(t') = \frac{1}{Z_{oe}(t')} = \frac{A\left(\frac{2t'}{1+t'^2}\right) - \left(\frac{1-t'^2}{1+t'^2}\right) F\left(\frac{2t'}{1+t'^2}\right)}{B\left(\frac{2t'}{1+t'^2}\right)}$$

and

$$Y_{oo}(t') = \frac{1}{Z_{oo}(t')} = \frac{1}{Z_o\left(\frac{1}{t'}\right)}$$

hence,

$$Y'_{oe}(t') = Y_{oe}(t') - Y_o t' \tag{100}$$

$$Y'_{oo}(t') = Y_{oo}(t') - \frac{Y_o}{t'}$$

and

$$Y'_{oo}(t') = Y'_{oe}\left(\frac{1}{t'}\right) \tag{101}$$

This extraction procedure has removed capacitance between the interdigital line and ground or in terms of the even-mode network has removed a shunt capacitor.

Consider the admittance parameters defined in equations (98). If two identical admittances Y(t), were to be extracted one from each of the network then the remaining parameters would be

$$y'_{11} = \frac{A(t)}{B(t)} - Y(t)$$

$$y'_{12} = y_{12} \tag{102}$$

The corresponding even and odd mode parameters are,

$$Y'_{oe}(t') = Y_{oe}(t') - Y\left(\frac{2t'}{1+t'^2}\right)$$

$$Y'_{oo}(t') = Y_{oo}(t') - Y\left(\frac{2t'}{1+t'^2}\right) \tag{103}$$

and

$$Y'_{oo}(t') = Y'_{oe}\left(\frac{1}{t'}\right)$$

The extraction of the admittance Y(t) from each end of the network is equivalent to removing Y(t) from each end of one of the lines in the interdigital line. In terms of the even mode network a 'resonant' admittance $Y'(t)$ (i.e. $Y'(t) = Y'(1/t')$) has been extracted.

A similar approach may be made to extract series impedances but should normally be avoided due to the difficulty in practical realisation.

It has been shown that series and shunt capacitors, and series and shunt 'resonant' admittances may be extracted from the even-mode impedance and have a direct physical representation in terms of a loaded interdigital line structure. Obviously, if the network is to be synthesised in this form, the extraction of elements from the even-mode impedance must be degree reducing procedures. In order to present the various ways of extraction which may be used to achieve this, an example is presented.

In general, for an all-pass network

$$Z_{oe}(t') = \frac{H\left(\frac{2t'}{1+t'^2}\right)(1+t') + H\left(\frac{-2t'}{1+t'^2}\right)(1-t')}{H\left(\frac{2t'}{1+t'^2}\right)(1+t') - H\left(\frac{-2t'}{1+t'^2}\right)(1-t')} \tag{104}$$

and the example chosen is the D-type section where

$$H(t) = |t_o|^2 + 2\sigma_o t + t^2$$

resulting in,

$$Z_{oe_o}(t') = \frac{|t_o|^2 + 2\,(|t_o|^2 + 2 + 2\sigma_o)\,t'^2 + (4\sigma_o + |t_o|^2)\,t'^4}{t'\left[(4\sigma_o + |t_o|^2) + 2\,(|t_o|^2 + 2 + 2\sigma_o)\,t'^2 + |t_o|^2\,t'^4\right]} \tag{105}$$

A series open-circuited stub is extracted from the even-mode impedance (this is equivalent to extracting a unit element in series with the network) to give,

$$Z_{oe_1}(t') = Z_{oe_o}(t') - \frac{Z_o}{t'} \tag{106}$$

Z_o is chosen to be the residue of $Z_{oe_o}(t')$ at the origin. i.e.

$$Z_o = t'\,Z_{oe_o}(t')\Big|_{t'=0} = \frac{|t_o|^2}{4\sigma_o + |t_o|^2} \tag{107}$$

where,

$$Z_{oe_1}(t') = \frac{\left[8\sigma_o t'\,|t_o|^2 + 2 + 2\sigma_o) + t'^2\,(2\sigma_o\,(2\sigma_o + |t_o|^2)\right]}{(4\sigma_o + |t_o|^2)\,\left[(4\sigma_o + |t_o|^2) + 2\,t'^2\,(|t_o|^2 + 2 + 2\sigma_o) + |t_o|^2\,t'^4\right]} \tag{108}$$

A short circuited shunt stub $Z_1 t$ is now extracted from $Z_{oe_1}(t')$ (this is equivalent to extracting $Z_1 t$ from each end of the network) to yield,

$$Y_{oe_2}(t') = Y_{oe_1}(t') - Y_1\,\frac{(1 + t'^2)}{2t'} \tag{109}$$

and

$$Y_1 = t'\,Y_{oe_1}(t')\Big|_{t'=0} = \frac{(4\sigma_o + |t_o|^2)^2}{4\sigma_o\,(|t_o|^2 + 2 + 2\sigma_o)} \tag{110}$$

producing

$$Z_{oe_2}(t') = \frac{4\sigma_o\,(|t_o|^2 + 2 + 2\sigma_o)\,\left[|t_o|^2 + 2 + 2\sigma_o + (2\sigma_o + |t_o|^2)\,t'^2\right]}{(4\sigma_o + |t_o|^2)\,t'\,\left[|t_o|^2\,(3 - 2\sigma_o) + 4\,(1 + \sigma_o - \sigma_o^2) + t'^2\,[(1 - 2\sigma_o)\,|t_o|^2 - 4\sigma_o^2]\right]} \tag{111}$$

Extracting a series open circuited stub $\frac{Z_2}{t'}$ yields

$$Z_{oe_3}(t') = Z_{oe_2}(t') - \frac{Z_2}{t'} \tag{112}$$

where

$$Z_2 = \frac{4\sigma_o}{4\sigma_o + |t_o|^2} \tag{113}$$

in order to provide a zero of $Z_{oe_3}(t')$ at $t' = jl$.

Now,

$$Y_{oe_3}(t') = \frac{t' \left[|t_o|^2 (3-2\sigma_o) + 4(1+\sigma_o-\sigma_o^2) + t'^2 \left[(1-2\sigma_o)|t_o|^2 - 4\sigma_o^2 \right] \right]}{4\sigma_o (|t_o|^2 + 2\sigma_o + 1)(1+t'^2)} \tag{114}$$

from which an open-circuited stub Y_3 t may be extracted to give,

$$Y_{oe_4}(t') = Y_{oe_3}(t') - \frac{2Y_3 t'}{1+t'^2} \tag{115}$$

where

$$Y_3 = \frac{(1+t'^2)}{2t'} \left. Y_{oe_3}(t') \right|_{t'=jl}$$

$$= \frac{(|t_o|^2 + 2 + 2\sigma_o)}{4\sigma_o (|t_o|^2 + 2\sigma_o + 1)} \tag{116}$$

and

$$Y_{oe_3}(t') = \frac{\left[(1-2\sigma_o)|t_o|^2 - 4\sigma_o^2 \right] t'}{4\sigma_o (|t_o|^2 + 2\sigma_o + 1)} \tag{117}$$

where

$$Y_4 = \frac{(1-2\sigma_o)\,|t_o|^2 - 4\sigma_o^2}{4\sigma_o\,(|t_o|^2 + 2\sigma_o + 1)} \tag{118}$$

is the characteristic admittance of the last interdigital line to ground.

The impedances Z_1, Z_2 and Z_3 are always positive and Z_4 is positive if,

$$(1 - 2\sigma_o)\,|t_o|^2 \geq 4\sigma_o^2 \tag{119}$$

The final even-mode network is shown in Fig. 13 and the complete coupled line network is shown in Fig. 14 where the characteristic admittance matrix of the three-wire interdigital line is:-

$$\begin{array}{c} \\ (1) \\ (2) \\ (3) \end{array} \begin{array}{c} \begin{array}{ccc} (1) & (2) & (3) \end{array} \\ \begin{bmatrix} \dfrac{|t_o|^2 + 4\sigma_o}{|t_o|^2} & \dfrac{-(|t_o|^2 + 4\sigma_o)}{|t_o|^2} & 0 \\ \dfrac{-(|t_o|^2 + 4\sigma_o)}{|t_o|^2} & \dfrac{(|t_o|^2 + 4\sigma_o)}{4\sigma_o\,|t_o|^2} & \dfrac{-(|t_o|^2 + 4\sigma_o)}{4\sigma_o} \\ 0 & \dfrac{-(|t_o|^2 + 4\sigma_o)}{4\sigma_o} & \dfrac{(|t_o|^2 + 2 + 2\sigma_o)(|t_o|^2 + 2\sigma_o)}{4\sigma_o\,(|t_o|^2 + 2\sigma_o + 1)} \end{bmatrix} \end{array} \tag{120}$$

and line (2) is terminated in two short circuited shunt stubs of characteristic admittance,

$$Y_2 = \frac{(|t_o|^2 + 4\sigma_o)^2}{4\sigma_o\,(|t_o|^2 + 2 + 2\sigma_o)} \tag{121}$$

Line (3) is terminated in two open circuited shunt stubs of characteristic admittance,

$$Y_3 = \frac{(|t_o|^2 + 2 + 2\sigma_o)}{4\sigma_o\,(|t_o|^2 + 2\sigma_o + 1)} \tag{122}$$

and the ends of line (1) provide the terminals for the input and output ports.

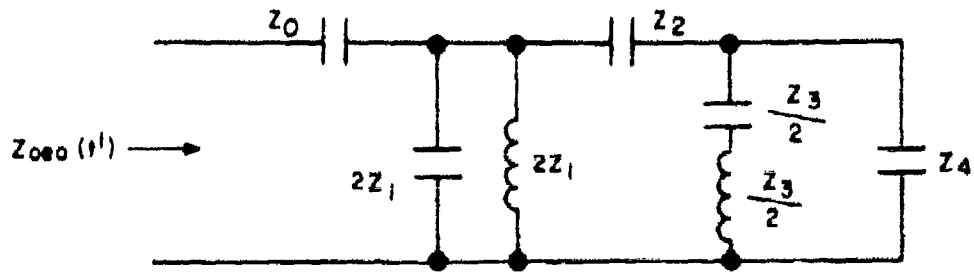

Figure 13. The Even-Mode Network Resulting From the Interdigital Realisation of a Microwave D-Type Section in Cascade With a Unit Element

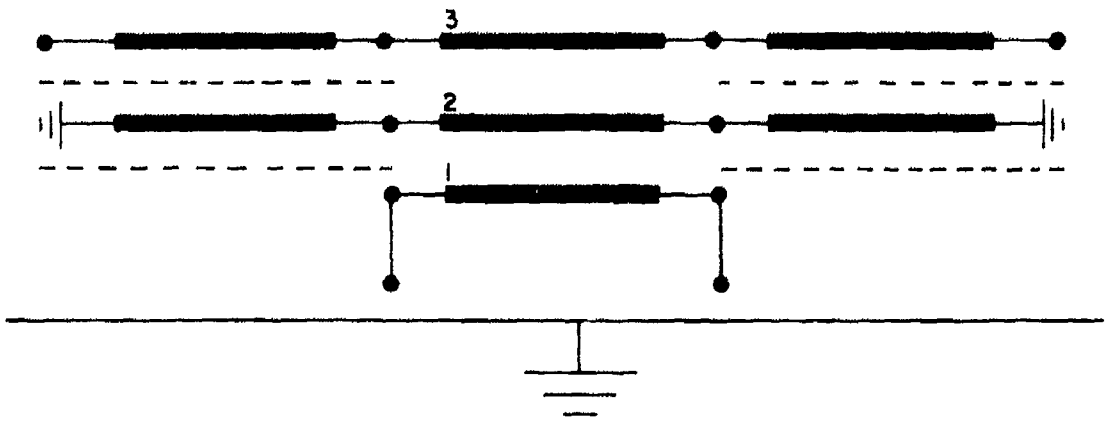

Figure 14. The Interdigital Network Realising a Cascade Microwave D-Typ Section and Unit Element

In general, the impedance levels of the lines 2 to n may be changed with respect to line (1) in a manner similar to that used in section 2. In this example, the second row and column of the admittance matrix may be multiplied by the factor,

$$\frac{x_2 \, |t_o|^2}{|t_o|^2 + 4\sigma_o} \tag{123}$$

and the third row and column by

$$\frac{x_3 \, 4\sigma_o}{|t_o|^2} \tag{124}$$

to yield the admittance matrix of the three-wire line as,

$$
\begin{array}{c}
 \\ (1) \\ (2) \\ (3)
\end{array}
\begin{array}{c}
\begin{array}{ccc} (1) & (2) & (3) \end{array} \\
\begin{bmatrix}
\dfrac{|t_o|^2 + 4\sigma_o}{|t_o|^2} & -x_2 & 0 \\
-x_2 & \dfrac{x_2^2\,|t_o|^2}{4\sigma_o} & -x_2x_3 \\
0 & -x_2x_3 & \dfrac{x_3^2\,4\sigma_o\,(|t_o|^2 + 2 + 2\sigma_o)\,(|t_o|^2 + 2\sigma_o)}{|t_o|^4\,(|t_o|^2 + 2\sigma_o + 1)}
\end{bmatrix}
\end{array}
\tag{125}
$$

where line (3) is terminated in two short circuited shunt stubs of characteristic admittance

$$Y_{(2)} = \frac{x_2^2\,|t_o|^4}{4\sigma_o\,(|t_o|^2 + 2 + 2\sigma_o)} \tag{126}$$

and line (3) is terminated in two open circuited shunt stubs of characteristic admittance,

$$Y_{(3)} = \frac{x_3^2\,4\sigma_o\,(|t_o|^2 + 2 + 2\sigma_o)}{|t_o|^4\,(|t_o|^2 + 2\sigma_o + 1)} \tag{127}$$

The values for x_1 and x_2 are chosen so that the coupling and ground admittances are non-negative and this may be achieved in this case if

$$(1 - 2\sigma_o)\,|t_o|^2 \geq 2\sigma_o \tag{128}$$

From this condition, a necessary restriction is that $\sigma_o < \frac{1}{2}$ indicating that the transmission zero must lie in the vicinity of the imaginary axis and therefore must inherently produce a resonant delay characteristic.

In the remaining section of this paper some applications of microwave all-pass networks are considered.

V. APPLICATIONS

Initially it is demonstrated how microwave all-pass networks may be used to provide phase correction to conventional microwave filters and then a method is described by which a network with a linear delay-frequency characteristic may be constructed, the latter being of particular importance in the compression of linearly frequency swept pulses.

VI. PHASE CORRECTION OF A CONVENTIONAL MICROWAVE FILTER

As an example of the use of microwave all-pass networks as phase correcting networks consider a stepped impedance transformer. Here,

$$|S_{12}(t)|^2 = \frac{1}{1 + h^2 T_n^2 \left(\frac{\cos \omega}{\cos \omega_0}\right)} \tag{129}$$

and for illustration the particular numerical example to be considered is the case $n = 5$, $\cos \omega_0 = 0 \cdot 6$ and a ripple level in the pass band of $0 \cdot 2$ db. $S_{12}(t)$ may be constructed in the usual manner and the delay of $S_{12}(t)$ calculated. Fig. 15 shows the normalised delay T_g plotted as a function of $\cos \omega$ and reveals that the difference between the band centre and peak (band edge) delays is $5 \cdot 73$. It is evident from the shape of the curve that a single C-type section will not provide any substantial correction. A D-type section alone is also of little use since if it has a peak delay this must occur at some value of $\cos \omega$ below $0 \cdot 6$ and thus by considering values about band centre little improvement is likely to result. However, as will be seen, the combination of a C-type and D-type section does improve the delay characteristic considerably. Fig. 16 (a) shows the combination of the filter delay with D-type sections having $|t_0| = 2$ and σ_0 $1 \cdot 2$ and $1 \cdot 4$. These values are chosen to give a combined characteristic as near as possible to the inverse of the C-type section. A little experimentation with various D-type sections at this stage shows that this network alone is of little use and also reveals that it is advantageous to choose $|t_0|$ greater than unity. Using Fig. 16 (a) a C-type section is then chosen to obtain the smallest variation over the passband and this is shown in Fig. 16 (b). The best result is obtained with the D-type section having $|t_0| = 2$, $\sigma_0 = 1 \cdot 2$ and = C-type section with $\sigma_0 = \frac{10}{3}$. This combination results in a delay variation of $1 \cdot 8$ as compared to the original value of $5 \cdot 73$, a considerable improvement. In the limit, of course, further C-type and D-type sections may be added to produce any desired improvement.

To complete the example the required network will be synthesised. For this network

$$S_{12}(t) = \frac{H(-t)}{H(t)}$$

where

$$H(t) = \left(t^2 + \frac{12}{5} t + 4\right)\left(t + \frac{10}{3}\right) \tag{130}$$

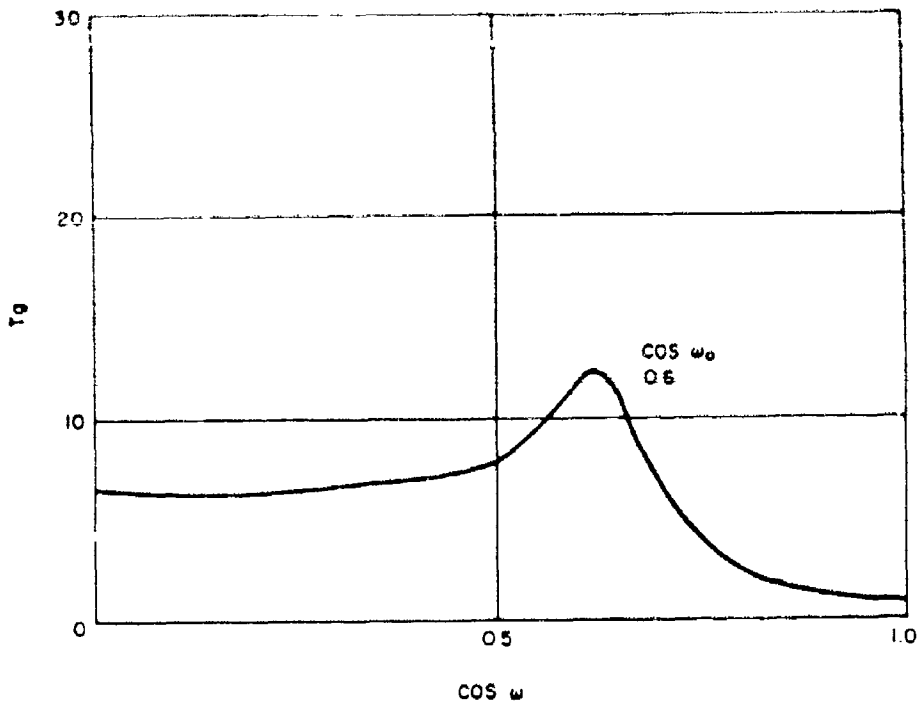

Figure 15. The Delay Characteristic For the Five Element, Stepped, Impedance Transformer Considered in the Numerical Example

This network may be synthesised as a cascade of two-wire line. In this case, the even-mode impedance Z_1 (t) is,

$$Z_1(t) = \frac{H(t) + H(-t)}{H(t) - H(-t)}$$

$$= \frac{2(43t^2 + 100)}{15t(t^2 + 12)} \tag{131}$$

Thus,

$$Z_1(1) = \frac{--}{15} \tag{132}$$

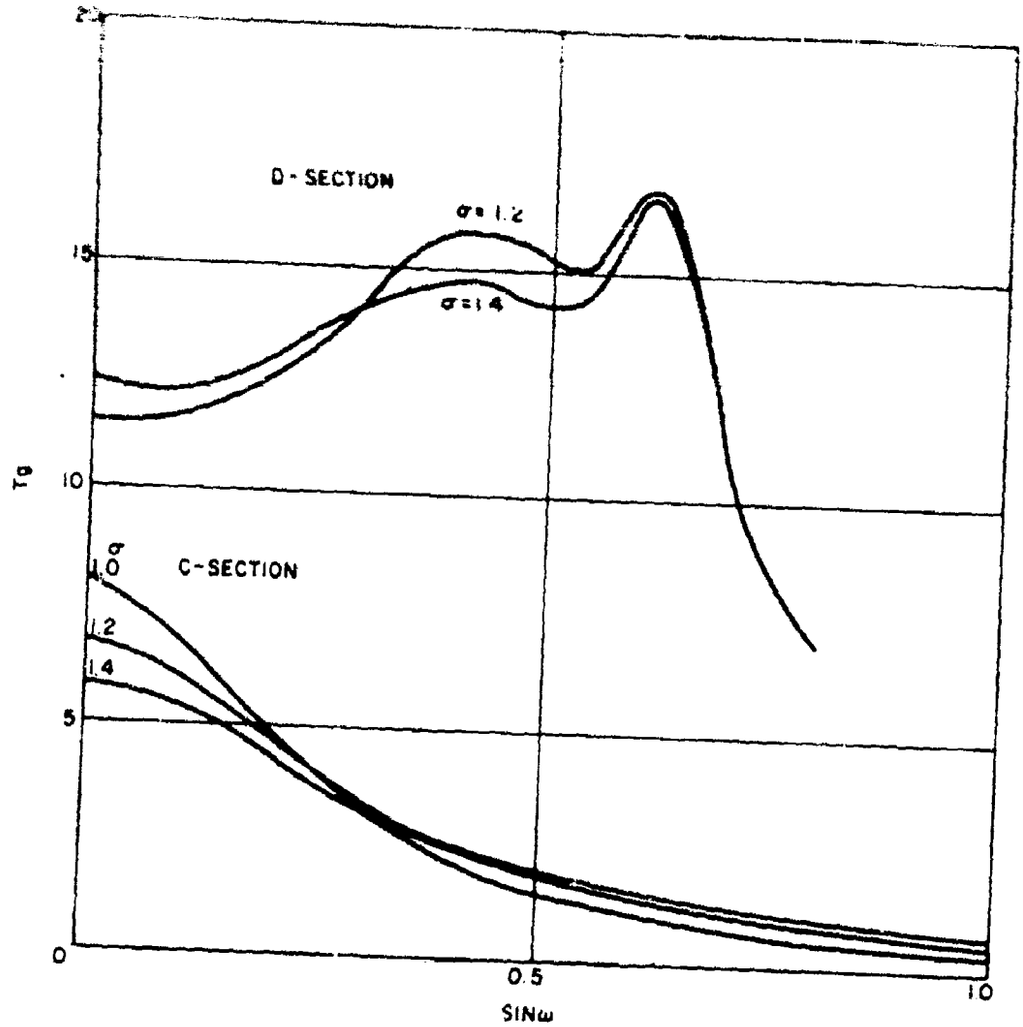

Figure 16a. The Delay Characteristics of the Microwave C-Type and D-Type Sections Considered in the Numerical Example

and

$$Z_2(t) = Z_1(1)\left[\frac{Z_1(t) - tZ_1(1)}{Z_1(1) - tZ_1(t)}\right] \tag{133}$$

$$= \frac{11(11t^2 + 100)}{240t}$$

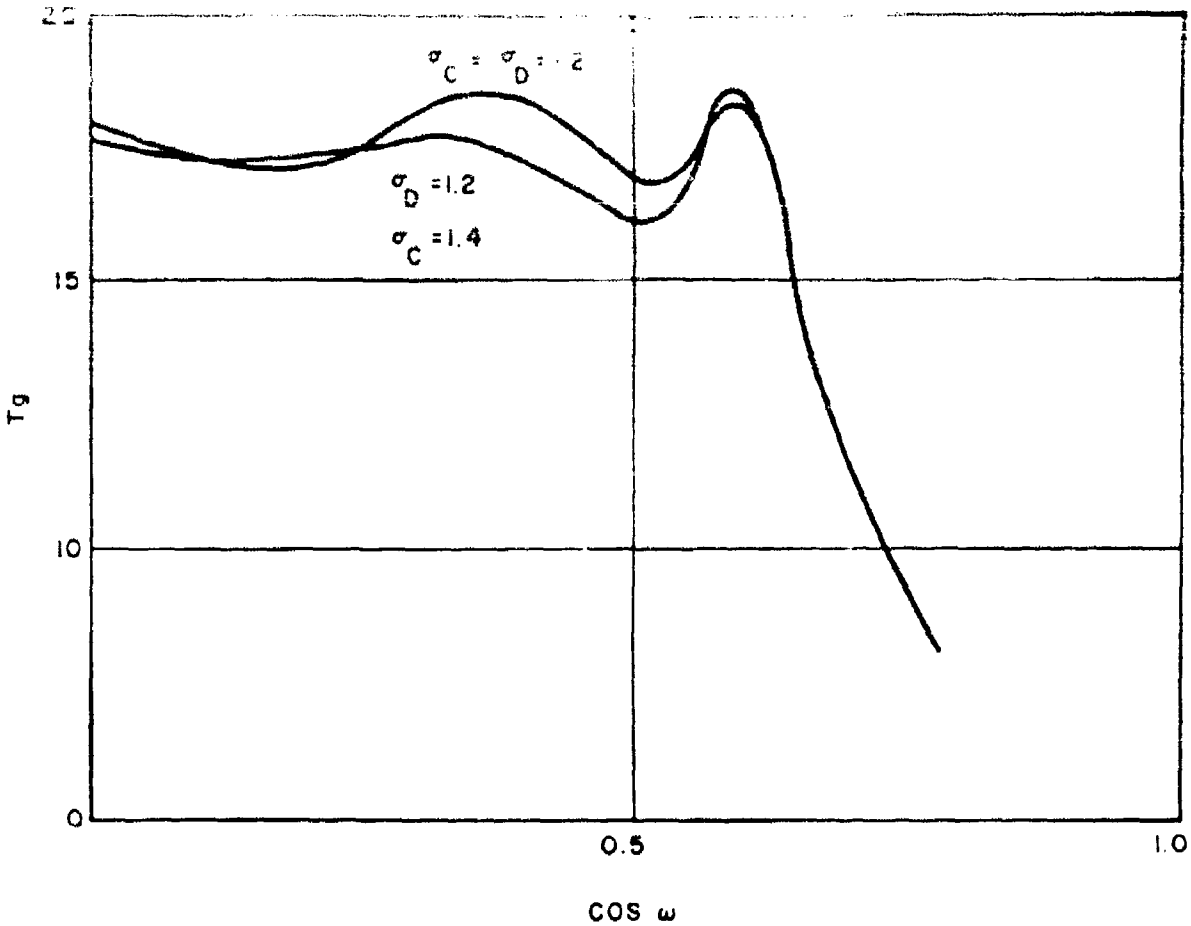

Figure 16b. The Delay Characteristics of the Microwave C-Type and D-Type Sections Considered in the Numerical Example

resulting in

$$Z_2(1) = \frac{407}{80}$$

and

$$Z_3(1) = \frac{185}{4} \tag{134}$$

Hence, since all of the even-mode impedances are greater than unity, the network is realisable with positive values of admittance.

A similar phase correcting technique may be applied to most conventional microwave filters but a realisation of the phase correcting network in the form of a cascade of two-wire lines is not always possible. To illustrate this point, consider a low-pass filter with,

$$|S_{12}(t)|^2 = \frac{1}{1 + \epsilon^2 T_n^2 \left(\frac{\sin \omega}{\sin \omega_0}\right)} \tag{135}$$

In general, the delay characteristic of this network is of the same form as the corresponding stepped impedance transformer with $\cos \omega$ and $\cos \omega_0$ replaced by $\sin \omega$ and $\sin \omega_0$ respectively and subsequently, the corresponding phase correction network would be the same as for the stepped impedance transformer with $H_n(t)$ replaced by $t^n H_n\left(\frac{1}{t}\right)$. Performing this operation on the numerical example considered, the resulting even-mode impedances would be,

$$Z_1 = \frac{15}{22}$$

$$Z_2 = \frac{1665}{736} \tag{136}$$

$$Z_3 = \frac{333}{1280}$$

resulting in lines 1 and 3 being unrealisable due to the negative value of coupling admittance. In a case such as this a more general type of realisation must be sought as shown in section 2.

VII. ALL PASS NETWORKS WITH LINEAR DELAY CHARACTERISTICS

The realisations of the microwave all-pass networks in the interdigital form presented in section 3, and realisations in the form of the cascaded networks N_A with N_{B1} as described in section 2, inherently produce resonant delay characteristics. A delay characteristic of this form is not usually required for the phase correction of conventional microwave filters but is ideal for applications where large rates of change of delay are required over relatively small bandwidths (20% or less). One particularly important application which is to be discussed is the case where the delay varies in a linear manner with frequency over a band and where the ratio of the delays at the band edges is considerably greater than unity. One application of such a network, as previously mentioned, is for the compression of linearly swept pulses as used in pulse compression radar.

The idealised delay characteristic which is to be approximated is shown in Fig. 17. The constant additive delay, which increases with the addition of unit elements into the network, is an unimportant factor in this particular case. The important factors are the bandwidth B(c/s), the dispersion $D = T_{g2} - T_{g1}$ (secs) where T_{g2} and T_{g1} are the delays at the band edges, and the compression ratio C defined as,

$$C = BD \tag{137}$$

which is twice the area under the delay curve over the band B, excluding the constant delay.

It may readily be shown that the area contained under the delay characteristic of a single D-type section expressed as a plot of delay in secs, against frequency in c/s, is unity per quarter wave length frequency. Thus, if n is the degree of S_{12} (t) then

$$n \geq C \tag{138}$$

For pulse compression networks, C is normally of the order of 50 and hence $n \geq 50$ or at least 25 D-type sections are required. Thus, due to the large number of D-type sections which are required, a first ordered approximation to linear delay may be made in the following manner:

Consider a D-type section with a transmission zero $t_o = \sigma_o + j\omega_o$ where

$$|t_o| \gg \sigma_o \tag{139}$$

then the maximum delay of the section occurs at $\tan \omega \approx |t_o|$ and has a value,

$$T_{gmax} \approx \frac{2(1 + |t_o|^2)}{\sigma_o} \tag{140}$$

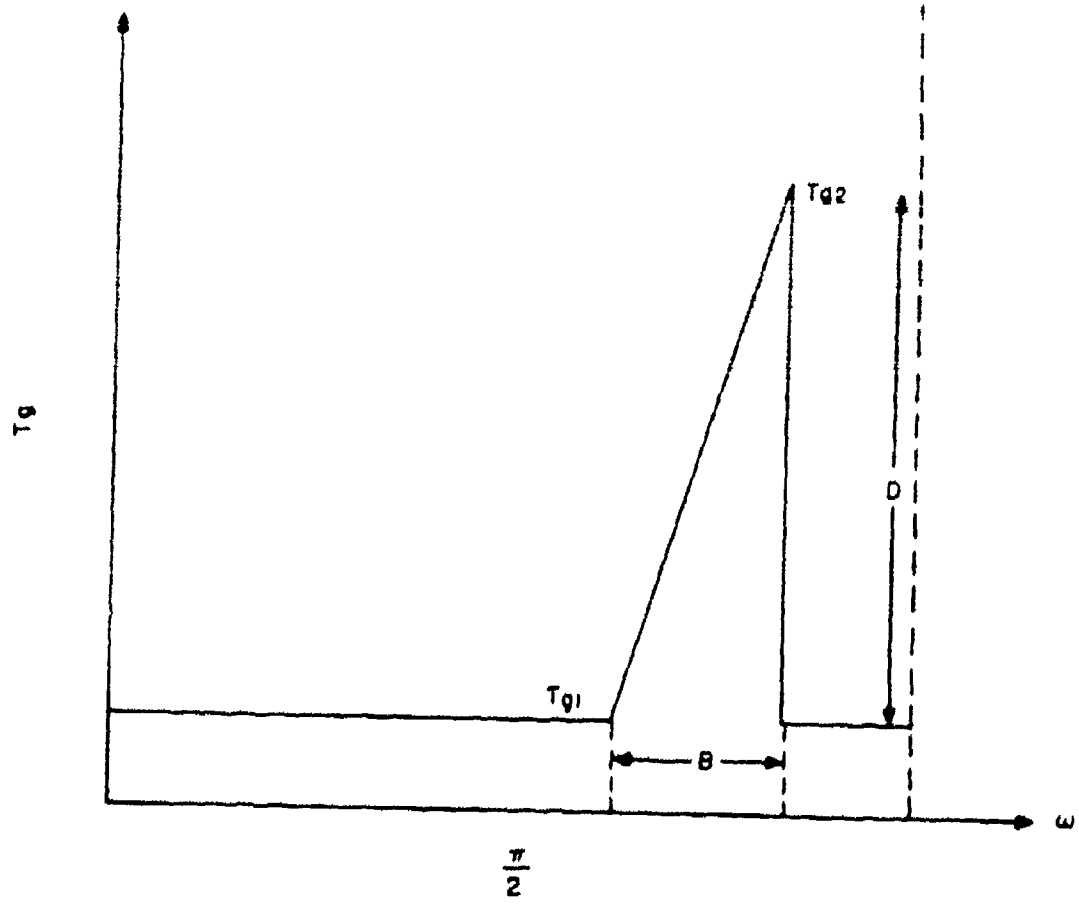

Figure 17. Idealised Delay Characteristic

Since the area under the delay curve of each D-type section in the network is equally divided above and below the point tan $\omega = |t_o|$, the area under the delay curve will increase in an approximately linear manner over the band B if

$$|t_T| = \tan 2\pi k_o \left(f_1 + \left(\frac{\gamma}{n}\right)^{1/2} B \right) \tag{141}$$

$$\gamma = 1, 2, \ldots n$$

where $4K_o (f_1 + B) < 1$

Also, if condition (139) and equation (140) are used, the deviation from linear delay may be minimised if,

$$\frac{\sigma_\gamma}{1 + |t_\gamma|^2} + \frac{\sigma_{\gamma+1}}{1 + |t_{\gamma+1}|^2} = \frac{4K_0 B(1 + \gamma - \sqrt{\gamma})}{n^{1/2}} \tag{142}$$

and if m is the number of D-type sections,

$$C \approx m \tag{143}$$

For most practical purposes, a close approximation to linear delay will be necessary and this may be achieved using numerical techniques with this first ordered approximation as the initial conditions.

VIII. CONCLUSIONS

A generalised theory of commensurate microwave all-pass networks has been presented. The typical delay characteristics for this class of networks has been presented and procedures for the approximation of specified characteristics have been indicated. Using general synthesis procedures for the realisation of C-type and D-type all-pass microwave sections, with and without a cascaded unit element, it has been shown that any delay characteristic of the form,

$$T_g = (1 - t^2) \left[\frac{H'(t)}{H(t)} + \frac{H'(-t)}{H(-t)} \right]$$

where $t = \tanh p$, may always be realised within an additive constant.

Finally, two synthesis procedures have been presented for the direct realisation of microwave all-pass networks without the reduction to a cascade of C-type and D-type sections. The first realisation, in the form of a cascade of two-wire lines, is useful for the phase correction of some conventional microwave filters, while the second realisation, in interdigital form, will produce delay characteristics where the delay varies rapidly over a small band of frequencies.

REFERENCES

1. SCANLAN, J. O. and RHODES, J. D. : "Cascade Synthesis of Distributed Networks", Polytechnic Institute of Brooklyn Symposium on Generalised Networks; April 1966.

2. SCANLAN, J. O. and RHODES, J. D. : "Microwave Networks with Constant Delay", To be published in I. E. E. E. Trans. on Circuit Theory.

3. SCANLAN, J. O. and RHODES, J. D. : "Synthesis of Prescribed Frequency/ Group Delay Characteristics Using Passive Microwave Components", I. E. E. Conference Publication, No. 20, pp. 74-79; February 1966.

4. STEENAART, W. J. D. : "The Synthesis of Coupled-Transmission-line All-pass Networks", I. E. E. E. Trans. on Microwave Theory and Techniques, Vol. MTT-11, pp. 23-29; January 1963.

5. RIBLET, H. J. : "General Synthesis of Quarter-wave Impedance Transformers", I. R. E. Trans. on Microwave Theory and Techniques, Vol. MTT-5, pp. 36-43; January 1957.

6. LEVY, R. : "Tables of Element Values for the Distributed Low-pass Prototype Filter", I. E. E. E. Trans. on Microwave Theory and Techniques, Vol. MTT-13, pp. 514-536; September 1965.

7. ZYSMAN, G. I. and MATSUMOTO, A. : "Properties of Microwave C-sections", I. E. E. E. Trans. on Circuit Theory, Vol. CT-12, pp. 74-81, March 1965.

8. SAITO, N. : "Richard's Theorem Extended to Two-Terminal-Pair Networks", The Reports of the Research Institute of Electrical Communication, Tohoku University, SCI. REP. RITU, B-(Elect. Comm.), Vol. 14, No. 1; 1962.

9. WENZEL, R. J. : "Exact Theory of Interdigital Band-pass Filters and Related Coupling Structures", I. E. E. E. Trans. on Microwave Theory and Techniques, Vol. MTT-13, pp. 559-575; September 1965.

UNCLASSIFIED
Security Classification

DOCUMENT CONTROL DATA - R & D

(Security classification of title, body of abstract and indexing annotation must be entered when the overall report is classified)

1. ORIGINATING ACTIVITY (Corporate author) University of Leeds Leeds, England	2a. REPORT SECURITY CLASSIFICATION UNCLASSIFIED 2b. GROUP NA

3. REPORT TITLE

MICROWAVE ALL-PASS NETWORKS

4. DESCRIPTIVE NOTES (Type of report and inclusive dates)

5. AUTHOR(S) (First name, middle initial, last name)

J. O. Scanlan
J. D. Rhodes

6. REPORT DATE September 1967	7a. TOTAL NO. OF PAGES 78	7b. NO. OF REFS 9
8a. CONTRACT OR GRANT NO AF61(052)-925 b. PROJECT NO 4506 c. d.	9a. ORIGINATOR'S REPORT NUMBER(S) 9b. OTHER REPORT NO(S) (Any other numbers that may be assigned this report) RADC-TR-67-385	

10. DISTRIBUTION STATEMENT

This document has been approved for public release and sale; its distribution is unlimited.

11. SUPPLEMENTARY NOTES FOAR Monitor - L/C Donald C. Kipfer RADC Scientist - Haywood E. Webb, Jr.	12. SPONSORING MILITARY ACTIVITY RADC - FOAR

13. ABSTRACT

In this paper it ~~is shown~~ that any arbitrary delay characteristic of a commensurate microwave network which supports a T.E.M. mode of propagation, may be realized by means of a transformerless, coupled-line network within an arbitrary additive constant. The realization procedure presented is based upon the synthesis of microwave C-type and D-type all-pass sections. Synthesis procedures are also developed for the direct realization of a complete all-pass network which include interdigital line structures.

The application of microwave all-pass networks to the phase correction of conventional microwave filters and to the construction of delay networks with linear delay characteristics is also presented.

DD FORM 1 NOV 65 1473

UNCLASSIFIED
Security Classification

UNCLASSIFIED
Security Classification

14. KEY WORDS	LINK A ROLE	LINK A WT	LINK B ROLE	LINK B WT	LINK C ROLE	LINK C WT
Circuit theory						
Network theory						
Bandpass						
Filter						
Delay						
Phase						
Broadband						
Microwave						

UNCLASSIFIED
Security Classification