AIR FORCE REPORT NO.
SSD-TR-67-95

AEROSPACE REPORT NO.
TR-1001(2240-20)-11

AD658851

Microwave Breakdown of the Reentry Boundary Layer

MAY 1967

Prepared by W. P. THOMPSON, M. EPSTEIN, and C. J. LENANDER
Aerodynamics and Propulsion Research Laboratory
Laboratories Division
Laboratory Operations
AEROSPACE CORPORATION

Prepared for BALLISTIC SYSTEMS AND SPACE SYSTEMS DIVISIONS
AIR FORCE SYSTEMS COMMAND
LOS ANGELES AIR FORCE STATION
Los Angeles, California

THIS DOCUMENT HAS BEEN APPROVED FOR PUBLIC
RELEASE AND SALE; ITS DISTRIBUTION IS UNLIMITED

D D C
JUL 17 1967
B
30

BLANK PAGES
IN THIS
DOCUMENT
WERE NOT
FILMED

Air Force Report No.
SSD-TR-67-95

Aerospace Report No.
TR-1001(2240-20)-11

MICROWAVE BREAKDOWN OF THE REENTRY BOUNDARY LAYER

Prepared by

W. P. Thompson, M. Epstein, and C. J. Lenander
Aerodynamics and Propulsion Research Laboratory

Laboratories Division
Laboratory Operations
AEROSPACE CORPORATION

May 1967

Prepared for

BALLISTIC SYSTEMS AND SPACE SYSTEMS DIVISIONS
AIR FORCE SYSTEMS COMMAND
LOS ANGELES AIR FORCE STATION
Los Angeles, California

This Document Has Been Approved For Public Release And Sale; Its Distribution Is Unlimited

FOREWORD

This report is published by the Aerospace Corporation, El Segundo, California, under Air Force Contract No. AF 04(695)-1001.

This report, which documents research carried out from January 1965 through December 1966, was submitted on 26 May 1967 to Captain John T. Allton, SSTRT, for review and approval.

The authors are indebted to G. C. Light of Aerospace Corporation and W. C. Taylor of Stanford Research Institute for making their data available before publication and for several helpful discussions.

Approved

R. A. Hartunian, Director
Aerodynamics and Propulsion
Research Laboratory

Publication of this report does not constitute Air Force approval of the report's findings or conclusions. It is published only for the exchange and stimulation of ideas.

John T. Allton
Captain, United States Air Force
Chief, Applied Mechanics Branch

ABSTRACT

Measurements of the microwave power required for breakdown have been made in a simulated reentry boundary layer flow. By establishing a fully developed laminar pipe flow between cold walls, fed by a subsonic arc jet, we have simulated the appropriate boundary layer temperature, density, electron concentration, and chemical composition profiles over an altitude range from 80 to 180 kft. Correlation with existing theoretical models and comparison with recent hot-air breakdown measurements in shock tubes are made. The effects of chemical composition of hot air and of typical ablation products and quenchants upon breakdown are briefly explored. It is found that significant reduction in breakdown power occurs in hot air flows and that present theoretical models do not predict the high altitude breakdown power within a factor of three or more.

CONTENTS

FOREWORD ii

ABSTRACT iii

I. INTRODUCTION 1

II. APPARATUS 5

III. PREDICTION OF BREAKDOWN 13

IV. RESULTS 17

V. DISCUSSION 21

VI. CONCLUSIONS 23

REFERENCES 25

FIGURES

1. Antenna Breakdown on Conical Reentry Vehicle 2

2. Arc Channel and Instrumentation Schematic 7

3. Test Section Schematic, Antenna Breakdown Experiment . . . 8

4. Arc-Channel Profiles in 1/2-in. Dimension at Typical Test Points 9

5. Boundary Layer Profiles on 8-deg Cone at 150 kft Altitude, x = 10 ft, V = 21.8 kft/sec, T_e = 800°K, T_w = 1000°K (Ref. 10) 10

6. Peak Boundary Layer Electron Density on Reentry Cones at x = 10 ft 11

7. Theoretical Breakdown Power Density in Hot and Cold Air, f = 9.4 GHz 14

8. Ionization Frequency for Hot and Cold Air 16

9. Experimental Breakdown Power Density in Arc-Channel and Shock Tube (Ref. 13) Compared with Theory of Figure 7 18

10. Experimental Breakdown Power as a Function of Pulse Length and Gas Composition 19

I. INTRODUCTION

The transmission of high power microwave energy through the boundary layer of a reentry vehicle arises in applications of radar map-matching systems and Electronic Countermeasures (ECM) radar jamming vehicle systems. In determining feasibility of such systems, a crucial parameter is the maximum power that can be transmitted before electrical breakdown of the flow field about the vehicle degrades the signal.

The phenomenology of microwave breakdown in cold air is well understood, and semiempirical theories (Refs. 1 and 2) permit accurate predictions of breakdown power in a uniform cold air environment. In conical vehicle reentry, three gaseous regimes enter the problem, as shown in Figure 1. The ambient free stream and the shock layer are at temperatures under 1000° for typical cone angles under 10 deg, and cold air theory can be used (Ref. 3). In the boundary layer, however, the presence of large concentrations of O, NO, e, and NO^+ change the basic gas composition, and the large density, temperature, and concentration gradients further complicate the problem. Our efforts are focused upon the effects of the gas thermochemistry, electron energy distribution, and electron collision phenomena upon the breakdown process and upon the power subsequently transmitted.

When ionized gas flows into the high-field region over an antenna aperture, the electrons are heated rapidly to an average energy of several eV. Inelastic collisions of the hot electrons with heavy particles may result in further ionization or in electron energy loss or capture. As a result, the electron density may either grow or decay during the particle transit time through the high power beam, depending upon the electromagnetic field strength, the details of the electron energy distribution function, and the inelastic collision cross sections of the various gas species. Neither the cross sections nor distribution function are well known, and one theoretical study is being carried out to improve our knowledge of these parameters (Refs. 4 and 5). A second theoretical study is the calculation of the propagation

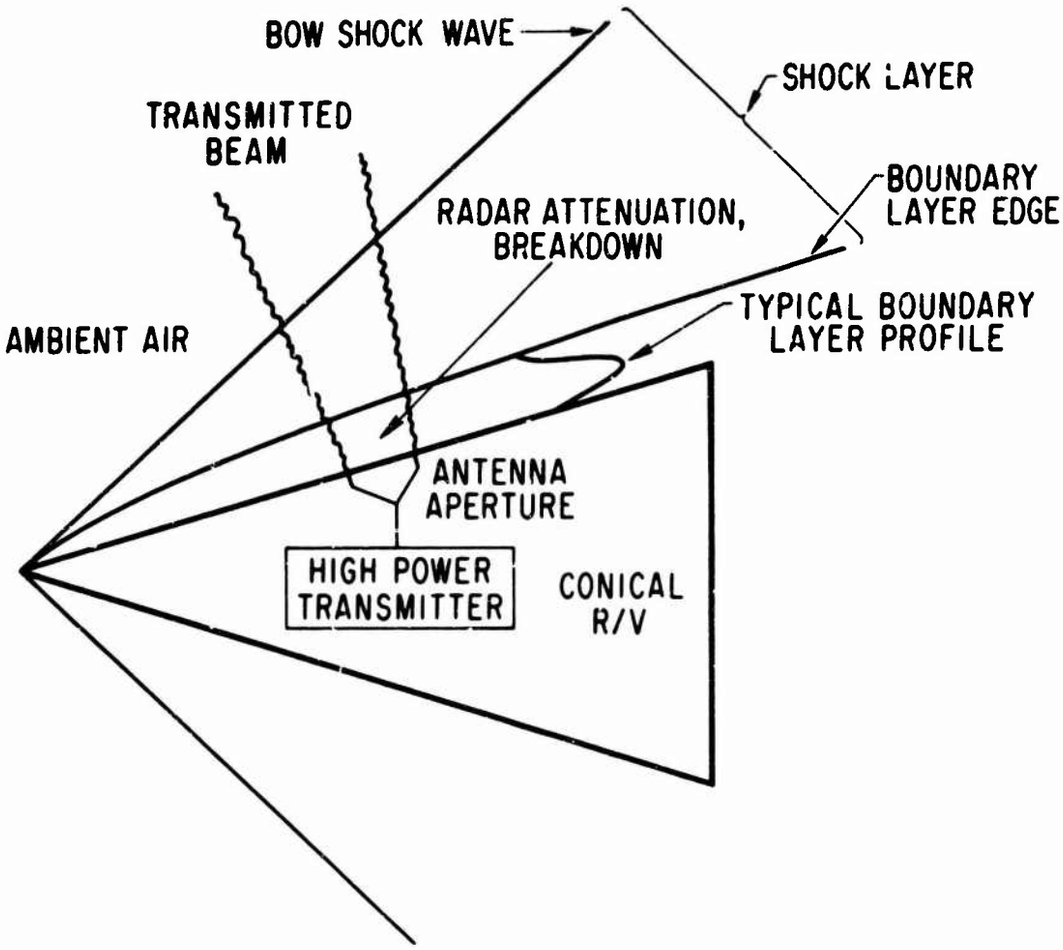

Figure 1. Antenna Breakdown on Conical Reentry Vehicle

of EM waves through the inhomogeneous and time-varying plasma boundary layer (Ref. 6). The spatial variation in the electron density and momentum transfer collision frequency will seriously affect the power transmission, and in addition there are strong nonlinear effects (Ref. 7) of varying field strength upon plasma conductivity that render a complete solution extremely difficult.

In view of the large uncertainties and extreme difficulties inherent in the theoretical analysis of breakdown, an experimental approach has been developed having two major aims: The first, to simulate in the laboratory the important features of the nonuniform high temperature boundary layer and to determine empirically the incident power levels that will cause antenna breakdown; the second, to identify the major collision processes affecting breakdown by varying gas composition and temperature, so that these processes may be studied individually in more detail.

II. APPARATUS

The experimental arrangement is shown in Figures 2 and 3. Hot air from our 200 kW subsonic arc jet flows between parallel walls of a channel, producing a highly peaked temperature and concentration profile that simulates the reentry boundary layer (Ref. 8). The temperature and pressure levels that can be achieved cover equivalent altitude ranges from 80 to 180 kft for typical reentry vehicle velocities and trajectories. The thickness was chosen to approximate 150 kft altitude.

The transmission and reflection of high power x-band (3 cm) radiation by the simulated boundary layer are measured to determine the combination of power level and the interaction time between the ionized gas and the electromagnetic beam, which results in breakdown.

Arc diagnostics (Ref. 8) provide measurements of average gas temperature and electron density. During each arc run, the average enthalpy of the gas at the test section location is determined by a total heat balance on the downstream portion of the channel. Total pressure profiles are obtained with a traversing small-diameter, water-cooled pitot tube. Profiles of electron number density are made using stagnation point Langmuir probes. Both traversing probes and fixed rake measurements are utilized. A sliding interchangeable test section makes possible both long time heat balance and short duration uncooled probing or microwave diagnostics (Ref. 9) during a single arc run. The measured channel profiles at a typical test point are shown in Figure 4, and typical reentry cone profiles (Ref. 10) are shown in Figures 5 and 6. The simulation of peak temperature, electron concentration, and qualitative profile shape is quite good.

For the diagnosis of breakdown, a slot aperture (WR 112 waveguide) was used with a 1/2 wavelength quartz window. High power radiation at 9.4 GHz was analyzed for transmission and reflection coefficients, and thus for n_e during the breakdown process. (Nonlinear propagation was not taken into account, so these n_e values are of qualitative value only.) A low power

diagnostic beam at 9.2 GHz, isolated from the high power by 70 dB filters, was used to determine average n_e before application of the high power pulse. Values of 10^{10} to 5×10^{11} cm^{-3} were typical.

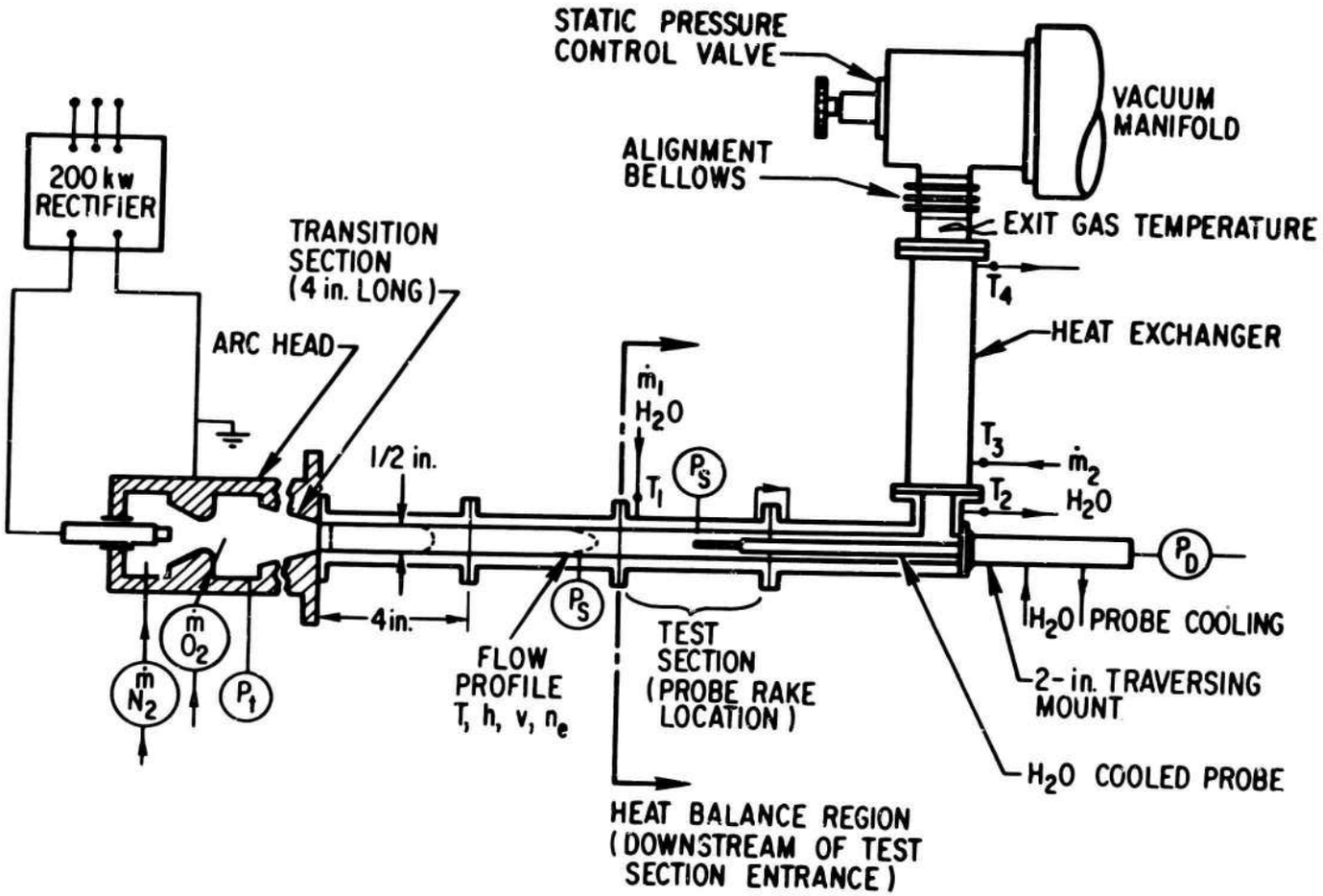

Figure 2. Arc Channel and Instrumentation Schematic

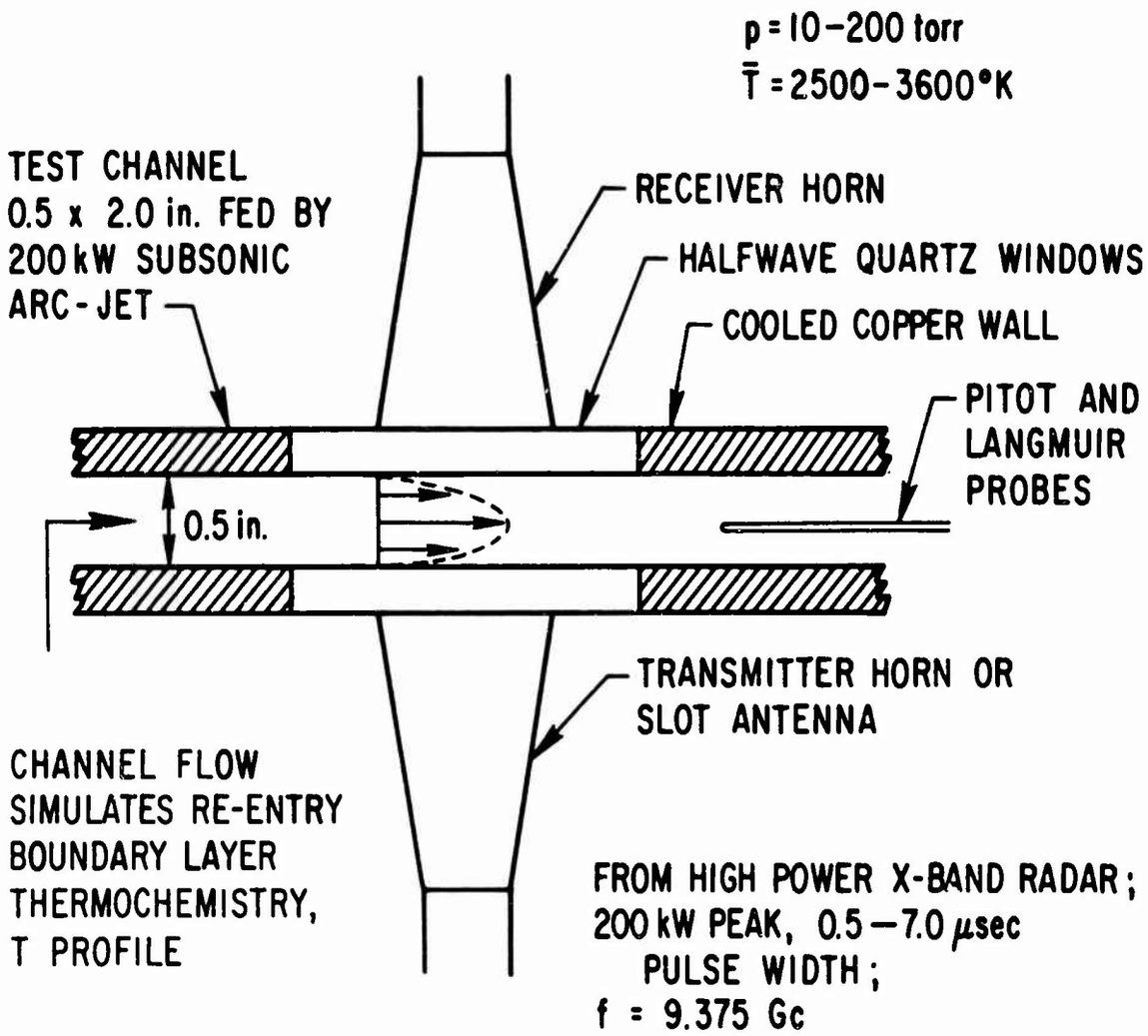

Figure 3. Test Section Schematic, Antenna Breakdown Experiment

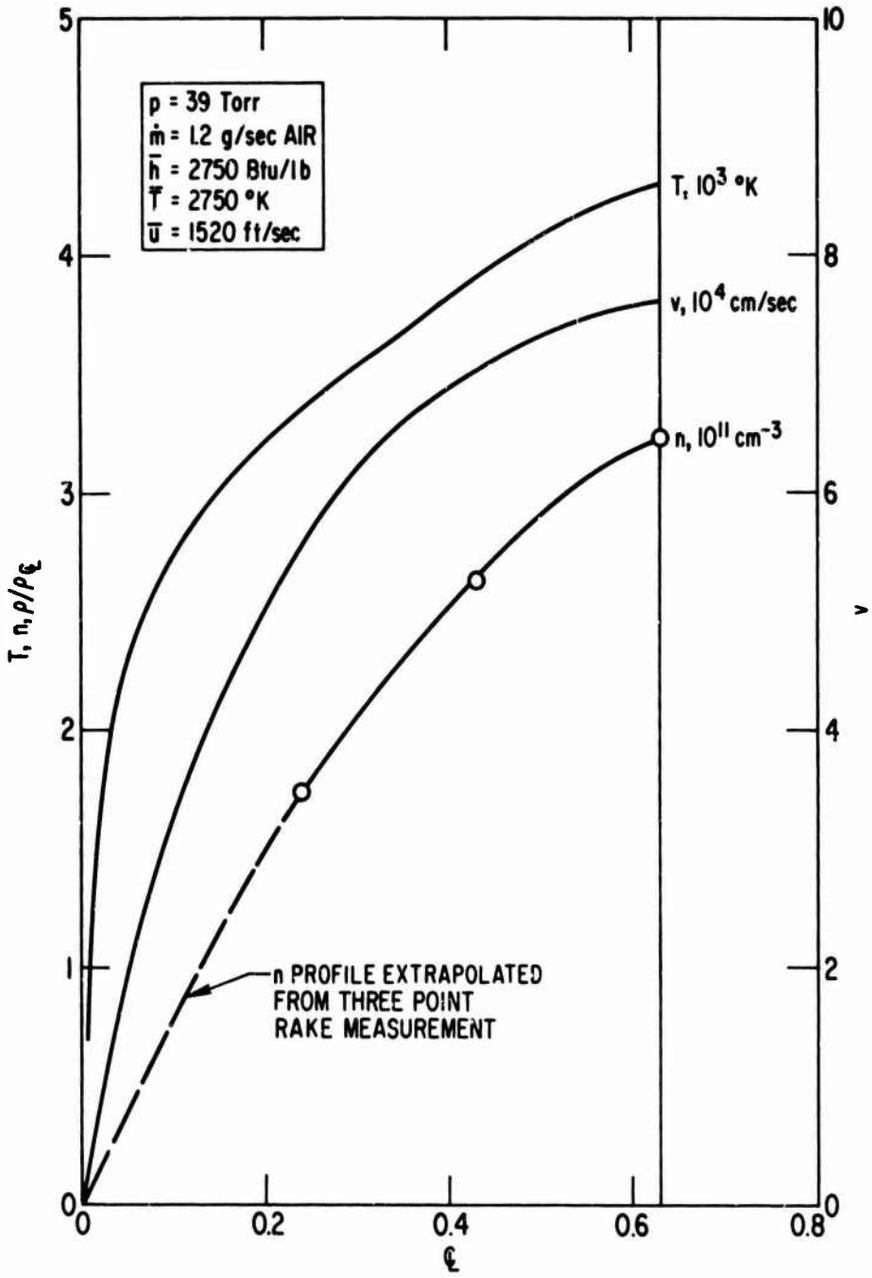

Figure 4. Arc-Channel Profiles in 1/2-in. Dimension at Typical Test Points

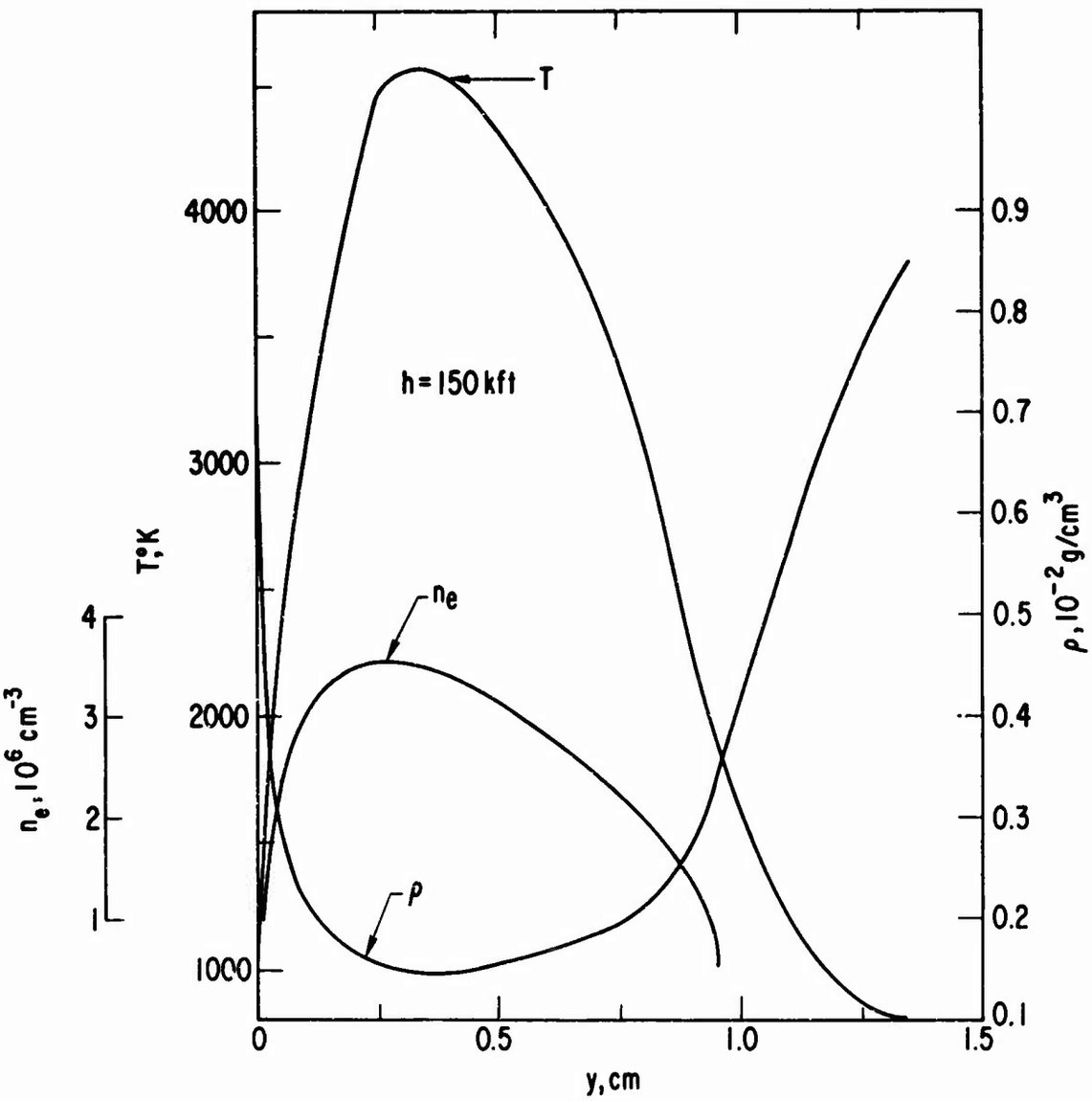

Figure 5. Boundary Layer Profiles on 8-deg Cone at 150 kft Altitude, x = 10 ft, V = 21.8 kft/sec, $T_e = 800°K$, $T_w = 1000°K$ (Ref. 10)

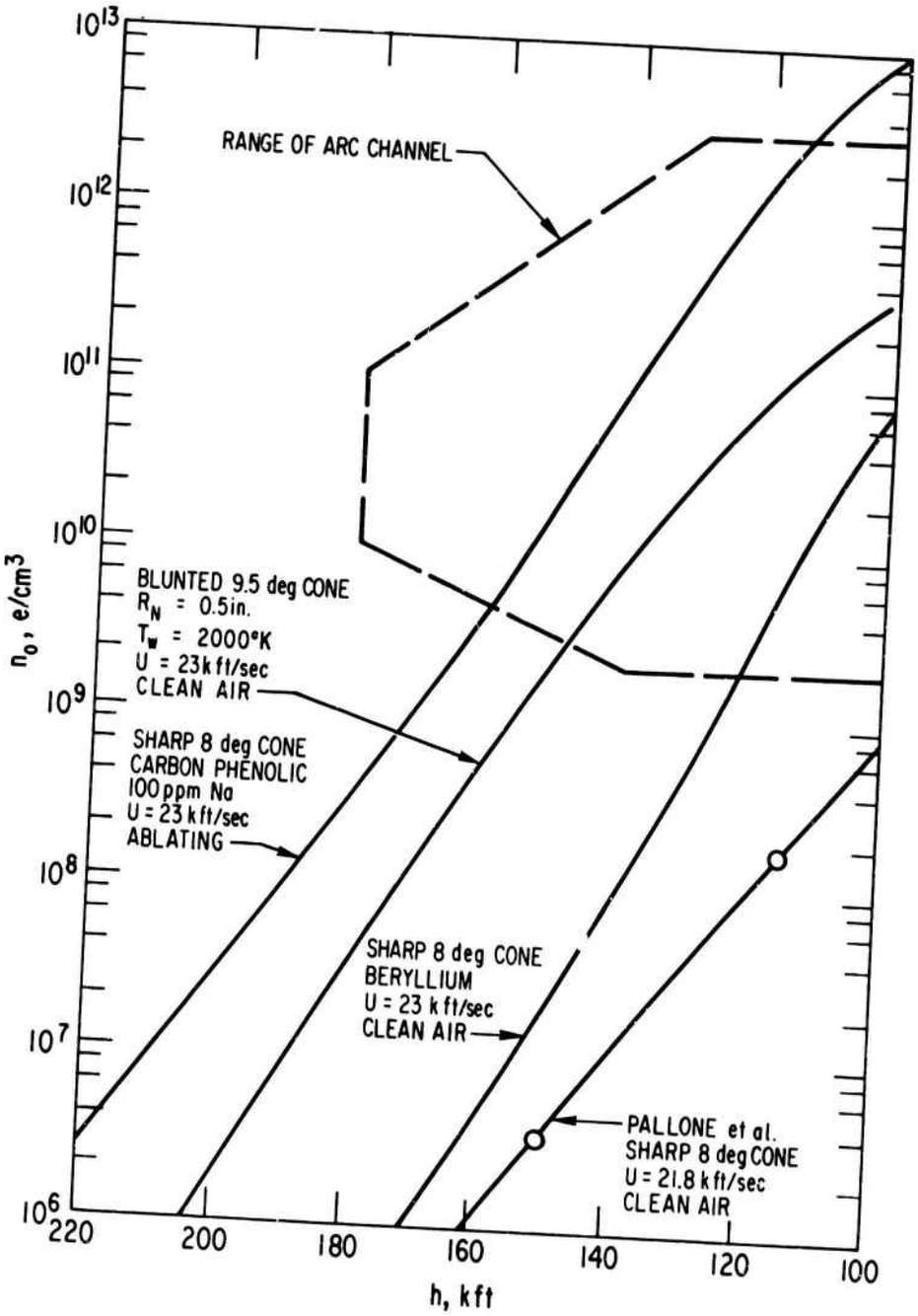

Figure 6. Peak Boundary Layer Electron Density on Reentry Cones at x = 10 ft

PRECEDING
PAGE BLANK

III. PREDICTION OF BREAKDOWN

The electron conservation equation in high electric fields is (Refs. 2 and 11)

$$\frac{dn}{dt} = \left(\nu_i - \nu_a - \frac{D}{\Lambda^2}\right)n$$

where ν_i, ν_a are ionization and attachment frequencies, D is the diffusion coefficient, and Λ is the characteristic diffusion length for the geometry chosen. If we assume that breakdown occurs at time τ(= pulse length) when the electron density n just reaches the critical density n_c for the applied signal frequency, then

$$\frac{(\nu_i - \nu_a)}{p} = \frac{Dp}{(p\Lambda)^2} + \frac{\ln(n_c/n_o)}{p\tau}$$

For the hot air case, wherever p appears we understand $p = 760\ \rho/\rho_o$ (ρ_o is sea level density). We employ the value $\Lambda = b/2\pi$ where b is the narrow slot aperture dimension[2], and assume $(Dp)_{free} = 1.6 \times 10^6$ cm^2 torr/sec for $n < 10^6$ cm^{-3}, and $(Dp)_{ambipolar} = 4 \times 10^4$ for $n > 10^6$ cm^{-3}. We set $n_c = 1.2 \times 10^{12}$ cm^{-3}.

The predictions of breakdown power as a function of density for a WR 112 waveguide aperture in free diffusion ($n_o = 10^3$) cases for $\tau = 0.5$, 5 sec are shown in Figure 7, where S is power density given by $S = E^2$ (V/cm)^2/377 ohm in free space. We have used values of $(\nu_i - \nu_a)$ from Ref. 12 (taken in cold air), which are shown in Figure 8 as a function of E_e/p. E_e is the rms effective field, given by $E_e^2 = E^2_{rms}(1 + \omega^2/\nu_c^2)^{-1}$ where E is the actual field, ω the signal radian frequency, and ν_c the collision frequency. We have used the commonly accepted value (Ref. 1) $\nu_c = 5.3 \times 10^9$ ~ for average electron energies of 5 eV in the high field case.

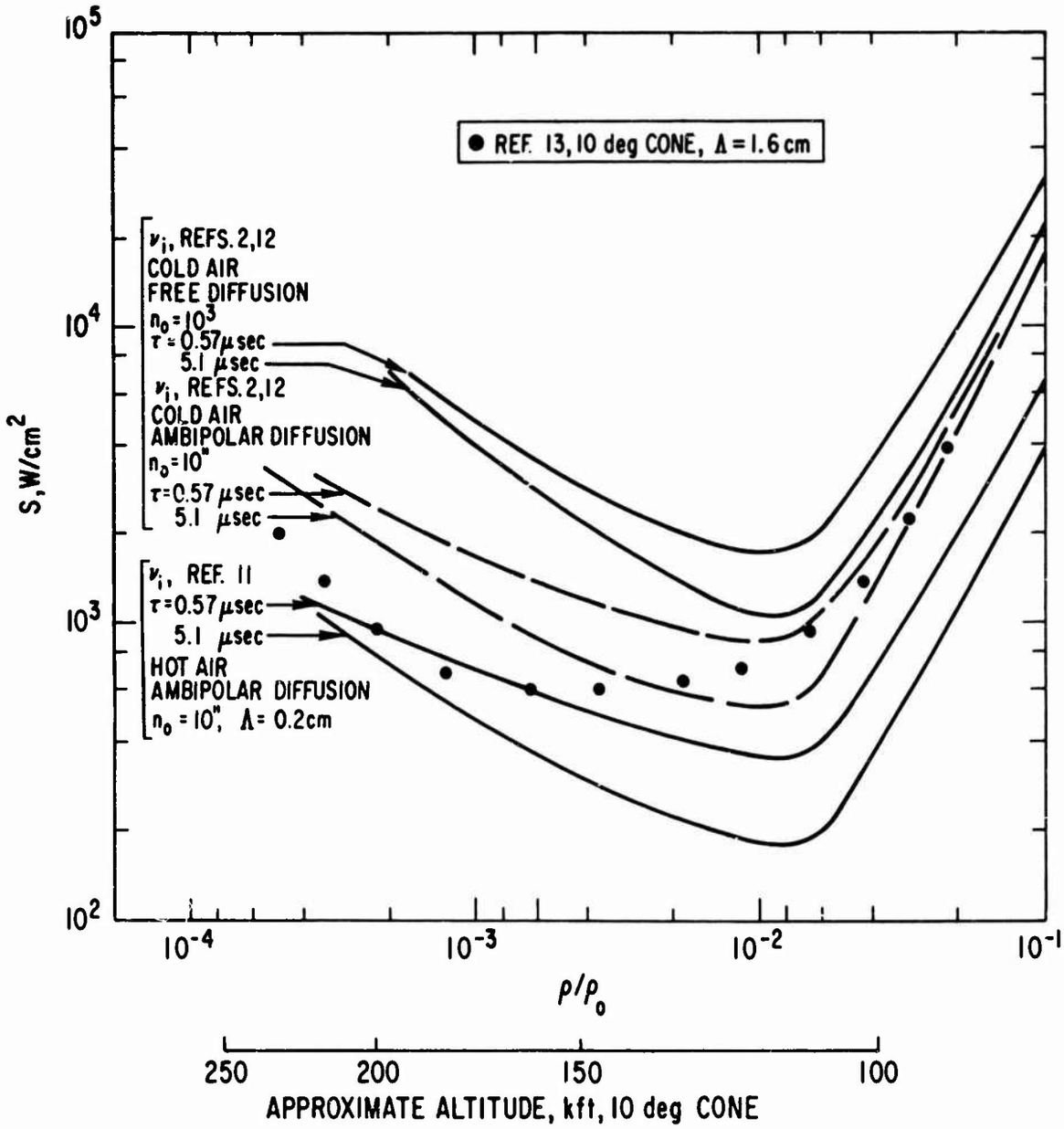

Figure 7. Theoretical Breakdown Power Density in Hot and Cold Air, f = 9.4 GHz

Recently Chown et al. (Ref. 11) have measured ν_i in air at 3000°K, finding a greatly increased ν_i, also shown in Figure 8. Hot air breakdown predictions using this curve are included on Figure 7. For comparison purposes, Reilly's prediction (Ref. 3), using cold air ($\nu_i - \nu_a$) with ambipolar diffusion and $\Lambda = 1/2$ wavelength, is plotted for a 10-deg cone. Note that although a significant reduction in power handling capability of the aperture results from the presence of a plasma (ambipolar diffusion) and an even larger reduction occurs when the hot air ν_i curve is used, a minimum in breakdown power always occurs near $\rho/\rho_o = 10^{-2}$. This minimum is due to the effects of ν_c in reducing the effective field and to diffusion losses. Note also that approximately a 3 dB difference in breakdown powers obtains for a 0.5 μsec compared to 5.1 μsec pulse length.

This analysis predicts the onset of breakdown. Several other criteria based on Epstein's calculations of transmission (Ref. 4) give almost identical results, whether we use $n = n_c$, or a 3 dB reduction in transmission coefficient, or a 3 dB reduction in overall integrated pulse power as the criterion.

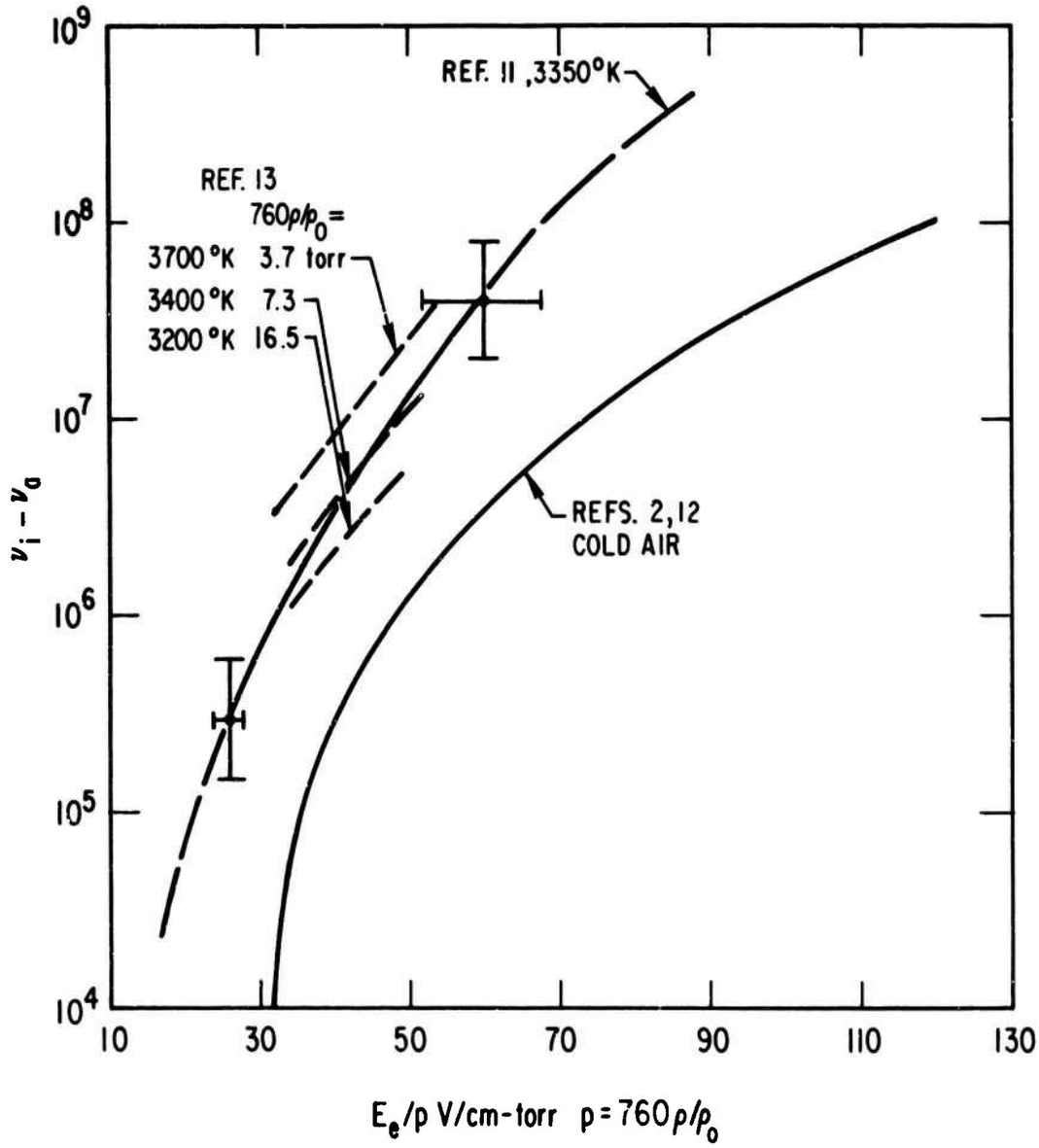

Figure 8. Ionization Frequency for Hot and Cold Air

IV. RESULTS

The breakdown properties of the channel flow were first determined in cold air and then in hot air over a range of pressures from 15 to 150 torr, at peak channel temperatures from 3000 to 5000°K in air. The results for 5 μsec pulse length are shown in Figure 9 and compared with the theoretical curves using the appropriate ν_i and diffusion terms. The centerline channel density ρ/ρ_o is used to correlate the data. The results scatter over a fairly wide range. The highest temperature runs tend to have the lowest breakdown power; this could be due to higher n_e as well as T. Calculations similar to those in Figure 7 indicate, however, that the n_e effect is small, and that the variation in gas temperature is the primary cause of the scatter. The arc is also found to fluctuate considerably during a given run and from day to day. One result is immediately apparent; the minimum in breakdown power predicted in Figure 7 does not occur, and the lowest power is still not achieved at 180 kft, the highest simulated altitude achieved.

Effects of pulse length and chemical composition are shown in Figure 10. The expected 2 to 3 dB difference in breakdown power between 0.5 and 3 μsec pulses is clearly seen. (Beyond 3 μsec, breakdown power is insensitive to pulse length, both in theory and experiment.)

Runs in pure nitrogen were made; these gave breakdown results identical with those for air. Then 20 percent NO by volume was added in the plenum, and two effects were observed: The electron density before high power application is enhanced by a factor of 2 to 3, but the breakdown power is reduced at most by 20 percent. Thus it would appear that the presence of O_2 or O or NO is not critical in determining the breakdown properties of high temperature air, and that the major interest should be in the high temperature electron - N_2 collisions. (At ~3000°K, air contains about 5 to 10 percent NO and 20 to 40 percent O by volume, so the addition or removal of O_2 or NO is a major change.)

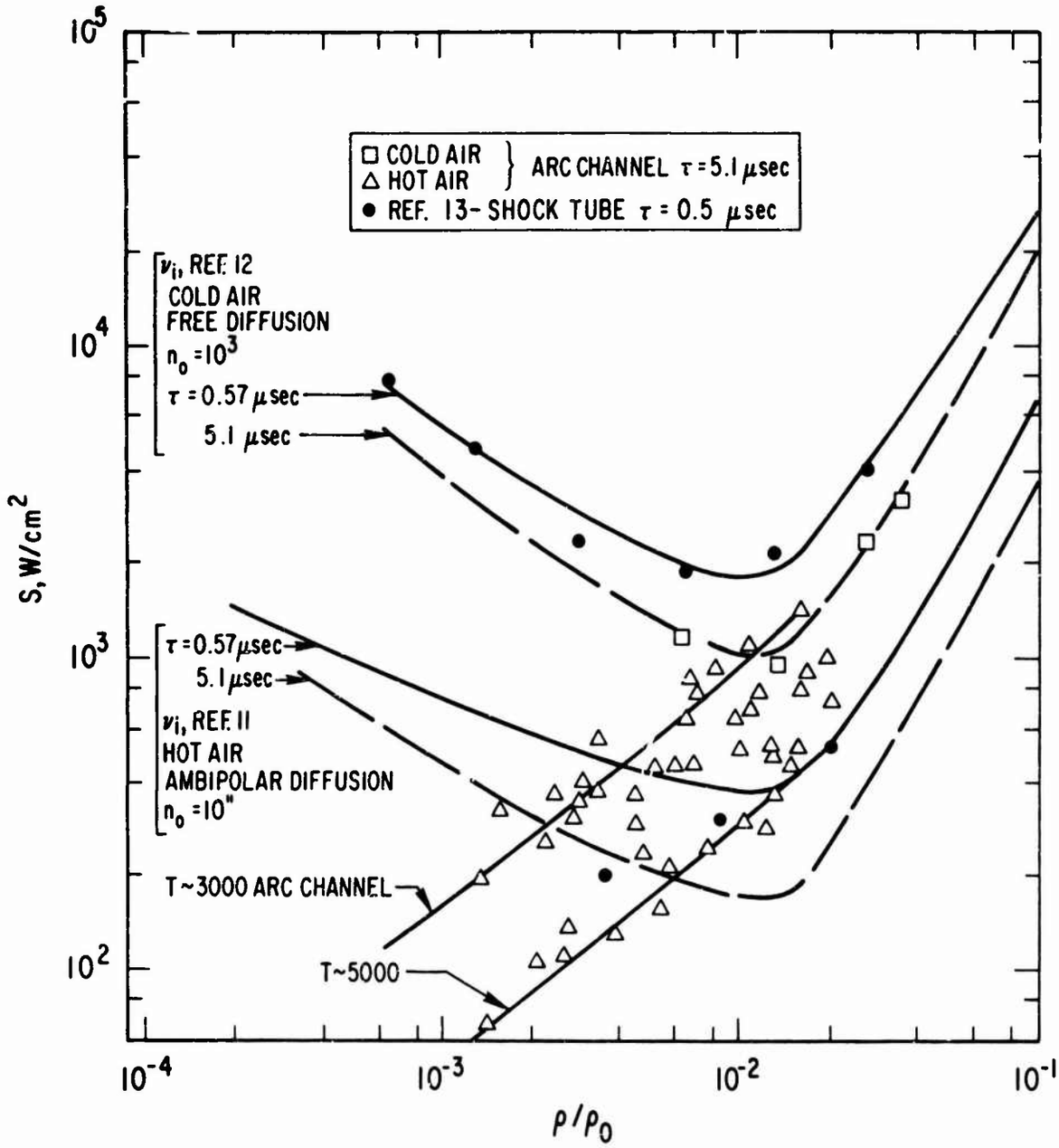

Figure 9. Experimental Breakdown Power Density in Arc-Channel and Shock Tube (Ref. 13) Compared with Theory of Figure 7

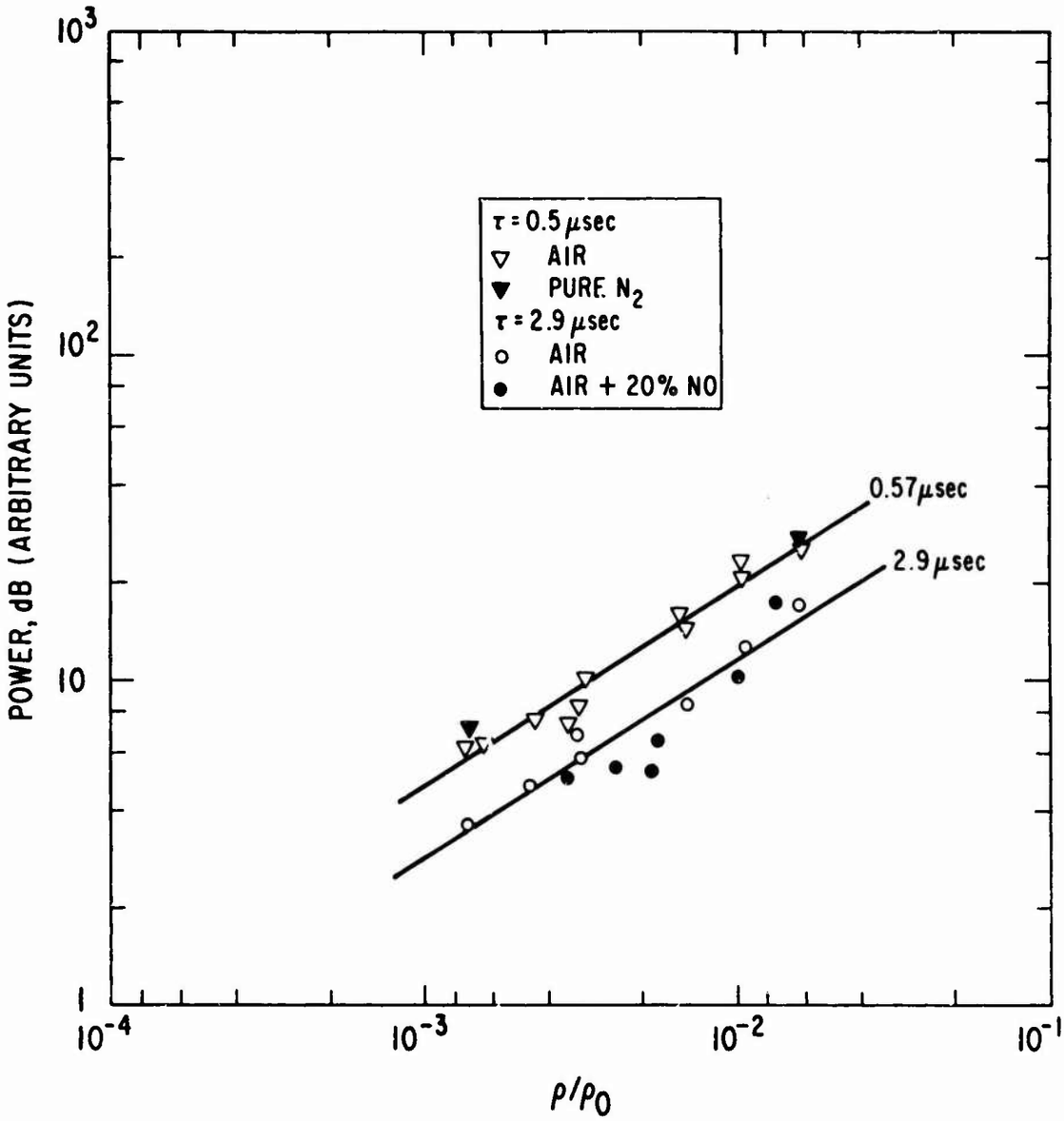

Figure 10. Experimental Breakdown Power as a Function of Pulse Length and Gas Composition

The effects of ablation products and quenchants were briefly surveyed. Twenty percent by volume of CO (carbon ablation), CF_4 (teflon ablation), and SF_6 (electrophilic quenchant) were added, with the following results:

CO : No effect on n_e or breakdown power.

CF_4: Reduction of n_e by a factor of 2 to 3. Increase in breakdown power by a factor of 3. Brilliant blue radiation.

SF_6: Reduction of n_e by a factor of 3 or more. Increase in breakdown power of a factor of 2. Brilliant yellow-green radiation.

The reduction in ambient n_e is due primarily to temperature reduction, since CF_4 and SF_6 will absorb large amounts of thermal energy in vibration and rotation. The additional electron attachment that is likely for both F and CF_n, SF_n radicals is a probable major cause of the increased power required for breakdown. It is especially interesting that CF_4, which has less cooling effect than SF_6 and is harder to dissociate, has the largest effect on breakdown. It suggests the use of fluorocarbon heat shield materials as a specific aid in the prevention of breakdown. The radiation observed from the air stream when CF_4 and SF_6 are added is mentioned in order to caution wake-quench enthusiasts to be certain that optical observables are not enhanced by quenchants.

V. DISCUSSION

The results of Figure 9 show that in the worst case, the older cold air theories overpredict breakdown power by a factor of 10 to 20 and the newer hot air predictions still differ from our data by a factor of 3 to 6. Since these data are obtained in a nonuniform boundary layer, the choice of a density for correlation is nontrivial. We have chosen the centerline density, assuming that breakdown first occurs in the hottest, least dense gas. This is borne out by recent calculations that extend the theory of Ref. 6 to nonuniform slabs, using the profiles of Figure 4.

Recent measurements by Light (Ref. 13) of breakdown in a uniform shock tube plasma generally confirm the data of Taylor (Ref. 11). However, two significant results should be noted: Light's results for cold air and 3400° air are plotted on Figure 9. They show good agreement with the theory based on Taylor's ν_i at high density, but show the same progressive deviation at low density as do our data. When Light's data are interpreted to yield an ionization frequency ν_i, a temperature dependence of ν_i in hot air is found, as shown on Figure 8. For the theories, the power density S is related to the assumed free-space plane wave field by S watt/cm^2 = E^2(V/cm)^2/377 ohm.

Further theoretical studies are being pursued in two areas. By using the best available collision cross sections (Ref. 4), and solving the Boltzmann equation numerically (Ref. 5) using a computer program provided us by Carlton and Megill of NBS, we hope to arrive at a detailed understanding of the ionization and loss processes in high fields. Significant progress has been made in developing Figure 8 for cold air from first principles, and the extension to hot air is in progress. In the second theoretical attack, more extensive calculations of EM wave propagation and breakdown in nonuniform plasma slabs will be performed, in order to establish more clearly the effects of T, ρ, and n_e profiles upon breakdown. The effects of convection and near-field of the slot aperture will also be explicitly included. We note that convection has so far been ignored and is not simulated by our subsonic

channel flow. We have accounted for the first-order effects of convection in simulating the flight performance by varying the pulse length to represent varying flow times across the aperture.

Two additional qualitative results should be mentioned. The measured electron density in the plasma slab at breakdown was found to vary from $n/n_c = 0.5$ at high pressure to $n/n_c = 0.9$ at low pressure. Secondly, the net power that was transmitted as incident power was increased beyond the breakdown threshold was found to reach an absolute maximum and then to decrease, in accord with the predictions of Ref. 4. Maximum occurs at about twice the incident power required for breakdown threshold, yielding transmitted power about equal to the threshold value.

VI. CONCLUSIONS

We have determined the power required for electrical breakdown of the simulated reentry boundary layer, and find that it agrees qualitatively with current theory at simulated altitudes below 130 kft. The empirical breakdown threshold drops progressively below the predicted values at higher altitudes up to 180 kft, and fails to show any sign of a minimum power level. By adding and removing O_2 and NO from the gas flow, we have established that electron-N_2 collisions must dominate the behavior of hot air. Chemical techniques, particularly CF_4 addition, show some promise for the alleviation of breakdown. The elucidation of the reasons for the behavior of hot air and the extension of these measurements to even higher altitudes of interest in ECM applications are the areas that appear to require immediate further work.

REFERENCES

1. A. D. MacDonald, Microwave Breakdown in Gases, (John Wiley, New York, 1966).

2. J. B. Chown, "Study of Plasma-Induced Voltage Breakdown at Low Pressure," Stanford Research Institute, Menlo Park, California, Final Report, Contract AF33(600)41517 (July 1961).

3. J. P. Reilly, "Microwave Breakdown of the Air Around a Conical Reentry Vehicle," Avco-Everett Research Laboratory, Research Report 214 (April 1965).

4. C. J. Lenander, "Electron Collision Cross Sections in Air and the Effects of Elevated Gas Temperatures, Aerospace Corporation, El Segundo, California, TR-669(6240-20)-7 (July 1966).

5. N. P. Carleton and L. R. Megill, "Electron Energy Distribution in Slightly Ionized Air Under the Influence of Electric Magnetic Fields," Phys. Rev. 126, 2089 (1962).

6. M. Epstein, "Antenna Breakdown in a Hypersonic Reentry Environment," Aerospace Corporation, El Segundo, California, TDR-669(6240-20)-1 (September 1965).

7. M. Epstein, "Electromagnetic Wave Propagation in a Plasma With Nonlinear Electrical Conductivity," Phys. Fluids 5, 492 (1962).

8. K. E. Starner and D. J. Spencer, "An Arc Plasma Channel for Testing of Reentry Boundary Layer Instrumentation," Aerospace Corporation, El Segundo, California, TR-1001(2240-10)-5 (November 1966).

9. R. G. Jahn, "Microwave Probing of Ionized Gas Flows," Phys. Fluids 5, 678 (1962)

10. A. J. Pallone, J. A. Moore, and J. I. Erdos, "Nonequilibrium Nonsimilar Solutions of the Laminar Boundary Layer Equations," AIAA J. 2, 1760 (1964).

11. J. B. Chown, W. C. Taylor, and T. Morita, "Microwave Breakdown Technique for Measuring Ionization Rate of High-Temperature Gases in a Shock Tube," Stanford Research Institute, Menlo Park, California. Presented at IEEE/PGMTT, Palo Alto, California, May 16-18, 1966.

REFERENCES (Continued)

12. W. E. Scharfman and T. Morita, "Focused Microwave Technique for Measurement of the Ionization Rate and Collision Frequency," J. Appl. Phys. 35, 2016 (1964).

13. G. C. Light and E. C. Taylor, "Antenna Breakdown in High Temperature Air," Aerospace Corporation, El Segundo, California, TR-1001(2220-10)-3 (May 1967).

UNCLASSIFIED
Security Classification

DOCUMENT CONTROL DATA - R&D
(Security classification of title, body of abstract and indexing annotation must be entered when the overall report is classified)

1 ORIGINATING ACTIVITY *(Corporate author)* Aerospace Corporation El Segundo, California	2a REPORT SECURITY CLASSIFICATION Unclassified 2b GROUP

3 REPORT TITLE

Microwave Breakdown of the Reentry Boundary Layer

4 DESCRIPTIVE NOTES *(Type of report and inclusive dates)*

5 AUTHOR(S) *(Last name, first name, initial)*

Thompson, W. Paul, Epstein, Melvin, and Lenander, Carl J.

6 REPORT DATE May 1967	7a TOTAL NO OF PAGES 27	7b NO OF REFS 13
8a CONTRACT OR GRANT NO. AF 04(695)-1001 b PROJECT NO c d	9a ORIGINATOR'S REPORT NUMBER(S) TR-1001(2240-20)-11 9b OTHER REPORT NO(S) *(Any other numbers that may be assigned this report)* SSD-TR-67-95	

10 AVAILABILITY/LIMITATION NOTICES
This document has been approved for public release and sale; its distribution is unlimited.

11. SUPPLEMENTARY NOTES	12. SPONSORING MILITARY ACTIVITY Space Systems Division Air Force Systems Command United States Air Force

13 ABSTRACT

Measurements of the microwave power required for breakdown have been made in a simulated reentry boundary layer flow. By establishing a fully developed laminar pipe flow between cold walls, fed by a subsonic arc jet, we have simulated the appropriate boundary layer temperature, density, electron concentration, and chemical composition profiles over an altitude range from 80 to 180 kft. Correlation with existing theoretical models and comparison with recent hot-air breakdown measurements in shock tubes are made. The effects of chemical composition of hot air and of typical ablation products and quenchants upon breakdown are briefly explored. It is found that significant reduction in breakdown power occurs in hot air flows and that present theoretical models do not predict the high altitude breakdown power within a factor of three or more.

DD FORM 1473 (FACSIMILE)

UNCLASSIFIED
Security Classification

14

KEY WORDS

Antenna breakdown
Reentry physics
Plasma
Gaseous discharge
Boundary layer

Abstract (Continued)