AD658456

AFCRL-67-0406

Cruft Laboratory
Division of Engineering and Applied Physics
Harvard University Cambridge, Massachusetts

AN EXPERIMENTAL STUDY OF AN ELECTRICALLY THICK, TUBULAR, MONOPOLE ANTENNA DRIVEN BY A COAXIAL TRANSMISSION LINE

By
David C. Chang

June 1967

Distribution of this document is unlimited. It may be released to the Clearinghouse, Department of Commerce, for sale to the general public.

Scientific Report No. 19 (Series 3)

Contract AF19(628)-2406

Project 5635 · · Task 563502 · · Work Unit 56350201
Contract Monitor: Philipp Blacksmith–Microwave Physics Laboratory

National Science Foundation Grant GK-273

Prepared for
Air Force Cambridge Research Laboratories
Office of Aerospace Research
United States Air Force
Bedford, Massachusetts

CLEARINGHOUSE

D D C
RECEIVED
SEP 26 1967
C

46

AFCRL-67-0406

AN EXPERIMENTAL STUDY OF AN ELECTRICALLY THICK, TUBULAR, MONOPOLE ANTENNA DRIVEN BY A COAXIAL TRANSMISSION LINE

By

David C. Chang

Cruft Laboratory
Division of Engineering and Applied Physics
Harvard University Cambridge, Massachusetts

Contract AF19(628)-2406
Project No. 5635
Task No. 563502
Work Unit No. 56350201

Contract Monitor
Philipp Blacksmith
Microwave Physics Laboratory

and

National Science Foundation Grant No. GK-273

Scientific Report No. 19 (Series 3)

Distribution of this document is unlimited. It may be released to the Clearinghouse, Department of Commerce, for sale to the general public.

June 1967

Prepared for

Air Force Cambridge Research Laboratories
Office of Aerospace Research
United States Air Force
Bedford, Massachusetts

AN EXPERIMENTAL STUDY OF AN ELECTRICALLY THICK, TUBULAR, MONOPOLE ANTENNA DRIVEN BY A COAXIAL TRANSMISSION LINE

By

David C. Chang

Cruft Laboratory
Division of Engineering and Applied Physics
Harvard University Cambridge, Massachusetts

ABSTRACT

Current distribution and input admittance of an electrically thick, tubular, monopole antenna driven by a coaxial transmission over a ground plane has been investigated and compared with theoretical results. When the circumference of the antenna is comparable to a free-space wavelength, this experiment verifies that the theoretical model of a tubular dipole antenna with a delta-function excitation only on the outside surface describes the experimental situation more properly than the conventional model of a delta-function excitation on both outside and inside surfaces of the antenna.

I. INTRODUCTION

In the theoretical study of an electrically thick cylindrical antenna [1], it is already known that, except for the quadrature part of the current distribution near the driving point, results obtained from the two different excitations become significantly different only when the circumference of the antenna is comparable to a free-space wavelength. However, in previous experimental studies done by S. Holly [2] and by S. Prasad [3], no measurements have been reported for antennas with radii in this range. The experimental difficulty comes primarily from the existance of higher modes in the coaxial-line, either due to the method of excitation, or due to the irregularities of the coaxial-line structure (for instance, the open slot used in the input admittance measurements). Therefore, it is the purpose of this investigation to design and to study the characteristics of a tubular, coaxial-line-driven antenna which has a circumference comparable to a free-space wavelength. From a comparison between the experimental results and the numerical solutions obtained for the mathematical models, it should be possible to explain why the conventional assumption of a two-sided delta-function generator cannot be used to represent the experimentally realizable model of a coaxial-line-driven antenna.

II. ANTENNA STRUCTURE

A. Components:

Basically, the antenna-coaxial-line system consists of three concentric tubes. Of these three tubes, only the middle one is movable and is used as the antenna. The other two are fixed to the ground plane in order to form two concentric coaxial lines. The sizes of these tubes depend largely upon what is available in the commercial market. In the operating frequency range of 400-900 MHz, in order to obtain an antenna with circumference equal to a free-space wavelength, the outer diameter of the middle tube should be 5-7 inches. Once the size of this tube is chosen, the sizes of the other two determine the dimensions of the gaps, and consequently, the characteristic impedances of the two coaxial-lines. Theoretically, in order to have a better comparison with the model of delta-function excitation, the gap should be as small as possible. However, the characteristic impedances of the fundamental coaxial-line mode will then become too small to deliver any significant amount of signal. Furthermore, any imperfection in the roundness or any bend along these tubes will severely affect the uniformity of the gap. A compromise value of $\frac{1}{2}$" was therefore, chosen for the width of the gaps. As a consequence, the set of brass tubings chosen is tabulated in Table 1. Here, the length of each tube listed in Table 1 is chosen mainly from a consideration of the space available. As will become clear in the course of the description of the measuring line, the length of tube B (i. e. middle tube) cannot be longer than half the ceiling height of the Gordon McKay Lab's penthouse where the experiment is performed. This then will give a length of 54" for tube B. The length of the other two tubes can be so chosen that, at the lowest operating frequency (400 MHz), the length

	O. D.	I. D.	Length
tube A	7"	$6\frac{3}{4}$"	38"
tube B	6"	$5\frac{3}{4}$"	54"
tube C	5"	$4\frac{7}{8}$"	38"

Characteristic impedance of coaxial-line 1 = 7.05 ohm
(tube A & tube B)
Characteristic impedance of coaxial-line 2 = 8.47 ohm
(tube B & tube C)

Table 1. Dimensions of the Antenna Assembly

of the antenna (which equals the difference in length between tube A and B,) will be at least a half wavelength long. This will then give a length of 38".

Note that the mechanical tolerances in the roundness and the straightness of the three tubes are not specified in Table 1. The commercially available brass tubes in these sizes are not intended for precision usage. On the average, they are recorded to have a 0.01"-0.02" error in roundness, and have about a 0.04" bend over a length of 40". Unfortunately, with the existing facilities in the Machine Shop at Gordon McKay Lab., no significant improvement could be made.

B. Assembly:

The whole assembly of the antenna-coaxial-line system is mounted under a large aluminum ground screen which has the dimensions 24'x48' and is used to simulate an infinitely large, perfectly conducting ground plane (Fig. 1). The screen is $\frac{1}{8}$" in thickness and is mounted on a number of steel supports. In the original design of this ground plane, a circular

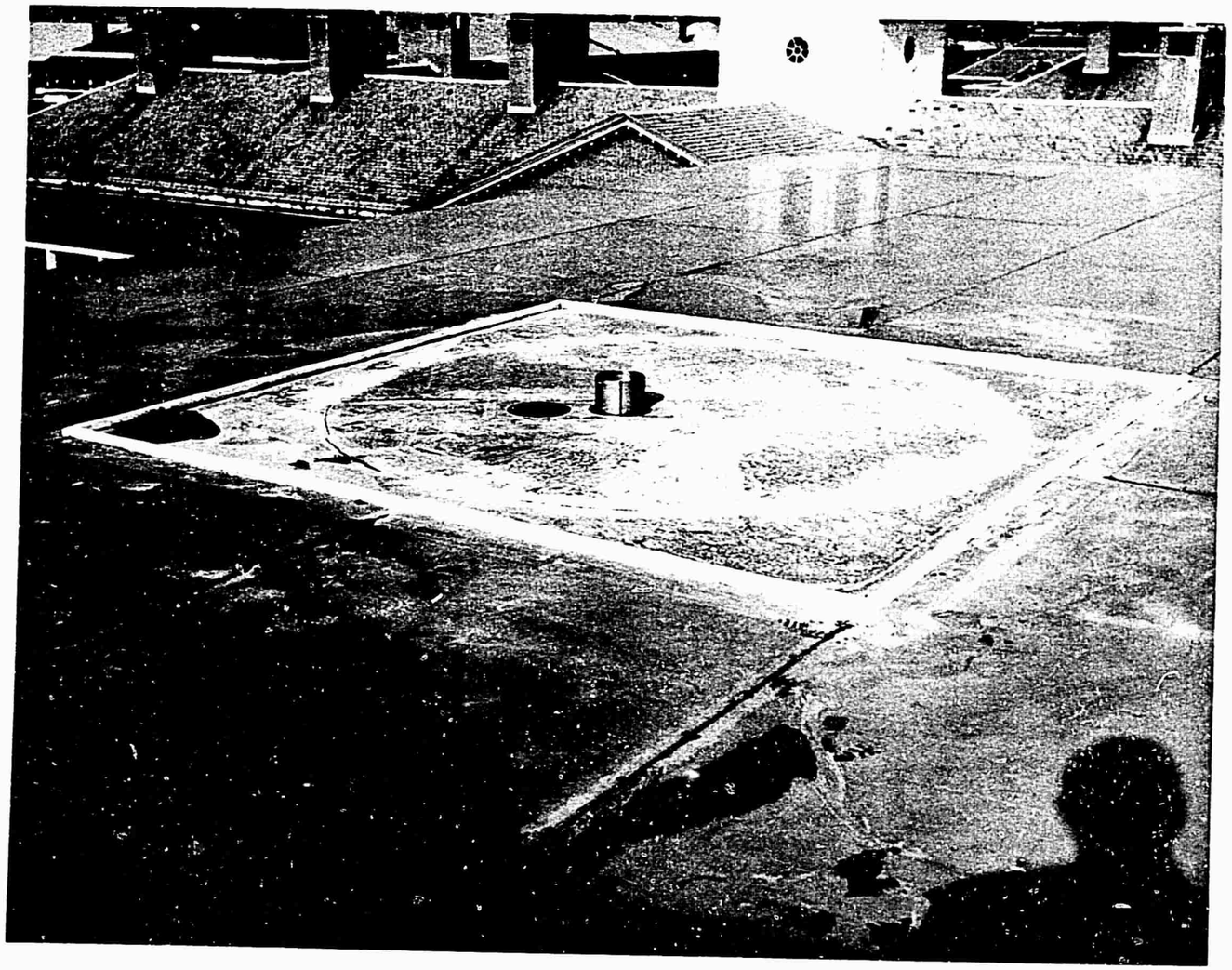

FIG. 1 LOCATION OF THE ANTENNA AND THE MEASURING PROBES

hole 82" in diameter was made to accommodate a turntable of the same size, which in turn, is made up of five sections of $\frac{5}{16}$"-thick aluminum. The center piece of the turntable has a hole $7\frac{3}{4}$" in diameter in order to allow access to the outside tube (i. e. tube A) of the antenna-coaxial-line system. However, since no far-field pattern is to be measured in this investigation, there is no need to rotate the turntable. Therefore, all slots were taped over with Brityl Acetath to improve the contact. Beneath the turntable, a set of eight roller bearings are mounted on welded steel struts in order to support the turntable. In addition, there are also four vertical steel pipes mounted under the center portion of the turntable (Fig. 4). A number of other pipes were clamped to these four main ones in order to make the structure more solid, and to serve as the supporting framework for the antenna assembly, which is indicated in the sketch Fig. 3, and is best seen in the photograph Fig. 4.

On the top of tube A, a ring holder is welded. It has an O. D. of 7.74" and thus fits right into the hole in the turntable. The base of the holder, however, is extended 1" wider so that four small clamps can be placed around the base to hold tube A against the turntable. On the top of the holder, a $\frac{1}{2}$" wide and $\frac{1}{8}$" deep circular piece is cut away (Fig. 2) to accommodate a thin ring of the same dimensions. It can be replaced by a short-circuiting ring in the case of short-circuit measurements.

In order to hold tube B against tube A and at the same time, to be able to move up and down, a large aluminum frame is screwed onto two brass shoes which in turn, are welded onto the outside surface of tube A, 32" and 21" away from the ground plane. A section of steel pipe is then inserted underneath the base of the frame, and is clamped together with the

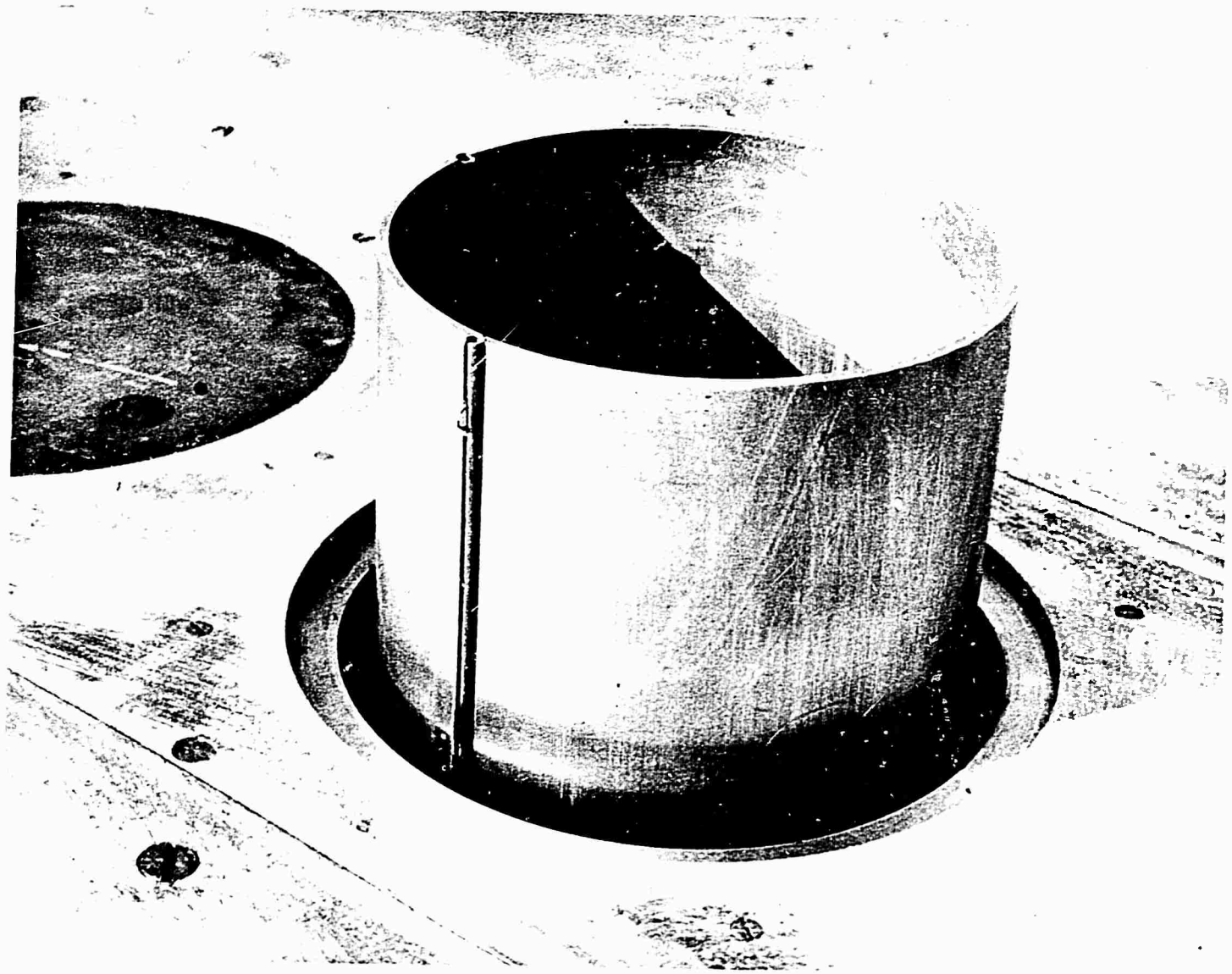

FIG. 2 CLOSED-UP LOOK OF THE ANTENNA AND THE MEASURING PROBES

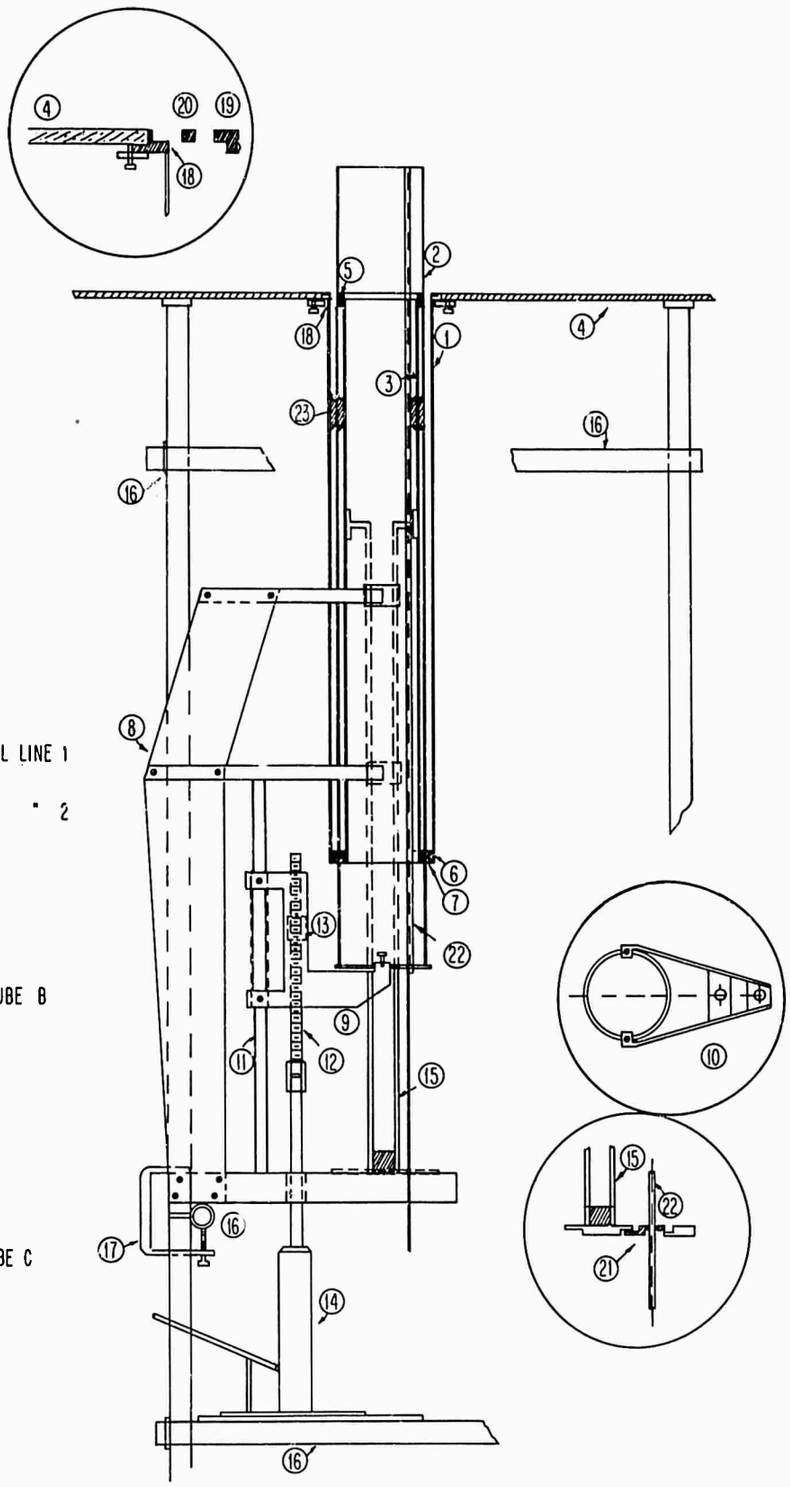

① TUBE A } COAXIAL LINE 1
② TUBE B (ANTENNA) } COAXIAL LINE 1
③ TUBE C } " " 2
④ TURNTABLE
⑤ SHORT-CIRCUITING RING
⑥ " " "
⑦ " " "
⑧ SUPPORTING FRAME FOR TUBE B
⑨ A-SHAPED HOOK
⑩ TOP VIEW OF ⑨
⑪ SLIDING ROD
⑫ SCREWING ROD
⑬ TURNING KNOB
⑭ HYDRAULIC JACK
⑮ SUPPORTING RODS FOR TUBE C
⑯ STEEL PIPES
⑰ CLAMPS
⑱ RING HOLDER
⑲ SHORT CIRCUIT RING
⑳ THIN SLICE
㉑ ROTATING DISC
㉒ MEASURING LINE
㉓ STYROFOAM RINGS

FIG. 3 SKETCH OF THE ANTENNA-COAXIAL LINE ASSEMBLY

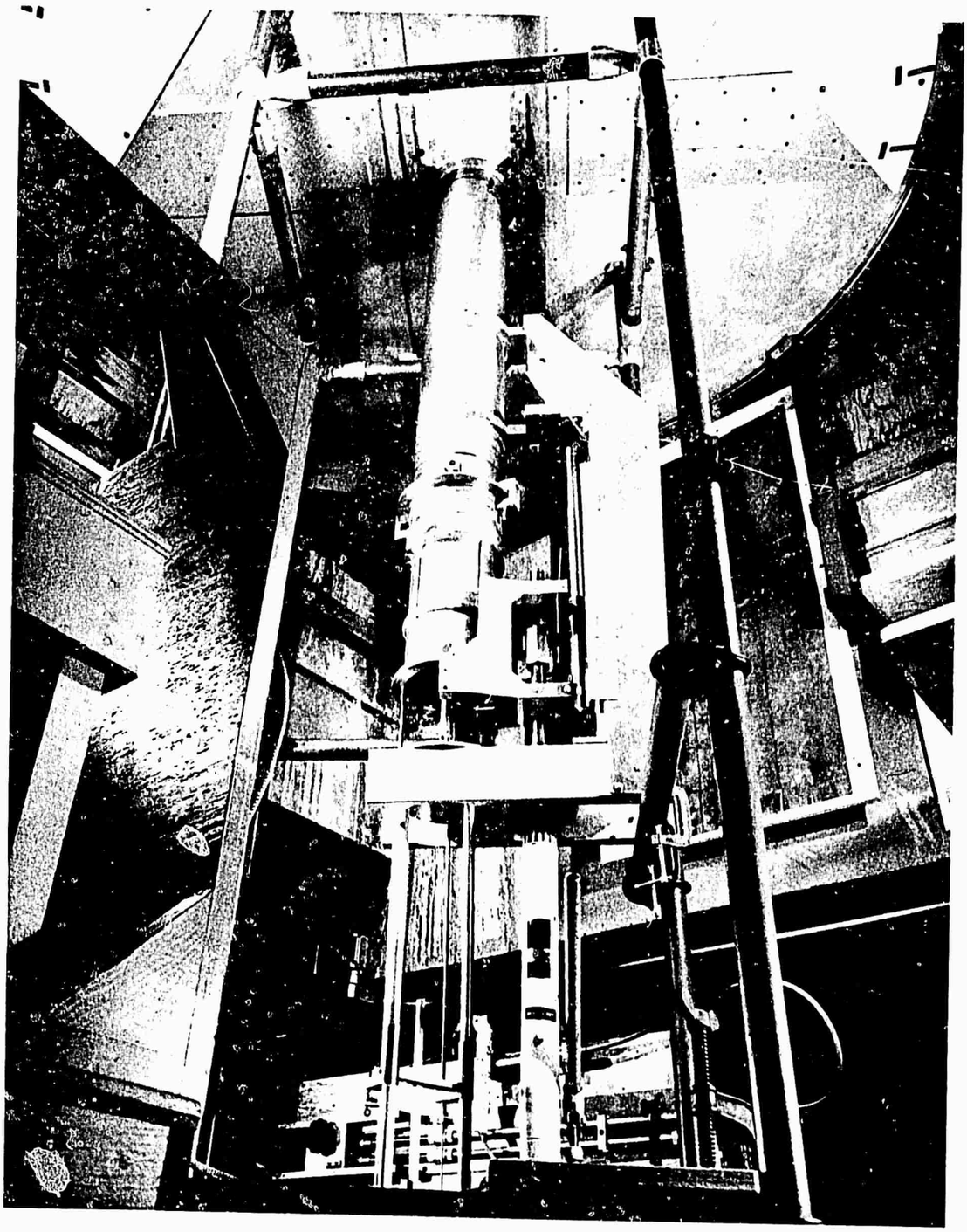

FIG. 4 ANTENNA - COAXIAL - LINE ASSEMBLY

main pipe in order to hold the aluminum frame tightly. On the other hand, an A-shaped hook is used to allow the rim which extends out from tube B, to sit on its two arms. The other end of the hook slides up and down loosely along a rod which is mounted vertically on the aluminum frame. In order to support the heavy weight of tube B and to be able to push it up, another rod is screwed into the center hole of the hook and is supported by a hydraulic jack underneath. A scale with accuracy of 0.1 mm is then placed on one side of the aluminum frame to indicate the position of the hook, and thus the position of tube B. Precise location of tube B can be obtained by adjusting the turning knob on the rod.

In order to hold tube C and level it with the ground plane, two aluminum rods with a $\frac{1}{4}'' \times \frac{1}{4}''$ cross section are inserted into the inside of tube C and mounted onto the inner surface of the tube. The other ends of these two rods are connected together by a piece of aluminum and rest on a 5" diameter aluminum disc which, in turn, is on the base of the aluminum frame. At the top of tube C, a solid disc made of brass is welded in order to seal the inside of tube C from the upper free space. Like the ring holder of tube A, a circular slice is cut away from the rim of the solid disc to accommodate a short-circuiting ring between tube B and tube C.

To center these three tubes along a common axis, and to seal off the coaxial-line system from the rest of the equipments, two short-circuiting rings are placed at the bottom end. The construction of the short-circuiting ring can best be seen in the photograph, Fig. 5. On the other hand, two rings of high-density Styrofoam (trade name - Strofoam HD300), each 2" in length, are fitted tightly into the top end of the gaps. The material has only 5% deformation under a shear strength of 100 lb./inch^2, and is electrically very much like air ($\epsilon_r = 1.07$). Thus, the shunting effect of the Styrofoam is neglected.

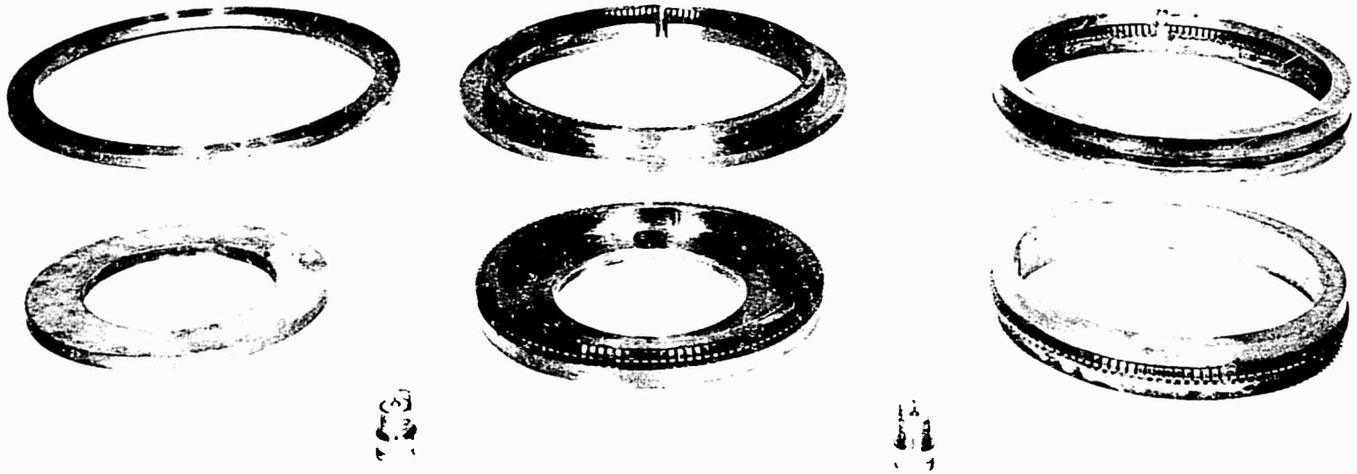

FIG. 5 SHORT-CIRCUIT RINGS AND THE EXCITATION LOOPS

For high-frequency measurements, the short-circuiting ring located between tube A and tube B is replaced by a tuning stub (i. e., an adjustable short-circuit, Fig. 4). The sketch of this stub is not shown in Fig. 3, but is separately shown in Fig. 6. It consists of a fixed short-circuiting ring and an adjustable short-circuiting ring which is supported by four adjustable rods. The assembly is then mounted on tube A by two clamps, each 180° apart from the other.

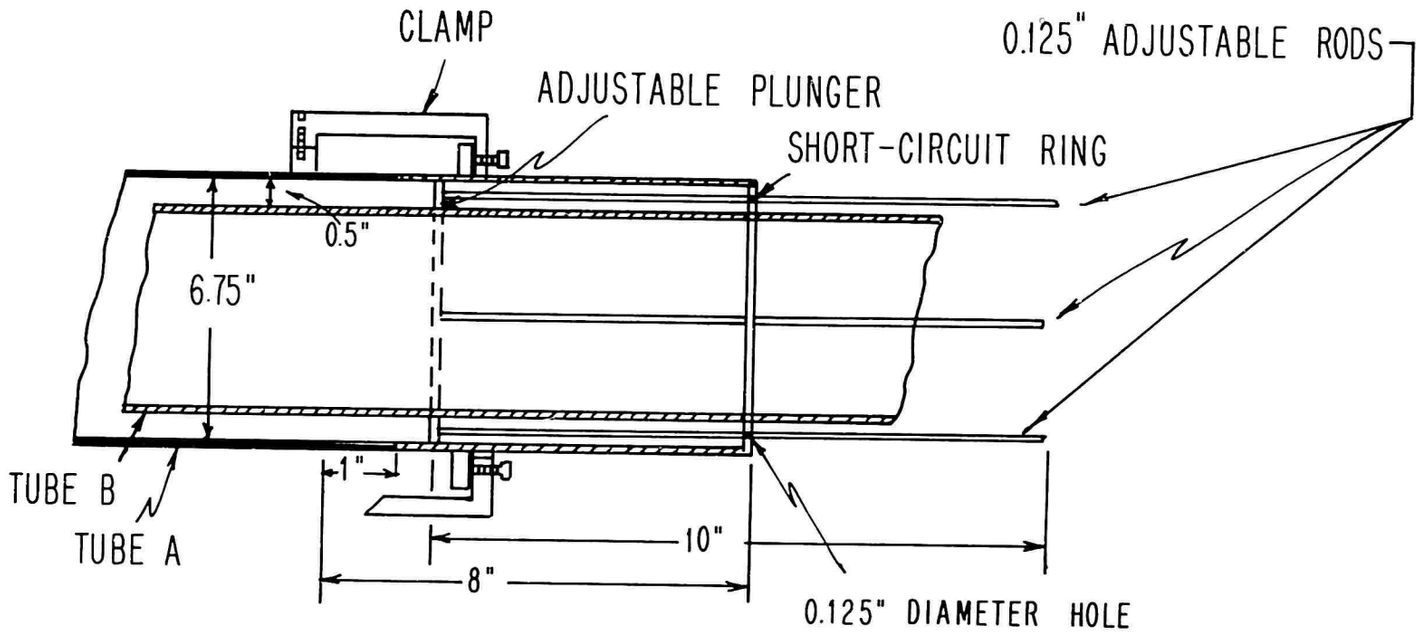

FIG. 6 TUNING-STUB ASSEMBLY

III. MEASURING LINE AND CURRENT PROBE

The design of the measuring line should be different from the usual slotted antenna [4] primarily due to the following considerations: (1) a slot on any of these three tubes will either induce undesirable couplings between the two coaxial-line systems, or increase the radiation loss into the surroundings. Thus, a slot of a few wavelengths long may become a hazard for any significant measurement; (2) a cut on the tube may release the stress and thus distort the shape of the tube. In each case, unwanted higher modes will inevitably be generated in the coaxial-line system. On the other hand, the possibility of using an external probe is immediately eliminated because of its own demerits. Consequently, a built-in measuring line which is half-embedded on the surface of the antenna was used.

A rigid coaxial measuring line is equipped with a slotted outer conductor of $\frac{3}{16}$" in outer diameter, and a loosely contact inner conductor of $\frac{1}{8}$" in outer diameter. The outer conductor has a length of 55" and is half-embedded in a $\frac{1}{8}$" groove on the outside surface of tube B. The portion which extends out from tube B is locked into a $\frac{1}{4}$" O. D. tubing of 24" long. This tubing then extends all the way down through a hole on a rotatable disc and terminates at a locking device consisting of two set screws which in turn, rides on two vertical rods stretched out from under the disc (Fig. 7). As a result, the measuring line can be rotated with tube B by loosening the set screws at both arms of the A-shaped hook. On the other hand, the inner conductor has a total length of 105". One end of the conductor joins with a current loop assembly whose key fits right into the slot on the outer conductor. The other end of the conductor terminates at a junction box. Position of the current probe can thus be fixed and adjusted

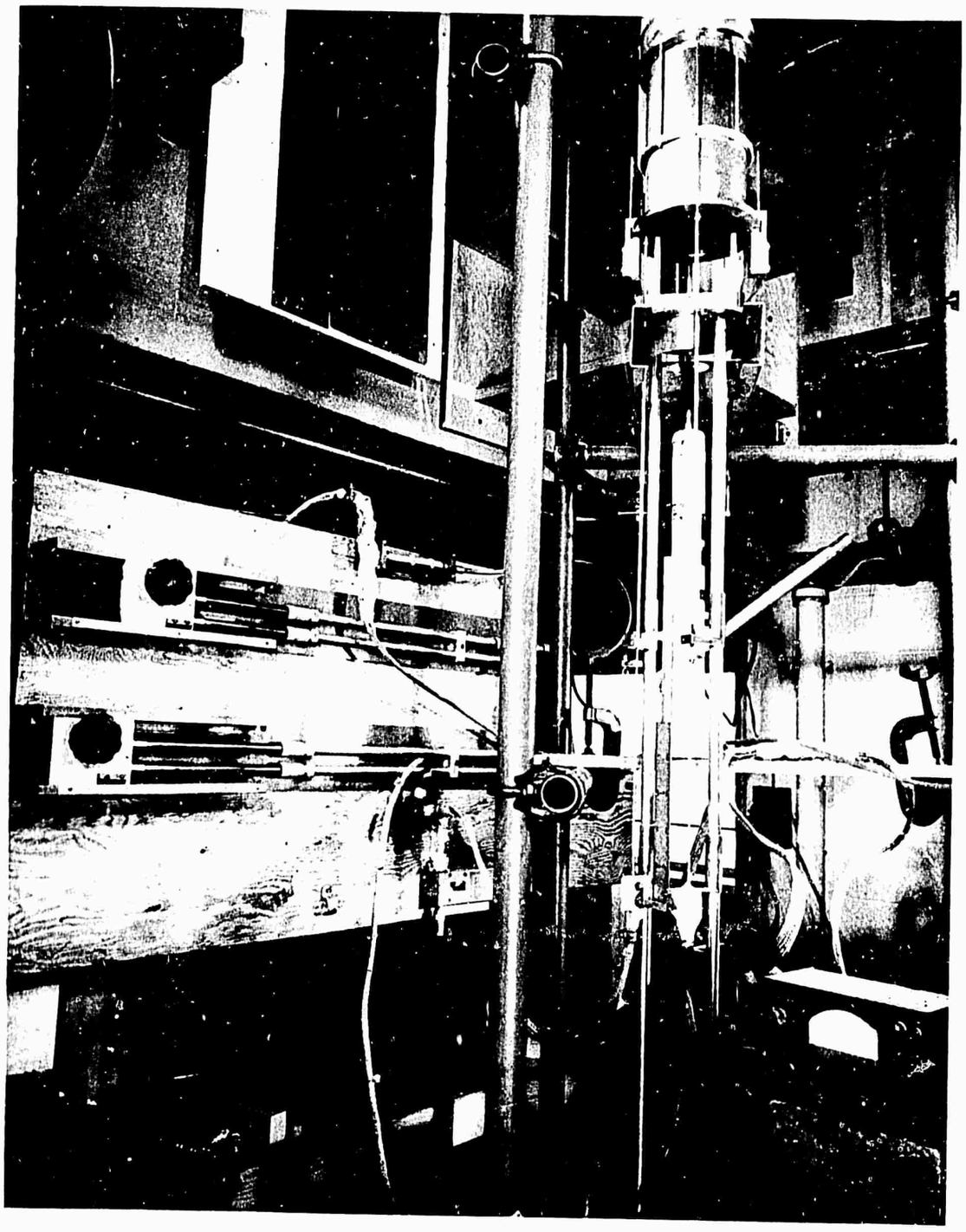

FIG. 7 MEASURING-LINE AND THE ADJUSTABLE PHASE LINE ASSEMBLY

by a set-screw on the locking device. As a consequence, when tube B is leveled with the ground plane, the coaxial gives a 2.0λ-long of measuring line at 600MHz.

Construction of the current probe assembly is indicated in Fig. 8 and the photograph in Fig. 2. The assembly is enclosed in a 0.12" O.D. tube. At one end of the tube, the wall has been machined down to a diameter of 0.094" so that it can be plugged into the inner conductor of the measuring line. At the other end, a key which is made of a rectangular piece of thin brass plate, is welded onto the tube. Then, two holes 0.023" in diameter and 0.195" apart are drilled through the plate in order to accommodate the current probe. The current probe itself is made of a half-loop of thin coaxial wire which has an O.D. of 0.022" and 0.003" wall thickness (trade name - Precision Coaxtube #32 solid advance thermocouple wire). This loop has a diameter of 0.195", and a gap of 0.028" width at its center. The coaxial wire on one side of this loop is short-circuited by applying a dot of solder at its opening, while the coaxial wire on the other side of the loop is bent into the tube. It extends out at the other end of the tube, where it is joined to a section of Microdot cable. A piece of teflon ring is pressed into the tube in order to hold the coaxial wire firmly. The cable is then extended further into the inner conductor until it terminates in a #32-21 Microdot plug in the junction box. This plug, in turn, is attached to a Microdot #33-03 connector which also is in the box. A section of cable can thus be stored inside the junction as a spare. At the output end of the junction box, a Microdot #32-53 connector is used to connect to a standard RG-55U shielded coaxial-line. The precise position of the junction box measured from the top of tube B, and thus the precise position of the probe,

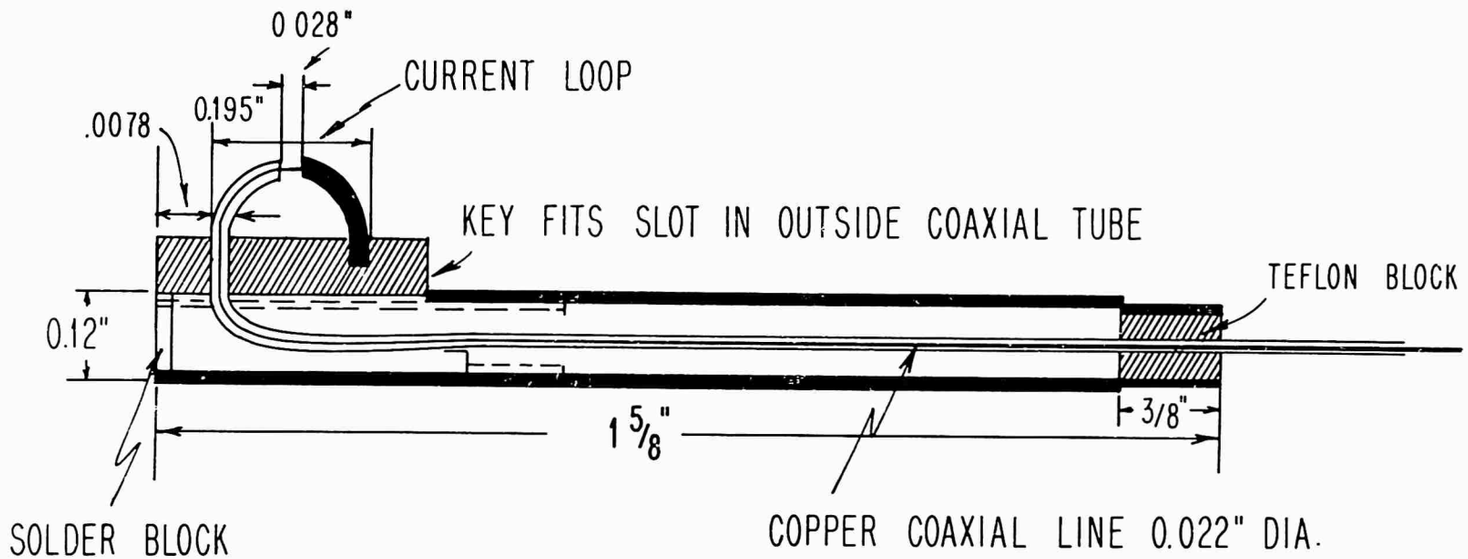

FIG. 8 CURRENT MEASURING PROBE

can be read from a calibrated scale which is attached to the frame of the locking device, with an accuracy of 0.1 mm and can be seen in the photograph, Fig. 7.

Similarly, on the inside surface of the antenna (tube B), another measuring line is embedded 90° apart from the one on the outside surface. The precise position of this probe can also be read from the same calibrated scale.

IV. SUPERHETERODYNE SYSTEM

All measurements were made with a superheterodyne system. The transmitter used is an Airbornne R. F. Oscillator (series No. 124A) which used a power triode 2C39A coupled capacitively to a tuned cavity; it resonates in the $\frac{1}{4}\lambda$-mode. Power output from the transmitter varies from 10 watts to 20 watts within the operating frequency range of this mode (i. e., 200-950MHz). The output of the transmitter is padded by a 40 ft. long lossy coaxial cable (RG-21/U) in order to isolate the transmitter operation from the load. A low-pass filter (General Radio 874-F1000L) is then inserted into the circuit to suppress any possible higher harmonics. The frequency of the transmitting signal is determined with a cavity-type wavemeter (TS-212/UPM-2) which measures the wavelength of the signal with an accuracy of at least 0. 1 mm.

On the receiving end, the signal picked up from the measuring probe is mixed with a signal generated from a local oscillator (General Radio 1209-C unit oscillator) in a crystal mixer (General Radio 874MRL). The difference between the two frequencies is then amplified and detected from a unit I. F. amplifier (General Radio 1216-A) which has a center frequency of 30MHz and a bandwidth of 0. 5MHz. This amplifier has to be calibrated against a slotted line (Hewlett Packard, Type 8054) with a standard short-circuiting termination. The superheterodyne system becomes very stable after two to three hours of warm-up time.

V. EXCITATION OF TEM MODE

In waveguide analysis [5], it is well-known that the second lowest mode in a coaxial-line is the cosinusoidally-distributed TE_{11}-mode which has a cutoff frequency near 600MHz in the present case. Since no bifurcation can be placed to eliminate such a mode, the only logical approach is to excite the coaxial-line symmetrically. This can be done by setting a pair of identically-driven current loops placed 180° apart from each other at the bottom of the coaxial-line. However, due to the mechanical difficulty of producing two identical loops, a set of tuning devices must be added to assure an equal excitation on both loops.

The construction of the exciting loop assembly is indicated in Fig. 9 and also in Fig. 5. The loop is constructed from an ordinary coaxial N-type panel receptor (Ug-58/U). The part extending out from the panel is machined down to a $\frac{1}{2}$" O. D. and $\frac{1}{2}$"-long tube. A section of thin copper wire of 0. 025" in diameter is then soldered at both ends to the inner conductor and the rim of the outer conductor of the receptor, in order to form a 0. 25"×0. 25" rectangular loop. Two such loops are then locked by Allen screws into two sockets which, in turn, are mounted on the opposite sides of the outer surface of tube A. They are located 1" away from the bottom end of the tube. To align the positions of the exciting loop vertically with respect to the ground plane, each loop is driven separately. A maximum signal is picked up by the measuring probe (which is 90° apart from both loops and is away from the end of the coaxial-line), if the position of the loop is so aligned.

The schematic layout of the tuning device is shown in Fig. 10 and also in the photograph, Fig. 11. Each of the loops is connected to a

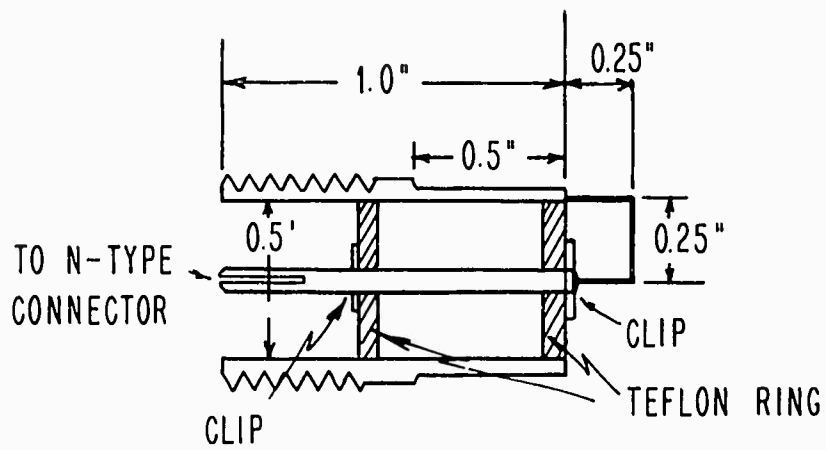

FIG. 9 EXCITATION LOOP

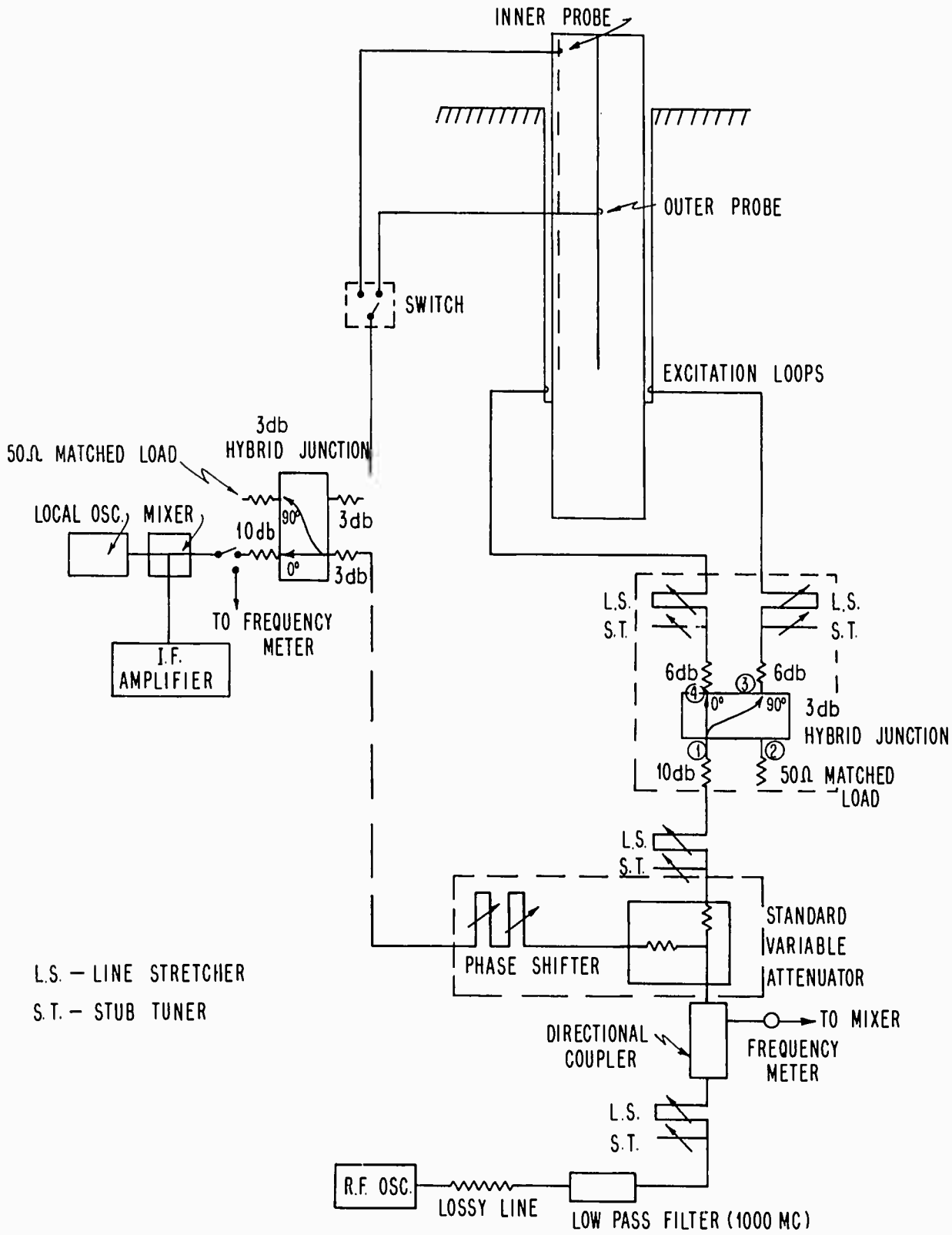

FIG. 10 SCHEMATIC LAYOUT OF THE EXPERIMENTAL SET-UP

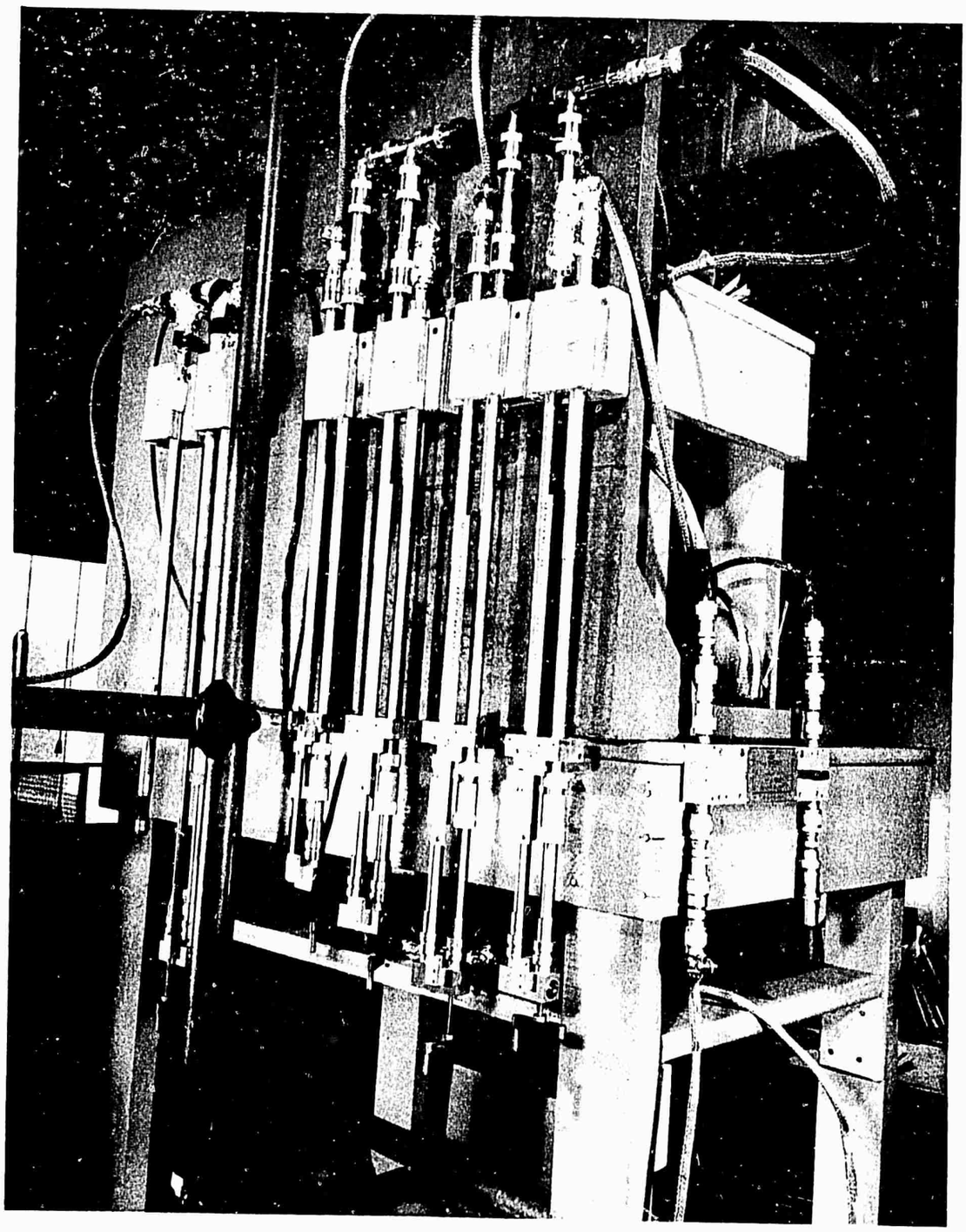

FIG. 11 TUNING DEVICE FOR THE EXCITATION LOOPS

precision line stretcher (L.S.) and a precision single-stub tuner (S.T.). These are made of a Trombone constant-impedance (50 ohm) adjustable line and a 50 ohm air line (General Radio 874-LTL and 874-LK). The end of the S.T. is padded by a 6-db attenuator before it is connected to one of the two output terminals (i.e., ports 3 and 4 in Fig. 10) of a 3-db hybrid junction (Narda Coaxial Hybrid Type 3031-91). The input terminals of the hybrid (ports 1 and 2) are connected to a 50 ohm matched load and to the source line which is padded by a 10-db attenuator. Therefore, when the source is connected to port 1, the output at port 3 will be a signal with a 90° phase-shift while at port 4 is in phase. When the source is connected to port 2, the output at port 3 will be a signal with a -90° phase-shift while at port 4 is still in phase. Tuning of the two loops then proceeds as follows: (i) disconnect port 3 and replace the pad by a 50 ohm matched load; (ii) adjust the L.S. and S.T. to such positions that the amplitude of the optimum signal picked up by the measuring probe is insensitive to the position of the L.S. and S.T.; (iii) reconnect port 3; disconnect and replace port 4 by the matched load; (iv) adjust the L.S. and S.T. of port 3 in order to obtain a signal which has the same amplitude as recorded in (ii); (v) reconnect port 4 and adjust the L.S. and S.T. on port 4 such that the signal picked up by the probe is a minimum. This will give the two loops currents which have the same amplitudes, but which differ in phase by 180°; (vi) the interchange of ports 1 and 2 will then give excitations for the two loops with the same amplitudes and the same phases. To check the uniformity of the excitation obtained by this procedure, the measuring probe is rotated against the exciting loops. Repetition of the procedure is necessary whenever a phase drift occurs.

When the operating frequency is higher than the cutoff of the TE_{11}-mode, the short-circuiting ring is replaced by the stub tuner. Adjustment of the movable short-circuit is necessary in order to obtain an impedance match only for the TEM mode in the coaxial-line. The same tuning procedure can then be repeated.

VI. INPUT ADMITTANCE AND CURRENT DISTRIBUTION MEASUREMENTS

A modified standing-wave-ratio (SWR) method was used for the measurement of input admittance. This method has been discussed in detail by D. King [6]. To apply to the present set-up, some slight modifications are introduced as follow:

Assume W is the distance measured from the top of tube B to the center of the measuring probe. The current standing-wave distribution on the surface of the inner conductor of the coaxial-line (tube B) at $W = W_{\frac{1}{2}}$ is readily known as

$$I_{\frac{1}{2}}^2 = K\{\sinh^2[A_w \pm \alpha(W_{\frac{1}{2}} - W_{min})] + \sin^2 k_o(W_{\frac{1}{2}} - W_{min})\}, \qquad (1)$$

where $A_w = \alpha W_{min} + \tau$ and $Y_L = Y_o \tanh(\tau + i\phi)$. Here,

K = proportionality constant;

k_o = free-space wave number;

τ = terminal attenuation function;

ϕ = terminal phase function;

α = attenuation constant of the conductor;

Y_o = characteristic admittance of TEM mode in the coaxial-line;

Y_L = input admittance;

W_{min} = the current minimum near-by $W_{\frac{1}{2}}$.

Because of the high conductivity of the brass tube, $\alpha(W_{\frac{1}{2}} - W_{min}) < \alpha W_{min} << 1$. Thus, the following simple relationship among SWR, τ and $W_{\frac{1}{2}}$ can be obtained:

$$\frac{1}{(SWR)^2 - 1} = \sinh^2 A_w \doteq \frac{\sin^2 k_o(W_2 - W_{min}) - C^2 \sin^2 k_o(W_1 - W_{min})}{C^2 - 1} \qquad (2)$$

where $C = I_2^2/I_1^2$. Assume that the current distribution at W_1' also has a value I_1 and that W_1, W_1' are very close to W_{min}, then

$$W_{min} \doteq \frac{1}{2}(W_1 + W_1') . \tag{3}$$

The substitution of Eq. (3) into Eq. (1) yields the expression of τ in terms of C, W_1, W_1' and W_2. The value for ϕ can be determined from W_{min} and the corresponding minimum position for a short-circuit, W_{short}, which can either be measured by placing a short-circuiting ring to close the open gap, or computed directly from a known frequency:

$$\phi = \frac{\pi}{2} + k_o\left(\frac{W_1 + W_1'}{2} - h - W_{short}\right) . \tag{4}$$

Here, h is the length of the antenna, i.e., the portion that extends from the ground plane. The substitution of Eq. (2) and Eq. (4) into Eq. (1) will then give the value for the input admittance, Y_L. In the case of $I_1 = I_{min}$ and $I_2 = I_{max}$, this method is identical with the conventional SWR method. However, it has the advantage of not requiring knowledge of the precise position of I_{min}. This makes it particularly useful when the SWR is high and I_{min} is masked by noise (as when antenna is short).

The relative current distributions on both the outside and inside surfaces of the antenna were measured in terms of the amplitudes and phases of the measuring probes. Thus, the relative amplitude of the current distribution at a certain position can be obtained directly from the meter reading of the measuring probe at that position. The relative phase of the current distribution was obtained from a comparison with a calibrated phase line. A schematic layout and the construction of the phase line are shown in Figs. 10 and 11. It consists of a standard adjustable

attenuator (General Radio 874GAL) with an attenuation from 0db to 120db when the input line is terminated in 50 ohm, and two adjustable 50 ohm trombone lines (General Radio 874LTL) which are connected in series and can be adjusted with an accuracy of 0.1 mm. The end of this line is padded by a 6db attenuator before it is connected to one of the input terminal of a 3db hybrid junction (Narda Coaxial Hybrid 3031-91) and compared with the signal picked up by the measuring probe. The output terminals are connected separately to a 50 ohm matched load and to a crystal mixer padded by a 10db attenuator. Thus, the reflected signal from the hybrid to the phase line is very small and a travelling wave distribution on the phase line is assumed. Discussion on the phase line can be found in the literature [7], [8], where it is shown to be better than an open slotted-line.

VII. RESULTS AND DISCUSSIONS

A. Input Admittance:

Measurements of the input admittance were taken within the frequency range of 400-900 MHz (Table 2). Electrically, this corresponds to an antenna with a radius ranging from 0.103 to 0.217 of a wavelength, which is precisely the range not available from the earlier studies. Defficiencies in the apparatus used in this experiment influence the results in many ways. Among them, the irregularity in the physical characteristic of the tubes is the most serious. As mentioned in the previous section, they were recorded to have an average of 0.01"-0.02" error in diameter and a bend of 0.04" over a length of 40". When compared to the dimension of the spacing between tube A and tube B, this will give at least a few percent error everywhere along the coaxial system. Besides, tube B (i.e., the antenna) is kept in position mainly by the alignment of the short-circuiting ring at the bottom end and the Styrofoam ring near the open end. This alignment is considerably worse, when a long section of the antenna extends out above the ground plane. In any case, residue higher modes will inevitably exist, even when equal excitations of the two loops are obtained. Consequently, a shift in the minimum position of the current standing-wave distribution will be produced along the coaxial-line, which in turn, gives rise to an inaccurate measurement of the terminal function. Besides, in the analysis of the experimental data, the input admittance has to be normalized by the characteristic admittance of the TEM mode in the coaxial-line, which is proportional to $\ell n \frac{a}{b}$ where b, a are the radii of tube B, A respectively. Thus, any deviation from the true ratio of the two tubes will change the absolute value of the input admittance. In addition, the effects of a finite

Frequency (MHz)	Radius/λ *	Circumference/λ
404.02	0.103	0.645
466.45	0.118	0.744
506.47	0.129	0.808
555.76	0.141	0.887
601.08	0.153	0.959
647.31	0.164	1.033
706.71	0.180	1.128
756.43	0.192	1.207
805.41	0.205	1.285
853.24	0.217	1.362

* λ is the free-space wavelength

Table 2. Operation frequencies

ground plane, wind, surroundings, Styrofoam rings, imperfect short-circuiting rings,... etc., will also introduce errors in the measurement. These errors, however, prove to be only very minor obstacles to a successful measurement.

Experimental values of the input conductance vs. the height of the antenna (i.e., $\frac{h}{\lambda}$) are shown graphically in Fig. 12, together with the theoretical solutions obtained from both one-sided and two-sided delta-function excitations. Note that the experimental values have been divided by 2 in order to simulate a dipole antenna. For all radii, the experimental values agree very well with the theoretical solution for one-sided excitation, except perhaps when h is long. This is because when tube B is extended too far out over the ground plane, it is more difficult to center

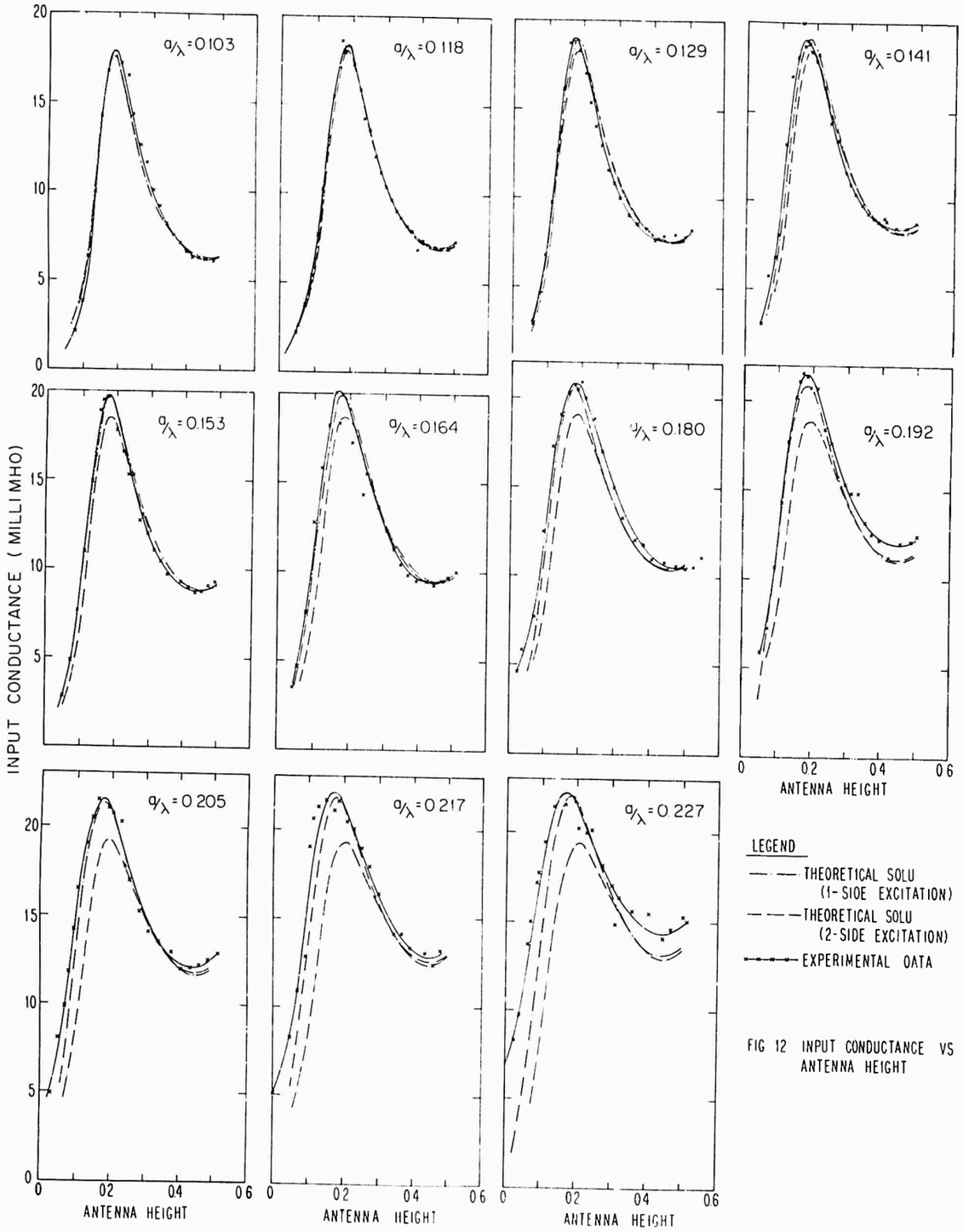

FIG 12 INPUT CONDUCTANCE VS ANTENNA HEIGHT

the tube along the common axis. Also, when the antenna is short, a slight shift of the two curves is observed. This probably means that the equivalent length of the antenna should be longer than the actual physical length of the antenna above the ground plane. When the antenna is extremely short, the corresponding experimental value is always larger than the theoretical value. This is due to the radiation of the open gap which has no counterpart in the theoretical model of a delta-function excitation.

Deviation of the theoretical solution for two-sided excitation from that of the one-sided excitation becomes significant only when the radius of the antenna is large enough. In Table 3, the input admittances for a quater-wave antennas (i.e., $\frac{h}{\lambda} = 0.125$) are tabulated for the experimental

Radius/λ	Experiment	Theoretical (one-sided)	Theoretical (two-sided)
0.103	8.50 + j22.70	9.82 + j∞	9.50 + j∞
0.118	11.40 + j23.35	11.15 + j∞	10.50 + j∞
0.129	12.40 + j24.20	12.10 + j∞	11.10 + j∞
0.141	14.30 + j24.50	13.00 + j∞	11.70 + j∞
0.153	14.40 + j25.70	13.90 + j∞	12.15 + j∞
0.164	15.50 + j25.97	14.70 + j∞	12.42 + j∞
0.180	16.67 + j27.42	15.65 + j∞	12.72 + j∞
0.192	16.90 + j28.18	16.31 + j∞	12.80 + j∞
0.205	18.30 + j27.90	17.40 + j∞	12.80 + j∞
0.217	19.40 + j28.20	17.80 + j∞	12.62 + j∞

Table 3. Input Admittances for Quater-Wave Antennas

and the two theoretical models. Also, this deviation is more pronounced when the antenna is short. In this case, the coupling between the outside and inside generators makes them interact in such a way that the inside generator actually absorbs power from the outside generator. As indicated in a later section, the same conclusion can be drawn from measurements of the current distribution on the inside surface.

Experimental values of the input admittance are shown graphically in Fig. 13. Note that, since the input admittance is derived from the current standing-wave distribution away from the open end, the effect of the higher modes at the open end is included in the calculation. As a consequence, the input admittance thus obtained is the apparent input admittance in the coaxial-line looking toward the antenna, instead of the exact input admittance defined at the open end. Also from the study of the location of the input admittance on a Smith chart, it is known that the input susceptance is very sensitive to the measurement of the position of the current minimum. Therefore, it is less accurate than the input conductance. It also cannot be compared with the theoretical solution, because the delta-function excitation always gives an infinite susceptance. However, from Fig. 13, it is observed that the admittance spiral moves up and toward the right, when the antenna becomes thicker. Also it converges faster toward the center. These should mean that the antenna is more capacitive for any corresponding length of the antenna. It also radiates more power, and is less sensitive to the length of the antenna.

B. Current Distributions:

Experimental values for current distributions on the outside surface of the antenna are plotted in Fig. 14 for a full-wave antenna and in Fig. 15 for a half-wave antenna, together with the theoretical solution with a one-sided

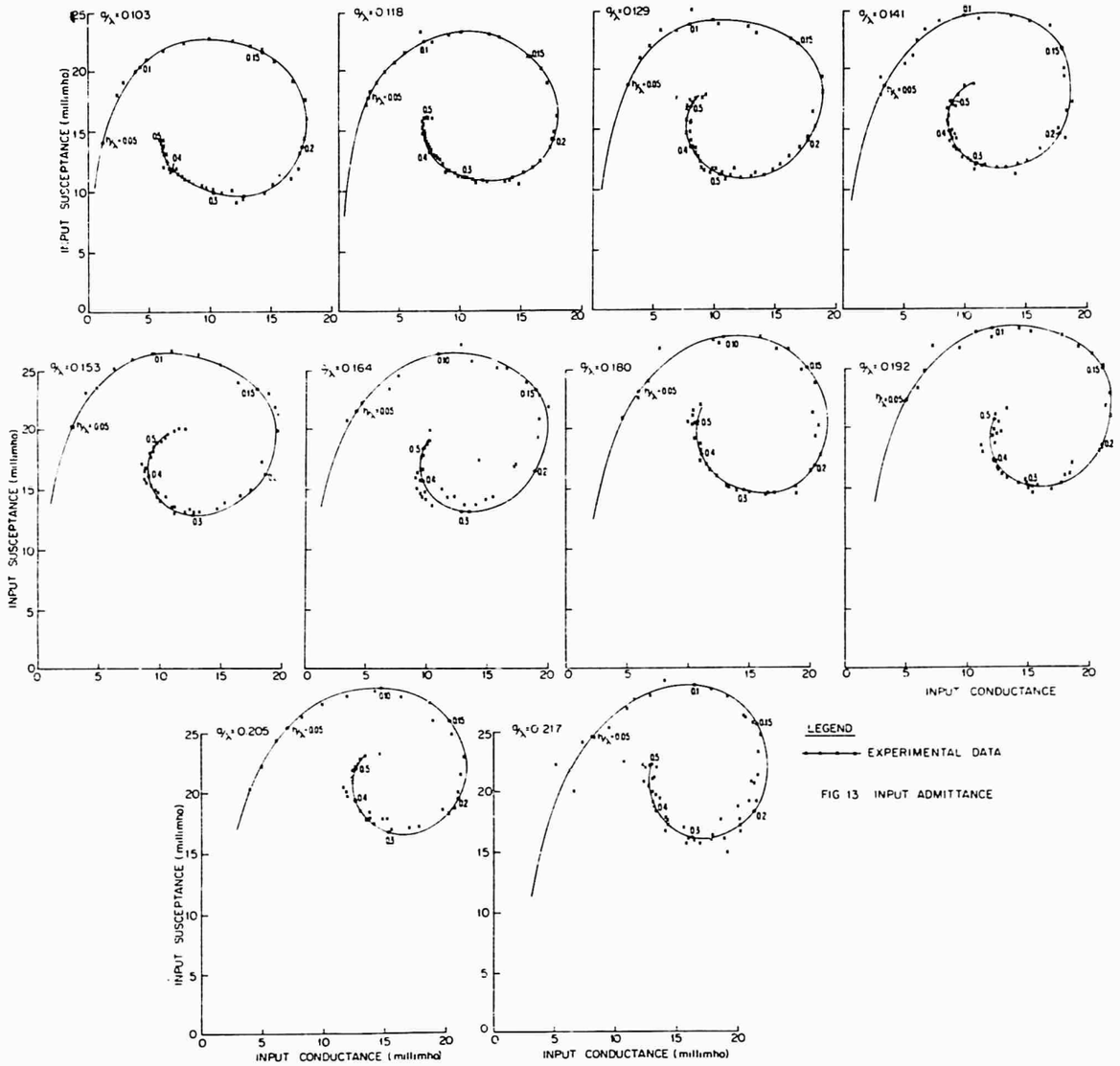

FIG 13 INPUT ADMITTANCE

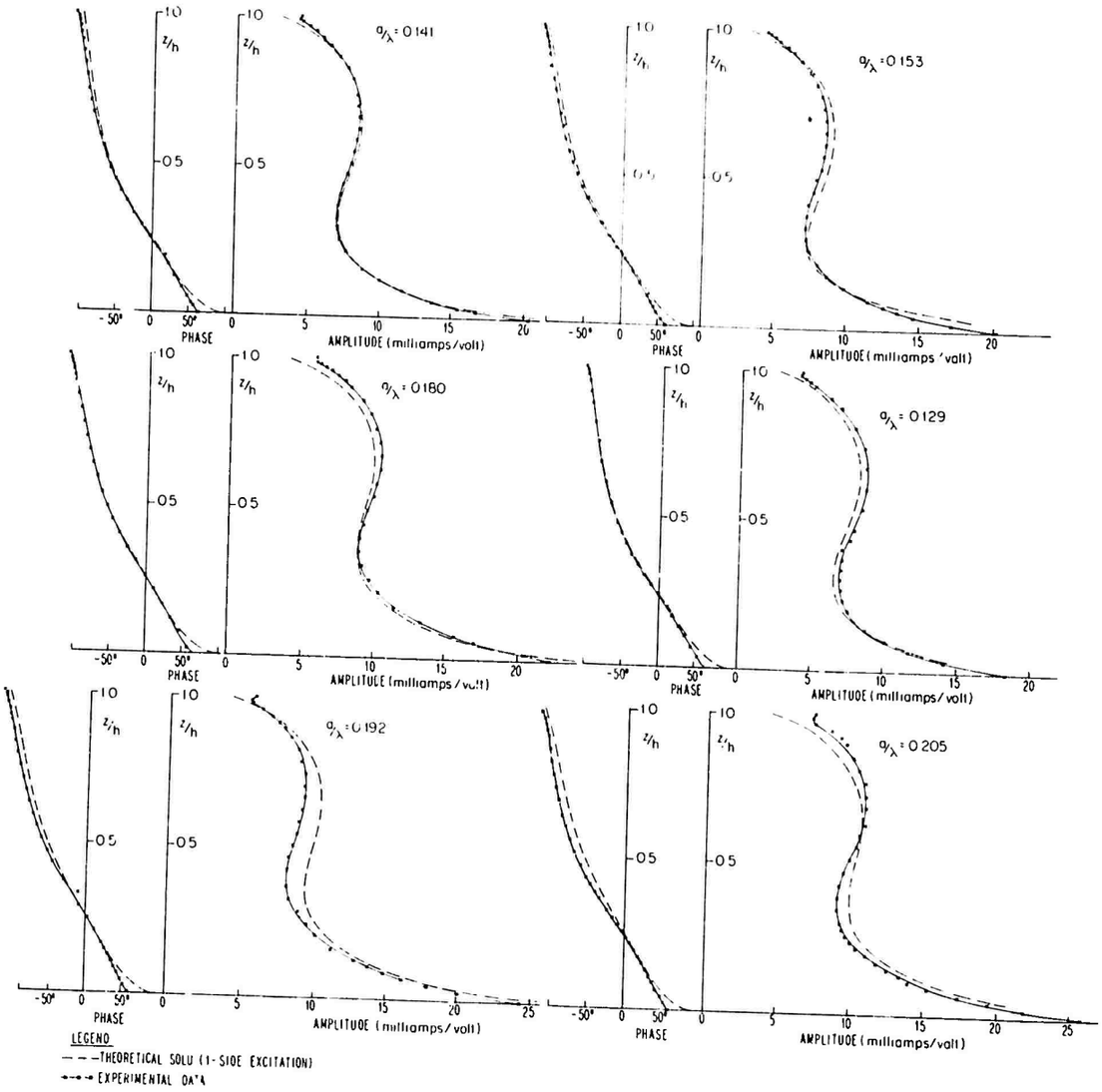

FIG 14 OUTSIDE CURRENT DISTRIBUTION OF FULL WAVE ANTENNAS

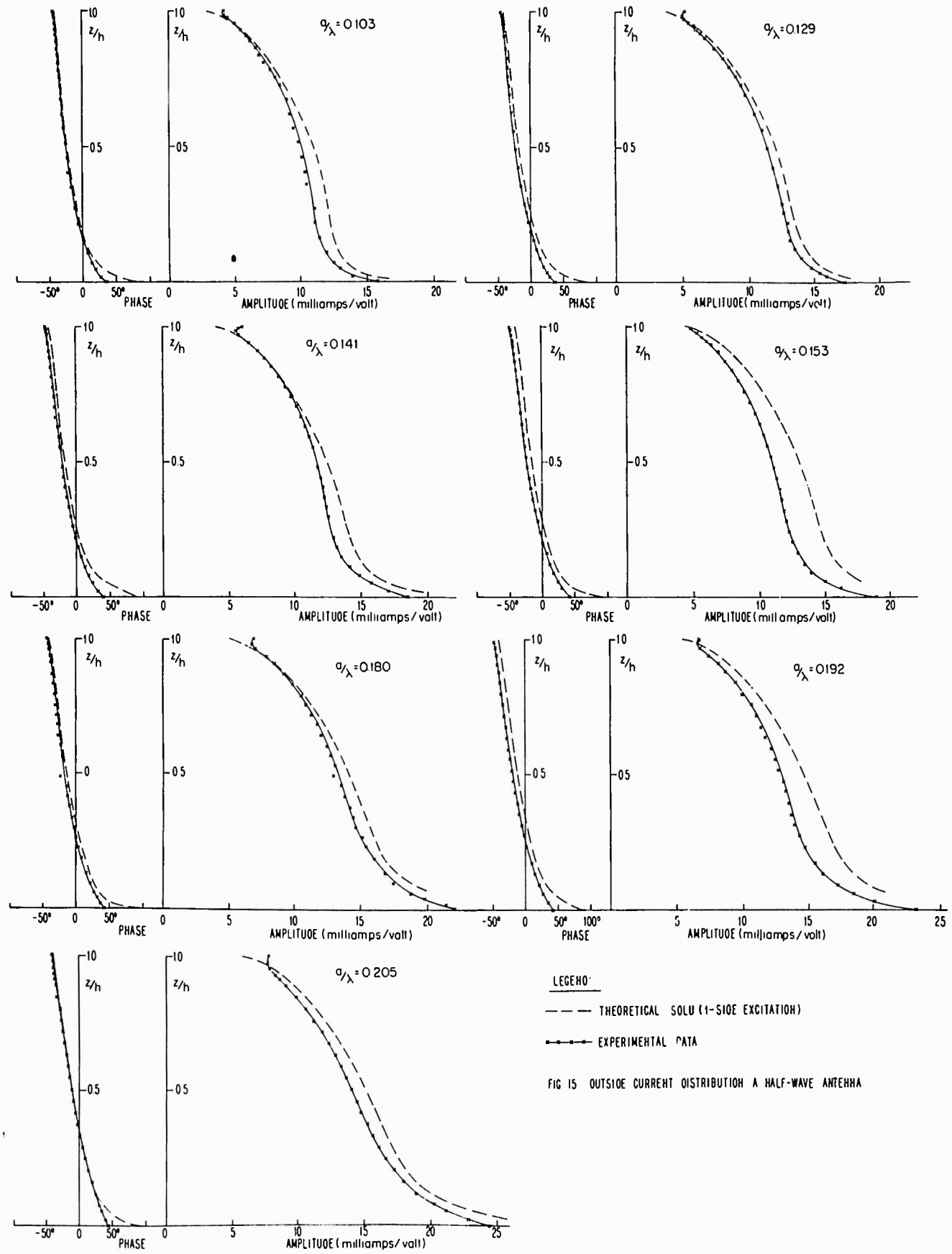

FIG 15 OUTSIDE CURRENT DISTRIBUTION A HALF-WAVE ANTENNA

excitation. In order to obtain an absolute current distribution instead of a relative one, the experimental values are nomalized with respect to the apparent input admittance. Since the difference between the apparent input admittance and the exact input admittance at the driving point is essentially an end correction term, the agreement between the theoretical and the experimental curves in Figs. 14 and 15 is quite satisfactory. On the other hand, other nomalization procedures such as the curve-fitting method are more misleading, since they must fit the experimental results with a finite gap excitation to the theoretical results with a delta-function excitation. When the radius of the antenna is large, it is not clear theoretically to what extent the localized effect of the delta-function should appear in the current distribution. Aside from this difficulty in nomalization, the general shape of the current distribution indeed agrees very well with the theoretical solution, except near the ground plane and the top of the antenna where the current loop no longer picked up only the magnetic field. In addition, near the ground plane, it differs from the theoretical curve mainly because the latter has a logarithmic current due to the delta-function.

In order to examine the coupling between the outside and inside surfaces of the antenna, current distribution on both surfaces are measured and compared with the currents obtained theoretically with a one-sided excitation, (Fig. 16). The radius of the antenna is 0.217λ, the four different lengths 0.1λ, 0.15λ, 0.20λ, 0.25λ were used. In this case, experimental values for the inside current distribution can only be nomalized with respect to extrapolated experimental values at the top of the antenna, since no correlation between the two measuring probes can be found. For this purpose, measured current distributions on both outside and inside surfaces (i.e., meter readings) are first plotted on a graph.

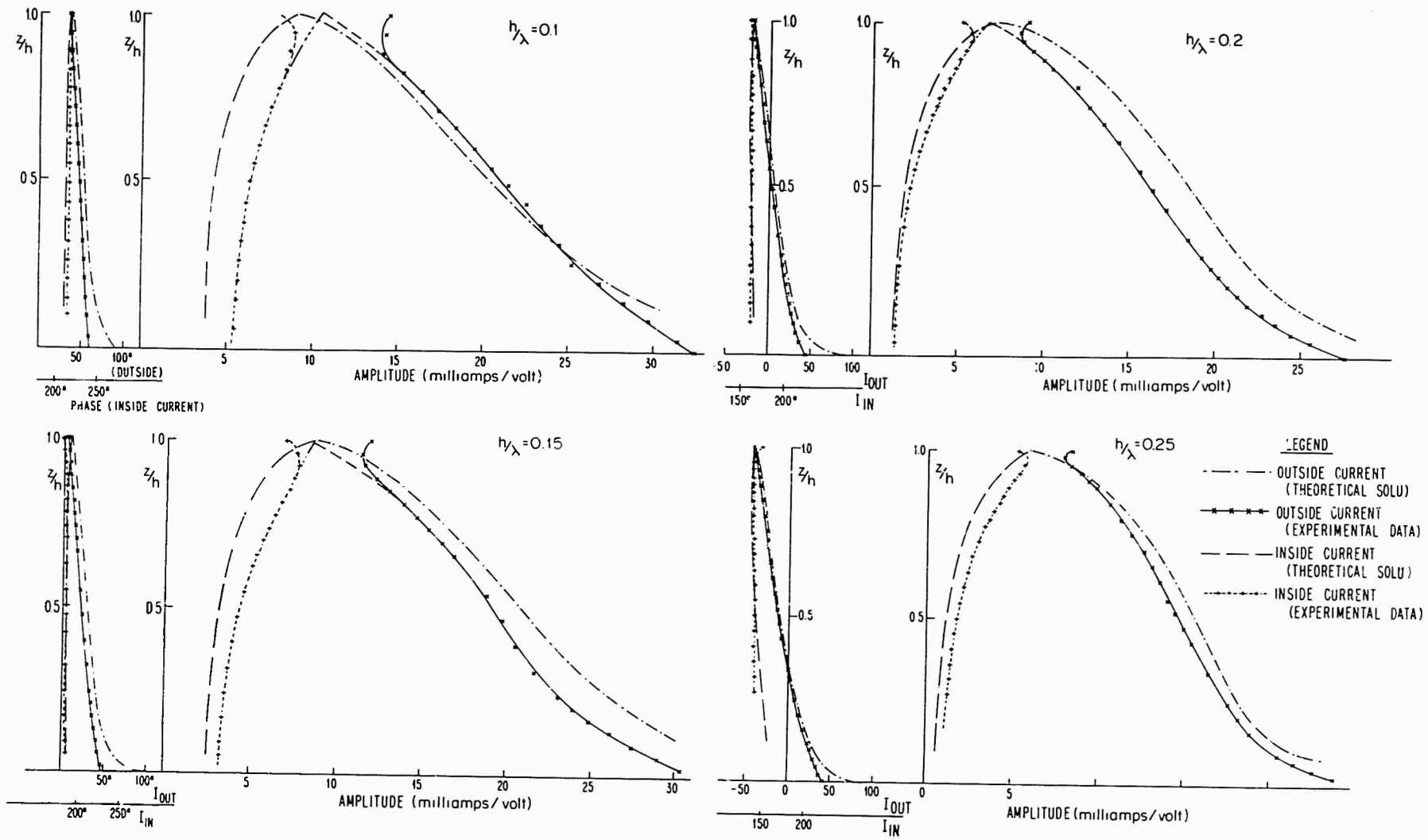

FIG. 16 OUTSIDE AND INSIDE CURRENT DISTRIBUTION OF AN ANTENNA WITH $\frac{a}{\lambda} = 0.217$

Two pseudo meter readings for current distributions at the top can be obtained from extrapolations of the outside and inside current distributions near the top of the antenna. By requiring the two actual current distributions at the top to be equal in magnitude but out of phase, normalization of the inside current can thus be obtained. Although the current distribution so normalized depends very much on how well the extrapolation is made, it does give a clear physical insight into the situation. It is very clear that the shorter the antenna, the stronger the coupling from the outside to the inside. Also clear is that the coupling gives an inside current distribution whose real part is negative at the driving point, particularly when the antenna is short. Therefore, if a generator is located on the inside surface, the self-conductance of this generator is still small, because all circular waveguide modes are way below the cutoff frequencies. However, because the mutual conductance is negative, the total input conductance with the two-sided excitation should be less than that with the one-sided excitation. This then confirms the conclusion obtained from the measurements of the input conductance.

REFERENCES

1. D. C. Chang, "On the electrically thick, cylindrical antenna," Tech. Report No. 509, Cruft Lab., Harvard Univ., Cambridge, Mass., Aug. 1966.

2. S. Holly, private communication.

3. S. Prasad and Y. N. Rama Rau, "Experimental investigation of thick, cylindrical antenna," Tech. Report No. 22, New Mexico State University, University Park, N. M., June 1964.

4. D. Mack, "A study of circular arrays - Experimental equipments," Tech. Report No. 381, Cruft Lab., Harvard University, Cambridge, Mass., May 1963.

5. R. N. Ghose, Microwave circuit theory and analysis, McGraw Hill, New York, p. 112, 1963.

6. D. D. King, Measurement at centimeter wavelength, Van Nortrand, N. Y., pp. 193-195, 1952

7. W. M. Cheong, "Arrays of unequal and equally-spaced dipoles," a Ph.D. dissertation, Harvard Univ., Cambridge, Mass., Jan. 1967.

8. H. Whiteside, "Electromagnetic field probes," Tech. Report No. 377, Cruft Lab., Harvard Univ., Cambridge, Mass., Oct. 1962.

ACKNOWLEDGEMENT

The author wishes to express his gratitude to Professor R. W. P. King for his introduction of this subject, and for his patient guidance over the past few years. He also thanks Mr. Neal Whiteman for his technical assistance.

Unclassified
Security Classification

DOCUMENT CONTROL DATA - R & D

(Security classification of title, body of abstract and indexing annotation must be entered when the overall report is classified)

1. ORIGINATING ACTIVITY (Corporate author)
Cruft Laboratory
Division of Engineering and Applied Physics
Harvard University, Cambridge, Massachusetts

2a. REPORT SECURITY CLASSIFICATION
Unclassified

2b. GROUP

3. REPORT TITLE
AN EXPERIMENTAL STUDY OF AN ELECTRICALLY THICK, TUBULAR, MONOPOLE ANTENNA DRIVEN BY A COAXIAL TRANSMISSION LINE

4. DESCRIPTIVE NOTES (Type of report and inclusive dates)
Interim Scientific Report

5. AUTHOR(S) (First name, middle initial, last name)
David C. Chang

6. REPORT DATE
June 1967

7a. TOTAL NO. OF PAGES
42

7b. NO. OF REFS
8

8a. CONTRACT OR GRANT NO.
AF19(628)-2406 NSF GK-273

b. PROJECT NO. and Task No. 5635,02
Work Unit Nos. 56350201

c. DOD Element No. 61445014

d. DOD Subelement No. 681305

9a. ORIGINATOR'S REPORT NUMBER(S)
Cruft Laboratory
Scientific Report No. 19 (Series 3)

9b. OTHER REPORT NO(S) (Any other numbers that may be assigned this report)
AFCRL-67-0406

10. DISTRIBUTION STATEMENT
Distribution of this document is unlimited. It may be released to the Clearinghouse, Department of Commerce, for sale to the general public.

11. SUPPLEMENTARY NOTES

12. SPONSORING MILITARY ACTIVITY
Air Force Cambridge Research Laboratories (CRD)
L. G Hanscom Field, Bedford, Mass.

13. ABSTRACT
Current distribution and input admittance of an electrically thick, tubular, monopole antenna driven by a coaxial transmission over a ground plane has been investigated and compared with theoretical results. When the circumference of the antenna is comparable to a free-space wavelength, this experiment verifies that the theoretical model of a tubular dipole antenna with a delta-function excitation only on the outside surface describes the experimental situation more properly than the conventional model of a delta-function excitation on both outside and inside surfaces of the antenna.

DD FORM 1 NOV 65 1473 (PAGE 1)
S/N 0101-807-6811

Unclassified
Security Classification
A-31408

Unclassified
Security Classification

14 KEY WORDS	LINK A ROLE	LINK A WT	LINK B ROLE	LINK B WT	LINK C ROLE	LINK C WT
electrically thick, tubular, monopole antenna						
current distribution						
input admittance						

DD FORM 1 NOV 65 1473 (BACK)
S/N 0101-807-6821

Unclassified
Security Classification

A-31409