AMRL-TR-67-59

AD658204

PRESSURE SEALING CLOSURES FOR FULL PRESSURE PROTECTIVE SUIT ASSEMBLIES

ROGER M. HEITZ
GARY G. BROWN

NORTHROP SPACE LABORATORIES
NORTHROP NORAIR

JUNE 1967

Distribution of this document is unlimited. It may be released to the Clearinghouse, Department of Commerce, for sale to the general public.

AEROSPACE MEDICAL RESEARCH LABORATORIES
ALTITUDE PROTECTION BRANCH LIFE SUPPORT DIVISION
AIR FORCE SYSTEMS COMMAND
WRIGHT-PATTERSON AIR FORCE BASE, OHIO 45433

62

NOTICES

When US Government drawings, specifications, or other data are used for any purpose other than a definitely related Government procurement operation, the Government thereby incurs no responsibility nor any obligation whatsoever, and the fact that the Government may have formulated, furnished, or in any way supplied the said drawings, specifications, or other data, is not to be regarded by implication or otherwise, as in any manner licensing the holder or any other person or corporation, or conveying any rights or permission to manufacture, use, or sell any patented invention that may in any way be related thereto.

Federal Government agencies and their contractors registered with Defense Documentation Center (DDC) should direct requests for copies of this report to:

DDC
Cameron Station
Alexandria, Virginia 22314

Non-DDC users may purchase copies of this report from:

Chief, Storage and Dissemination Section
Clearinghouse for Federal Scientific & Technical Information (CFSTI)
Sills Building
5285 Port Royal Road
Springfield, Virginia 22151

Organizations and individuals receiving reports via the Aerospace Medical Research Laboratories' automatic mailing lists should submit the addressograph plate stamp on the report envelope or refer to the code number when corresponding about change of address or cancellation.

Do not return this copy. Retain or destroy.

800 - August 1967 - CO455-74-90

AMRL-TR-67-59

PRESSURE SEALING CLOSURES FOR FULL PRESSURE PROTECTIVE SUIT ASSEMBLIES

ROGER M. HEITZ

GARY C. BROWN

Distribution of this document is unlimited. It may be released to the Clearinghouse, Department of Commerce, for sale to the general public.

FOREWORD

This study was conducted by Northrop Space Laboratories, Hawthorne, California 90250, under Air Force Contract AF 33(615)-5372 in support of Project 7164 "Aerospace Protective Technology," Task 716411 "Aerospace Pressure Outfits." The study summarized in this report (NSL 67-177) was performed during the period from 15 July 1966 through 10 February 1967.

The principal investigator was Dr. R. M. Heitz, who was assisted by G. G. Brown, research assistant, both associated with the Materials Sciences Laboratory, Northrop Space Laboratories. Other contributors to this program include Dr. R. D. Johnson, Laboratory Head, Materials Sciences Laboratory; G. W. Jones, Materials Sciences Laboratory; Dr. C. F. Lombard, Laboratory Head, Biodynamics Laboratory; K. Green and J. Felder, associated with the Biodynamics Laboratory. The contract monitor for the Aerospace Medical Research Laboratories was Mrs. Lee Rock of the Altitude Protection Branch Life Support Division, Biomedical Laboratory, Aerospace Medical Research Laboratories, Wright-Patterson Air Force Base, Ohio 45433.

Some of the items compared in this report were commercial items that were not developed or manufactured to meet Government specifications, to withstand the tests to which they were subjected, or to operate as applied during this study. Any failure to meet the objectives of this study is no reflection on any of the commercial items discussed herein or on any manufacturer.

This technical report has been reviewed and is approved.

WAYNE H. McCANDLESS
Technical Director
Biomedical Laboratory
Aerospace Medical Research Laboratories

ABSTRACT

Longitudinal and circular pressure sealing closures were designed and developed for full pressure protective assemblies from a design concept provided by the Aerospace Medical Research Laboratories, invention disclosure number 66/588. This study consisted of (1) designing pressure closure devices, (2) selecting suitable materials for the fabrication of the sealing closure parts and the cylinders to include the closures, (3) selecting an appropriate fabrication process for the closure sealing parts, and (4) fabricating and testing the breadboard demonstration models containing either the circular or longitudinal closures. An EPDM elastomeric material was found to be suitable for the fabrication of the closure sealing parts which were molded using an established molding technique. The fabricated breadboard and demonstration models passed successfully the required tests wherein leak rates were determined from 0 to 5 psig, and exposure to pressure up to 12 psig, were performed.

TABLE OF CONTENTS

SECTION		PAGE NO.
I	INTRODUCTION	1
II	TECHNICAL DISCUSSION OF APPROACHES AND SOLUTIONS	2
	A. Design of the Pressure Sealing Closure	2
	1. AMRL Pressure Suit Bladder Seal Concept	2
	2. Modified AMRL Pressure Suit Bladder Seal Concept with Zipper	7
	B. Development and Fabrication of the Closure Sealing Parts and Cylinders for the Breadboard and Demonstration Models Assembly	7
	1. Selection of Suitable Materials for the Fabrication of the Cylinders	8
	2. Selection of Suitable Elastomeric Materials for the Fabrication of the Sealing Parts	9
	a. Survey of Information on Three Classes of Elastomeric Materials	9
	b. Screening of the Three Preselected Elastomeric Materials	14
	3. Selection of the Fabrication Process for the Closure Devices Sealing Parts	16
	a. Selection of process	16
	b. Fabrication of sealing parts	17
	4. Conclusions and Final Selection of a Class of Elastomeric Material	20
	5. Installation of the Pressure Sealing Closure Devices in Cylinders	20
	C. Static Testing of Assembled Breadboard and Demonstration Models	23
	1. Testing Equipment	23
	2. Tests and Results	23
III	CONCLUSIONS AND RECOMMENDATIONS	50
	A. Conclusions	50
	B. Recommendations	50
	REFERENCES	52

LIST OF FIGURES

NUMBER		PAGE
1	AMRL Pressure Suit Bladder Seal Concept	3
2	AMRL Pressure Suit Bladder Seal Concept with Zipper	4
3	AMRL Pressure Suit Bladder Seal Concept with Expandable System	5
4	Demonstration Model B	10
5	Molds for the Fabrication of the Closure Sealing Sections	18
6	Assembly of Closure Sealing System	19
7	Metal Cylinder for Assembly of the Circular Closure Sealing Sections	21
8	Sketch Showing the Details of the Assembled Closure Sealing Elements	22
9	Longitudinal Breadboard Model	24
10	Circular Closure Assembly	25
11	Longitudinal Demonstration Model	26
12	Static Test Apparatus	27
13	Closure Design in Breadboard Model A	29
14	Leak Rates of the Closures Only, Determined by Difference from the Data given in Table 2	30
15	Closure Design in Breadboard Model B	33
16	Closure Design in Breadboard Model C	34
17	Breadboard Model C after Tests	37
18	Leak Rates of the Closures Only (Demonstration Models)	38
19	Demonstration Model B Showing the Closure Device Sealed	41
20	Leak Rates of Cylinders Without Circular Closures Installed	43
21	Leak Rates of the Circular Closure A Only	44
22	Leak Rates of the Circular Closure B Only	47
23	Circular Closure Model B After Tests (In the Zipped and Unzipped Conditions)	48

LIST OF TABLES

NUMBER		PAGE
I	Longitudinal Closure Device Leak Test Results (Breadboard Models A and B)	31
II	Longitudinal Closure Device Leak Test Results (Breadboard Models A and B)	35
III	Longitudinal Closure Device Leak Test Results (Demonstration Models)	39
IV	Circular Closure Model A Leak Test Results	45
V	Circular Closure Model B Leak Test Results	49

SECTION I

INTRODUCTION

The pressure sealing closure devices currently in use in full pressure protective assemblies are expensive and have a very high failure rate due to excessive leaks. Also they do not adequately fulfill the requirement for reliability, flexibility, ease and safety of operation and sealing and mechanical efficiency. The objective of this program was to surmount these difficult problems by investigating the feasibility of a pressure sealing closure design concept.

In the development and fabrication of the pressure sealing closure device the main steps to be taken were as follows: (1) the design of the pressure closure device, (2) the selection of suitable materials for the fabrication of the sealing closure elements and the gas bag, (3) the selection of a feasible process, either extrusion or molding, for the fabrication of the closure sealing parts, and (4) the fabrication of the breadboard and demonstration models with particular consideration given to the method of installing the closure in the gas bag. Initially in the program the effort was concentrated on investigating and developing thoroughly the pressure sealing closure design concept formulated by the Aerospace Medical Research Laboratories. But, because we doubted that this concept, as such, would pass the high pressure tests, a program was also established whereby modifications of the concept were made. Particularly, improvements had to be performed on the load carrying devices to minimize the chances of separation of the closure device under pressure. For sealing efficiency of the closure parts, some modifications of the closure contour designs also had to be made.

The breadboard and demonstration models had to satisfy specific performance requirements. These requirements included leak rate measurements performed at various pressure levels in the model, such as 0 psig to 5 psig in 1/2-psig increments. If the leak rate was less than 200 cc/min at the 3.5 psig pressure level, then the model had to be subjected to higher pressures up to 12 psig. Upon surviving these higher pressures, the closure had to be opened and closed 100 times and the leak rate measured again in a similar fashion as above.

SECTION II

TECHNICAL DISCUSSION OF APPROACHES AND SOLUTIONS

To demonstrate the feasibility of the intended pressure sealing closure devices, a study program, consisting of several phases, was established. Each phase elaborates the approaches and solutions taken toward developing pressure sealing devices and subsequent static testing.

A. Design of the Pressure Sealing Closure

In the design stage of the sealing closure system it was important to consider the closure contours of the seal, and the components involved in the devices carrying most of the load when the closure system was exposed to high pressures. Proper sealing angles of the closure contours had to be selected to assure a good seal. In addition, the closure contours had to be low in bulk and weight, be easy to operate and be able to carry some of the pressure load.

The pressure sealing closure device formulated by the Aerospace Medical Research Laboratories was the starting base for this program. Figure 1 illustrates this concept. Other pressure sealing closure device alternatives were suggested for investigations. For instance, two of these alternatives are given in figures 2 and 3. Each concept was so designed as to give the best performance under the conditions of this program.

1. AMRL Pressure Suit Bladder Seal Concept

As had been anticipated, this concept could not pass this program's requirements mainly because the pressure load-carrying elements were of insufficient strength to withstand the high pressure exposure. This was demonstrated in actual tests (see Section II-C).

To meet this program's requirements, the closure devices had to overcome pressures as high as 12 psig. This meant that, for instance, in the case of the longitudinal closure device which, when installed in a cylinder approximately 24 inches in diameter and 36 inches long, had to overcome at the 12 psig gas pressure mark, a hoop tension of:

$$\frac{Pd}{2} = \text{pounds/in.}$$

P = pressure within the cylinder in psig

d = diameter of the cylinder

that is,

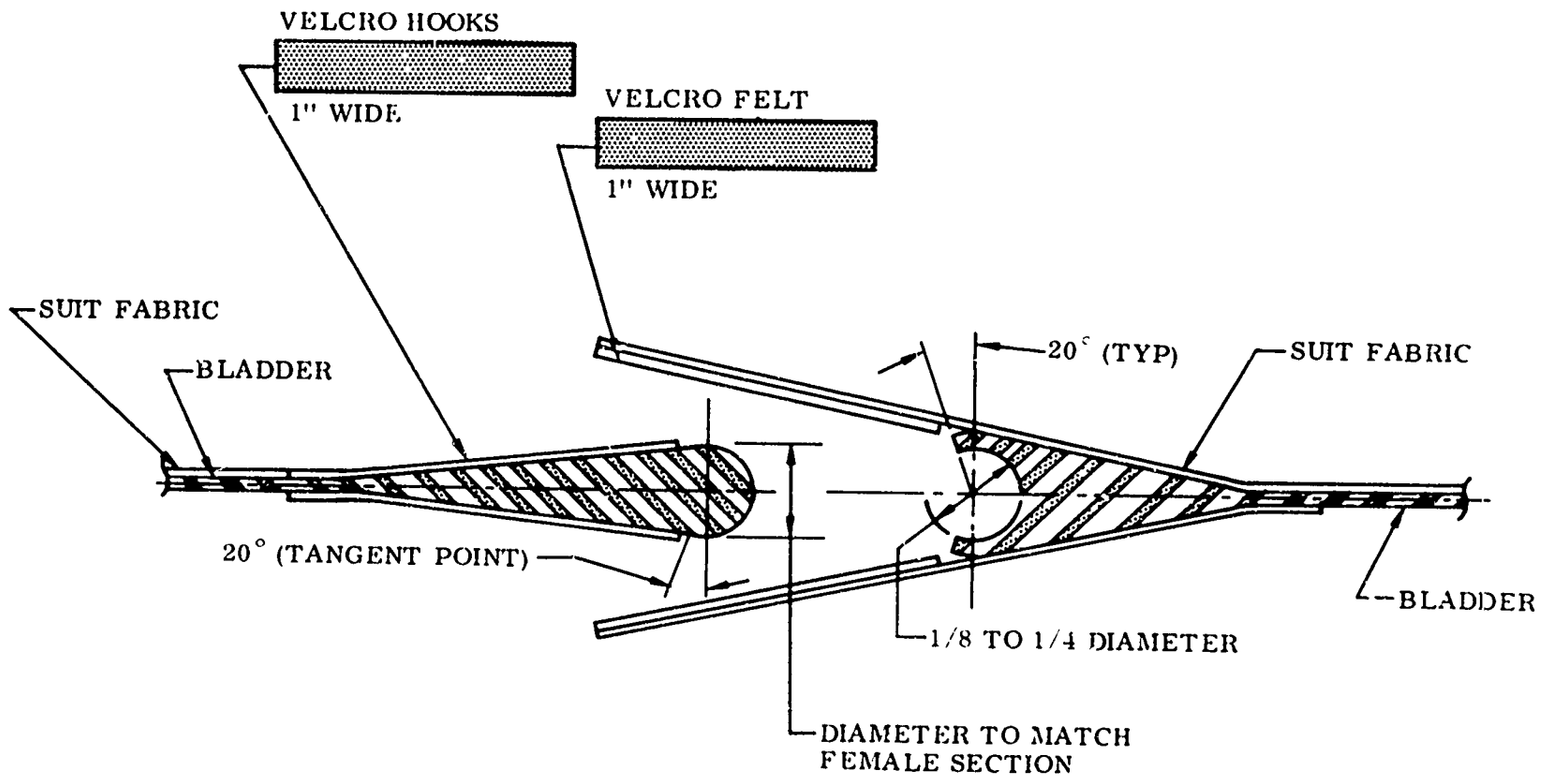

FIGURE 1 AMRL PRESSURE SUIT BLADDER SEAL CONCEPT

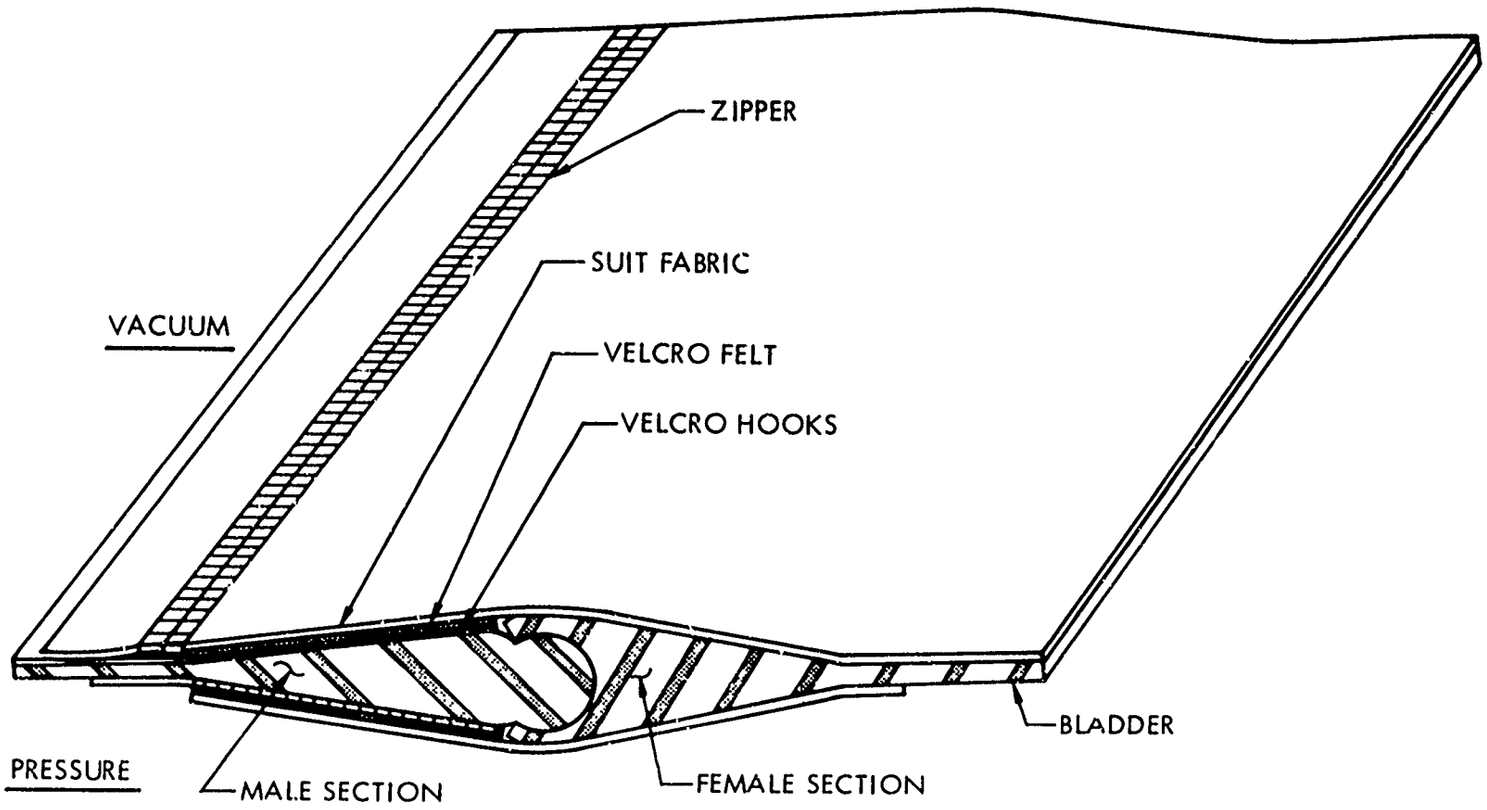

FIGURE 2 AMRL PRESSURE SUIT BLADDER SEAL CONCEPT WITH ZIPPER

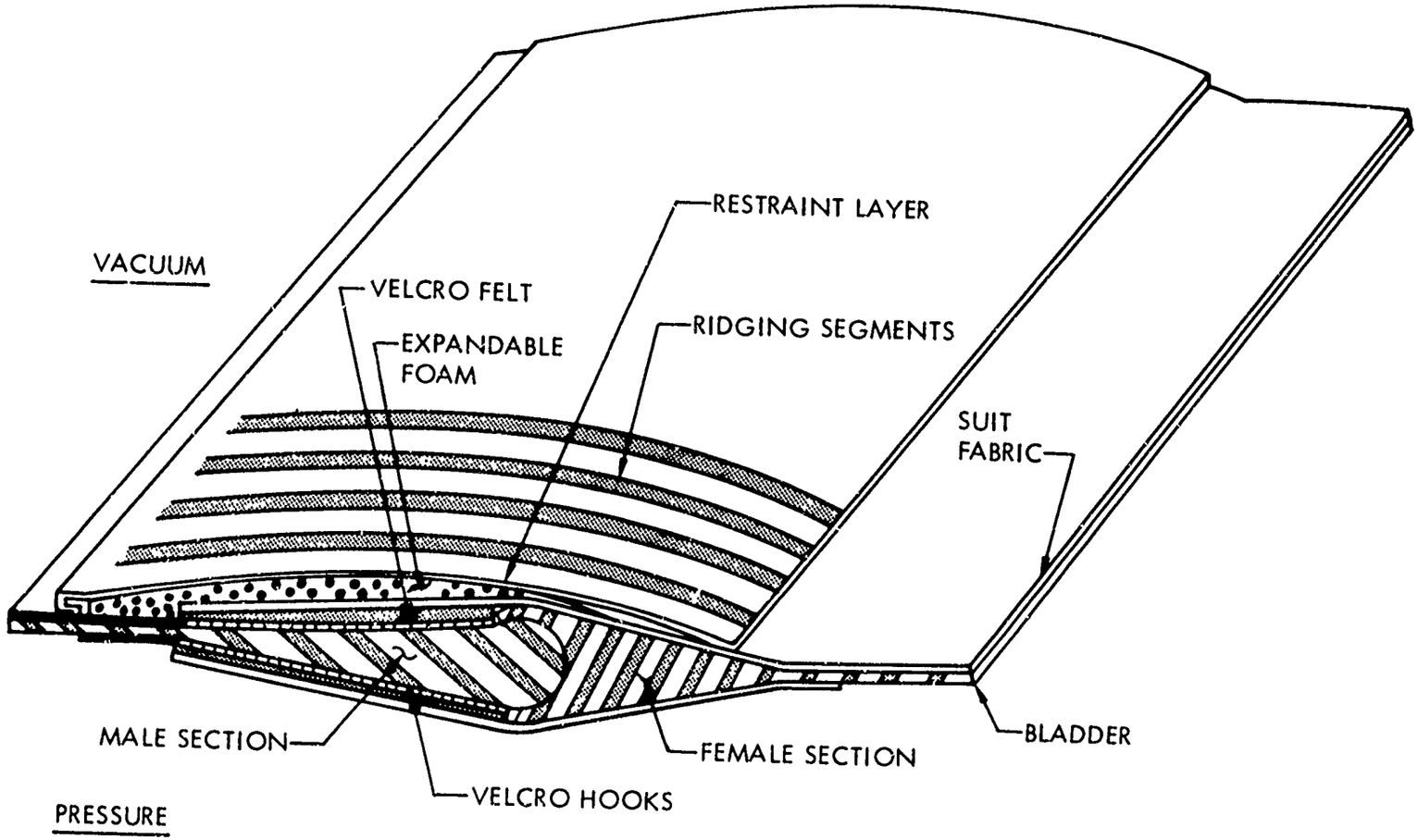

FIGURE 3 AMRL PRESSURE SUIT BLADDER SEAL CONCEPT WITH EXPANDABLE SYSTEM

$$\frac{12 \times 24}{2} = 144 \text{ pounds/in.}$$

assuming that the cylinder had not stretched at this pressure. Nevertheless, in reality, the diameter of the cylinder increased as the pressure increased which obviously resulted in much higher hoop tensions.

The cylinder also had to overcome a minimum longitudinal pressure of:

$$\frac{\pi r^2}{\pi d} \times P = \text{pounds/in. of fabric}$$

P = pressure within the cylinder in psig

d = diameter of the cylinder

r = radius of cylinder

that is,

$$\frac{\pi \times 144}{\pi \times 24} \times 12 = 72 \text{ pounds/in.}$$

Comparatively, in the case of the circular closure device of approximately 5 inches in diameter and installed in a cylinder of the same diameter and 24 inches long, the closure had to withstand at the 12 psig gas-pressure mark, a minimum axial tension of:

$$\frac{\frac{\pi d^2}{4} \times P}{\pi d} = \frac{\frac{\pi 5^2}{4} \times 12}{\pi 5} = 15 \text{ pounds/in.}$$

P = pressure within the cylinder in psig

d = diameter of the cylinder

and a minimum longitudinal hoop tension of:

$$\frac{\pi r^2}{\pi d} \times P = \text{pounds/in. of fabric}$$

that is,

$$\frac{\pi \times 6.25}{\pi \times 5} \times 12 = 15 \text{ pounds/in.}$$

Available Velcro® attachments (recommended as load-carrying elements) could not hold under the high gas pressures up to 12 psig without affecting seriously the sealing efficiency of the longitudinal and circular closures under study. As described in Section II-C, the highest

strength available Velcro® fasteners were ripped apart in the case of the longitudinal closure before the leak rate measurements had been completed up to 5 psig gas-pressure. Regarding the circular closure device, even though the Velcro® segments were not pulled apart during the leak rate measurements, their degree of slippage was such that it separated the closure sealing parts and made the closure fail.

To increase the efficiency of the pressure load-carrying elements of the AMRL pressure suit bladder seal concept, a modification was accomplished in its design.

2. Modified AMRL Pressure Suit Bladder Seal Concept with Zipper

This concept, as shown in figure 2, retains the AMRL sealing system to which a zipper is added which becomes the main pressure load-carrying element. Also the 20° inclination angle, as shown in figure 1 on the female section, was changed to 60° for the purpose of increasing the sealing efficiency of the sealing parts.

An important factor in the success of this concept was to properly install the zipper in relation to the sealing closure parts. This was done in such a way as to prevent any slippage of the Velcro® fasteners before full stretching of the zipper fabric was reached. The full pressure load was then carried by the zipper. Thus the function of the Velcro® fasteners is to position the sealing components and carry the initial pressure load and keep the sealing sections sealed until the zipper takes over the full load.

As is demonstrated in the leak rate measurements and high pressure tests (Section II-C), this sealing closure design was highly successful and illustrated the feasibility of such a concept for full pressure protective assemblies.

B. Development and Fabrication of the Closure Sealing Parts and Cylinders for the Breadboard and Demonstration Models Assemblies

Prior to the fabrication of the closure sealing parts and of the cylinders, surveys of information were conducted on possible suitable materials. Three surveys of information were performed. Initially, a survey was conducted on materials for the bladder and restraint outer cover. This was followed by a survey on materials for the fabrication of the sealing parts. Finally, a survey was conducted covering the selection of the fabrication process for the closure sealing parts.

The three mentioned surveys followed by the fabrication of the required items, were performed simultaneously and are elaborated below in separate sections.

1. Selection of Suitable Materials for the Fabrication of the Cylinders

The selection of these materials was straightforward inasmuch as the types had been spelled out by the Air Force at the start of the program. Nevertheless, caution had to be taken in making the selection within these types of materials. From a thorough screening, the following materials were selected.

a. Bladder Material

- Flexfirm® No. 36231 gray type 1, class 3 neoprene coated nylon.

  Grab breaking strength, lbs/in = warp 120

  Grab breaking strength, lbs/in = fill 100

  Tearing strength, lbs/in = warp 12

  Tearing strength, lbs/in = fill 10

- Black NN 5934-2 (10-1/2 oz.) neoprene coated nylon.

  Grab breaking strength, lbs/in = warp 210

  Grab breaking strength, lbs/in = fill 190

  Hydrostatic, lbs/in = 325

  Mullen burst, lbs/in = 390

b. Outer cover and restraint fabric, Nomex® nylon HT-10-41

Tensile strength, lbs/in = warp 464

Tensile strength, lbs/in = fill 390

Tear strength, lbs/in = warp 20

Tear strength, lbs/in = fill 14.5

Elongation, % = warp 33

Elongation, % = fill 25

c. Velcro® Fasteners

Velcro® No. 80 coated on the bonding side by Velcro® No. 45 adhesive. The Velcro® hooks have a shear strength of 9 psi.

d. Fabrication of Cylinders

Because the program requirements were to experimentally evaluate the proposed sealing closure devices in a longitudinal and in a circular geometry, different cylinders had to be fabricated.

Initially, two 24-inch diameter cylinders 12 inches in length, were assembled for preliminary testing of the suggested longitudinal closure design concepts. The circular closures were tested in a 5-inch diameter, 24-inch long cylinder. These breadboard assemblies, either containing the longitudinal or circular closure, were used repeatedly by the cutting out and replacement by stitching and cementing of parts tested. Finally, the best closure design, picked from the preliminary tests and molded from EPDM rubber, was installed in a 36-inch long, 24-inch diameter demonstration cylinder. Thus, from the above procedure, a minimum of four cylinders had to be fabricated.

Using the above bladder material, the bladders were assembled by established bonding techniques. A series of bonding agents was tested and the "Stabond® T-161" bonding agent gave the best seal. Each cylinder had cemented grommets in their upper surface for the installation of a pressure gauge and flowmeter. In the bonding process, at least two drying days were allowed prior to leak and pressure tests.

No bonding compounds were used in the assembly of the outer cover and restraint. Only sewing techniques were applied for shaping the fabric into the bladder's envelope. In the case of the 36-inch long, 24-inch diameter demonstration cylinder, special reinforcement procedures were utilized, as it is partially shown in figure 4. The reason for this is discussed in Section II-C. For each cylinder, two rows of stitching using No. 24 Dacron® thread were employed for all the fabric seams.

To prevent the bladder from being stretched extensively when under pressure, its volume was 10 percent larger than the outer cover. Before installing the closure device into each cylinder, the cylinder assemblies consisting of the bladder and the outer cover were pressure and leak tested. The results of these tests are given and discussed in Section II-C.

2. <u>Selection of Suitable Elastomeric Materials for the Fabrication of the Sealing Parts</u>

In the selection of an elastomeric material for the fabrication of the closure sealing parts, several factors had to be considered, (a) sealing efficiency, (b) flexibility, (c) strength, (d) moldability, and (e) weight. During this program three classes of materials were investigated, that is fluoroelastomer (Viton® A), chlorosulfonated polyethylene (Hypalon®), and ethylene-propylene-diene rubber (EPDM). All three materials were available commercially.

a. Survey of Information on Three Classes of Elastomeric Materials

The survey of information on the above-mentioned three classes of elastomeric materials was conducted in such a way as to

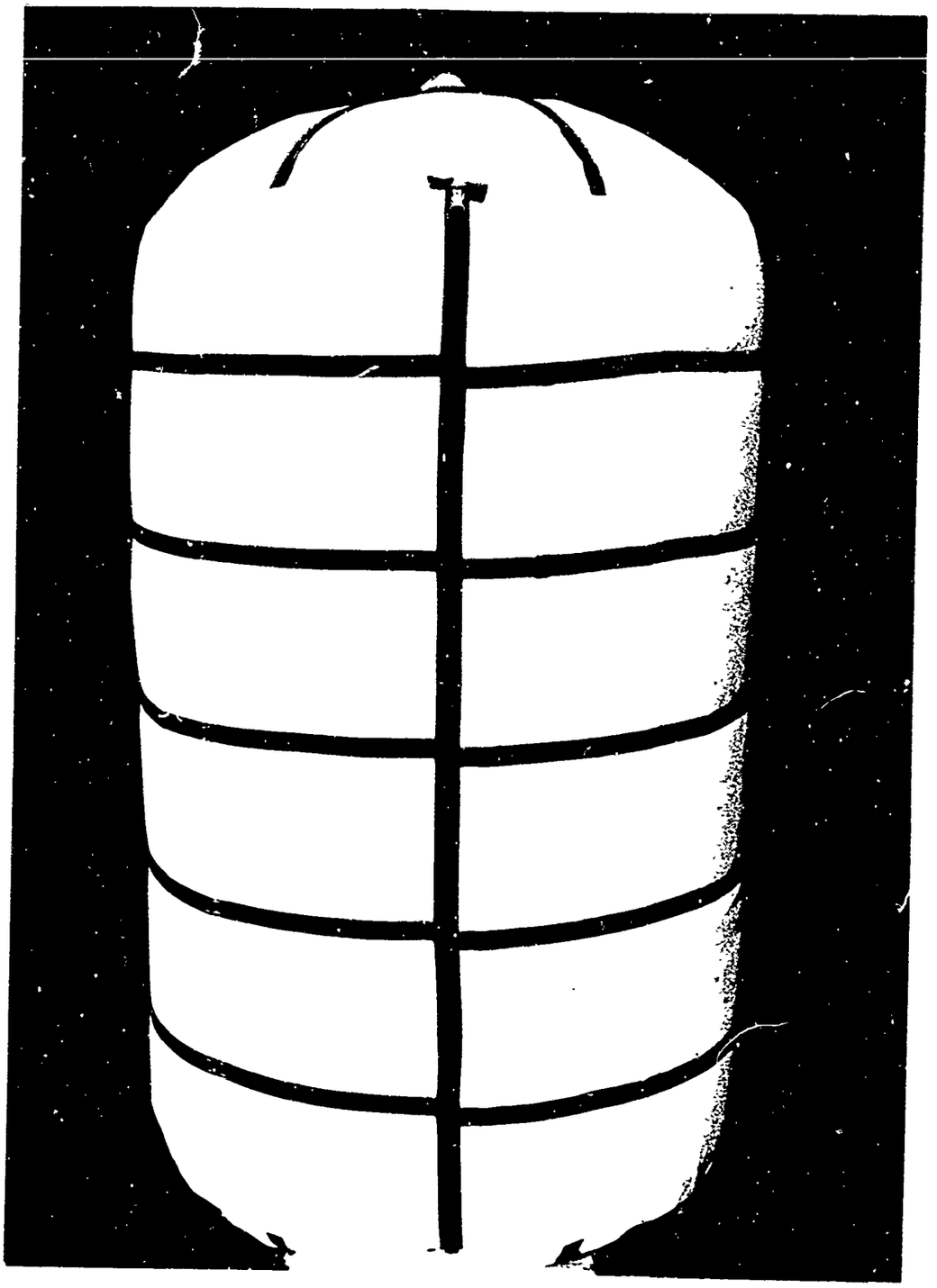

FIGURE 4 DEMONSTRATION MODEL B

(1) screen potential organizations carrying these materials, (2) screen the individual raw materials from each organization selected, (3) evaluate the existing compounding formulations or their possible modifications thereof using the screened raw materials, and (4) check possible application of commercially compounded raw rubber stocks.

Because it was learned during this survey that no industrial organization had precompounded rubber stocks which could be used for this program's applications, it was necessary to formulate and compound the rubber stocks ourselves. A brief description of the basic materials technology is given below for each of the three classes mentioned.

Viton® A - Chemically, Viton® A is a copolymer of Vinylidene Fluoride and Hexafluoropropylene (Ref. 1). It is a light colored, translucent material. By mixing it properly (using the rubber mill) with fillers, acid acceptors, curing agents and plasticizers, uncured rubber stocks are obtained which, upon a press cure and an oven cure at elevated temperature, will furnish excellent quality elastomers. In varying the type and amount of filler, acid acceptor, curing agent and plasticizer, as well as the curing conditions, the physical properties can be changed.

A wide variety of fillers, such as carbon black and mineral fillers, can be used. In addition to improving processing smoothness and reducing nerve, fillers increase modulus, reduce elongation, and increase the hardness of the Viton® A vulcanizates. The amount of filler used in the compounding is of importance for the purpose of controlling the stiffness of the cured elastomer.

The acid acceptors used are either metallic oxides or salts. They serve as acceptors for any small amounts of acidic materials that may be given off at the high temperatures. Magnesium oxide is one of the suitable acceptors which confers to the Viton® the best properties. The type or grade of magnesium oxide used is extremely important to the final properties obtained. The choice of type depends on the type of properties needed.

Regarding the curing agent (Ref. 2,3) three general types of agents can be used: polyfunctional amines, peroxides, and high energy radiation. A wide variety of polyamines will cure Viton® A. Some of the amines considered were hexamethylenediamine carbamate and N,N'-dicinnamylidene-1,6 hexanediamine. The choice of the amine will depend upon the choice of the acid acceptor. Among the peroxide curing agents that cure Viton® A, straight benzoyl peroxide stands out. In general, peroxide curing systems, by themselves, are too prone to scorch to be practical but, in combination with a copper inhibitor, they can be made very safe during processing. Finally, the third curing agent which can be used is radiation. By exposure to high intensity beta or gamma radiation, a high state of cure can be developed. A beta-radiation dosage of 1×10^7 REP

in a Van de Graff generator followed by heating at 400F to 450F yields physical properties comparable to those obtainable with benzoyl peroxide. Among the three types of curing agents, the polyamines would supply Viton® A elastomers having the best physical properties.

The purpose of using a plasticizer in a compounded Viton® rubber stock is mainly to aid the processing. Plasticizers, such as dioctyl sebacate or tricresyl phosphate, when used in certain proportions, will cut the Mooney viscosity of the Viton® stock in half. The quantity of plasticizers used in Viton® A should be kept to a minimum (5 parts per hundred or less), since larger amounts generally have an adverse effect on vulcanizace properties and resistance to deterioration.

Hypalon® - In regard to the second class of elastomeric materials under consideration, Hypalon® is chemically a chlorosulfonated polyethylene (Ref. 4,5,6,7). There are several types of Hypalon® available on the market. Each type differs from another in the chlorine and sulfonyl content and distribution of the sulfonyl chloride groups on the polyethylene monomer chain can be either branched or linear. The sulfonyl chloride groups are highly reactive and contribute directly to the cross-linking of this class of elastomeric material. A great variety of compounds that react readily with these groups to form tightly cured elastomers are known. The most widely used cross-linking systems involve the use of metal oxides in the presence of a sulfur containing rubber accelerator. The metal oxide used most currently is the magnesium oxide which acts as an acid acceptor. The accelerator giving the best results to date is dipentamethylene thiuram hexasulfide (Tetrone® A). Another essential component in the cross-linking systems is an organic acid such as abietic acid or derivatives thereof which are most commonly known as hydrogenated wood rosin.

The components enumerated above, when properly mixed with the base polymer (Hypalon®) and exposed to the proper conditions, will provoke a series of chemical reactions leading to the cured elastomer. These reactions will not be discussed here. As in the case of the Viton® elastomer, fillers are used to improve processing smoothness, increase modulus, reduce elongation, and increase the hardness. A large variety of fillers can be used. For instance, for black products, carbon black is used and, for white products, calcium carbonate is used.

EPDM - The third class of elastomeric materials designated EPDM is a terpolymer and is based on ethylene, propylene, and a controlled amount of diene such as cyclopentadiene (Ref. 8). This unsaturation in the terpolymer permits suful vulcanization. Normally 50 parts of ethylene and 50 parts of propylene and 1 to 3% of the diene are used in the formulation. In the polymerization process alkane solvents, such as heptane,

are used. A typical catalyst could be one derived from either trialkylaluminum or dialkylaluminum halide combined with either vanadium oxytrichloride or tetrachloride. Because of the diene content in the base polymer, sulfur can be used as the curing agent leaving no residual odor. For that reason the terpolymers are presently favored over the copolymers (EPR) in commercial products.

Regarding the other ingredients in the compounding of EPDM, accelerators, such as 2-mercaptobenzothiazole and tetraethylthiuram monosulfide and activators, such as zinc oxide and stearic acid are considered as essential components. The activators are present to promote the curing reaction by the formation of soap which in turn activates the accelerators. The role of the sulfur accelerators in the curing process is the formation of sulfur cross-links. Another important ingredient in the compounding of EPDM is the filler. As in the cases of Hypalon® and Viton® the filler is used to improve the processing smoothness, increase modulus, reduce elongation and increase the hardness. Similarly, a large variety of fillers can be employed here, as for instance, carbon blacks or calcium carbonate.

Sometimes it is necessary to change the Mooney viscosity of the rubber stock for easing its processability, such as in molding or extrusion. A high Mooney viscosity can be lowered by using a large variety of plasticizers, such as petroleum plasticizers. The amount of plasticizer used has to be kept within limits inasmuch as the cured properties of the compound will be affected. Also, the viscosity of the plasticizer used will have a noticeable effect on the cured properties. The class of petroleum plasticizer seems to make very little difference in the ultimate physical properties of a compound.

When comparing the three classes of elastomers, all three possess excellent physical properties and would be suitable for the application in question. However, some differences exist between the three that could be a deciding factor for their selection. For instance, EPDM has the lowest specific gravity, the lowest price and is the easiest to process, but it is not the easiest to bond. Viton® A has the highest specific gravity, the highest price, and is the most difficult to process. However, it has a very low permeability to gases. Hypalon® is somewhere in between.

The raw materials for the compounding and the preparation of the elastomeric materials were obtained from commercial sources.

A preselection of raw materials within a class of material was accomplished. In the fluoroelastomer class, Viton® A was selected over Viton® A-HV and Viton® B for the reasons that Viton® A-HV is more

difficult to process and Viton® B is used mostly where high heat and fluid resistance is necessary. In the Hypalon® class, Hypalon® 40 was selected for the reason that it processes more easily than the other Hypalon® types and its vulcanizates have better physical properties, higher tear strength, high compression set, and oil, abrasion, and flame resistance. Because of this outstanding balance of properties, Hypalon® 40 is generally preferred for molded, extruded and calendered goods.

In the EPDM class of material, two types of base polymer were selected. These two types are available under the commerical designations, Royalene® X-1317 and Royalene® 400.

b. Screening of the Three Preselected Elastomeric Materials

In a first screening step of the raw materials obtained from industrial organizations, compounding and curing tests were performed. During these tests a series of formulations, either taken from the literature or established by NSL, were tried. Also compounding and curing techniques were investigated giving the most satisfactory and suitable elastomeric compounds. The formulating, the compounding and the curing steps were guided by the physical properties that the elastomer had to possess to satisfy their performance in the sealing closure devices under study. For instance, the following properties had to be taken into consideration: stress-strain (modulus, tensile, elongation); hardness; flexure; compression set; ability to bond to other materials; oil, chemical, solvent and ozone resistance; resiliency; low permeability to gases; abrasion resistance; tear strength; and toxicity. Other properties such as resistance to low and high temperatures were also considered.

From the above, formulations were established for each class of materials. The compounding was performed by using a rubber mill. Compounding techniques were developed to obtain the smoothest uncured rubber stock possible. These techniques varied for each class of material. The rubber stocks obtained were press cured to 6-inch x 6-inch by 1/8 inch sheets. In the case of Viton® and EPDM, oven post-curing was conducted to bring the curing action to completion and to eliminate noxious odors, particularly in the case of EPDM. All three cured materials were checked for their properties. Qualitatively, in general, all exhibited good properties for the intended application. The quality of the elastomers varied as the formulations were varied. Among the formulations investigated, the ones given below were considered to be the best. The elastomeric material obtained from these formulations had excellent physical properties for each class of material.

Viton® A Formulation

Viton® A (base polymer)	100	parts
Carbon black (Cabot type) filler	20	parts
MgO (Maglite® D)	15	parts
Diak No. 3 (N,N'-dicinnamylidene-1,6 hexanediamine) curing agent	2.5	parts
Tricresyl phosphate (plasticizer)	10	parts

The rubber stock was press cured for 30 minutes at 300F and post-cured for 28 hours at 400F.

Hypalon® 40 Formulation

Hypalon® 40 (base polymer)	100	parts
Carbon black (Cabot type)	20	parts
Staybelite® resin (organic acid)	2.5	parts
Tetrone® A (accelerator)	1	part
MgO (Maglite® Y)	30	parts

The rubber stock was press cured for 40 minutes at 293F.

EPDM Formulation

Royalene® X-1317 (base polymer)	100	parts
Carbon black (SRF type)	50	parts
ZnO (activator)	5	parts
Stearic acid (activator)	1	part
2-mercaptobenzothiazole disulfide (MBTS) accelerator	0.5	part
Tetraethylthiuram monosulfide (TUEX) accelerator	1.5	parts
Sulfur (sublimed) curing agent	1.5	parts
Cyclolube® 138 (plasticizer)	10	parts

The rubber stock was press cured for 15 minutes at 320F and post-cured for 1 hour at 320F.

In each above case the Shore A hardness of the cured material was between 65 and 70. To facilitate the compounding of the EPDM, the rubber stock was milled at approximately 150F. The stearic acid and the cyclolube helped smooth the rubber stock and develop an acceptable bank.

From this first screening step, through formulating, compounding and curing, all three classes of elastomeric materials investigated showed

excellent properties when employing the proper formulations and compounding and curing conditions.

In a second screening step, the suitability of the same elastomeric materials to adapt themselves either to extrusion or molding processes, was investigated. This step is discussed and illustrated below in a separate section.

3. Selection of the Fabrication Process for the Closure Devices Sealing Parts

a. Selection of Process

Prior to the fabrication of the closure sealing parts, a survey of information was conducted on fabrication processes through manufacturing organizations (Ref. 9,10,11,12). Initially, two processes were under consideration, (1) molding, and (2) extrusion. Several mold fabricators and rubber extruding organizations were contacted to establish the most feasible process which should be used for the fabrication of the parts in question. In the investigation several factors were considered: (1) suitability of the rubber stock to the process, (2) practicability, (3) ease of fabrication, and (4) price. From the two processes mentioned, the most practical and suitable one was the molding process. However, regarding the price, for instance, the most ideal molding process, whereby the molding of the sealing parts (female and male) would have been performed in one piece each, exceeded by a large margin the allowable expenses for this program. Thus, because of the price factor, the ideal molding process had to be eliminated and the extrusion process was then investigated.

An extended amount of time was spent on locating an extruding company who would attempt to fabricate the closure sealing parts through an extrusion process. The company was supplied with two 30- and 35-pound batches of uncured rubber stocks (Hypalon® and EPDM). These large amounts of rubber stock were necessary for the preliminary extrusion tests and final fabrication of the closure sealing parts. The formulations used for the compounding were identical to the ones mentioned earlier for Hypalon® and EPDM rubber compounds. Also at this stage, the Viton® A rubber compound was eliminated as a contender for the reasons that it extrudes very poorly and its price is very high.

Preliminary extrusion tests conducted by the selected extruding company were not very encouraging inasmuch as they did not succeed or they were not able to obtain suitable extruded parts. In discussing the problems with the company we learned that proper extruding conditions were not employed. Because of these difficulties the services of the extruding company was discontinued and the extrusion effort terminated. An alternative method based on a simplified compression molding technique

was then employed. The designed and fabricated molds are shown in figure 5. The molds were designed and fabricated as per the pressure sealing closure design concept formulated by AMRL. As shown in figure 5, each section (female and male) was molded in two symmetrical halves that were then bonded together to form either the female section or the male section.

b. Fabrication of Sealing Parts

The molding of the closure sealing parts, using the molds shown in figure 6, was performed at Northrop Ventura Division's Manufacturing Plant (Thousand Oaks, California) where a 36-inch by 36-inch press could be employed. Preliminary molding tests showed very encouraging results and we decided to perfect this method and to use it for the fabrication of the closure sealing parts.

From the preliminary molding tests we found that to obtain the best molded parts, the following molding technique should be used:

(1) From the uncured rubber stock, roll out (on the rubber mill) thin strips 3/16 in. x 2-in. x 32-in.

(2) Clean the mold and grease with a silicone releasing agent.

(3) Place uncured rubber in the mold and cover with a top plate that is guided to the mold by metal pins.

(4) Place mold assembly in the press that is preheated to 320F and lower upper press platen until the pressure gauge indicates 1600 psi. This last operation should be performed in a minimum length of time (1 to 2 minutes).

(5) The pressure and the temperature indicated above are kept constant for approximately 30 minutes, prior to cooling to 125F.

(6) After cooling, the pressure is released and the molds removed from the press. The top plate of the mold is lifted and the completed molded part is taken from the mold.

Using this molding procedure, the molded parts obtained showed smooth contours and good tolerances, and no voids were detectable. Both uncured rubber stocks, Hypalon® and EPDM were used for comparison of both classes of elastomeric materials.

Figure 6 illustrates the way the longitudinal pressure sealing closure device sealing parts were assembled. Prior to bonding the female half-sections, obtained from the molding operation, the 60° inclination was cut as shown on the figure. The bonding agent used for bonding the parts was "Stabond® T-161." The drying time allowed was 2 days, then

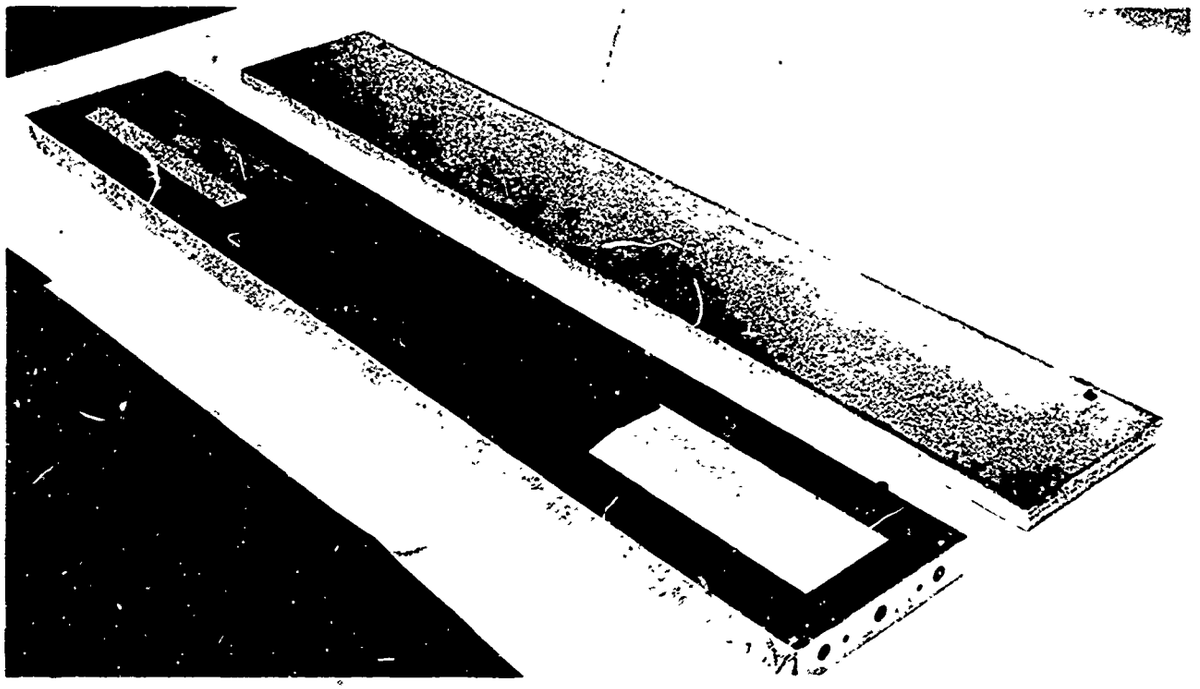

MALE

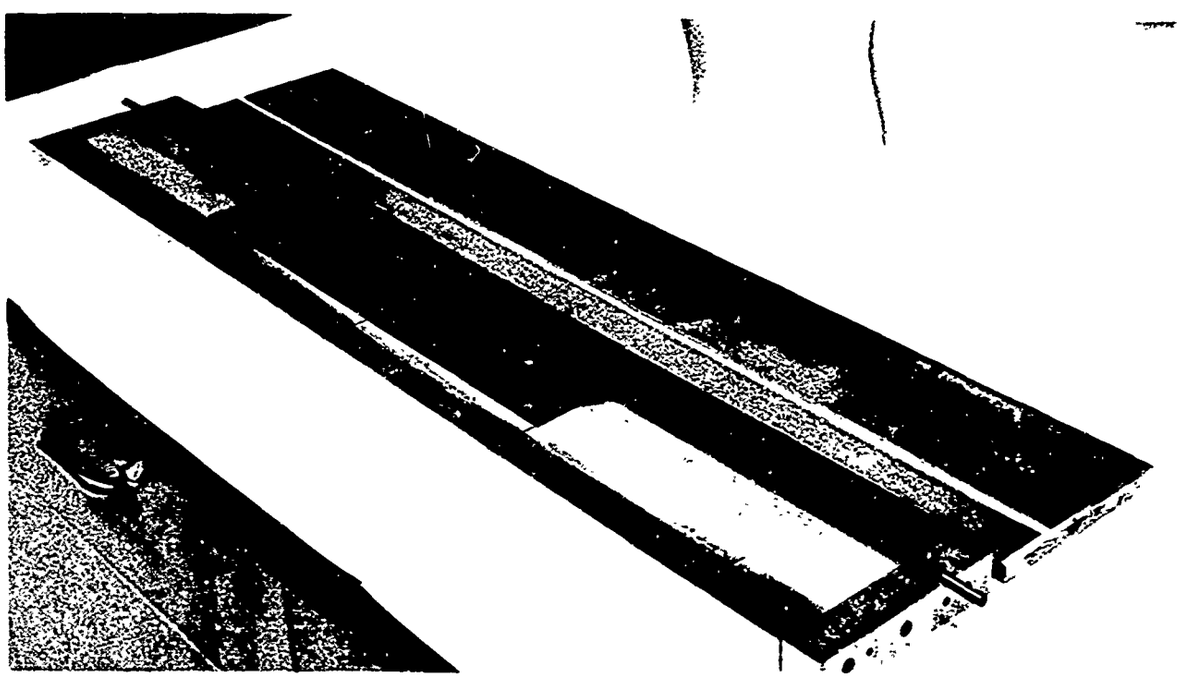

FEMALE

FIGURE 5 MOLDS FOR THE FABRICATION OF THE CLOSURE SEALING SECTIONS

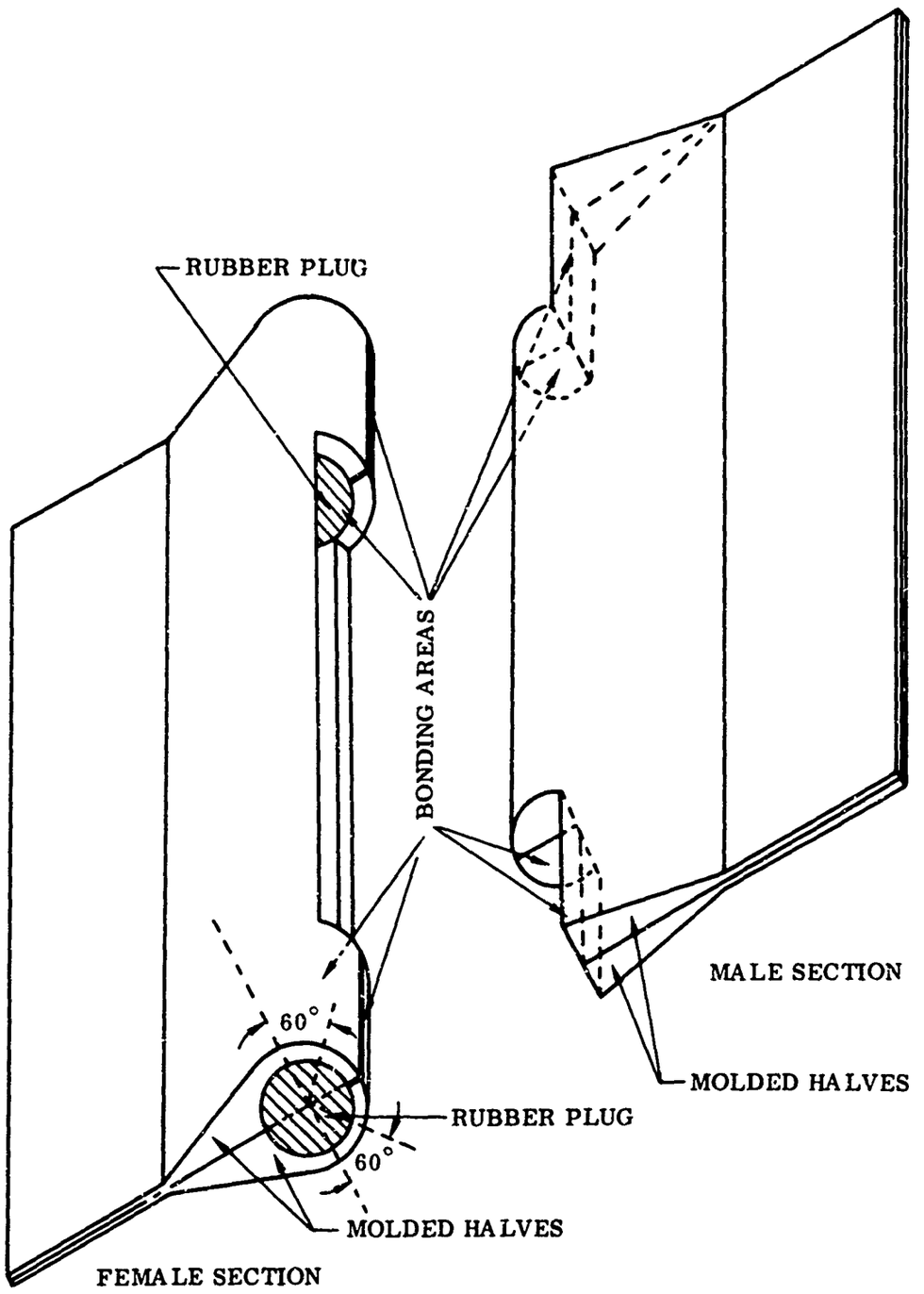

FIGURE 6 ASSEMBLY OF CLOSURE SEALING SYSTEM

the sealing contours of the female and male sections were polished with a fine sandpaper to a smooth finish.

For the assembly of the circular pressure sealing closure device sealing parts, a metal cylinder, figure 7, was used. The upper part of the cylinder is so machine that it conforms to the outer contours of the female molded half-section. The lower part of the cylinder is so machined that it conforms to the contours of the male molded half-section. In the actual assembly procedure of the circular closure sealing parts, the half-sections are placed in their respective form. In each case, the two extremities of the half-sections are bonded together to form a complete circle. On top of each circle, the second symmetrical half-section is in turn bonded to the first half-section to form the completed female and male circular sealing sections. The bonding of the two halves is performed in such a manner as to overlap the bonded extremities of the first half-section by the second half-section. This was done to reinforce the strength of the closure sealing parts. Similar to the longitudinal closure, Stabond® T-161 bonding agent was used in the bondings.

To complete the assemblies of the closure sealing parts before installation in the cylinders, the Velcro® parts were bonded on only one side of the sealing sections (female and male). This is the inner side of the closure as illustrated in Section B-5 below. The Velcro® parts were positioned and bonded as shown in figure 8. The Velcro® hooks were bonded directly to the male sealing section and the Velcro® felt was bonded to the restraint fabric (HT-10-41) which, in turn, was bonded to the female sealing section. Upon sealing the closure, the Velcro® parts are pressed together and are able to carry some of the pressure load.

4. Conclusions and Final Selection of a Class of Elastomeric Material

From the different steps taken in the selection of suitable elastomeric materials for the fabrication of the closure sealing parts, the followingcan be stated. Based on (a) the survey of information through industry, (b) the screening of the three preselected elastomeric materials, through formulating, compounding, curing and physical properties determination of the end product, (c) the ease of moldability of each class of elastomer, and (d) the performance of the molded rubber parts when used as the sealing parts in the closure devices, the EPDM rubber was considered as the best overall elastomeric material when used for this specific application.

5. Installation of the Pressure Sealing Closure Devices in Cylinders

To satisfy this program's requirements, one breadboard model containing an 8-inch long closure device, one breadboard model containing

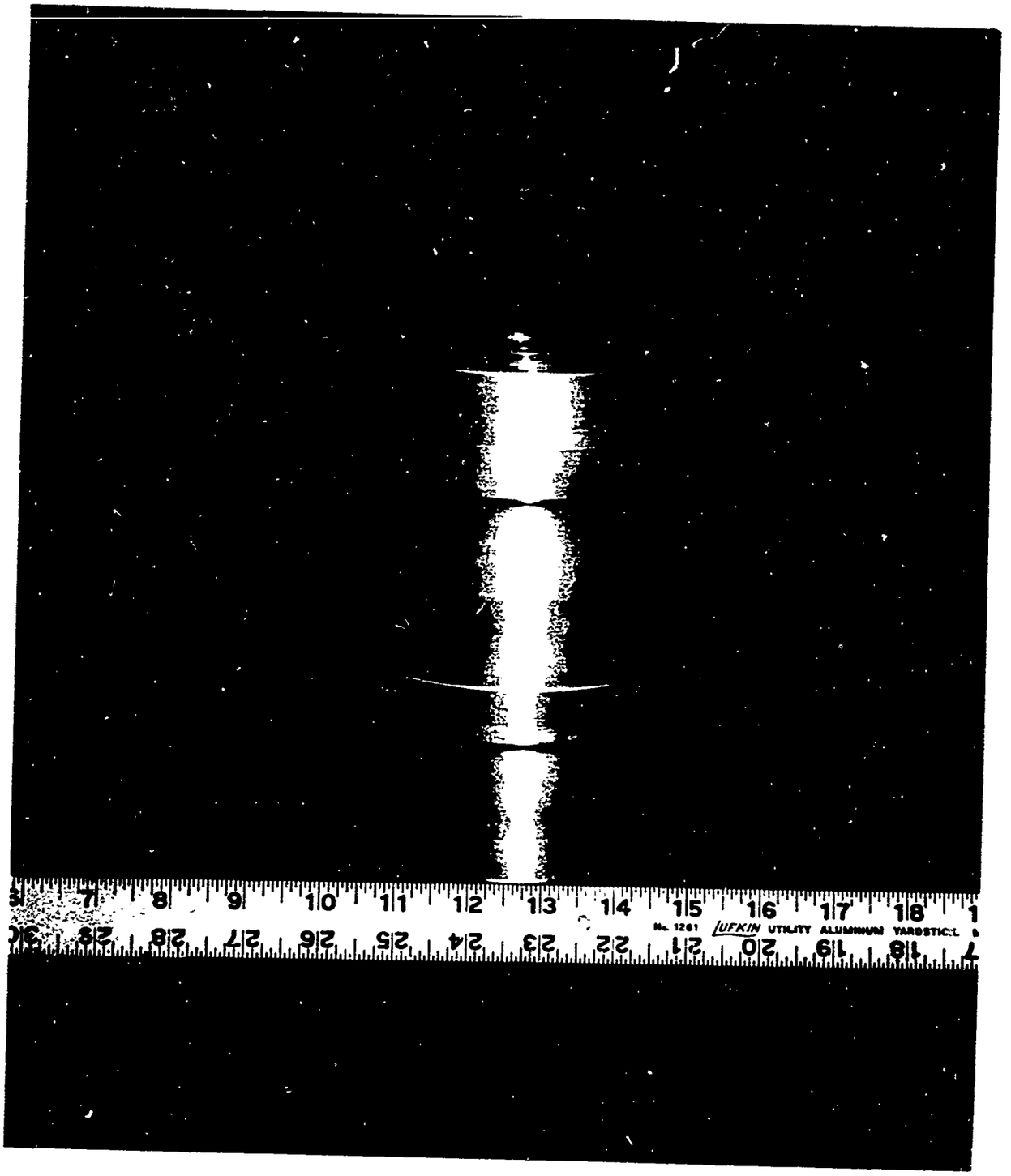

FIGURE 7 METAL CYLINDER FOR ASSEMBLY OF THE CIRCULAR CLOSURE SEALING ELEMENTS

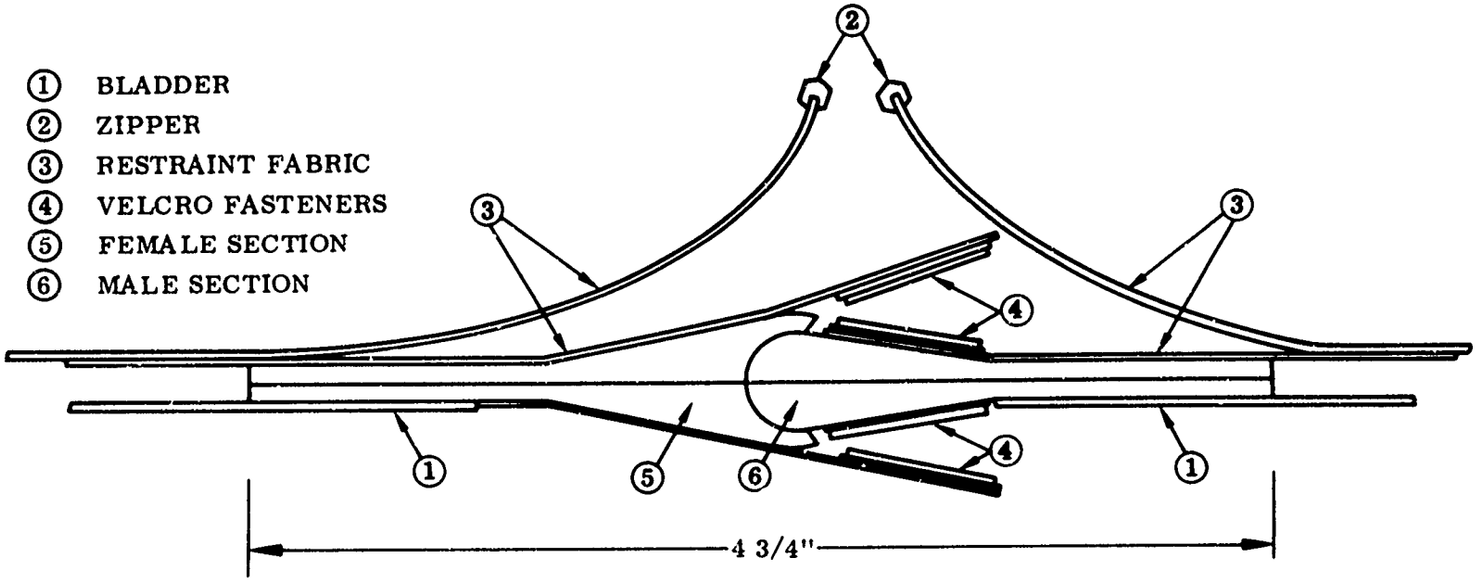

FIGURE 8 SKETCH SHOWING THE DETAILS OF THE ASSEMBLED CLOSURE SEALING ELEMENTS

a 5-inch diameter circular closure, and one demonstration model containing a 30-inch long closure, was fabricated. Figures 9, 10 and 11 show the configurations of the assembled models and the closure sealing parts.

The procedure to assemble these models, using the fabricated cylinders (refer to Section B-1) and the assembled sealing parts (refer to Section B-3b), was very similar in all cases. For instance, the procedure used to assemble the demonstration model was as follows: After leak testing the cylinder without the closure installed (see Section II-C "Static Testing"), the assembled 30-inch long closure device is bonded longitudinally in a sealed position to the inflated bladder. The bonding agent Stabond® T-161 is allowed to dry at least 2 days before the sealing closure is opened and an approximately 30-inch longitudinal slit is performed in the bladder inside the closure. The bladder, partially deflated and with the closure device installed, is inserted into the restraint outer cover and positioned so that the closure device assembly will coincide with the longitudinal opening in the outer cover. The grommets in the upper surface of the bladder are inserted through the fabric and installed. The outer cover fabric is bonded to the closure sections to which fabric the Velcro® parts are in turn bonded as shown in figure 8.

In the case of the "AMRL Pressure Suit Bladder Seal Concept with Zipper," the zipper was installed by sewing, as shown in figure 8, and positioned as discussed earlier in Section A-2.

C. Static Testing of Assembled Breadboard and Demonstration Models

1. Testing Equipment

A 6-foot diameter and approximately 12-foot long vacuum chamber was used as a safety device against blowouts. The static test equipment was mounted within and outside this chamber as shown in figure 12.

2. Tests and Results

Using the above-described test equipment, the following test procedure was adopted for all closure sealing models.

In a first step, leak and pressure tests were conducted on the cylinders not containing the closure devices. The model was placed in the chamber and connected to the nitrogen source and flowmeter line and to the pressure gauge line. The pressure inside the cylinder was increased from 0 psig to 5 psig in 1/2-psig increments. At each 1/2-psig increase, a leak rate (in cc/min.) was determined. The time necessary to perform this leak rate determination depended upon the size cylinder tested. For instance, in the case of the 36-inch long demonstration model, the time necessary to reach pressure equilibrium between each

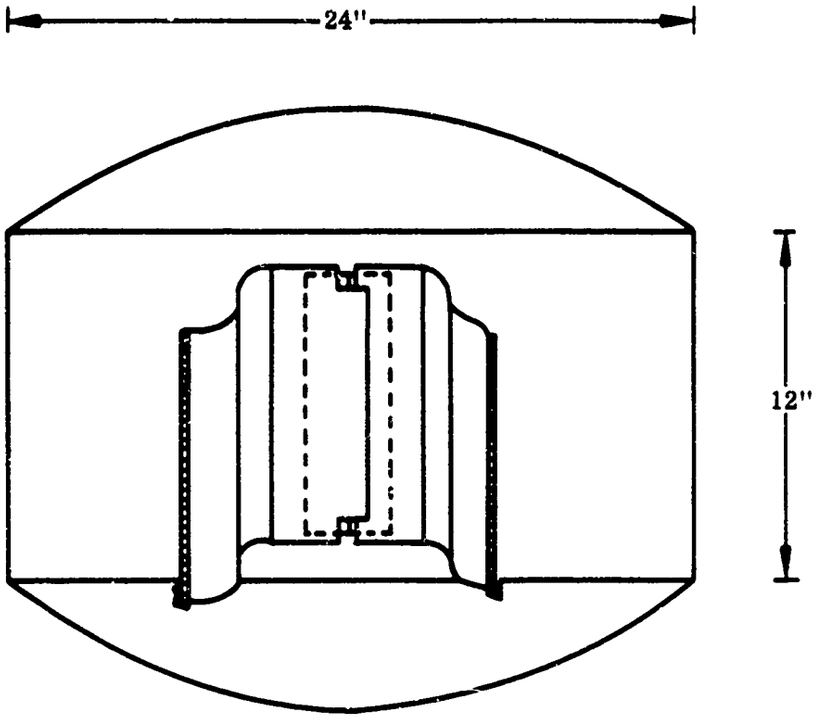

ASSEMBLED BREADBOARD MODEL

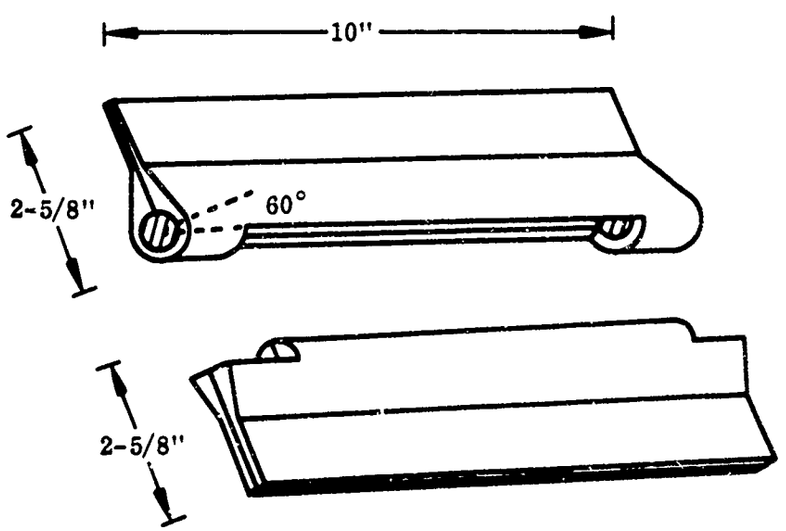

CLOSURE SEALING PARTS CONFIGURATION

FIGURE 9 LONGITUDINAL BREADBOARD MODEL

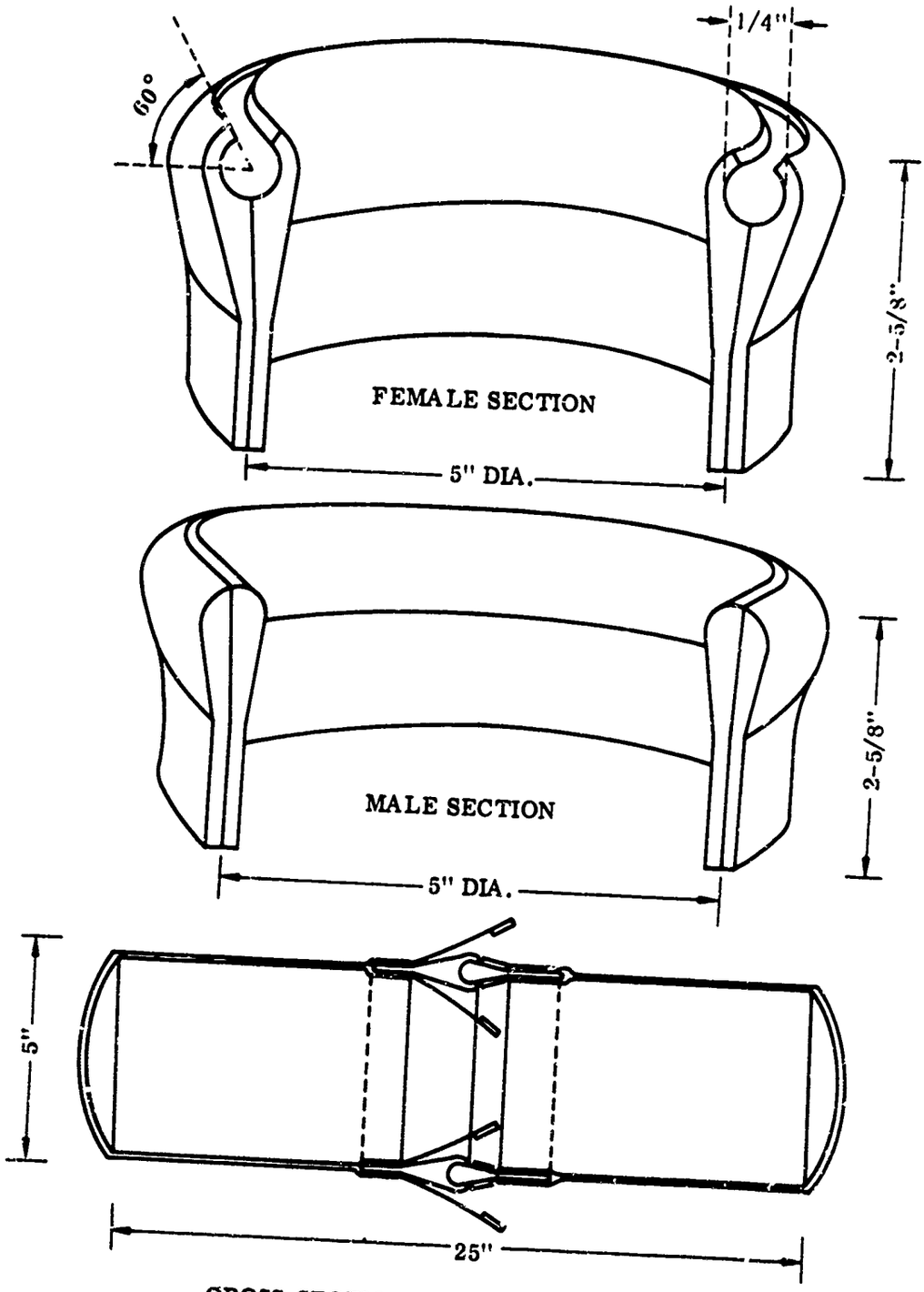

CROSS-SECTION OF CIRCULAR CLOSURE

FIGURE 10 CIRCULAR CLOSURE ASSEMBLY

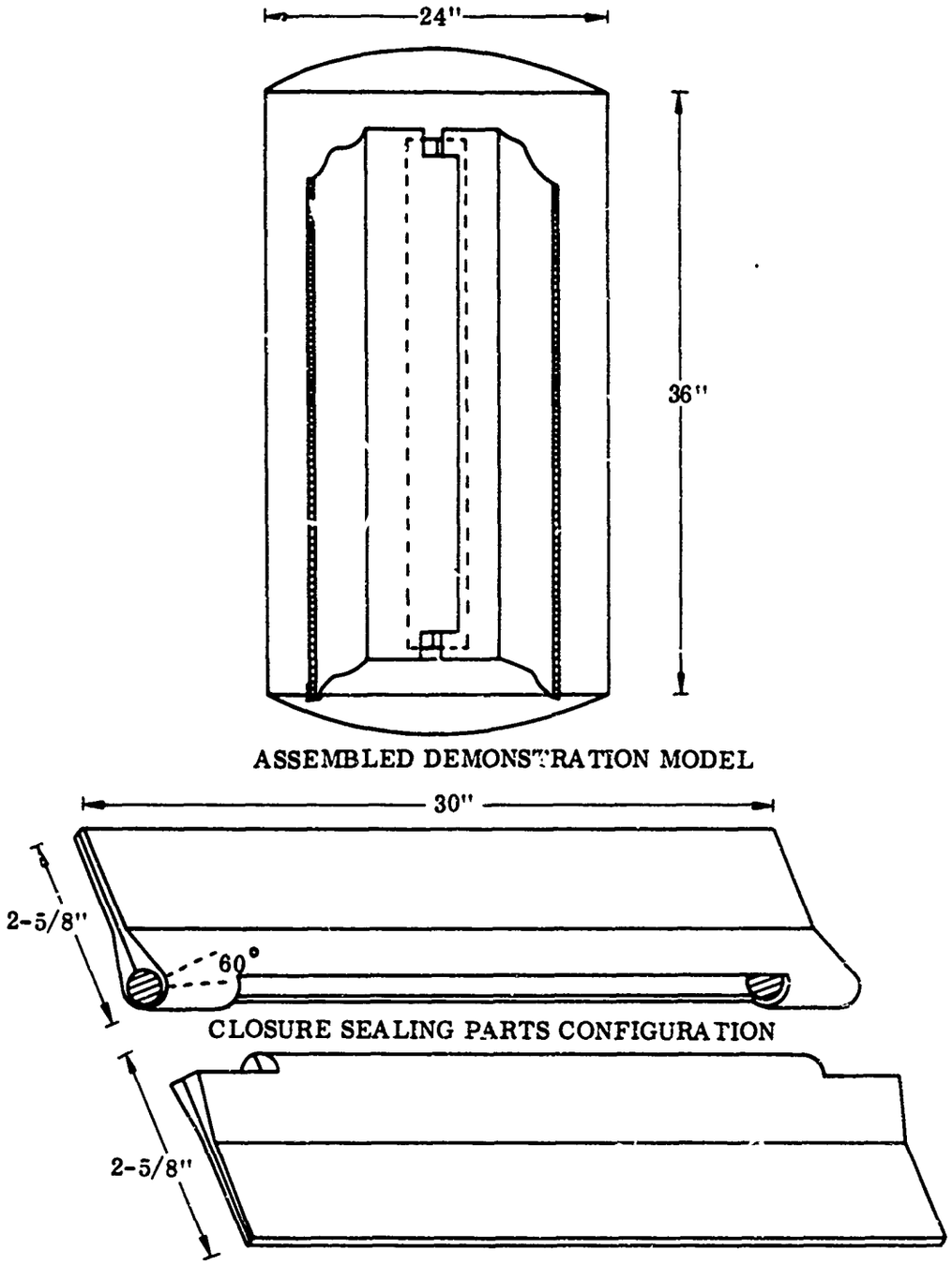

FIGURE 11 LONGITUDINAL DEMONSTRATION MODEL

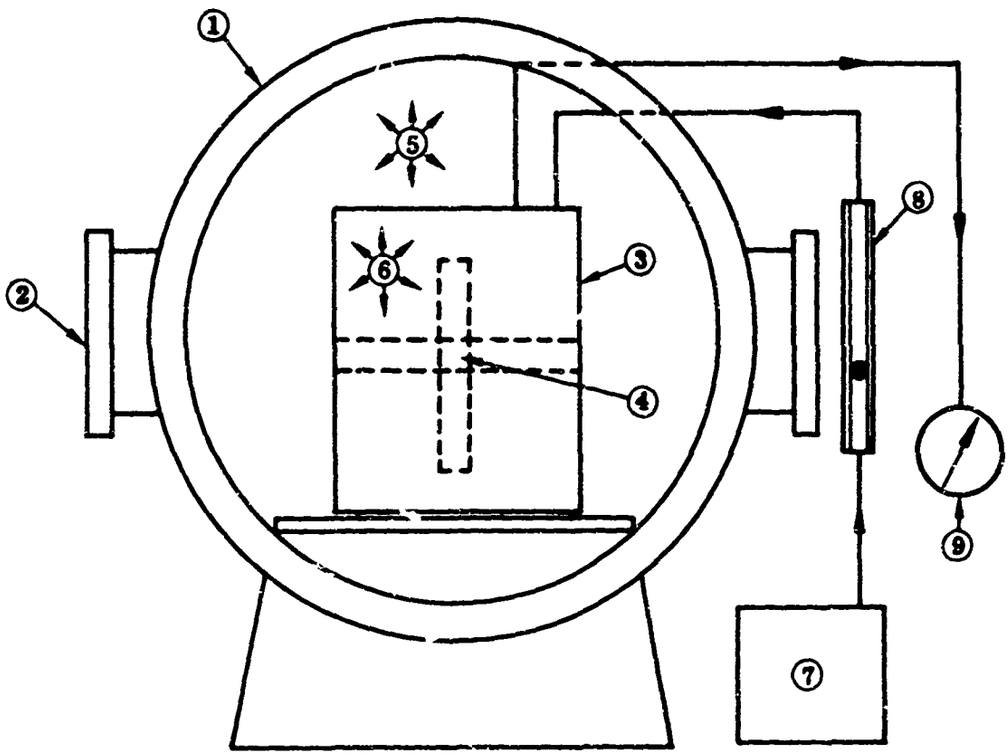

1. VACUUM CHAMBER
2. WINDOW FOR OBSERVATION OF MODEL DURING TEST
3. BREADBOARD OR DEMONSTRATION MODELS
4. PRESSURE CLOSURE DEVICE (STRAIGHT OR CIRCULAR)
5. 1 ATMOSPHERE
6. PRESSURE (0 PSIG TO 12 PSIG)
7. NITROGEN SOURCE
8. FLOWMETER
9. PRESSURE GAUGE

FIGURE 12 STATIC TEST APPARATUS

1/2-psig increase was approximately 15 to 20 minutes. The leak data obtained include the leak of the cylinder plus the leak existing in the lines connecting the N_2 source, the flowmeter and the pressure gauge to the cylinder.

In a second step, leak and pressure tests were conducted on the cylinders containing the closure devices. The procedure in increasing the pressure and determining the leak between 0 and 5 psig was similar to that above. From the leak rate data obtained above and the leak rate data obtained here, the leak rates were determined by difference for the closure devices alone.

In a third step, if the leak rate was less than 200 cc/min at the 3.5 psig level and there was no evidence of separation of the closure device, or rupture at the bonding of any of the closure device's elements up to 5 psig, then the model was subjected to higher pressures up to 12 psig. During this higher pressure test, evidence of separation of the closure device or rupture at any of the bonding areas were recorded but no leak rate was measured. If the model passed the last test successfully, then the closure was opened and closed 100 times and the leak rate measured again as stated above.

Using the above test procedure, the following breadboard and demonstration sealing closure models were evaluated.

a. Breadboard Model Containing the 8-inch Longitudinal Closure Device

As was described above, the leak and pressure tests were first conducted on the 24-inch diameter, 12-inch long cylinder without the closure device installed. The leak rate data recorded are given in table I. Using this cylinder a series of closure devices with different designs, were investigated. As was indicated in Section B-1, the same cylinder was used repeatedly by the cutting out and replacement by stitching and cementing of the sealing parts tested.

Initially, in the investigation, a breadboard model containing the closure design given in figure 1 was tested. At 1 psig pressure a high leak rate was noted and at 1-1/2 psig pressure the closure failed. Thus modifications of the AMRL concept were performed thereafter. In the modification process the breadboard model A with the closure design given in figure 13 was tested. The difference in the design here, as compared to the design given in figure 1, is that the design in figure 1 has a 20° inclination angle on the female section instead of 60°. This was done to accomplish a better seal and obtain a better grip. The leak rate data are presented in table I. Also shown on the table are the leak rates of the closure device only. These measurements are plotted on a graph given in figure 14. Although the leak rate of the closure only was low, the closure design showed failure of some of the closure elements. For instance, during the test, the area marked by weak point in figure 13

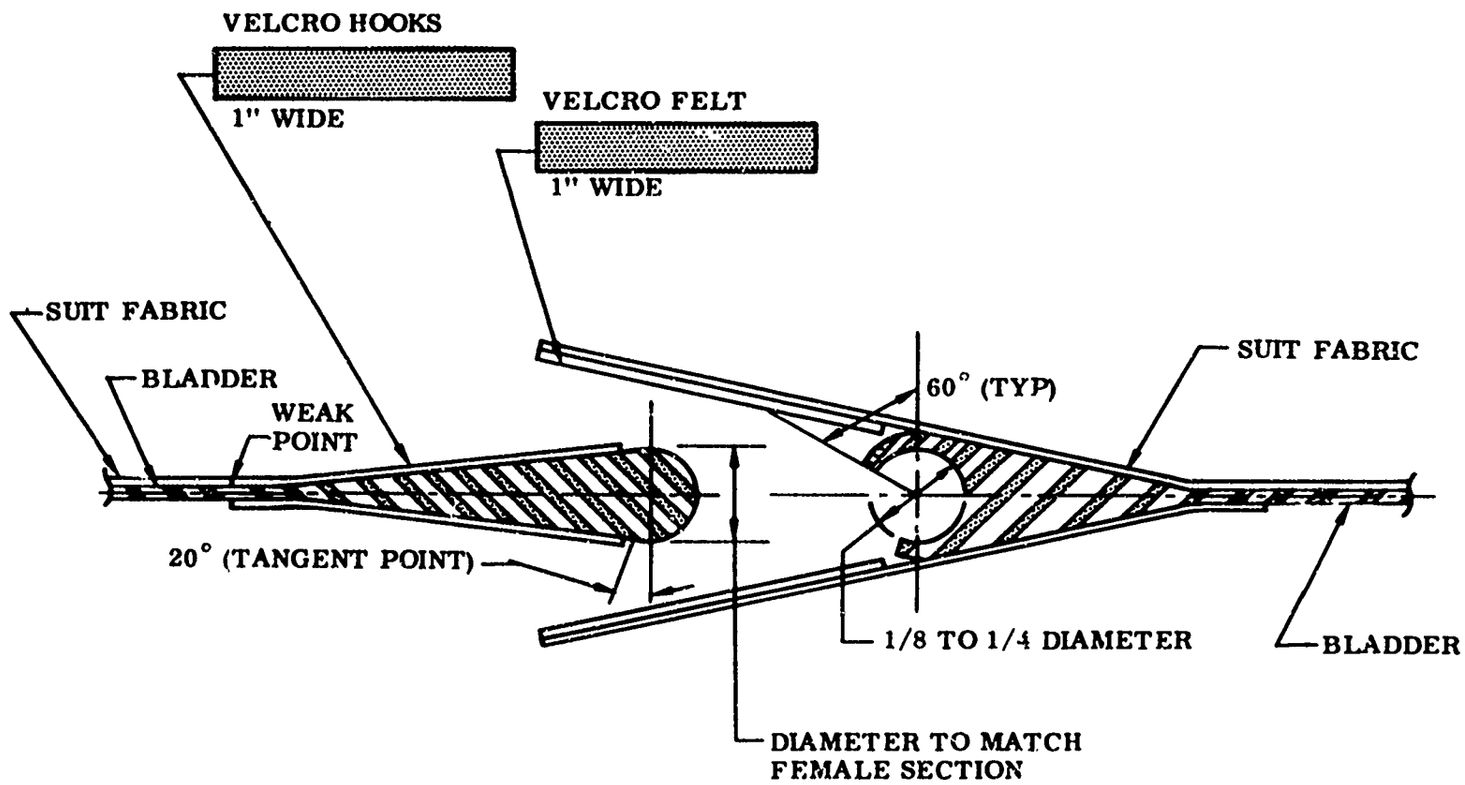

FIGURE 13 CLOSURE DESIGN IN BREADBOARD MODEL A

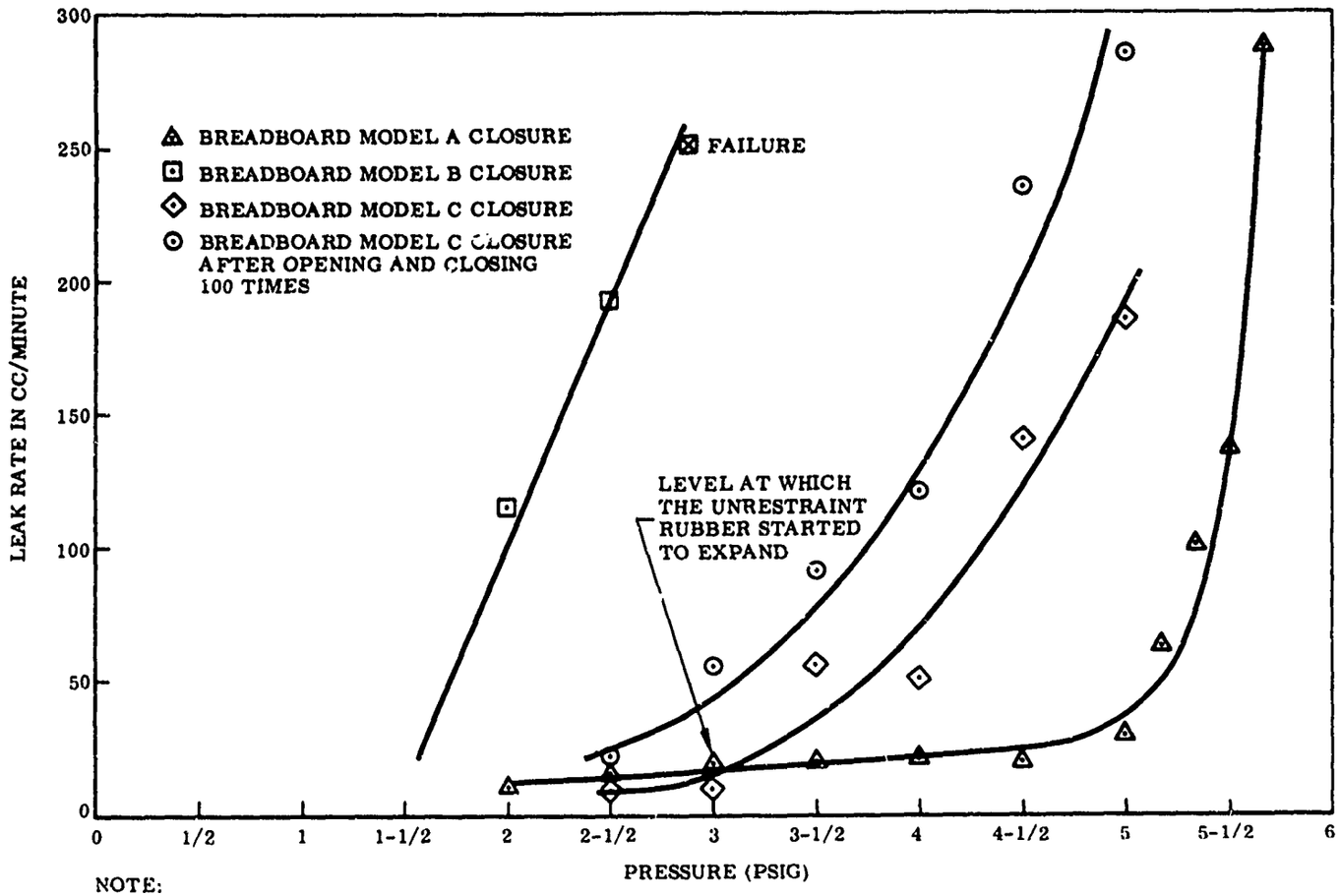

NOTE:

THE NOTED CHANGE IN THE LEAK RATES OF THE CLOSURES ONLY IN MODELS A AND C, WAS DUE TO THE LEAK RATES INCREASE OF THE CYLINDER ITSELF. THE LEAK RATE INCREASE OF THE CYLINDER ITSELF WAS IN TURN DUE TO THE HANDLING OF THE CYLINDER'S BLADDER MATERIAL AND THE CUTTING OUT AND REPLACEMENT OPERATIONS OF THE DIFFERENT CLOSURE DEVICES.

THE LOW LEAK RATES UP TO 5 PSIG RECORDED FOR THE BREADBOARD MODEL A CLOSURE WAS PROBABLY DUE TO THE EXPANSION OF THE RUBBER ELEMENT AT THE WEAK POINT OF THE CLOSURE (SEE FIGURE 13)

FIGURE 14 LEAK RATES OF THE CLOSURES ONLY, DETERMINED BY DIFFERENCE FROM THE DATA GIVEN IN TABLE 2

TABLE 1 LONGITUDINAL CLOSURE DEVICE

LEAK TEST RESULTS (BREADBOARD MODEL)

Pressure (psig)	Cylinder Without Closure Leak Rate cc/min	Cylinder Containing Model A		Cylinder Containing Model B	
		Total Leak Rate cc/min.	Closure Leak Rate Only cc/min	Total Leak Rate cc/min	Closure Leak Rate Only cc/min
1/2	100	100	0	100	0
1	125	125	0	125	0
1-1/2	140	140	0	140	0
2	140	150	10	255	115**
2-1/2	175	190	15	367*	192
3	175	195	20	--	--
3-1/2	200	220	20	--	--
4	220	240	20	--	--
4-1/2	230	250	20	--	--
5	250	280	30	--	--

* Opening of sealing closure

** Sealing parts started to separate

started to expand laterally at 3 psig. At this point the suit fabric was not bonded or sewn to the Velcro® hooks which left the bladder and the EPDM rubber of the male section unrestrained. The lateral expansion increased as the pressure inside the cylinder increased until at a certain pressure level it became critical. At this stage the test was terminated to prevent a serous blowout.

To eliminate the weak point, the Velcro® hooks and the suit fabric were bonded as shown in figure 15. The leak and pressure tests were repeated after the modification. The leak rate data of the improved closure design in breadboard model B are reported in Table I and the leak rates of the closure only are plotted in figure 14. From these values it can be deduced the elimination of the weak point in the breadboard model B design probably provoked a shifting of the pressure distribution accompanied by a shifting of the weak point to the Velcro® fasteners. This obviously made the Velcro® parts separate sooner which brought the closure failure at a much lower pressure. The rubber sealing parts formed from EPDM rubber, not being able to carry a great amount of pressure load, started to open as soon as the separation of the Velcro® parts became critical.

To overcome the failure and prevent the slippage of the Velcro® parts in the breadboard model B design, the zipper concept (refer to Section A-2) was used. This new concept (installed in breadboard model C) utilizing a zipper to help carry the load is illustrated in figure 16. The leak and pressure tests on this new concept showed pronounced improvements. The leak test data are presented in table II and are plotted in figure 14. Upon completion of the leak rate measurements, the pressure was then increased to 12 psig. No separation of the closure device or rupture at any of the bonding spots was recorded up to that pressure, thus giving a highly promising closure system. The time to accomplish the leak rate measurements was approximately one hour. The time to reach the pressure equilibrium and make the final leak rate reading between each 1/2-psig pressure increase was 5 minutes.

In the assembly of the breadboard model C, the following materials combination was employed: (1) Flexfirm® No. 36231 as the bladder material, (2) Nomex® nylon HT-10-41 as the restraint fabric, (3) EPDM as the elastomer for the sealing parts, Crown® No. 7 zipper with cotton backing, (5) Velcro® fasteners No. 80, (6) Stabond® T-161 as the bonding agent, and (7) Dacron® No. 24 as the sewing thread.

Upon passing the above tests successfully, the closure device was exposed to the cycling test, that is, it was opened and closed 100 times and the leak rate measured again as above. The data are given in table II

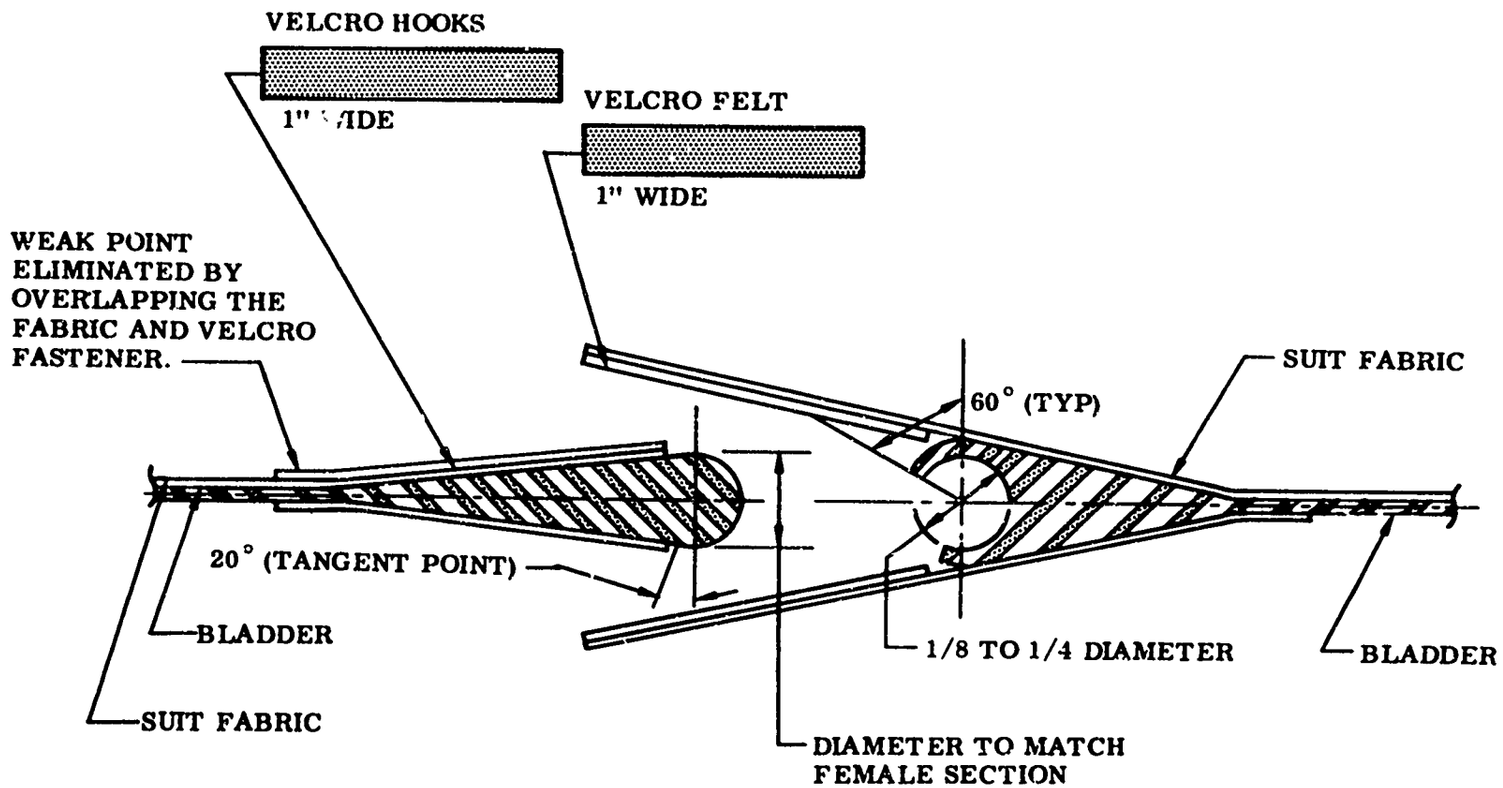

FIGURE 15 CLOSURE DESIGN IN BREADBOARD MODEL B

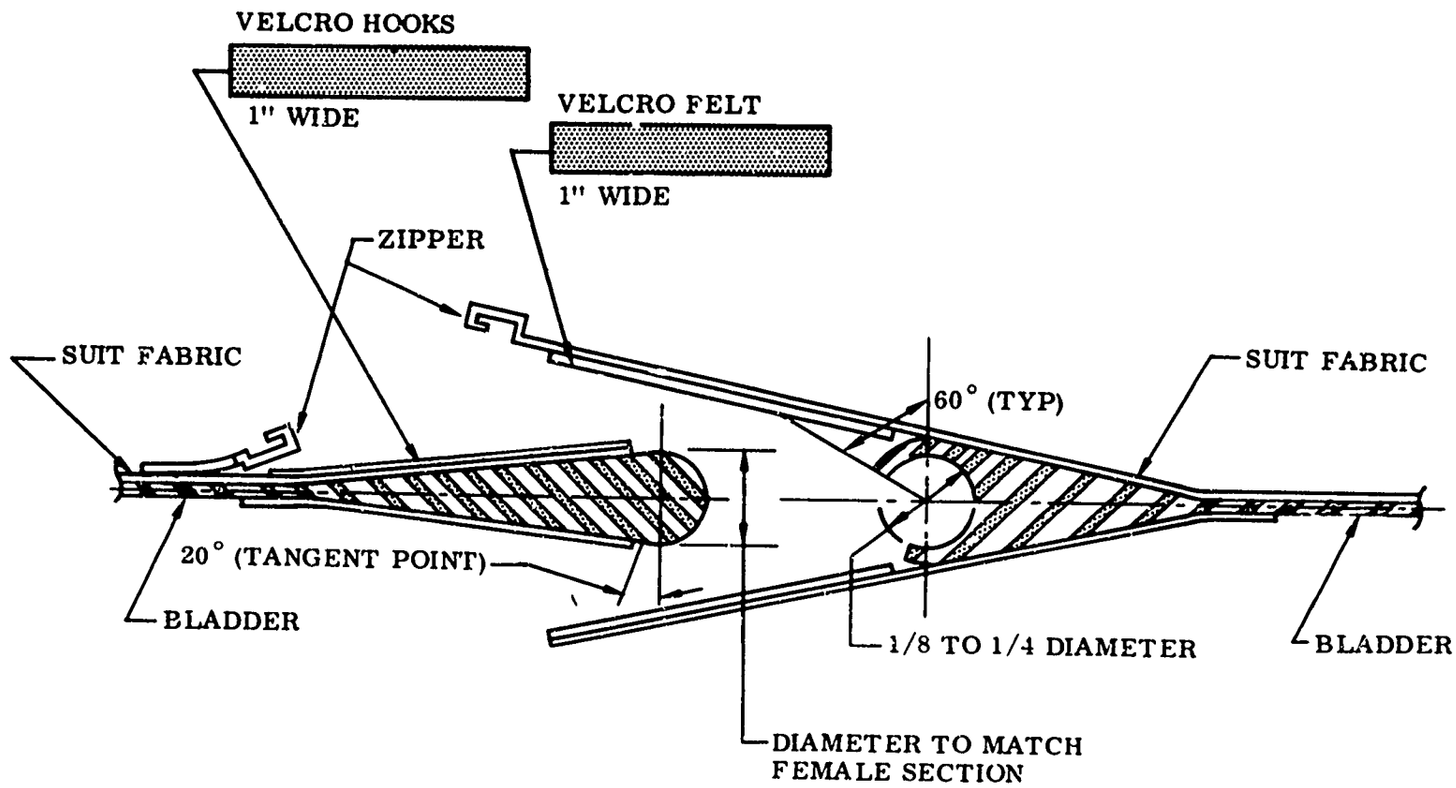

FIGURE 16 CLOSURE DESIGN IN BREADBOARD MODEL C

TABLE II LONGITUDINAL CLOSURE DEVICE

LEAK TEST RESULTS (BREADBOARD MODEL)

Pressure (psig)	Cylinder Without Closure Leak Rate cc/min	Cylinder Containing Model A, Before Cycling		Cylinder Containing Model B, After Cycling	
		Total Leak Rate cc/min	Closure Leak Rate Only cc/min	Total Leak Rate cc/min	Closure Leak Rate Only cc/min
1/2	100	100	0	100	0
1	125	125	0	108	0
1-1/2	140	140	0	125	0
2	140	140	0	140	0
2-1/2	175	185	10	195	20
3	175	185	10	230	55
3-1/2	200	255	55	290	90
4	220	270	50	340	120
4-1/2	230	367	137	465	235
5	250	435	185	535	285

and are plotted in figure 14. This closure met the requirement of maintaining a leak rate below 200 cc/min at 3-1/2 psig before and after the 100 cycles. Figure 17 shows the breadboard model after tests were completed.

b. Demonstration Model Containing the 30-inch Longitudinal Closure Device

Because the breadboard model C was considered to have the best closure design, it was used in the fabrication of the demonstration model. In a first attempt to assemble a successful model, the following materials combination was employed: (1) Flexfirm® No. 36231 as the bladder material, (2) Nomex® nylon HT-10-41 as the restraint fabric, (3) EPDM as the elastomer for the sealing parts, (4) Crown® No. 7 zipper with cotton backing, (5) Velcro® fasteners No. 80, (6) Stabond® T-161 as the bonding agent, and (7) Dacron® No. 24 as the sewing thread. The size of the cylinder was 36 inches long and had a 24-inch diameter. The length of the closure device was 30 inches. This model was designated "Demonstration Model A."

The leak and pressure tests were conducted in a similar fashion as for the breadboard models above. The results are presented in table III, and the leak rates data on the closure device only, are plotted on the graph given in figure 18.

Upon passing the leak test successfully, the pressure was increased gradually to 12 psig. However, before attaining this high pressure, a rupture of the cylinder occurred at the 7.5 psig level. In analyzing the main cause of this rupture, it was established that repaired areas due to earlier leaks had failed at both extremities of the closure. During the high pressure test, the cylinder's size had increased in large proportions. Thus, the hoop tension and longitudinal pressure values had exceeded the anticipated values. Regarding the closure device itself, it had performed excellently

To correct the deficiencies experienced above, a new demonstration cylinder designated "Demonstration Model B" was fabricated having the same dimensions. The materials combination employed and the improvements added, were as follows: (1) Black NN5934-2® as the bladder material, (2) Nomex® nylon HT-10-41 as the restraint fabric, (3) EPDM as the elastomer for the sealing parts, (4) Crown® No. 7 zipper with cotton backing, (5) Velcro® fasteners No. 80, (6) Stabond® T-161 as the bonding agent, (7) Dacron® No. 24 as the sewing thread, and (8) nylon retention tape. Regarding the improvements, a double layer restraint fabric was used around the closure device and nylon retention tape was

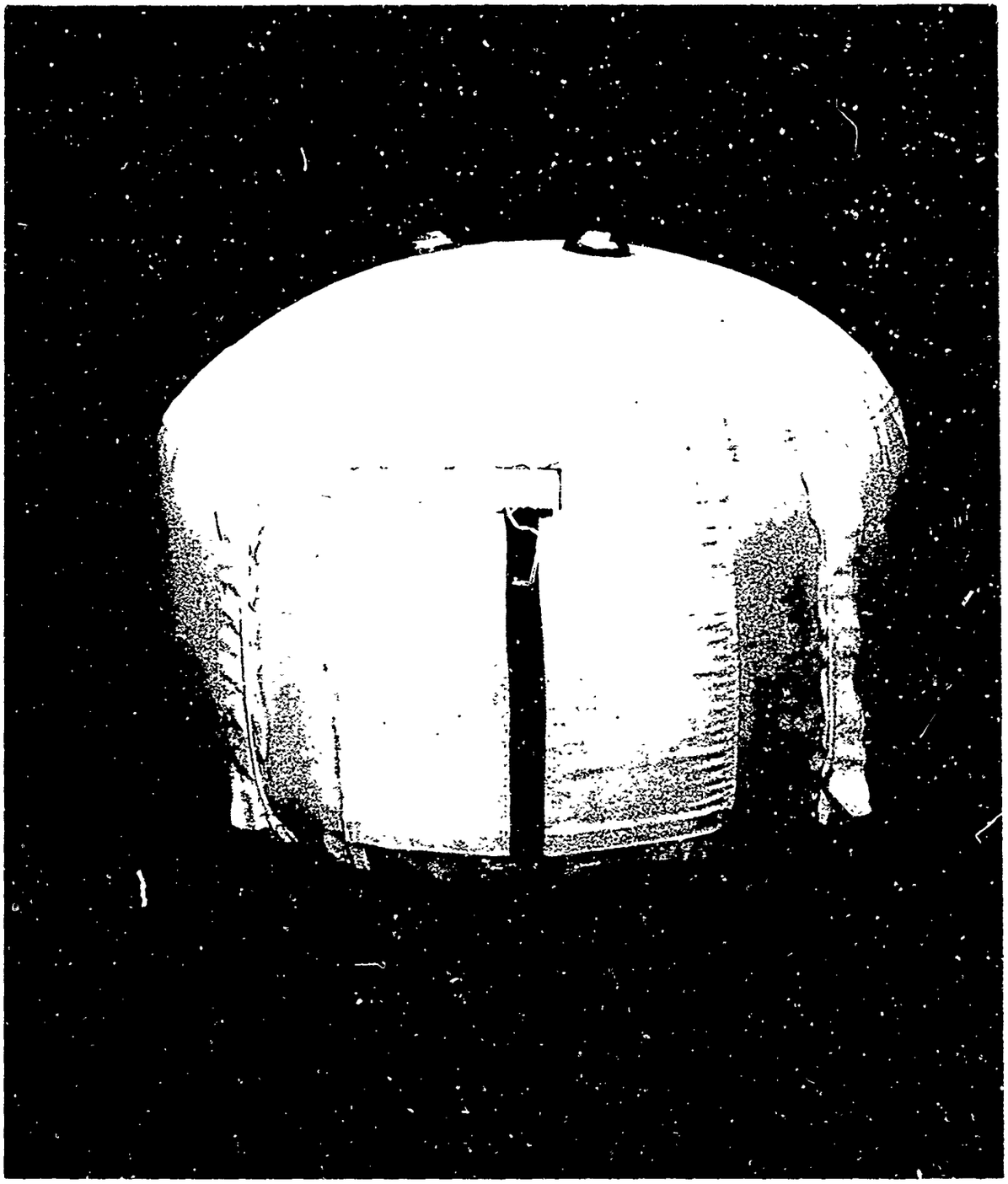

FIGURE 17 BREADBOARD MODEL C AFTER TESTS

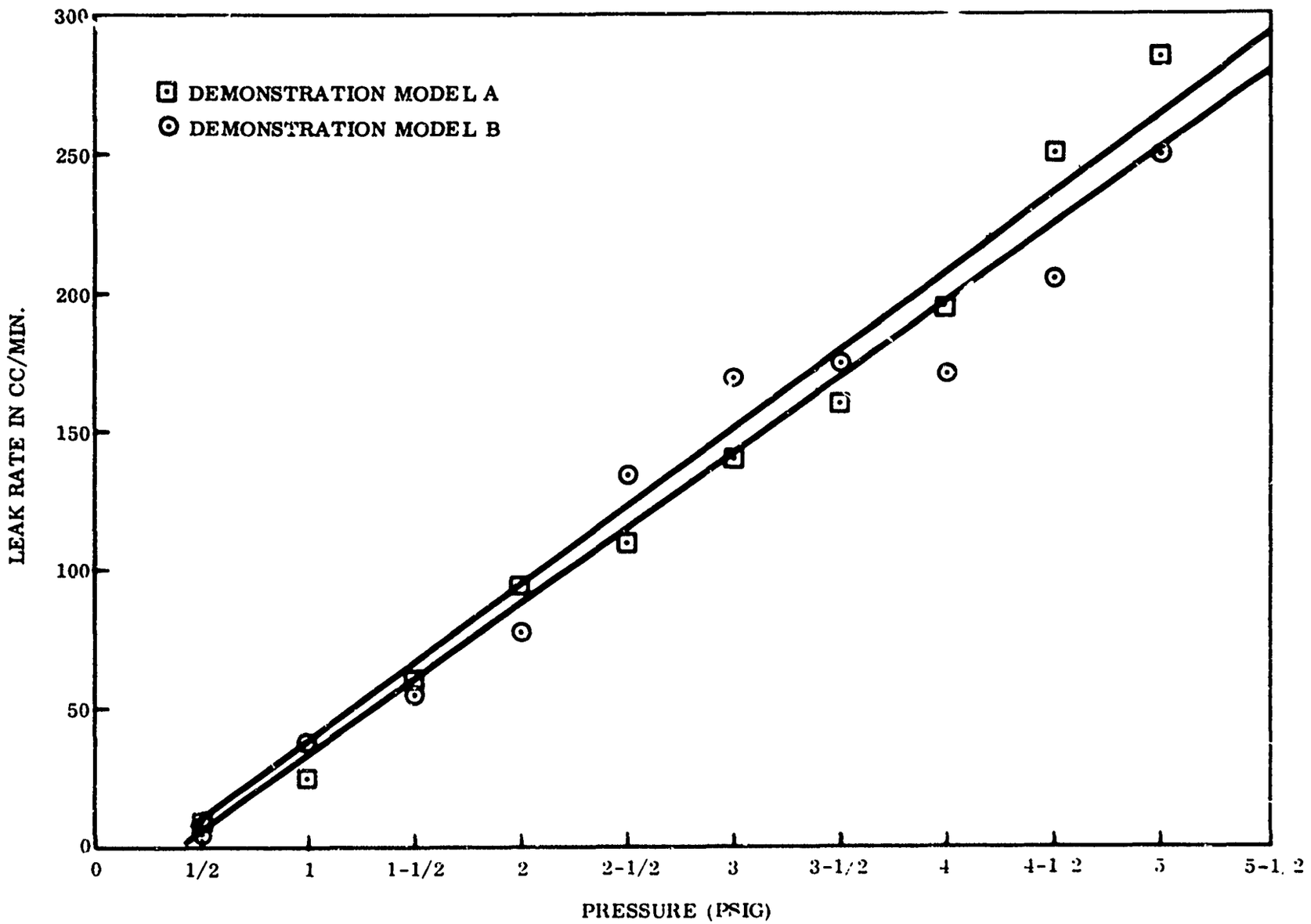

FIGURE 18 LEAK RATES OF THE CLOSURES ONLY (DEMONSTRATION MODELS)

TABLE III LONGITUDINAL CLOSURE DEVICE

LEAKAGE TEST RESULTS (DEMONSTRATION MODELS)

Pressure (psig)	Demonstration Model A Without Closure Leak Rate cc/min	Demonstration Model A With Closure		Demonstration Model B Without Closure Leak Rate cc/min	Demonstration Model B With Closure	
		Total Leak Rate cc/min	Closure Leak Rate cc/min		Total Leak Rate cc/min	Closure Leak Rate cc/min
1/2	30	40	10	0	5	5
1	55	80	25	5	42	37
1-1/2	80	140	60	15	70	55
2	100	195	95	15	92	77
2-1/2	150	260	110	15	151	136
3	150	290	140	15	185	170
3-1/2	265	425	160	25	198	173
4	265	460	195	51	221	170
4-1/2	400	650	250	51	255	204
5	650	935	285	63	311	248

sewn longitudinally and around the circumference of the cylinder as shown in figure 19.

The leak rates data of the cylinder without the closure installed and of the closure device only, are given in table III and figure 18. The leak test was passed successfully as the data indicate. However, the high pressure test up to 12 psig failed to pass by a very narrow margin, inasmuch as the cylinder ruptured at the 11.7 psig pressure level.

An attempt to find the cause of the failure led to the suspicion that the main reason of the rupture was a sewn area which showed, after rupture, a pulling out of the restraint fabric fibers. In spite of this failure, the demonstration model can be considered as successful inasmuch as the main objective of this program was to demonstrate the feasibility to design and fabricate a closure device which would successfully pass this program's requirements. Regarding the pulling out of the fabric fibers, this can definitely be corrected by improving the method of terminating fabric seams.

During the leak tests, the time required to reach the pressure equilibrium and make the final leak rate reading between each 1/2-psig pressure increase was 15 to 20 minutes.

c. Breadboard and Demonstration Models Containing the 5-inch Diameter Circular Closure Device

Two models were tested separately, (1) a breadboard model designated "Circular Closure Model A," and (2) a demonstration model designated "Circular Closure Model B." For each of the two models, two concepts were tested, (a) the concept as formulated by AMRL with modified inclination angle on female section (figure 13), and (b) the concept using the AMRL-designed device combined with a zipper, as shown in figure 16.

Testing of the Circular Closure Model A - This closure differs from the closure device B mainly in the type of elastomeric material used for the sealing parts. Thus, in the case of the Model A, EPDM rubber is used, and in the case of the closure Model B, Hypalon® rubber is used. The other materials used were for both closure devices: (1) Flexfirm® No. 36231 as bladder material, (2) Nomex® nylon HT-10-41 as the restraint fabric, (3) Crown® No. 7 zipper with cotton backing, (4) Stabond® T-161 as the bonding agent, (5) Velcro® fasteners No. 80, and (6) Dacron® No. 24 thread.

The leak and pressure tests on the Model A device were conducted in a similar fashion as described for the longitudinal closure device. In a first step, leak rates and pressure resistance were determined on the

FIGURE 19 DEMONSTRATION MODEL B SHOWING THE CLOSURE DEVICE SEALED

5-inch diameter, 25-inch long cylinder not containing the closure device. The leak rate measurements were determined from 0 psig to 5 psig in 1/2-inch increments. The leak rate data given in table IV and expressed in cc/min include the leak of the cylinder plus the leak existing in the lines connecting the N_2 source and the flowmeter to the cylinder. These data were plotted on a graph as shown in figure 20.

After installation of the closure device design (figure 13) in the 5-inch diameter cylinder, the leak rates and pressure resistance were measured again as above. The data obtained are also given in table IV.

As indicated by the data, the Velcro® fasteners started to give at the 3 psig pressure level. At the 3-1/2 psig pressure level. At the 3-1/2 psig pressure level, the leak rate had almost doubled, and at 4 psig, opening of the closure sealing parts was detected. The leak slope and failure are given in figure 21.

Corrections were made to eliminate this failure of the closure by installing a zipper, as shown in figure 16. Leak rates gave the results as shown in table IV. The slope of the leak rate curve of the closure only is given in figure 21.

After completion of the leak rate measurements, up to 5 psig pressure, the pressure was then increased gradually to 12 psig over a time period of approximately one hour. No leak measurements were determined at these higher pressures but any separation of the closure device or rupture occurring at any of the bonding or sewn spots was recorded. Inasmuch as no such defects were noted up to 12 psig, this closure system was considered as highly promising.

As per this contract's requirements, the successful closure was then opened and closed 100 times and the leak rate measured again, as above. The results are given in table IV and figure 21.

During this last test no separation of the closure parts or rupture at any of the bonding or sewn spots were recorded. However, after the test a closer evaluation of the cylinder itself revealed two small leaks originating from two bonding areas of the bladder material. Thus, the noted leak rate increase of the model after the cycling test was not due to the closure device itself. Probably the handling of the bladder material during the cycling test provoked these small leaks. For each of the above cases, the time spent for the leak rate and pressure resistance measurements, up to 5 psig, was approximately one hour.

Testing of the Circular Closure Model B - The leak and pressure tests were conducted similarly to the tests performed above on the Circular Closure Model A. The only exception was, that here, the model containing the closure design as shown in figure 13 was not tested inasmuch as this concept will not pass the tests as it was shown with the Closure Model A above.

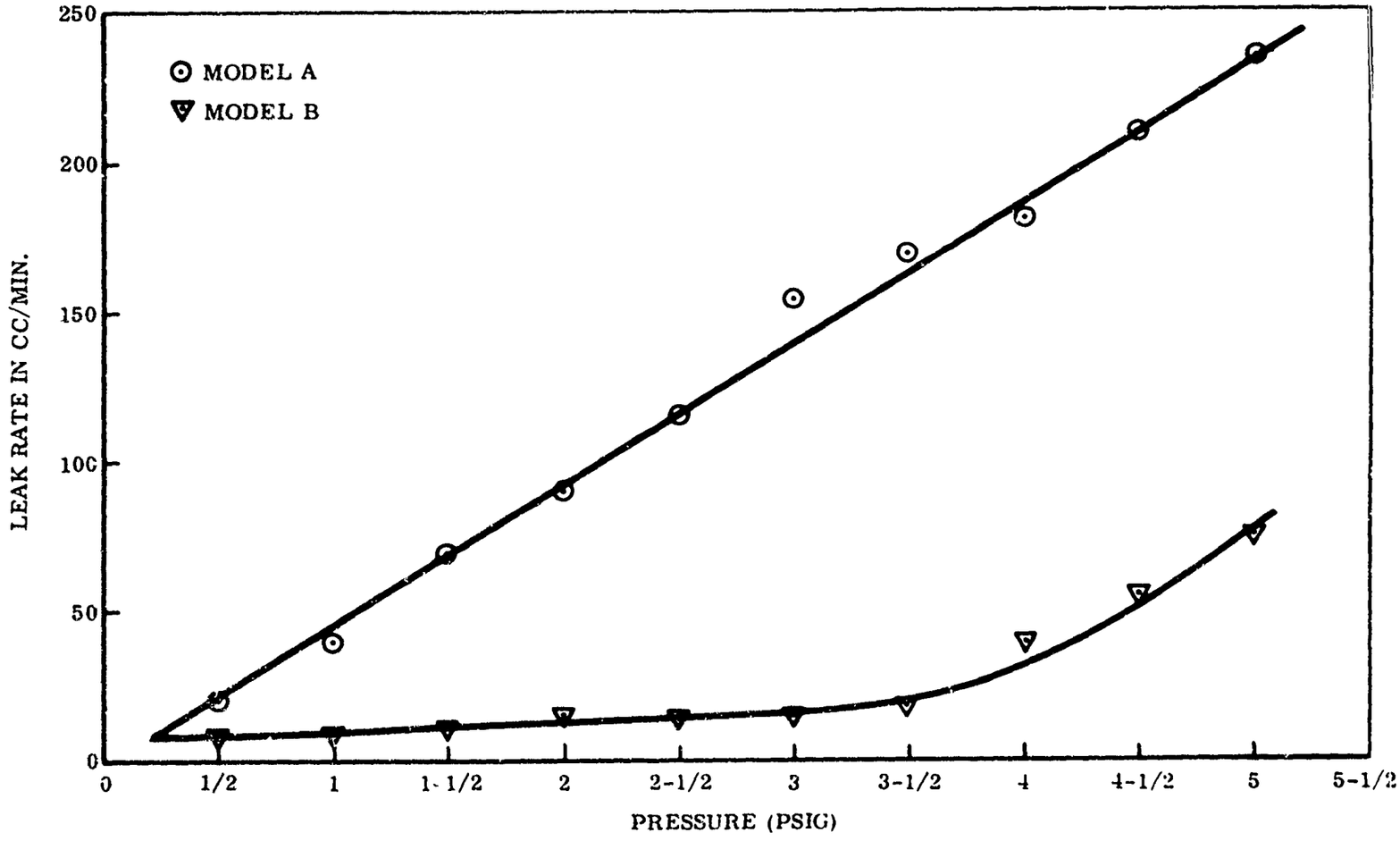

FIGURE 20 LEAK RATES OF CYLINDERS WITHOUT CIRCULAR CLOSURES INSTALLED

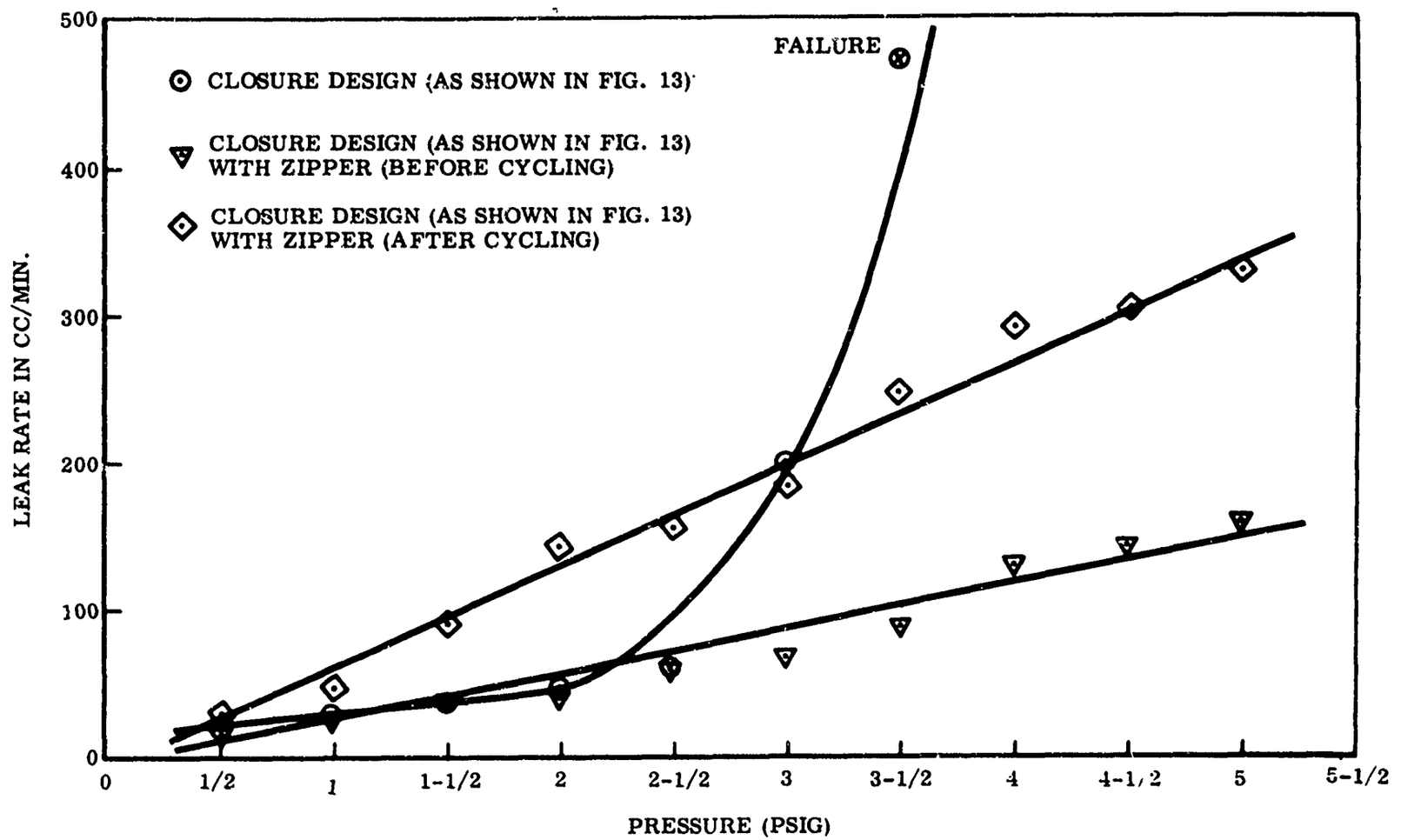

FIGURE 21 LEAK RATES OF THE CIRCULAR CLOSURE A ONLY

TABLE IV CIRCULAR CLOSURE MODEL A LEAKAGE TEST RESULTS

Pressure (psig)	Without Closure Leak Rate cc/min	Circular Model A with Closure		Circular Model A with Closure and Zipper before cycling		Circular Model A with Closure and Zipper after cycling	
		Total Leak Rate cc/min	Closure Leak Rate Only cc/min	Total Leak Rate cc/min	Closure Leak Rate Only cc/min	Total Leak Rate cc/min	Closure Leak Rate Only cc/min
1/2	20	40	20	35	15	50	30
1	40	70	30	67	27	85	45
1-1/2	70	100	30	107	37	158	88
2	90	132	42	132	42	233	143
2-1/2	115	175	60	175	60	270	155
3	154	353	199	220	66	337	183
3-1/2	168	640	472	255	87	415	247
4	183	Opening of Sealing Closure	--	311	128	473	290
4-1/2	211	--	--	352	141	515	304
5	236	--	--	395	159	566	330

The following results, as shown in table V, were obtained in the leak and pressure tests on the (a) 5-inch diameter, approximately 25-inch long cylinder not containing the closure device, (b) cylinder containing the closure and zipper before the cycling test, and (c) cylinder containing the closure and zipper after the cycling test.

In case (a), the data are plotted on the graph given in figure 20. Regarding cases (b) and (c), the slopes of the leak rate curves of the closures only are given in figure 22.

After passing the leak test successfully whereby no evidence of separation of the closure parts, or rupture at the bonding of any of the closure and cylinder elements, was noted, the pressure inside the cylinder was gradually increased to 12 psig. This high pressure test was also passed successfully. Figure 23 shows the circular closure Model B after the tests were completed.

The time required for conducting the leak rate and pressure resistance measurements up to 5 psig for each of the above cases, was approximately one hour.

As noted in tables IV and V, both closure models A and B met this program's requirements, that is, the leak rate at the 3.5 psig pressure level was less than 200 cc/min and there was no evidence of separation of the closure device, or rupture at the bonding of any of the closure device's elements up to 12 psig. The models also passed the cycling test.

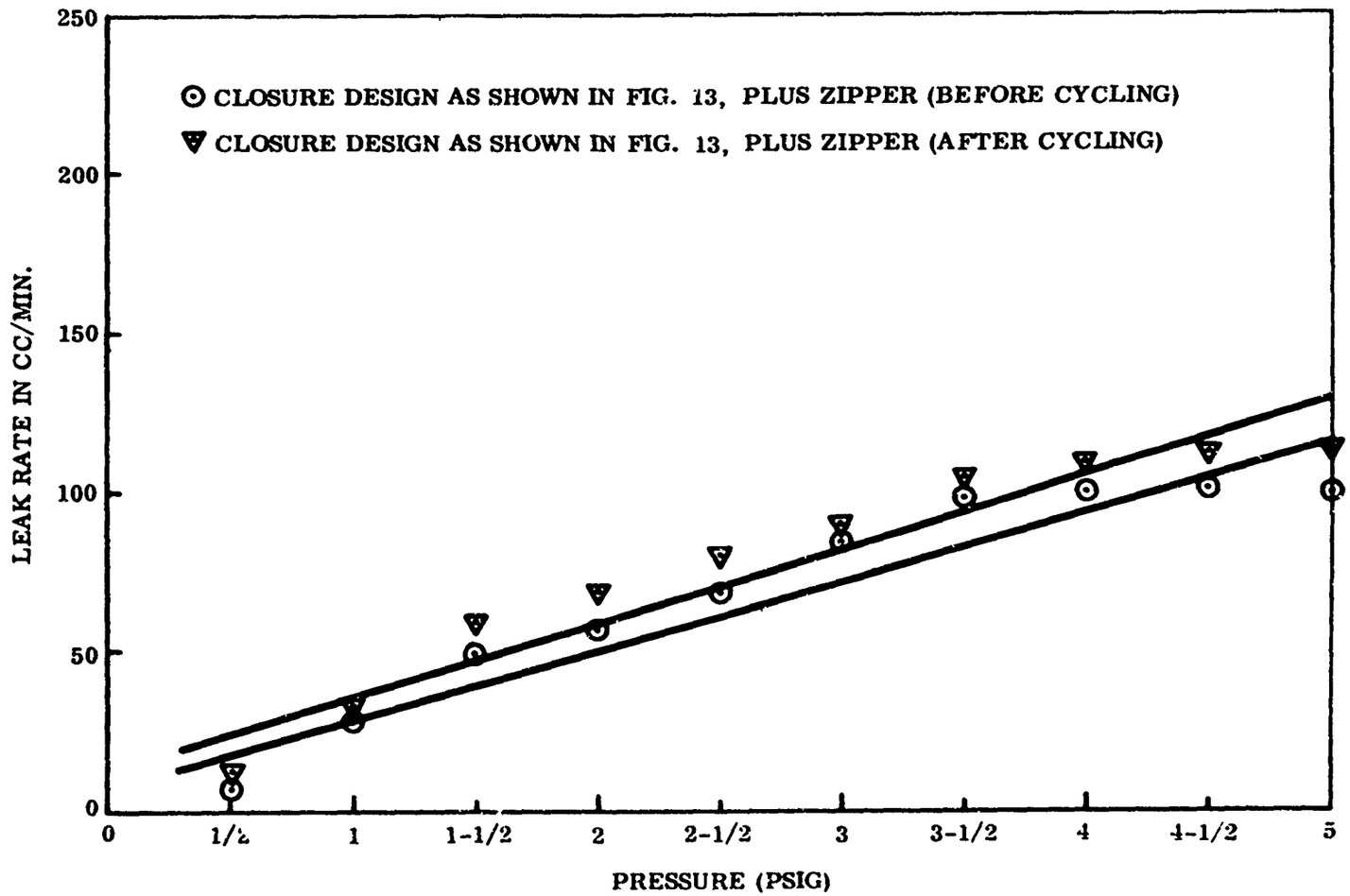

FIGURE 22 LEAK RATES OF THE CIRCULAR CLOSURE B ONLY

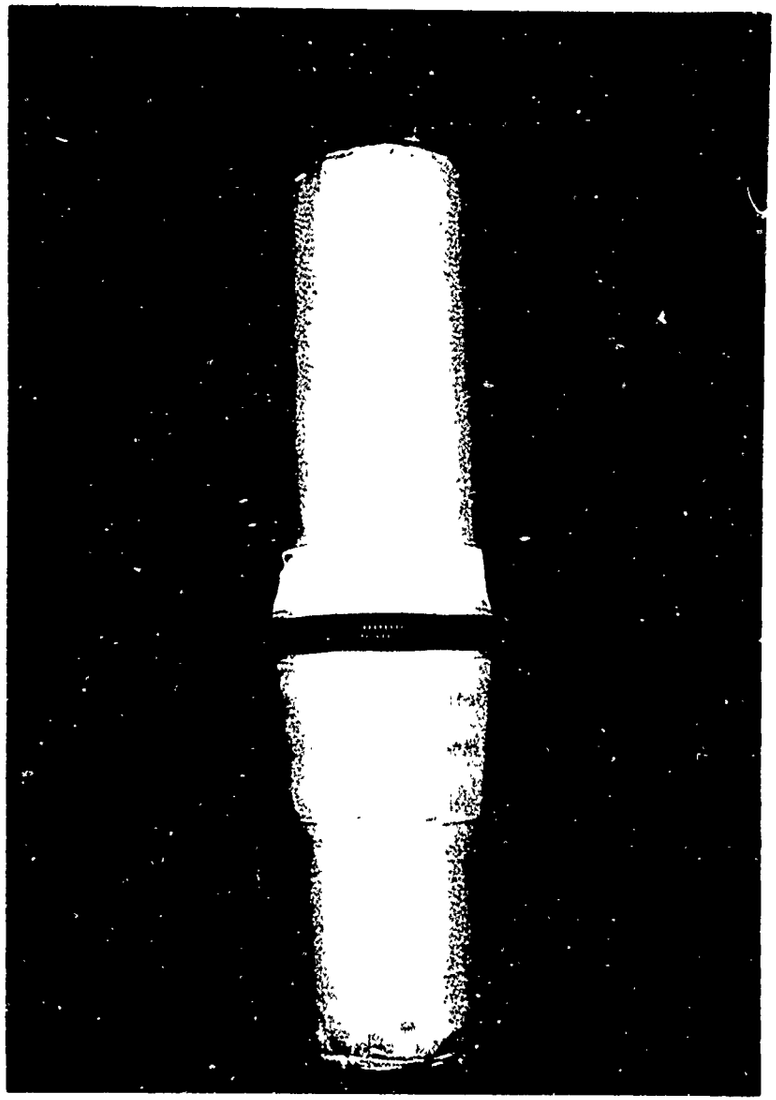

ZIPPED CONDITION

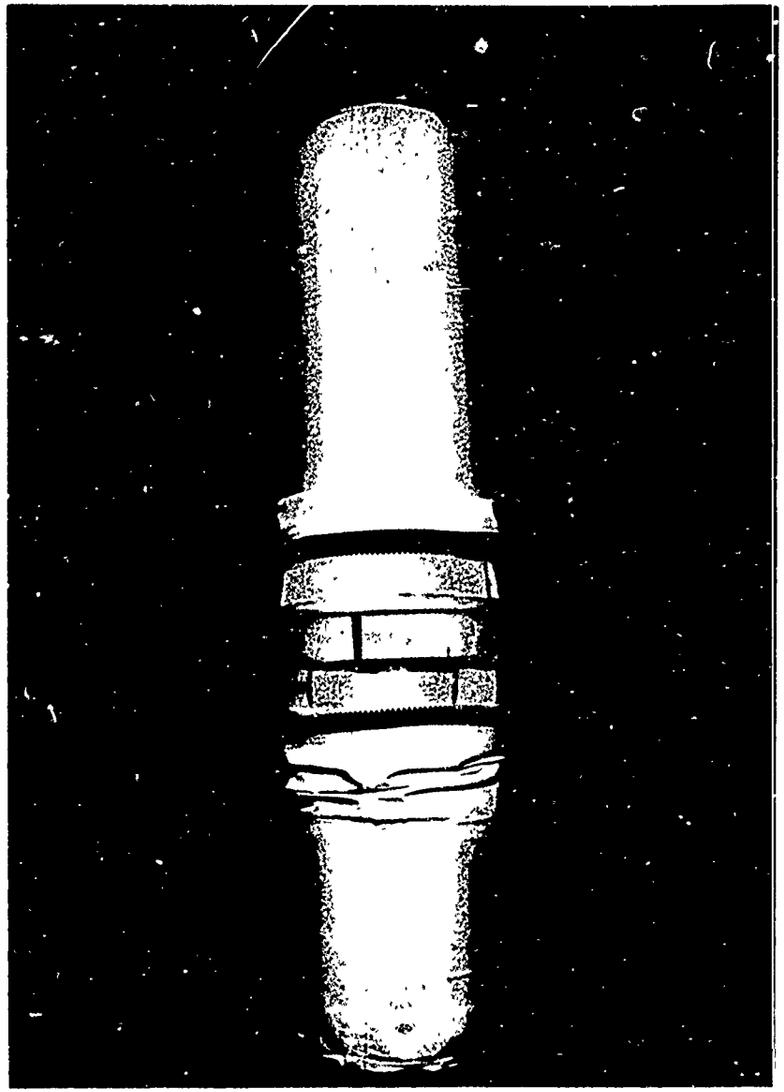

UNZIPPED CONDITION

FIGURE 23 CIRCULAR CLOSURE MODEL B AFTER TESTS

TABLE V CIRCULAR CLOSURE MODEL B LEAK TEST RESULTS

Pressure (psig)	Model B Without Closure Leak Rate cc/min	Circular Model B with Closure and Zipper, before cycling		Circular Model B with Closure and Zipper, after cycling	
		Total Leak Rate cc/min	Closure Leak Rate Only cc/min	Total Leak Rate cc/min	Closure Leak Rate Only cc/min
1/2	8	15	7	20	12
1	8	35	27	40	32
1-1/2	11	60	49	70	59
2	15	71	56	83	68
2-1/2	15	83	68	95	80
3	15	99	84	105	90
3-1/2	18	116	98	122	104
4	40	140	100	150	110
4-1/2	55	156	101	167	112
5	75	175	100	188	113

SECTION III

CONCLUSIONS AND RECOMMENDATIONS

A. Conclusions

Longitudinal and circular sealing closure devices have been designed, developed and tested for full pressure protective assemblies. From this study the AMRL design concept for a pressure sealing closure, as originally proposed, did not pass the leak rate requirements of the high pressure tests. However, a modified version of it proved to resolve the problems encountered. Thus, a fabricated modified AMRL pressure suit bladder seal with zipper concept, either circular or longitudinal, passed successfully the required tests. No problems were encountered in selecting a suitable elastomeric material for the fabrication of the closure sealing parts. However, a large amount of time had to be spent in selecting an appropriate fabrication process for the closure sealing parts. Also, some problems of selecting the proper bonding agents for the assembly of the closure sealing parts had to be overcome. The bonding agent which was finally selected performed well enough to demonstrate the feasibility of the closures tested.

B. Recommendations

During this program the feasibility of the pressure sealing closure design concept was demonstrated. However, additional improvements should be made before the successfully developed closure design could be used in actual applications. For instance, a molding process which would mold the female and male sections in one piece each would be a major improvement. This would simplify the assembly of the closure parts and reduce the weight, flexibility and bonding problems. Another improvement would be to develop a more effective adhesive compound for the bonding of the EPDM elastomer to other materials.

The efficiency of the pressure load-carrying Velcro® parts could be increased by applying a counter-pressure against the parts. This counter-pressure could be applied by means of an expandable system such as a closed cell foam or inflatable stiffening members. The operating principle of this pressure sealing concept would be as follows. After bringing the closure sealing parts in a sealed position, the Velcro® fasteners are pressed together which, in turn, are covered with the expandable system as shown in figure 3. Upon exposure to a reduced pressure, the cylinder in which the sealing closure is installed will inflate due to an existing pressure differential, and at the same time the expandable system will expand and exert a pressure against the Velcro® fasteners keeping them from separating. To allow the pressure exerted by the foam to be concentrated against the Velcro® fasteners only, the foam is restrained as shown in figure 3. The restraint layer

is made of a suitable fabric in which rigid segments are incorporated, repeating themselves so as to render the expandable system bendable longitudinally and prevent bulkiness. The counter-pressure exerted by the foam can be varied depending upon the conditions under which the closed cell foam has been prepared.

The success of this concept would depend a great deal upon (1) selection of the proper foam exerting the right pressure and (2) timing of the foam pressure exertion as against the pressure exertion from within the cylinder.

REFERENCES

1. Moran, A. L., and T. D. Eubank, E. I. Du Pont de Nemours and Company Report No. 58-3, May, 1958.

2. Moran, A. L., E. I. Du Pont de Nemours and Company Report No. 58-7, June 1958.

3. Von Wald, J. L., E. I. Du Pont de Nemours and Company Viton Report No. 11, June 1963.

4. Peffer, P. A., J. B. Knox, and A. J. Brandau, E. I. Du Pont de Nemours and Company Report No. 59-2, June, 1959.

5. Burton, J. R. A., E. I. DuPont de Nemours and Company Hypalon Report No. 1, May 1960.

6. Moran, A. L., E. I. Du Pont de Nemours and Company Hypalon Report No. 4, Dec. 1960.

7. Maynard, J. T., and P. R. Johnson, E. I. Du Pont de Nemours and Company Hypalon Report No. 13, May 1963.

8. Uniroyal Chemical Division, Uniroyal, Inc., Royalene EPDM Literature, 1966.

9. Eubank, T. D., and A. L. Schloss, E. I. Du Pont de Nemours and Company Viton Report No. 2, November 1960.

10. Deskin, R. C., and J. L. Von Wald, E. I. Du Pont de Nemours and Company Viton Report No. 12, May 1964.

11. Hedberg, J. G., E. I. Du Pont de Nemours and Company Hypalon Report No. 2, Dec. 1960.

12. Kirkhill Rubber Co., Los Angeles; Castro Rubber Mold Works, Los Angeles; Rubbercraft Corporation of California, Los Angeles; Pittman Rubber Co., Los Angeles.

Security Classification

DOCUMENT CONTROL DATA - R & D

(Security classification of title, body of abstract and indexing annotation must be entered when the overall report is classified)

1. ORIGINATING ACTIVITY (Corporate author) Northrop Space Laboratories 3901 W. Broadway Hawthorne, California 90250	2a. REPORT SECURITY CLASSIFICATION UNCLASSIFIED 2b. GROUP N/A

3. REPORT TITLE

PRESSURE SEALING CLOSURE FOR FULL PRESSURE PROTECTIVE SUIT ASSEMBLIES

4. DESCRIPTIVE NOTES (Type of report and inclusive dates)

Final Report (15 July 1966 to 10 February 1967)

5. AUTHOR(S) (First name, middle initial, last name)

Roger M. Heitz
Gary G. Brown

6. REPORT DATE June 1967	7a. TOTAL NO. OF PAGES 52	7b. NO. OF REFS 12
8a. CONTRACT OR GRANT NO. AF 33(615)-5372 b. PROJECT NO. 7164 c. Task No. 716411 d.	9a. ORIGINATOR'S REPORT NUMBER(S) 9b. OTHER REPORT NO(S) (Any other numbers that may be assigned this report) AMRL-TR-67-59	

10. DISTRIBUTION STATEMENT

Distribution of this document is unlimited. It may be released to the Clearinghouse, Department of Commerce, for sale to the general public.

11. SUPPLEMENTARY NOTES	12. SPONSORING MILITARY ACTIVITY Aerospace Medical Research Laboratories Aerospace Medical Div., Air Force Systems Command, Wright-Patterson AFB, O. 45433

13. ABSTRACT

Longitudinal and circular pressure sealing closures were designed and developed for full pressure protective assemblies from a design concept provided by the Aerospace Medical Research Laboratories, invention disclosure number 66/588. This study consisted of (1) designing pressure closure devices, (2) selecting suitable materials for the fabrication of the sealing closure parts and the cylinders to include the closures, (3) selecting an appropriate fabrication process for the closure sealing parts, and (4) fabricating and testing the breadboard and demonstration models containing either the circular or longitudinal closures. An EPDM elastomeric material was found to be suitable for the fabrication of the closure sealing parts which were molded using an established molding technique. The fabricated breadboard and demonstration models passed successfully the required tests wherein leak rates were determined from 0 to 5 psig, and exposure to pressure up to 12 psig, were performed.

DD FORM 1 NOV 65 1473

Security Classification

Security Classification

14. KEY WORDS	LINK A ROLE	LINK A WT	LINK B ROLE	LINK B WT	LINK C ROLE	LINK C WT
Pressure Sealing Closure Design						
Materials Selection						
Molding Procedures						
Fabrication of Sealing Parts and Closures						

Security Classification