198

NAEC-ASL 1111

U. S. NAVAL AIR ENGINEERING CENTER

PHILADELPHIA, PENNSYLVANIA

AD656054

AERONAUTICAL STRUCTURES LABORATORY

Report No. NAEC-ASL-1111

15 June 1967

A METHOD FOR WEIGHT OPTIMIZATION OF FLAT TRUSS-CORE SANDWICH PANELS UNDER LATERAL LOADS

by

J. J. McCoy, S. Shore, and J. R. Vinson
Structural Mechanics Associates
Narberth, Pennsylvania

Contract No. N156-46654

Distribution of this document
is unlimited

RECEIVED
AUG 15 1967
CFSTI

DDC
RECEIVED
AUG 11 1967
C

FOREWORD

This report is one of four reports to be prepared by Structural Mechanics Associates under Navy Contract No. N156-46654. This contract was initiated under Work Unit No. 530/07, "Development of Optimization Methods for the Design of Composite Structures Made from Anisotropic Material" (1-23-96) and was administered under the direction of the Aeronautical Structures Laboratory, Naval Air Engineering Center, with Messrs. R. Molella and A. Manno acting as Project Engineers. The reports resulting from this contract will be forwarded separately. Three reports are completed and cover work from 4 May 1965 to 31 December 1966. The title and approximate forwarding date for each report are as follows:

NAEC-ASL-1109, "Structural Optimization of Corrugated Core and Web Core Sandwich Panels Subjected to Uniaxial Compression," dated 15 May 1967. Forwarding date, June 1967.

NAEC-ASL-1110, "Structural Optimization of Flat, Corrugated Core and Web Core Sandwich Panels Under In-Plane Shear Loads and Combined Uniaxial Compression and In-Plane Shear Loads," dated 1 June 1967. Forwarding date, July 1967.

NAEC-ASL-1111, "A Method for Weight Optimization of Flat Truss Core Sandwich Panels Under Lateral Loads," dated 15 June 1967. Forwarding date, July 1967.

ACCESSION for
CFSTI W E S C TION ☑
DDC BUFF SECTION ☐
UNANNOUNCED ☐
JUSTIFICATION
BY
DISTRIBUTION/AVAILABILITY CODES
DIST. AVAIL. and/or SPECIAL
1

NOTICE

Reproduction of this document in any form by other than naval activities is not authorized except by special approval of the Secretary of the Navy or the Chief of Naval Operations as appropriate.

The following Espionage notice can be disregarded unless this document is plainly marked CONFIDENTIAL or SECRET.

This document contains information affecting the national defense of the United States within the meaning of the Espionage Laws, Title 18, U.S.C., Sections 793 and 794. The transmission or the revelation of its contents in any manner to an unauthorized person is prohibited by law.

SUMMARY

This report presents a method for optimizing on a weight basis flat truss core sandwich panels under lateral loads.

To solve this type of problem on the basis of the methods presented in Reference 1, that is equating the stress level for all failure modes, requires a knowledge of the stress distribution throughout the panel for the given loading. There are no available stress analysis methods, of sufficient sophistication, for corrugated panels under lateral loading, hence a large portion of this report is devoted to the development of such a method of analysis. The method is essentially a deformation method, the basic characteristics of which are described in Reference 2; however, a technique of using Fourier type transformations makes the solution more tractable.

Chapter 1 presents in detail the method of stress analysis of the sandwich panel with a truss core. Chapter 2 discusses the optimization procedure. In Appendix 1 it is demonstrated that the finite, one-dimensional structural element used in the analysis is valid for the type of panel which is considered.

TABLE OF CONTENTS

		Page
Summary		iii
Notation		v
Chapter 1.	ANALYSIS OF TRUSS-CORE SANDWICH PANEL	1
	A. Introduction	1
	B. Basic Assumptions	2
	C. Coordinate Systems and Notation	4
	D. Formulation of the Problem	6
	(1) Equilibrium	6
	(2) Internal Force - Deformation Relationships	7
	(3) Consistent Deformations	10
	E. Methods for Solving Equations	12
	F. Transformation of Equations	14
	G. Matrix Formulation for m-th Coefficient	18
	H. Procedure for Solving Large System of Linear Equations	26
	I. Synthesis of the Final Solution	32
	J. Remarks	32
Chapter 2.	OPTIMUM DESIGN OF TRUSS-CORE SANDWICH PANELS	34
	A. Introduction	34
	B. Design Parameters	38
	C. Failure Criteria	40
	D. Failure Modes	42
	E. Optimization Procedure	45
References		48
Appendix 1.	Governing Equations for One-Dimensional Element	49

NOTATION

${}^{1}A$	Matrix defined by Equation (1.36)
a	Panel dimension in the y direction, inches
b	Panel dimension in the x direction, inches
${}^{2}C$	Stiffness matrix defined by Equation (1.48)
${}^{i}D$	Column matrix of joint displacements referred to i-th coordinate system (i = 1, 2, 3), inches
$\{d^i\}$	Displacement of the i-th joint, inches
e	Number of plate elements in panel
E	Modulus of elasticity, lbs./in.^{2}
$\{F^i\}$	External force per unit distance in x-direction applied to i-th joint, lb./in.
$\{f^i_j\}$	Internal force per unit distance in x-direction applied to i-th joint, by the j-th element, lb./in.
G	Shear modulus, lbs./in.^{2}
${}^{i}G_x$	Column matrix of joint forces defined by Equation (1.43)
${}^{2}G_e$	Column matrix of applied forces defined by Equation (1.47) in the c = 2 coordinate system
h_c	Core depth, inches
K =	$(R)({}^{2}C)(R^T)$. See Equation (1.55)
K^2	Shape factor (dimensionless)
ℓ_i	Width of a plate element [i = c (core) or f (face)], inches
n	Number of joints in panel
${}^{c}P^i, {}^{c}Q^i, {}^{c}R^i$	Components of $\{F^i\}$ referred to coordinate system c where c = 1, 2, or 3, lbs./in.
${}^{c}p^i_j, {}^{c}q^i_j, {}^{c}r^i_j$	Components of $\{f^i_j\}$ referred to coordinate system c, lbs./in.
R	Matrix defined by Equation (1.50)
${}^{i}S$	Column matrix of internal forces defined by Equation (1.40)

NOTATION

${}^{1}A$	Matrix defined by Equation (1.36)
a	Panel dimension in the y direction, inches
b	Panel dimension in the x direction, inches
${}^{2}C$	Stiffness matrix defined by Equation (1.48)
${}^{i}D$	Column matrix of joint displacements referred to i-th coordinate system (i = 1, 2, 3), inches
$\{d^i\}$	Displacement of the i-th joint, inches
e	Number of plate elements in panel
E	Modulus of elasticity, lbs./in.^{2}
$\{F^i\}$	External force per unit distance in x-direction applied to i-th joint, lb./in.
$\{f_j^i\}$	Internal force per unit distance in x-direction applied to i-th joint, by the j-th element, lb./in.
G	Shear modulus, lbs./in.^{2}
${}^{i}G_k$	Column matrix of joint forces defined by Equation (1.43)
${}^{2}G_e$	Column matrix of applied forces defined by Equation (1.47) in the c = 2 coordinate system
h_c	Core depth, inches
K =	$(R)({}^{2}C)(R^T)$. See Equation (1.55)
K^2	Shape factor (dimensionless)
ℓ_i	Width of a plate element [i = c (core) or f (face)], inches
n	Number of joints in panel
${}^{c}P^i, {}^{c}Q^i, {}^{c}R^i$	Components of $\{F^i\}$ referred to coordinate system c where c = 1, 2, or 3, lbs./in.
${}^{c}p_j^i, {}^{c}q_j^i, {}^{c}r_j^i$	Components of $\{f_j^i\}$ referred to coordinate system c, lbs./in.
R	Matrix defined by Equation (1.50)
${}^{i}S$	Column matrix of internal forces defined by Equation (1.40)

CHAPTER 1

ANALYSIS OF TRUSS-CORE SANDWICH PANEL

A. Introduction

The analysis of a complex structure under loading begins with the decomposition of the structure into "basic elements" and assuming that their response to any loading that they are required to sustain is known. Viewed in this light, the problem of determining the behavior of the structure under a specified loading condition, is really a problem of determining what loading will be placed on each "basic element" (i.e. internal loading) as a result of the specified loading being placed on the structure (i.e. external loading).

The determination of distribution of internal loading for a given external loading condition can always be accomplished by invoking two obvious physical requirements. The first is that every element of the structure will remain in equilibrium. The second is that deformations of the basic element as a consequence of the loading placed on them will not violate the basic integrity of the structure.

In implementing this approach to the analysis, it is necessary to choose the basic elements of the structural system,postulate the form of the loading that must be sustained and determine the response of the elements to the loading. Great accuracy in this type of finite element analysis usually requires that the basic elements be as small as possible resulting in a structure consisting of a great number of elements. However, the requirement that the mathematical formulation is tractable may require that the structure be divided into a fewer number of larger basic elements.

B. Basic Assumptions

Consider the truss-core sandwich panel shown in Figure 1, whose geometry is considered as representative of several forms which are used.

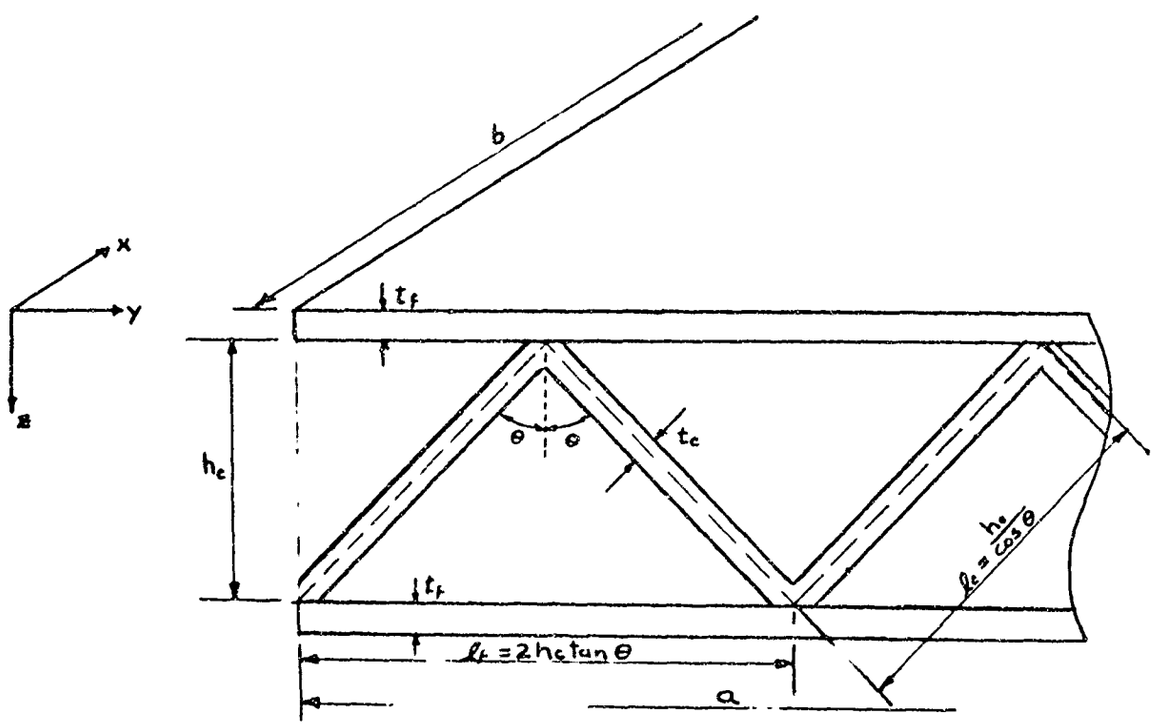

Figure 1

Triangulated Core Sandwich Plate

It is desired to determine the response of this panel to a lateral loading when the panel is supported continuously along the four edge boundaries.

Due to the construction of a truss-core sandwich panel, it is not possible to easily determine the orthotropic properties in the x and y directions for purposes of analysis and for determining stress distributions under lateral loading. Therefore, the formulation of the problem will be in terms of more fundamental structural elements of the system. One such element is a plate element shown in Figure 2.

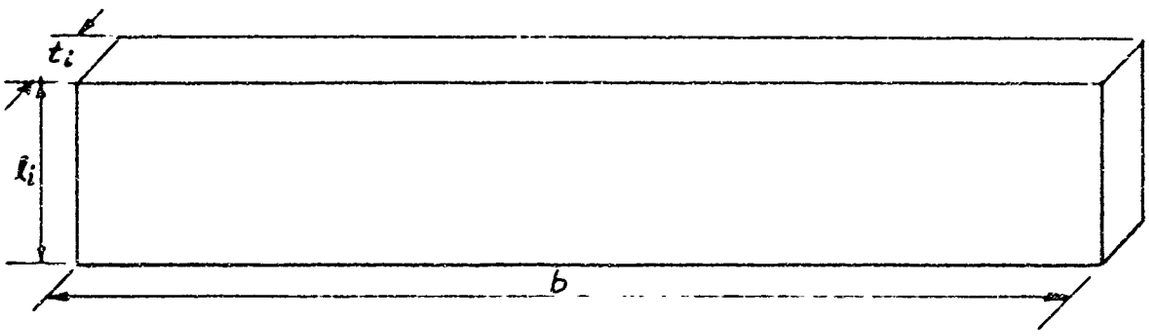

Figure 2

A Plate Element

It is assumed that for the constructions considered

$$t_i << \ell_i << b = O(\lambda) \qquad i = f \text{ or } c$$

where λ is a characteristic length which gives a measure of the rate of spatial variation of all loading placed on these elements, thus it is possible to treat the elements as one-dimensional. This approach, in effect, reduces the problem to a group of coupled one dimensional problems.

Now consider this formulation in greater detail when the basic elements are chosen as described above. A second assumption is made that t_i is so small relative to all other pertinent dimensions that the

resistance of these elements to any deformation which is out of the plane defined by the element is neglected. Consistent with this last assumption, it is further assumed that the basic plate elements are loaded only by in-plane forces distributed along their edges. Finally, the applied lateral load on the panel is replaced by statically equivalent line loads in the x-direction at the locations where the web and face elements intersect.

C. Coordinate Systems and Notation

In Figure 3 is shown: (1) a numbering system which is to be used to identify the elements and joints; and (2) three coordinate systems which are convenient to use at different stages of the analysis. The x-y_c-z_c ($c = 1, 2, 3$) axes are parallel to the principal moment of inertia axes of the cross-sectional areas, also the x axis is parallel to the flute direction of the core and y_i is parallel to the l dimension of the plate elements.

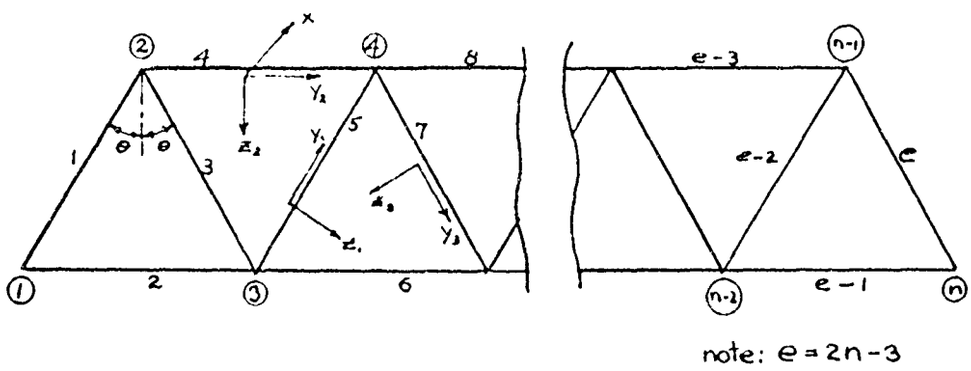

Figure 3

Coordinate Systems

Referring to Figure 3, the following notation is introduced:

e = number of plate elements in panel

n = number of joints in panel

$\{F^i\}$ = external force per unit distance in x direction applied to the i-th joint

${}^cP^i, {}^cQ^i, {}^cR^i$ components of $\{F^i\}$ referred to coordinate system c where c = 1, 2 or 3

$\{f^i_j\}$ internal force per unit distance in x direction applied to i-th joint by j-th element

${}^cp^i_j, {}^cq^i_j, {}^cr^i_j$ components of $\{f^i_j\}$ referred to coordinate system c

$$\left.\begin{aligned} \pi_j &= {}^{c_j}p^k_j + {}^{c_j}p^i_j \\ \rho_j &= {}^{c_j}p^k_j - {}^{c_j}p^i_j \\ \sigma_j &= {}^{c_j}q^k_j + {}^{c_j}q^i_j \\ \tau_j &= {}^{c_j}q^k_j - {}^{c_j}q^i_j \end{aligned}\right\} \qquad (1.0\ a)$$

define the internal forces acting on j-th element. Note that i and k refers to the two joints defining j with k > i. The subscript j on c denotes that the coordinate system to which $\{f^i_j\}$ is referred is chosen so that the y axis is parallel to the direction of the j-th element.

$\{d^i\}$ = displacement of the i-th joint

${}^cu^i, {}^cv^i, {}^cw^i$ = components of $\{d^i\}$ referred to coordinate system c

$$\left.\begin{aligned} \alpha_j &= \left({}^{c_j}u^k + {}^{c_j}u^i\right)\tfrac{1}{2} \\ \beta_j &= \left({}^{c_j}u^k - {}^{c_j}u^i\right)\tfrac{1}{2} \\ \gamma_j &= \left({}^{c_j}v^k + {}^{c_j}v^i\right)\tfrac{1}{2} \\ \delta_j &= \left({}^{c_j}v^k - {}^{c_j}v^i\right)\tfrac{1}{2} \end{aligned}\right\} \qquad (1.0\ b)$$

define the state of deformation of j-th element. Again i and k refer to the two joints defining j with k > i. The subscript j on c has the same meaning as above.

D. Formulation of Problem

The problem to be solved is stated as follows: Given the structure and either the external force per unit distance to be applied to each joint or the resulting displacement to be obtained at each joint, find the resulting internal force distribution. This report will concentrate on solving the problem when the external forces are prescribed at all joints.

It was pointed out in the introduction that the solution is obtained by invoking the physical requirements of equilibrium of all points in the structure and ensuring continuity (maintaining structural integrity) throughout the structure under loading.

(1) Equilibrium

The equilibrium requirement applied to each of the joints results in the following set of algebraic equations which expressed in vector form are

$$\sum_j \{f_j^i\} + \{F^i\} = \{0\} \qquad i = 1, \cdots, n \qquad (1.1)$$

In these equations the summation is carried out over all elements (j) which frame into the i-th joint. Equations (1.1) constitute a set of linear algebraic equations on the unknowns $\{f_j^i\}$. To ascertain whether they are sufficient to determine the unknowns* requires us to simply count equations and unknowns. There are obviously 3n scalar equations, and since there are e (= 2n - 3) elements, there are 2e (= 4n - 6) vector unknowns. Note that by virtue of the assumption that no elements can sustain a force perpendicular to the plane defined

*See Reference 2.

by the element, each of the vectors $\{f_j^i\}$ is confined to be in a known plane, hence only two scalar unknowns are associated with each $\{f_j^i\}$. The total number of unknowns, therefore, is $4e = 8n - 12$ which is more than the number of equations if $n > 2$.

Referring these n vector equations (1.1) to coordinate system $c = 2$, the following 3n scalar equations result:

$$\sum_j {}^2p_j^i + {}^2P^i = 0 \qquad i = 1, \cdots n \qquad (1.1\ a)$$

$$\sum_j {}^2q_j^i + {}^2Q^i = 0 \qquad i = 1, \cdots n \qquad (1.1\ b)$$

$$\sum_j {}^2r_j^i + {}^2R^i = 0 \qquad i = 1, \cdots n \qquad (1.1\ c)$$

(2) Internal Force - Deformation Relationships

Of all of the sets of unknowns that will satisfy the equilibrium requirement expressed by Equations (1.1), the one that will represent the actual distribution of internal forces in the structure gives rise to a deformation for each of the basic elements that will not violate consistent deformations of the structure. To apply such conditions the deformation of each element in terms of the internal forces acting on it must be derived.

Consider the j-th element together with the associated coordinate system, relevant dimensions and the loads to which it is subjected as shown in Figure 4a.

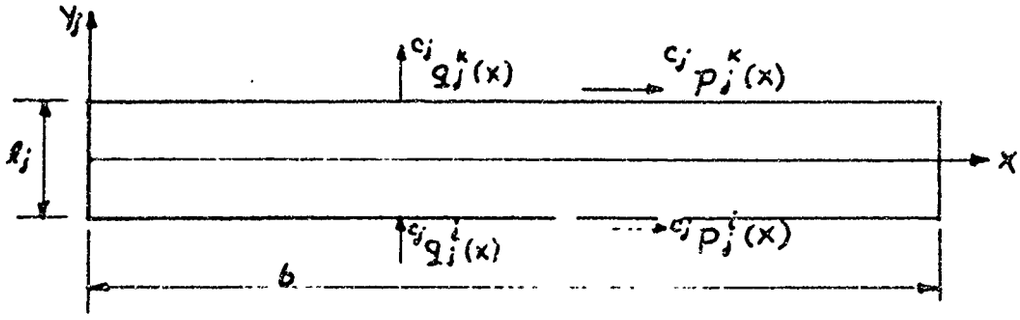

Figure 4a

Due to the assumption of a linear system, it may be taken as the superposition of the following three problems shown in Figures 4b, 4c, and 4d.

I.

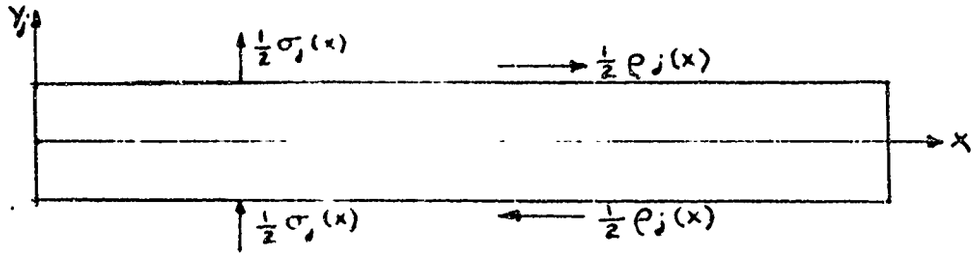

Figure 4b

where:

$$\sigma_j(x) = {}^{c_j}q_j^k(x) + {}^{c_j}q_j^i(x) \qquad j = 1, \cdots, e = 2n-3 \quad (1.2)$$

$$\rho_j(x) = {}^{c_j}p_j^k(x) - {}^{c_j}p_j^i(x) \qquad j = 1, \cdots, e = 2n-3 \quad (1.3)$$

II.

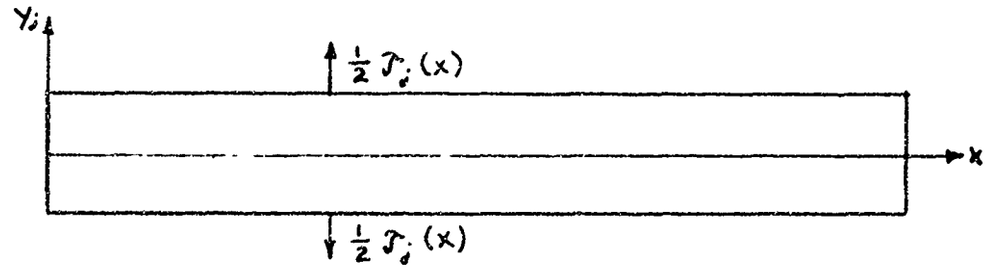

Figure 4c

where

$$\tau_j(x) = {}^{c_j}q_j^{k}(x) - {}^{c_j}q_j^{i}(x) \qquad j=1,\cdots e=2n-3 \quad (1.4)$$

III.

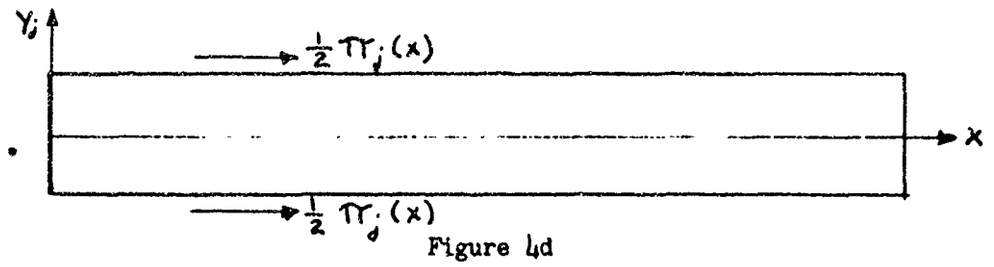

Figure 4d

where

$$\pi_j(x) = {}^{c_j}p_j^{k}(x) + {}^{c_j}p_j^{i}(x) \qquad j=1,\cdots e=2n-3 \quad (1.5)$$

Subject to the restriction that $\ell << b$ and $\ell << \lambda$, where λ is some characteristic length associated with the loading, it is permissable to analyze each of these problems by a suitable one dimensional theory. The justification of such a step together with a derivation of the appropriate one dimensional theory is given in Appendix I. A summary is given below:

Problem I (Fig. 4b) gives rise to a deformation characterized by a displacement in the y_j direction which does not vary with y and a displacement in the x direction which varies linearly with y_j $\left[\text{i.e. displacement} = \frac{2y_j}{\ell_j}\beta_j(x)\right]$. The relationship between $\sigma_j(x), \rho_j(x)$ and $\gamma_j(x), \beta_j(x)$, as derived in Appendix I, is given by:

$$\sigma_j(x) = -2K^2 G_j t_j \frac{d}{dx}\left[\beta_j(x)\right] - K^2 G_j \ell_j t_j \frac{d^2}{dx^2}\left[\gamma_j(x)\right] \qquad (1.6)$$

$$j = 1, \quad \cdot, e = 2n-3$$

$$\rho_j(x) = \left[\frac{4K^2 G_j t_j}{\ell_j} - \frac{2G_j \ell_j t_j}{3(1-\nu_j)} \frac{d^2}{dx^2}\right]\left[\beta_j(x)\right] + 2K^2 G_j t_j \frac{d}{dx}\left[\gamma_j(x)\right] \qquad (1.7)$$

$$j = 1, \cdots, e = 2n-3$$

In Equations (1.6) and (1.7) G_j and ν_j refer to the shear modulus and the Poisson's ratio of the j-th element whereas ℓ_j and t_j are the height and thickness of the j-th element respectively. K^2 represents a factor to account for the shape of the cross-section.

Problem II (Fig. 4c) gives rise to a deformation which is characterized by a displacement in the y_j direction which varies linearly with y_j $\left[\text{i.e. displacement} = \frac{2y_j}{\ell_j}\delta_j(x)\right]$. The relationship between $\tau_j(x)$ and $\delta_j(x)$, as derived in Appendix I, is

$$\tau_j(x) = \frac{8G_j t_j}{(1-\nu_j)\ell_j}\delta_j(x) \qquad (1.8)$$

Problem III (Fig. 4d) gives rise to a deformation which is characterized by a displacement in the x direction which does not vary with y_j. The relationship between $\pi_j(x)$ and $\alpha_j(x)$, as derived in Appendix I, is

$$\pi_j(x) = \frac{2G_j \ell_j t_j}{(1+\nu_j)} \frac{d^2}{dx^2}\left[\alpha_j(x)\right] \qquad j = 1, \cdots, e = 2n-3 \qquad (1.9)$$

(3) <u>Consistent Deformations</u>

In Section C, internal deformations are defined that

are associated with each distribution of internal forces. In order to maintain the integrity of the structure only those states of deformations which are associated with a unique displacement for each joint will be allowed. This requirement will be met if $\alpha_j, \beta_j, \gamma_j$ and δ_j can be defined in terms of ${}^{c_j}u^i, {}^{c_j}u^k, {}^{c_j}v^i$ and ${}^{c_j}v^k$ according to:

$$\alpha_j = ({}^{c_j}u^k + {}^{c_j}u^i)\frac{1}{2} \qquad j = 1, \cdots, e = 2n-3 \quad (1.10)$$

$$\beta_j = ({}^{c_j}u^k - {}^{c_j}u^i)\frac{1}{2} \qquad j = 1, \cdots, e = 2n-3 \quad (1.11)$$

$$\gamma_j = ({}^{c_j}v^k + {}^{c_j}v^i)\frac{1}{2} \qquad j = 1, \cdots, e = 2n-3 \quad (1.12)$$

$$\delta_j = ({}^{c_j}v^k - {}^{c_j}v^i)\frac{1}{2} \qquad j = 1, \cdots, e = 2n-3 \quad (1.13)$$

In Equations(1.10) through(1.13), i and k refer to the joints at either end of the element j and C_j refers to the coordinate system with x, y plane parallel to plane defined by element. See Figure 4a.

Each of the equations in the system (1.1) through (1.13) is either a linear algebraic equation or a linear ordinary differential equation which are obviously independent of each other. To show, therefore, that the system is sufficient to uniquely determine all of the unknowns again requires a count of available equations and unknowns. It has already been shown that Equation (1.1) represents 3n equations and 8n - 12 unknowns. Equations (1.2) through (1.5) give 8n - 12 more equations but also introduces 8n - 12 more unknowns [i.e. σ_j, ρ_j, τ_j, and π_j ; $j = 1, \cdots, e = 2n-3$]. Equations (1.6) through (1.9) give 8n - 12 more equations and also 8n - 12 more unknowns [i.e. $\alpha_j, \beta_j, \gamma_j$, and δ_j

$j = 1, \cdots, 2n-3$]. Finally, Equations (1.10) through (1.13) give $8n - 12$ additional equations while introducing $3n$ unknowns [i.e. the 3 components of the n displacement vectors $\{d^i\}$, $i = 1, \cdots, n$]. Notice that $\{d^i\}$ $(i = 1, \cdots, n)$ completely determines the right hand sides of Equations (1.10) through (1.13). Adding equations and unknowns gives $(27n - 36)$ of each, hence, the system possesses a unique solution.

E. Methods for Solving Equations

There are several ways for solving the above system of equations. Perhaps the most direct is to use Equations (1.2) through (1.5) to obtain $\{f_j^i\}$ in terms of σ_j, ρ_j, τ_j, and π_j. Then by direct substitution of Equations (1.6) through (1.9) into the result, we obtain $\{f_j^i\}$ in terms of $\alpha_j, \beta_j, \gamma_j$, and δ_j. Next we use Equations (1.10) through (1.13) to obtain $\{f_j^i\}$ in terms of $\{d^i\}$. Finally, substituting this result into Equation (1.1) will give n vector equations on the n unknown displacement vectors $\{d^i\}$ $(i = 1, \cdots, n)$. Once this system of equations has been solved and the displacement of each of the joints obtained, then, all of the other unknowns are obtainable by direct calculations as dictated by Equations (1.2) through (1.13).

Without actually carrying out the above substitutions in detail it is readily apparent that the final system of equations (3n scalar equations) constitute a system of linear ordinary differential equations with constant coefficients. The theory for handling such systems of equations is well defined and the method of attack is straight-forward. In the present problem, however, the straight-forward

procedure would become extremely complicated by virtue of the large number of equations to be handled. Undoubtedly, the large number of manipulations that will eventually be required will necessitate the use of a high speed digital computer. It is necessary, therefore, that the differential equations be transformed into algebraic equations.

The system of n linear ordinary differential equations may be transformed into an infinite system of linear algebraic equations in the following manner. By introducing a set (or sets) of functions which are complete over the interval $0 \leq x \leq b$ and then taking the unknown solutions as linear combinations of the members of one or another of the sets, the problem transforms from that of finding a set of unknown functions of x to one of finding the coefficients in the above mentioned linear sums. The equations governing these coefficients may be obtained by direct substitution of a generic form of the linear sum. The result will be, in general, an infinite system of linear algebraic equations. Thus we have reduced the problem to solving algebraic equations but have increased the number of equations to an infinite number which represents no advantage unless the number of equations can be truncated in some way or unless the equations can be uncoupled from one another either singly or in finite blocks. For the present problem we can introduce sets of functions for which the latter occurs provided we are willing to let the problem dictate to some extent the boundary condition at the ends $x = o$ and $x = b$. Since, in practice, the boundary conditions are not clearly defined, for example, clamped or hinged, this last restriction is not very severe. See further discussion in Appendix I.

F. Transformation of Equations

The first step is to introduce the following sets of functions which are complete and orthogonal over the interval $0 \leq x \leq b$

$$\{\sin \omega_m x\}$$

and

$$\{\cos \omega_m x\}$$

where $\omega_m = \frac{m\pi}{b}$ $\qquad m = 1, 2, \cdots, \infty$

Next we expand all of the variables in Equations (1.1) through (1.13) in terms of one or the other of the above sets according to Table 1.

Table 1

Sine	Cosine
y and z components of $\{F^i\}$	x component of $\{F^i\}$
y and z components of $\{f_j^i\}$	x component of $\{f_j^i\}$
σ_j	ρ_j
τ_j	π_j
γ_j	β_j
δ_j	α_j
y and z components of $\{d^i\}$	x component of $\{d^i\}$

Introducing the notation

$$\phi(x) = \sum_{m=1}^{\infty} (\phi)_m^s \sin \omega_m x \tag{1.14}$$

$$\phi(x) = \sum_{m=0}^{\infty} (\phi)_m^c \cos \omega_m x \tag{1.15}$$

By substitution of Equations (1.14) and (1.15) into Equations (1.1) through (1.13) and making use of orthogonality when appropriate, the following system of algebraic equations are obtained. Equation (1.1)

is referred to coordinate system c = 2, which is taken as the global reference axes.

$$\sum_j ({}^2p_j^i)_m^c + ({}^2P^i)_m^c = 0 \qquad i = 1, \cdots, n \quad m = 0, \cdots, \infty \tag{1.16}$$

$$\sum_j ({}^2q_j^i)_m^s + ({}^2Q^i)_m^s = 0 \qquad i = 1, \cdots, n \quad m = 0, \cdots, \infty \tag{1.17}$$

$$\sum_j ({}^2r_j^i)_m^s + ({}^2R^i)_m^s = 0 \qquad i = 1, \cdots, n \quad m = 0, \cdots, \infty \tag{1.18}$$

$$(\sigma_j)_m^s = ({}^{c_j}q_j^k)_m^s + ({}^{c_j}q_j^i)_m^s \qquad j = 1, \cdots, e \quad m = 0, \cdots, \infty \tag{1.19}$$

$$(\rho_j)_m^c = ({}^{c_j}p_j^k)_m^c - ({}^{c_j}p_j^i)_m^s \qquad j = 1, \cdots, e \quad m = 0, \cdots, \infty \tag{1.20}$$

$$(\tau_j)_m^s = ({}^{c_j}q_j^k)_m^s - ({}^{c_j}q_j^i)_m^s \qquad j = 1, \cdots, e \quad m = 0, \cdots, \infty \tag{1.21}$$

$$(\pi_j)_m^c = ({}^{c_j}p_j^k)_m^c + ({}^{c_j}p_j^i)_m^c \qquad j = 1, \cdots, e \quad m = 0, \cdots, \infty \tag{1.22}$$

$$(\sigma_j)_m^s = \left[2K^2G_jt_j\omega_m\right](\beta_j)_m^c + \left[K^2G_j\ell_jt_j\omega_m^2\right](\gamma_j)_m^s \qquad j = 1, \cdots, e \quad n = 0, \cdots, \infty \tag{1.23}$$

$$(\rho_j)_m^c = \left[\frac{4K^2G_jt_j}{\ell_j} + \frac{2G_j\ell_jt_j}{3(1-\nu_j)}\omega_m^2\right](\beta_j)_m^c + \left[2K^2G_jt_j\omega_m\right](\gamma_j)_m^s \qquad j = 1, \cdots, e \quad n = 0, \cdots, \infty \tag{1.24}$$

$$(\tau_j)_m^s = \left[\frac{8G_jt_j}{(1-\nu_j)\ell_j}\right](\delta_j)_m^s \qquad j = 1, \cdots, e \quad n = 0, \cdots, \infty \tag{1.25}$$

$$(\pi_j)_m^c = \left[\frac{-2G_j\ell_jt_j}{(1+\nu_j)}\omega_m^2\right](\alpha_j)_m^c \qquad j = 1, \cdots, e \quad m = 0, \cdots, \infty \tag{1.26}$$

$$(\alpha_j)_m^c = \frac{1}{2}\left[\left({}^{c_j}u^k\right)_m^c + \left({}^{c_j}u^i\right)_m^c\right] \qquad \begin{matrix} j = 1, \cdots, e \\ m = 0, \cdots, \infty \end{matrix} \tag{1.27}$$

$$(\beta_j)_m^c = \frac{1}{2}\left[\left({}^{c_j}u^k\right)_m^c - \left({}^{c_j}u^i\right)_m^c\right] \qquad \begin{matrix} j = 1, \cdots, e \\ m = 0, \cdots, \infty \end{matrix} \tag{1.28}$$

$$(\gamma_j)_m^s = \frac{1}{2}\left[\left({}^{c_j}v^k\right)_m^s + \left({}^{c_j}v^i\right)_m^s\right] \qquad \begin{matrix} j = 1, \cdots, e \\ m = 0, \cdots, \infty \end{matrix} \tag{1.29}$$

$$(\delta_j)_m^s = \frac{1}{2}\left[\left({}^{c_j}v^k\right)_m^s - \left({}^{c_j}v^i\right)_m^s\right] \qquad \begin{matrix} j = 1, \cdots, e \\ m = 0, \cdots, \infty \end{matrix} \tag{1.30}$$

Equations (1.16) to (1.30) are the equations governing the coefficients in the expansions of our unknown solution functions. As before in dealing with equations (1.1) to (1.13) the above equations can be solved by taking as the basic unknowns the components of the displacements of the joints $\{d^i\}$ $(i = 1, \cdots, n)$, solving for them, and then obtaining all other unknowns by direct calculation. Referred to the $c = 2$ coordinate system, the basic unknowns are the functions ${}^2u^i(x)$, ${}^2v^i(x)$, and ${}^2w^i(x)$ $[i = 1, \cdots, n]$ or the coefficients $({}^2u^i)_m^c$, $({}^2v^i)_m^s$ and $({}^2w^i)_m^c$ $[i = 1, \cdots n, m = 0, \cdots, \infty]$. The procedure is: (1) substitute the latter coefficients into Equations (1.27) to (1.30) and introducing a coordinate transformation when necessary; (2) substitute the results into Equations (1.23) to (1.26); (3) substitute these results into Equations (1.19) to (1.22); and (4) finally substitute these results into Equations (1.16) to (1.18)

to obtain an infinite system of algebraic equations on the infinite number of unknowns. Note, however, that the equations governing $({}^2u^i)_m^c$, $({}^2v^i)_m^s$, and $({}^2w^i)_m^c$ for one particular value of m are not coupled to those for a different value of m. This means that the infinite number of equations uncouple in blocks of 3n linear algebraic equations on the 3n unknowns $\{$i.e. $({}^2u^i)_m^c$, $({}^2v^i)_m^s$, $({}^2w^i)_m^s$ $[i = 1, \cdots n;\ m = \text{some integer}]\}$ and the problem reduces to a series of problems involving 3n linear algebraic equations. Of course, for an exact answer, we must solve an infinite number of such problems. For practical purposes, however, only the first few coefficients will offer a significant contribution, hence, solving only a few problems will give a sufficiently accurate answer.

The question of the boundary conditions at x = 0 and x = b has to be answered. The sets of functions used in our expansions will result in

$$\gamma_j(x) = \frac{d\beta(x)}{dx} = \frac{d\alpha(x)}{dx} = 0$$

regardless of the values of the coefficients obtained in solving the above set of equations. This condition corresponds to simple supports for the flexure deformation of the basic elements; free ends for extension in the x direction for the basic elements and no extension in the y (width) direction for the basic elements. Although the actual conditions may be slightly different, the error introduced by assuming these conditions should be confined to the immediate vicinity of the supports. Notice that other boundary conditions could be treated but that would require placing certain restrictions on the values of the

coefficients that are to be obtained. These restrictions would destroy the uncoupling achieved above which would necessitate some type of iteration scheme for a solution.

G. Matrix Formulation for m-th Coefficient

A matrix formulation is presented now to obtain the solution of the system of equations involving the coefficients of the infinite series introduced in Section F.

As indicated in Section F, the basic unknowns are the appropriate transform of the components of $\{d^i\}$ $(i = 1, \cdots, n)$ referred to the $c = 2$ coordinate system. Arranged in a column matrix of 3n elements, the unknowns to be determined are

$$
{}^2D = \begin{bmatrix} ({}^2u^1)^c_m \\ ({}^2u^2)^c_m \\ \vdots \\ ({}^2u^n)^c_m \\ ({}^2v^1)^s_m \\ ({}^2v^2)^s_m \\ \vdots \\ ({}^2v^n)^s_m \\ ({}^2w^1)^s_m \\ ({}^2w^2)^s_m \\ \vdots \\ ({}^2w^n)^s_m \end{bmatrix} \tag{1.31}
$$

The first step is to introduce transformation matrices from the $c = 2$ system to the $c = 1$ system and the $c = 3$ system.

$$T_{12} = \begin{bmatrix} [I] & [O] & [O] \\ [O] & \cos\theta[I] & -\sin\theta[I] \\ [O] & \sin\theta[I] & \cos\theta[I] \end{bmatrix}$$

and

$$T_{32} = \begin{bmatrix} [I] & [O] & [O] \\ [O] & \cos\theta[I] & \sin\theta[I] \\ [O] & -\sin\theta[I] & \cos\theta[I] \end{bmatrix} \tag{1.32}$$

where:

θ is shown on Figure 1

$[O]$ is the n x n null matrix

$[I]$ is the n x n unit matrix.

The appropriate transformation equations, as becomes apparent by expansion, are

$$\begin{aligned} {}^{1}D &= T_{12}\,{}^{2}D \\ {}^{3}D &= T_{32}\,{}^{2}D \end{aligned} \tag{1.33}$$

${}^{1}D$ and ${}^{3}D$ are defined by the matrix given in Equation (1.31) except the scalar elements are given with respect to the c = 1 and c = 3 axes respectively.

To represent Equations (1.27) through (1.30) in matrix form, subdivide the elements of the structure into three groups according to which coordinate system has the y - x plane parallel to the plane of the element. Referring to Figure 3, the groups have the following numbers.

Group 1: 1, 5, 9, · · · , e - 2

Group 2: 2, 4, 6, · · · , e - 1

Group 3: 3, 7, · · · · , e

Groups 1 and 3 each have $\frac{e+1}{4} = \frac{n-1}{2}$ members whereas Group 2 has $\frac{e-1}{2} = n - 2$ members. Now for each of the above groups a rectangular matrix is constructed with the number of rows equal to the number of members in the group and the number of columns equal to the number of joints in the structure according to the following rule. Associate each row with a member of the group (i.e. first row with element 1, second row with element 5, etc.) and each column with a joint of the structure. Now we set every matrix element in the row associated with a given structural element equal to zero except the two which correspond to the joints into which the structural element is framed. These are set equal to +1 or -1 according to whether the joint number is larger or smaller respectively. Restricting our attention to Group 1, the matrix, so defined, is

$$
{}'a = \begin{bmatrix}
-1 & 1 & 0 & 0 & 0 & \cdots & 0 \\
0 & 0 & -1 & 1 & \cdots & \cdots & 0 \\
0 & 0 & 0 & 0 & -1 & \cdots & 0 \\
\vdots & \vdots & & & & & \vdots \\
0 & 0 & \cdots & \cdots & -1 & 1 & 0
\end{bmatrix}
$$

With the aid of this matrix the equations (1.27) through (1.30) for elements that fall within the first group may be written as

$$
{}'E = \left[{}'A\,{}'D\right]^{\frac{1}{2}} \tag{1.34}
$$

where

$$
{}^{1}E = \begin{bmatrix} (\alpha_1)_m^e \\ (\alpha_5)_m^e \\ \vdots \\ (\alpha_{e-2})_m^e \\ (\beta_1)_m^e \\ (\beta_5)_m^e \\ \vdots \\ (\beta_{e-2})_m^e \\ (\gamma_1)_m^s \\ (\gamma_5)_m^s \\ \vdots \\ (\gamma_{e-2})_m^s \\ (\delta_1)_m^s \\ (\delta_5)_m^s \\ \vdots \\ (\delta_{e-2})_m^s \end{bmatrix} \tag{1.35}
$$

and

$$
{}^{1}A = \begin{bmatrix} [{}^{1}\bar{a}] & [0] & [0] \\ [{}^{1}a] & [0] & [0] \\ [0] & [{}^{1}\bar{a}] & [0] \\ [0] & [{}^{1}a] & [0] \end{bmatrix} \tag{1.36}
$$

in which $[{}^{1}\bar{a}]$ is obtained from ${}^{1}a$ by replacing all -1 with a +1 and $[0]$ is an $\left(\frac{n-1}{2} \times n\right)$ null matrix. That matrix equation (1.34) does indeed represent Equations (1.27) through (1.30) for the numbers of Group 1 may be seen by direct expansion. Similar results may be obtained for the other two groups of members.

The deformation of the elements in the three groups are expressible in terms of the ${}^{2}D$ column matrix by Equations (1.33) and (1.34) as follows:

$$
{}^{i}E = {}^{i}A\, T_{i2}\, {}^{2}D \qquad (\text{note } T_{22} = [I]) \tag{1.37}
$$

To represent Equations (1.23) through (1.26) in matrix form the subdivision introduced in the preceeding paragraphs is kept but introduced here is the restriction that the <u>properties of all elements in Groups 1 and 3 are the same and properties of all elements in Group 2 are the same</u>. Under this restriction the following matrices are introduced.

$$
{}^{i}Z = \begin{bmatrix}
\left(\frac{-2G_j \ell_j t_j \omega_m^2}{1+\nu_j}\right)[I] & [0] & [0] & [0] \\
[0] & \left(\frac{4K^2 G_j t_j}{\ell_j} + \frac{2G_j \ell_j t_j}{3(1-\nu_j)}\omega_m^2\right)[I] & \left(2K^2 G_j t_j \omega_m\right)[I] & [0] \\
[0] & \left(2K^2 G_j t_j \omega_m\right)[I] & \left(K^2 G_j \ell_j t_j \omega_m^2\right)[I] & [0] \\
[0] & [0] & [0] & \left(\frac{8G_j t_j}{(1-\nu_j)\ell_j}\right)[I]
\end{bmatrix} \tag{1.38}
$$

where the index i (i = 1, 2, 3) indicates the group of members being considered $[0]$ and $[I]$ are square null and unit matrices respectively with number of rows and columns equal to the number of members of the group. Consequently, for those elements of Group i, the Equations (1.23) through (1.26) may be written as

$$ {}^{i}S = {}^{i}Z\,{}^{i}E \tag{1.39} $$

where

$$ {}^{i}S = \begin{bmatrix} (\pi_1)_m^c \\ (\pi_5)_m^c \\ \vdots \\ (\pi_r)_m^c \\ (\rho_1)_m^c \\ (\rho_5)_m^c \\ \vdots \\ (\rho_1)_m^c \\ (\sigma_1)_m^s \\ (\sigma_5)_m^s \\ \vdots \\ (\sigma_r)_m^s \\ (\tau_1)_m^s \\ (\tau_5)_m^s \\ \vdots \\ (\tau_r)_m^s \end{bmatrix} \tag{1.40} $$

Note : Group 1, $r = e-2$
Group 2, $r = e$
Group 3, $r = e-1$

Combining Equations (1.37) and (1.39), the internal forces in the elements of all three groups may be expressed in terms of ${}^{2}D$ according to

$$ {}^{i}S = {}^{i}Z\,{}^{i}A\,T_{i2}\,{}^{2}D \qquad (i = 1, 2, 3, \text{ and } T_{22} = [I]) \tag{1.41} $$

The final step is to obtain the forces that arise at each joint due to the internal forces in the elements, sum all of these forces and substitute in Equations (1.16), (1.17), and (1.18). This must be done separately for each of the three groups previously defined since each group will give the joint forces with reference to a different coordinate system. Consider initially the first group of members then it may be shown by direct expansion that

$$ {}^{1}G_{1} = {}^{1}A^{T}\,{}^{1}S \tag{1.42} $$

where ${}^{1}A^{T}$ is the transpose of the matrix ${}^{1}A$ and ${}^{1}G_{1}$, is a column matrix representing the sum of all forces acting on the joints by elements in the first group, referred to the coordinate system c = 1.

$$ G_{1} = \begin{bmatrix} \sum_{j=1,5,9}^{e-2} ({}^{1}p_{j}^{1})_{m}^{c} \\ \sum_{j=1,5,9}^{e-2} ({}^{1}p_{j}^{2})_{m}^{c} \\ \vdots \\ \sum_{j=1,5,9} ({}^{1}p_{j}^{n})_{m}^{c} \\ \sum_{j=1,5,9}^{e-2} ({}^{1}q_{j}^{1})_{m}^{s} \\ \sum_{j=1,5,9}^{e-2} ({}^{1}q_{j}^{2})_{m}^{s} \\ \vdots \\ \sum_{j=1,5,9}^{e-2} ({}^{1}q_{j}^{n})_{m}^{s} \\ \sum_{j=1,5,9}^{e-2} ({}^{1}r_{j}^{1})_{m}^{s} \\ \sum_{j=1,5,9}^{e-2} ({}^{1}r_{j}^{2})_{m}^{s} \\ \vdots \\ \sum_{j=1,5,9}^{e-2} ({}^{1}r_{j}^{n})_{m}^{s} \end{bmatrix} \tag{1.43} $$

A similar expression may be written for the other two groups, so that in general

$$ {}^{i}G_{k} = {}^{i}A^{T}\,{}^{i}S \tag{1.44} $$

where i = coordinate system

k = group number of members.

To add the effects of the three groups requires that all forces be referred to the same coordinate system (i.e. c = 2 system). This is done by using the transformation matrices T_{12} and T_{32} given in Equation (1.32). For the contribution of group k, we have

$$ {}^{2}G_{k} = (T_{k2})^{T}\,{}^{1}G_{k} \tag{1.45} $$

where $(T_{k2})^{T}$ is the transpose of T_{k2} and $T_{22} = [I]$.

Adding together ${}^{2}G_{1}$, ${}^{2}G_{2}$, and ${}^{2}G_{3}$, the total force applied at each joint by the basic elements is obtained and Equations (1.16) through (1.18) reduce to

$$ {}^{2}G_{1} + {}^{2}G_{2} + {}^{2}G_{3} + {}^{2}G_{E} = 0 \tag{1.46} $$

where ${}^{2}G_{E}$ is the external force applied referred to the c = 2 coordinate system. That is,

$$ {}^{2}G_{E} = \begin{bmatrix} ({}^{2}P^{1})^{c}_{m} \\ ({}^{2}P^{2})^{c}_{m} \\ \vdots \\ ({}^{2}P^{n})^{c}_{m} \\ ({}^{2}Q^{1})^{s}_{m} \\ ({}^{2}Q^{2})^{s}_{m} \\ \vdots \\ ({}^{2}Q^{n})^{s}_{m} \\ ({}^{2}R^{1})^{s}_{m} \\ ({}^{2}R^{2})^{s}_{m} \\ \vdots \\ ({}^{2}R^{n})^{s}_{m} \end{bmatrix} \tag{1.47} $$

Combining all of the previous results ${}^2G_1$, ${}^2G_2$ and ${}^2G_3$ are expressed in terms of the single unknown matrix ${}^2D$ and the result substituted in Equation (1.46) to give the matrix equation

$$ {}^2C\,{}^2D + {}^2G_E = 0 \tag{1.47} $$

where

$$ {}^2C = (T_{12})^T({}^1A)^T({}^1Z)({}^1A)(T_{12}) + ({}^2A)^T({}^2Z)({}^2A) + (T_{32})^T({}^3A)^T({}^3Z)({}^3A)(T_{32}) \tag{1.48} $$

is the stiffness matrix. The matrix of unknown deflections can now be obtained from Equation (1.47) in terms of the inverse of ${}^2C$ and is expressed as

$$ {}^2D = -({}^2C)^{-1}({}^2G_E) \tag{1.49} $$

Since all of the desired unknown quantities are obtainable from ${}^2D$ by direct calculation, Equation (1.49) represents the formal solution to the problem.

Before proceeding any further, the matrix formulation is summarized in Figure 4. The lines represent matrix products with the multipliers being indicated over the line. Joining of two or more lines indicates a summation.

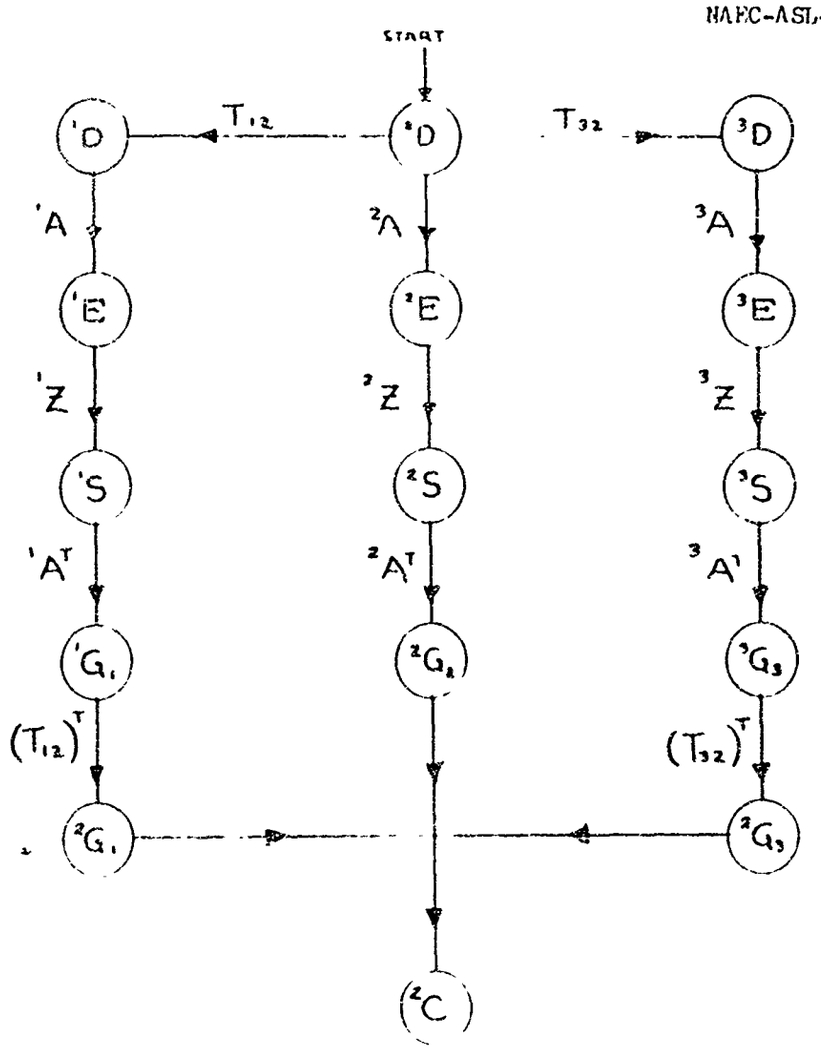

Figure 4

Summary of Matrix Computations

H. Method for Solving Large System of Linear Equations

As already stated, the formal solution to the problem is contained in the matrix equation (1.49). Implicit in this simple matrix equation, however, is an inversion of the large order matrix ^2C. Indeed, in carrying out the solution of a given problem it is numerically easier

not to make use of the formal solution of the system of equations represented by Equation (1.47) (i.e. not to obtain $({}^2C)^{-1}$) but to obtain the solution in a different manner. In this section an algorithm to accomplish this goal is developed.

The following interpretation can be given an element of the ${}^2C$ matrix. ${}^2C_y$ represents a component of the net internal force which acts on a joint which is defined by i for a displacement field which consists of a unit displacement in a direction and for a joint defined by j while all other deflections are kept zero. It is obvious, therefore, that unless the joint defined by j is directly connected to the joint defined by i by an element of the structure, then ${}^2C_y$ must be zero. This leads to the conclusion that the majority of elements of the ${}^2C_y$ matrix are zero. The solution of the equations represented by (1.47) can be most easily accomplished by partitioning into smaller groups of coupled equations.

Before accomplishing this partitioning it would be helpful to first recast the formulation in such a manner that all of the non-zero elements of the ${}^2C$ matrix cluster around the main diagonal. This is done by introducing the following square matrix which contains only ones and zeroes.

$$R = \begin{bmatrix} \delta_j^1 & j=1,\cdots,3n \\ \delta_j^{n+1} & j=1,\cdots,3n \\ \delta_j^{2n+1} & j=1,\cdots,3n \\ \delta_j^{2} & j=1,\cdots,3n \\ \delta_j^{n+2} & j=1,\cdots,3n \\ \delta_j^{2n+2} & j=1,\cdots,3n \\ \vdots & \\ \delta_j^{n} & j=1,\cdots,3n \\ \delta_j^{2n} & j=1,\cdots,3n \\ \delta_j^{3n} & j=1,\cdots,3n \end{bmatrix} \tag{1.50}$$

where the Kronecker delta

$$\begin{aligned} \delta_j^i &= 1 \quad \text{if} \quad i = j \\ &= 0 \quad \text{if} \quad i \neq j \end{aligned} \tag{1.51}$$

has been introduced. It may be noticed that

$$RR^T = I \tag{1.52}$$

where R^T indicates the transpose of R and I indicates the 3n x 3n unit matrix.

Multiplying Equation (1.47) by R and noting Equation (1.52) results in

$$(R^2CR^T)\,(R)(^2D) = -\,(R)(^2G_g) \tag{1.53}$$

where,

$$(R)({}^2D) = \begin{bmatrix} ({}^2u^1)^c_m \\ ({}^2v^1)^s_m \\ ({}^2w^1)^s_m \\ ({}^2u^2)^c_m \\ ({}^2v^2)^s_m \\ ({}^2w^2)^s_m \\ \vdots \\ ({}^2u^n)^c_m \\ ({}^2v^n)^s_m \\ ({}^2w^n)^s_m \end{bmatrix} = X \quad (R)({}^2G_E) = \begin{bmatrix} ({}^2P^1)^c_m \\ ({}^2Q^1)^s_m \\ ({}^2R^1)^s_m \\ ({}^2P^2)^c_m \\ ({}^2Q^2)^s_m \\ ({}^2R^2)^s_m \\ \\ ({}^2P^n)^c_m \\ ({}^2Q^n)^s_m \\ ({}^2R^n)^s_m \end{bmatrix} = Y \tag{1.54}$$

the new stiffness matrix

$$K = (R)({}^2C)(R)^T \tag{1.55}$$

now has all non-zero elements clustered around the main diagonal. The system of equations expressed in the form given in Equation (1.53) is solved rather than the form given in Equation (1.47).

Expanding the matrix Equation (1.53), the resulting system of equations may be represented by the following partitioned form:

$$\begin{aligned} K_{11}X_1 + K_{12}X_2 + \qquad\qquad\qquad\qquad\qquad\qquad &= Y_1 \\ K_{21}X_1 + K_{22}X_2 + K_{23}X_3 \qquad\qquad\qquad\qquad &= Y_2 \\ K_{32}X_2 + K_{33}X_3 + K_{34}X_4 \qquad\qquad\qquad &= Y_3 \\ \vdots \qquad\qquad\qquad\qquad\qquad\qquad\qquad\qquad\qquad\qquad & \\ K_{(e+1)e}X_e + K_{ee}X_{(e+1)} + K_{e(e+1)}X_{(e+2)} \qquad &= Y_{(e+1)} \\ K_{(e+2)(e+1)}X_{(e+1)} + K_{(e+2)(e+2)}X_{(e+2)} &= Y_{(e+1)} \end{aligned} \tag{1.56}$$

In Equation (1.56), K_{ij}, X_i, Y_j represent submatrices obtained by partitioning the K, X, Y matrices according to

$$K = \begin{bmatrix} K_{11} & K_{12} & \cdot & \cdots & \cdot & \cdot & \cdot \\ K_{21} & K_{22} & K_{23} & \cdots & \cdot & \cdot & \cdot \\ \cdot & K_{32} & K_{33} & K_{34} & & & \\ \vdots & \vdots & \vdots & \vdots & K_{(p+1)e} & K_{(p+1)(p+1)} & K_{(p+1)(p+2)} \\ \cdot & \cdot & \cdot & \cdots & \cdot & K_{(p+2)(p+1)} & K_{(p+2)(p+2)} \end{bmatrix} \tag{1.57}$$

$$X = \begin{bmatrix} X_1 \\ X_2 \\ \vdots \\ X_{p+2} \end{bmatrix} \qquad Y = \begin{bmatrix} Y_1 \\ Y_2 \\ \vdots \\ Y_{p+2} \end{bmatrix}$$

In Equations (1.56) and (1.57), p is given by

$$p = \frac{n}{4} - 1 \tag{1.58}$$

and the submatrices have dimensions as indicated in Table 2.

Table 2

Matrix	Dimension
K_{11}	6 x 6
K_{ii} $(i = 2,3,..p+1)$	12 x 12
$K_{(p+2)(p+2)}$	6 x 6
K_{12}	6 x 12
K_{21}	12 x 6
$K_{i(i+1)}$ $(i = 2,3,..,p)$	12 x 12
$K_{(i+1)i}$ $(i = 2,3,...,p)$	12 x 12
$K_{(p+1)(p+2)}$	12 x 6
$K_{(p+2)(p+1)}$	6 x 12
X_1	1 x 6
X_i $(i = 2,\cdots, p+1)$	1 x 12
X_{p+2}	1 x 6
Y_1	1 x 6
Y_i $(i = 2,\cdots, p+1)$	1 x 12
Y_{p+2}	1 x 6

The system of equations expressed in the form indicated by (1.56) may be solved as follows: From the first we obtain

$$X_1 = K_{11}^{-1} \left[Y_1 - K_{12} X_2\right]$$

Using this in the second we can obtain

$$X_2 = (K_{22} - K_{21} K_{11}^{-1} K_{12})^{-1} (Y_2 - K_{21} K_{11}^{-1} Y_1 - K_{23} X_3).$$

This is then used in the third to obtain an expression for X_3 in terms of X_4 which is then used in the fourth to obtain X_4 in terms of X_5 etc. Proceeding in this manner we arrive at the $(p + 2)^{nd}$ equation expressed only in terms of X_{p+2} which may be solved. Once X_{p+2} has been so determined X_{p+1} then X_p then X_{p-1} . . . X_1 may all be obtained by back substitution. Thus, the solution may be expressed by the following set of equations:

$$\begin{aligned} X_{(p+2)} &= B_{(p+2)(p+2)} Z_{(p+2)} \\ X_{(p+1)} &= B_{(p+1)(p+1)} \left[Z_{(p+1)} - K_{(p+1)(p+2)} X_{(p+2)}\right] \\ X_p &= B_{pp} \left[Z_p - K_{p(p+1)} X_p\right] \\ X_1 &= B_{11} \left[Z_1 - K_{12} X_2\right] \end{aligned} \tag{1.59}$$

where

$$\begin{aligned} B_{11} &= K_{11}^{-1} \\ B_{22} &= \left(K_{22} - K_{21} B_{11} K_{12}\right)^{-1} \\ B_{33} &= \left(K_{33} - K_{32} B_{22} A_{23}\right)^{-1} \\ &\vdots \\ B_{(p+2)(p+2)} &= \left(K_{(p+2)(p+2)} - K_{(p+2)(p+1)} B_{(p+1)(p+1)} K_{(p+1)(p+2)}\right)^{-1} \end{aligned} \tag{1.60}$$

and

$$\begin{aligned} Z_1 &= Y_1 \\ Z_2 &= Y_2 - K_{21} B_{11} Z_1 \\ Z_3 &= Y_3 - K_{32} B_{22} Z_2 \\ &\vdots \\ Z_{(p+2)} &= Y_{(p+2)} - K_{(p+2)(p+1)} B_{(p+1)(p+1)} Z_{(p+1)} \end{aligned} \tag{1.61}$$

It is important to note that the solution as expressed by Equations (1.59) through (1.61) only requires the inversion of a 12 x 12

matrix and is independent of the number of joints in the structure to be analyzed. It might also be noted that the programming of the solution as represented here is a relatively simple task and that a program can be easily written for a general value for n.

I. Synthesis of the Final Solution

Based on the explanations given in Sections F and G, the synthesis of the final solution for the stress distribution in the panel is now summarized. The set of 3n equations, essentially given by Equation (1.49), are solved a finite number of times for the coefficients of the transformed displacement components, denoted in Equation (1.31) by ^2D. This finite number of solutions of Equation (1.49) will depend on the characteristics of the lateral loading. However, for the types of flight loadings usually encountered, the number of terms in the series (or coefficients of the transform of displacements) represented by Equations (1.14) and (1.15) will be probably less than five. Once the displacement coefficients are determined then the internal forces can be obtained by using Equation (1.41). Finally the actual joint displacements and stress distribution in the panel are obtained by summing the finite number of terms in the series of the form given in Equations (1.14) and (1.15) and in accordance with the scheme of Table 1.

J. Remarks

The method of analysis developed in this chapter has been based on the assumption of linear elasticity and isotropy. However, it is

possible to extend the technique to include orthotropic materials by deriving the force-displacement relationships similar to those given in Equations (1.6) through (1.9) and discussed in detail in Appendix 1.

The development of the analysis algorithm in this chapter was based on a truss-core panel. However, the results are presented in the form of matrix formulas which are completely general. Hence any change in core geometry (e.g., web core) is reflected only in those matrices which define the geometry of articulation, such as Equations (1.32), (1.33), and (1.36).

Although, beyond the scope of this work, it appears advisable to investigate the stress distributions in corrugated core panels under lateral loads by utilizing a computer program.

It is recommended that several simple lateral distributions, for example uniform or triangular, be considered to obtain the stress distributions π, ρ, σ, τ in various elements of the panel. By systematically investigating the stress distributions as various parameters are varied, such as thicknesses, aspect ratios, different materials for faces and core, it appears feasible that empirical expressions could be formulated so that it would not be necessary to resort to the more time consuming matrix analysis. Further, once such closed form expressions for stresses are available the method of structural optimization used in Reference 1 can be applied.

CHAPTER 2

OPTIMUM DESIGN OF TRUSS-CORE SANDWICH PANELS

2.1 Introduction

The first step in the development of any optimum design procedure is to precisely define what is to be meant by optimum and then to translate this definition into a mathematical language. There are several different ways in which this can be accomplished and two of these are discussed here.

One common method of defining optimization is first to define some function or functional of the design parameters and to equate optimization of design with either the maximization or the minimization of this function or functional. Two frequently used choices for the function to be extremized are the total cost of the structure and the total weight of the structure. It is important to emphasize that the design which is optimum from a total cost point of view is not necessarily optimum from a total weight point of view and vice-versa. It would only be known, a priori , that both criteria would lead to the same design if it is known that the only factor that went into the total cost is the weight. Nevertheless, the tendency quite often is to choose the minimum weight criterion when the desire is actually to minimize cost since it is usually much easier to express the functional dependence of weight on the design parameters than it is to express the functional dependence of cost on the design parameters. In this work, the weight factor alone is considered and all other factors are ignored. A modified version of such an approach would be to investigate the minimum weight design and determine if there are any excessive costs associated with it (i.e. possibly high fabrication

costs). If none appear, then minimum weight is classified as optimum, but if excessive costs are uncovered then the structure is modified to remove the excessive cost problem and a somewhat higher weight structure is classified as minimum.

An optimization procedure as outlined above leads to a mathematical problem which falls within the class of problems termed extremum problems. The approaches for obtaining their solutions fall into two distinct classifications, one is termed the direct approach and the other is termed the indirect approach. The direct approach consists of simply evaluating the function to be extremized for all possible combinations of the design parameters and then comparing the results to see which is the desired extremum. It is apparent that such an approach can easily become intractable as the number of design parameters increase or the spectrum width of values is broadened. On the other hand, it is often possible to generate a scheme to "zero in" on the optimum value even for large numbers of design parameters.

The indirect approach is to develop some easily investigated requirements that a particular design must satisfy if it is to extremize the desired function and to throw out all designs that do not live up to these requirements. The designs that satisfy these requirements are then subjected to the direct approach. As an example, it is possible to show, subject to certain continuity requirements, that if the function of the design parameters is to take on an extreme value for a particular design then any small change in the design will produce no change in the function. This fact can be translated into mathematical language and the result used as a test. Although the indirect approach is frequently much faster

than the direct approach it is not without its problems since "easily investigated requirements" are frequently not easily investigated and sometimes no design will pass the postulated requirements which, of course, does not mean there is no optimum design but rather that the requirements are too severe.

As a rule the indirect approach will work quite well if the design parameters are not limited in any way or if the restrictions to be placed on the design parameters are expressible by equations. Difficulties arise when the restrictions are presented in expressions containing inequalities. For the design of a structure, these latter restrictions usually occur since the constraints that are to be placed on the parameters are simply that the structure will not fail in any manner (i.e. any structure is acceptable that does not fail).

A second approach to the entire problem of optimum design of structures is based on the physical definition of an optimally designed structure as one which is made to use all of its load carrying ability to the greatest extent possible. Starting with this definition of optimum, the procedure is to enumerate the various possible modes of failure and then choose the design parameters such that as many modes as possible are brought to incipient failure. If the condition of failure for each of the modes results in a system of linear algebraic equations on the design parameters and if all of the algebraic equations so obtained are linearly independent then a solution is assured since as many modes, as there are design parameters, can be brought to incipient failure. If the condition of failure for each of the modes results in a non-linear equation then we do not have such an assurance and we must

test to see if it is possible. See Reference 1. Several recent investigations in non-linear structural problems (3, 4) indicate that solutions do converge to distinct and real values of the parameters involved and thus unique solutions do result.

It is possible to compare this second approach of optimization to the first approach in the following manner.

Assume that minimum weight is the optimization criterion in the first approach. Mathematically,then, the problem is to choose the design parameters such that the weight function is a minimum when the design parameters are so chosen that the structure does not fail. As previously stated, the restriction that the structure should not fail is expressed mathematically as a series of inequalities, one arising from each of the various possible failure modes. Physical reasoning is now introduced and it is postulated that the minimum weight structure is probably one for which as many as possible of these inequalities is just satisfied. The object, therefore, is to choose the inequalities that are closest to being violated (i.e. as many as possible) and design so that all are just at the point of being violated. It is, of course, necessary to check that all of the remaining inequalities are still satisfied.

Although the latter approach is based more on physical reasoning than is the former, it is undoubtedly the easier approach to formulate provided the various conditions of incipient failure are expressible in closed form. Thus, it is a superior approach from an engineering point of view. For cases in which the conditions of incipient failure are not expressible in closed form it appears that the second approach can only be solved by a trial and error procedure. The difficulties, therefore,

appear to be the same as those which would be encountered in minimizing a function by the direct method. In fact, it appears that there would be more difficulties since it is necessary to satisfy more conditions by trial and error.

B. Design Parameters

Consider the truss-core sandwich plate shown in Figure 5. It is desired to optimize the design of this structure for the transverse loading of $q(x, y)$.

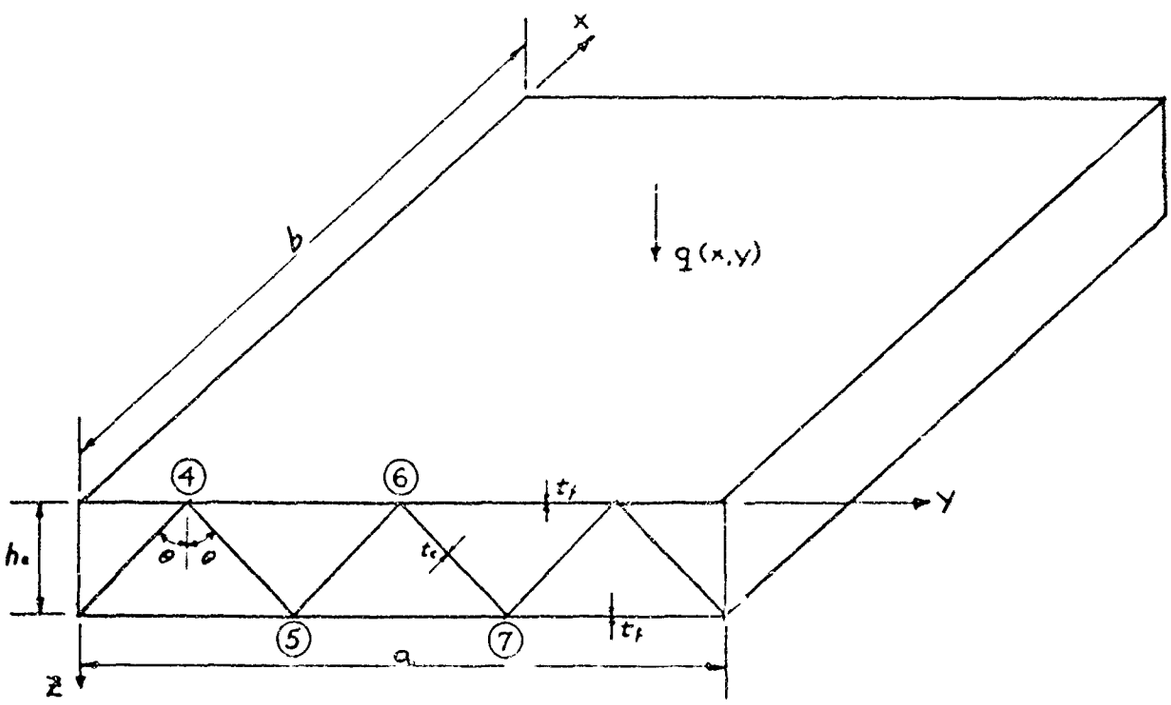

Figure 5

Truss-Core Sandwich Panel

The geometry of the structure is defined by the following dimensions:

a) "a" and "b" are the overall dimensions,

b) h_c is the thickness of the core,

c) t_f and t_c are the thickness of the face plates and the truss-core, respectively,

d) θ is the angle made by the core elements with the vertical.

In a large number of problems, the specifications will call for a design in which the overall dimensions, "a" and "b", have been predetermined. Hence, it is not proper to treat "a" and "b" as design parameters.

Although the structure is shown with all other dimensions independent of location in the plate, this need not be the case. If the manner in which the transverse loading varies with position can be limited, as well as the type of supports that will be admitted for the plate boundaries, then the manner in which the interior stress field varies will also be limited. In such cases it is possible to introduce smaller or lighter members in those regions in which the level of stress is low compared to the same type members which are in regions of higher stress levels. For this work, all core members are assumed to be identical; all face plate members are assumed to be identical; and h_c and θ are assumed to be constant with respect to any position in the plate.

In this investigation, it is assumed that the material used is homogeneous, isotropic and linearly elastic. However, the facing material and the truss-core material is taken to be different materials.

The mechanical behavior of an isotropic linearly elastic solid is governed by two constants and hence two material design parameters are introduced, in addition to the four geometric design parameters h_c, t_f, t_c, and θ. Note that for panels of different materials for facing and core, it is only necessary to specify the known ratio of the material properties and not two additional parameters.

It might be well to emphasize the fact that any optimum design procedure must, undoubtedly, include orthotropic material, limited plastic action and variation of some of the geometric parameters with position. In this light, the present work is to be viewed as a first step.

C. Failure Criteria

The first requirement of a design is that it does not fail on the basis of the following criteria:

a) excessive deflection

b) strength deficiencies

c) instability

Except in those cases for which there are very strict allowable deflection tolerances, an excessive deflection failure will usually be associated with some amount of "plastic" action occurring somewhere in the structure. To design for an excessive deflection failure, therefore, requires analysis of the structure in those cases in which part of the structure is undergoing plastic action. Since the latter problem is a formidable one, a much more restrictive criterion, completely disallowing any plastic action or allowing only some arbitrarily set limit

of plastic action, is frequently substituted for the excessive deflection criterion.

A material failure may be said to occur when the internal forces exceed the strength or a specified stress level of the material. Once again the material will usually not fail without first undergoing some plastic action. In a statically indeterminate structure like the truss core sandwich plate the onset of plastic action will result in a redistribution of internal forces which will change the stress distribution. Once again, the calculation of this redistribution is extremely complicated with the result being valid only for the specific loading history used in the analysis.

Two other material failures which can arise but are difficult to quantify or express analytically are due to creep and fatigue. However, these failures are beyond the scope of this work.

An instability failure occurs for a given loading if the distribution of internal forces calculated for that loading will undergo a significant change when a small external perturbing factor is introduced. For the truss core sandwich panel, it is possible to distinguish between a local instability which arises due to an instability in the response of an individual component and an overall instability which arises because the manner in which the components are joined causes the articulated structure to become unstable. It might be pointed out that for a statically indeterminant structure a local instability does not necessarily mean a catastrophic structural failure but may merely result in a redistribution of internal forces.

For the truss core sandwich panel subjected to a transverse loading, there is no possibility of an overall instability failure.

There is, of course, a possibility of a local instability occurring and for the geometry of the truss core treated here, such instabilities will be catastrophic.

One type of failure that sometimes occurs but is not considered in this treatment is a failure of the joints of the structural components. In fact there is much experimental evidence which indicates that improperly designed joints initiate the failure of a structure, however, a detailed consideration of this problem is beyond the scope of this work.

For the truss core sandwich panel the structure will be said to have failed; (a) if the state of stress anywhere in the structure is beyond the linear range or (b) if elastic instability occurs in any individual component. Thus the failure modes are consistent with the analyses developed in Chapter 1.

D. Failure Modes

Since the analysis presented in Chapter 1 has been developed for linear elasticity only, the expressions for describing failure modes will have to be consistent with that development. Further, the basic premise in the development of the load-displacement relationships for the plate elements of the panel has been the one-dimensional characterization (see Appendix 1). Consistent with this approach, then, it is reasonable to define failure modes in terms of the average stresses π, ρ, σ, τ for the plate elements.

Due to the nature of the loading, that is, laterally applied to the truss core panel, and simply supported edges it is obvious that the important elements to consider and their primary stresses are (see Figure 5): (1) upper face elements such as (4-6) subjected to biaxial

compression; (2) lower face elements such as (5-7) subjected to biaxial tension; and (3) web elements such as (4-5) subjected to combined stresses of compression, shear and in-plane flexure. Since in any practical case it is not always obvious what the degree of fixity is at the edges of the panel, it is conservative to use simply supported edges. Now the specific criteria for these elements will be listed and as such represent the constraints which are imposed on the structure and which must not be violated when determining a minimum weight design.

The upper face elements are subjected to essentially biaxial compression as shown in Figure 6, which can be evaluated as

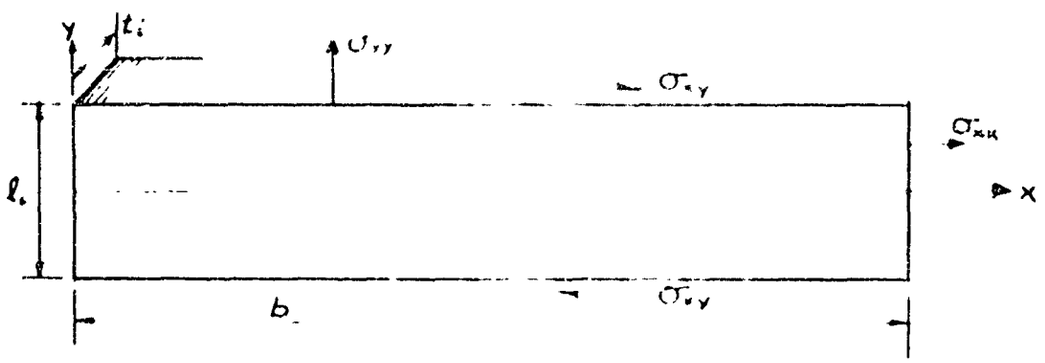

note. $i = f$ or c

Figure 6

Stresses on Typical Element

$$\sigma_{YY} = -\frac{1}{2}\frac{\tau}{t_f} \tag{2.1}$$

$$\sigma_{xx} = -\frac{1}{2}\frac{\pi}{t_f} \tag{2.2}$$

However, it can be shown that since $b >> \ell_f$, the stability of this element can be reduced to a one dimensional problem. Hence, the buckling criterion is

$$\sigma_{xx}\Big|_{cr} = -\frac{P_i^2 E_f}{3(1-\nu_f^2)}\left(\frac{t_f}{\ell_f}\right)^2 \tag{2.3}$$

so that the constraint introduced for the stresses in the upper face is

$$\Pi \leq \frac{2}{3}\frac{P_i^2 E_f t_f}{(1-\nu_f^2)}\left(\frac{t_f}{\ell_f}\right)^2 \tag{2.4}$$

The lower face elements are subjected essentially to biaxial tension (Figure 6) which can be evaluated as

$$\sigma_{yy} = \frac{1}{2}\frac{\Pi}{t_f} \tag{2.5}$$

$$\sigma_{xx} = \frac{1}{2}\frac{\Pi}{t_f} \tag{2.6}$$

In this combined stress situation it is usual to resort some theory of failure depending on the type of material used. For example, if the material is ductile a widely accepted theory is Maximum Shear which interprets failure as occuring at first yielding of the ductile material; if the material is brittle then many times the Maximum Stress Theory is used. Thus the constraint introduced for the stresses in the lower face is simply that the larger principal tensile stress is less than or equal to the fracture stress in a uniaxial tensile test of the material.

The web element is essentially subjected to a combination of stresses resulting from σ_{xx}, σ_{yy} and σ_{xy} as shown in Figure 6. In terms of the average stresses

$$\sigma_{xx} = \frac{4G}{1-\nu_c}\frac{d\beta(x)}{dx}\frac{y}{\ell_c} \tag{2.7}$$

$$\sigma_{YY} = -\frac{1}{2}\frac{\tau}{t_c} \tag{2.8}$$

$$\sigma_{xy} = \frac{1}{2}\frac{\rho}{t_c} \tag{2.9}$$

Equation (2.7) is the σ_{xx} stress developed as a consequence of the σ stresses and is given in Appendix 1 by Equation (A.7a). Note that since the analysis given in Chapter 1 evaluates $\beta(x)$ by a truncated series then $\frac{d\beta}{dx}$ can be found by termwise differentiation. Although no rigorous theory exists to account for buckling of a long thin plate under combined loading, Reference 5 recommends a criterion of the following type:

$$R_1^x + R_2^y + R_3^x \leq 1 \tag{2.10}$$

where

$$R = \frac{\sigma_{ij}}{F} = \frac{\text{applied stress}}{\text{allowable stress}}$$

1,2,3 index which indicates the type of loading, e.g., compression(c), shear(s), or flexure(b)

x,y,z numerical exponents.

In particular, Reference 6 in Figure 27 presents interaction curves for various combinations of compression, bending and shear. Thus, a criterion given by Equation (2.10) or data from interaction curves the third constraint is introduced which cannot be violated during the optimization process.

E. Optimization Procedure

Based on the form of analysis developed in Chapter 1, it is readily apparent that for the truss core sandwich panel under lateral loads

optimization by extremization of a functional form is impractical but rather a numerical procedure will have to be utilized. Consequently, optimum design will not be defined as that one in which the most obvious failure modes occur simultaneously. Instead, the criterion used will be to choose those values of the design parameters which make the total weight a minimum subject to the restriction that none of the failure criteria are violated.

The recommended method of achieving an optimum design will be the direct approach as described in Section A. Since no analytical expressions exist at this time which predict the stress distributions for the panels considered in this report, the direct approach appears to be the most straight forward and feasible technique and in essence concurs with the philosophy promulgated by R. Bellman in Reference 7.

The two material parameters, $\frac{E_f}{E_c}$ and $\frac{\nu_f}{\nu_c}$, and the four geometrical parameters, h_c, t_c, t_f, and θ , define a six dimensional space with a one to one correspondence between a point in space and a particular design. Since every point in the space obviously will not correspond to a design which will not fail, the first step will be to ascertain the region in space which corresponds to designs which do not fail. These valid designs are numerically determined by the procedure given in the flow chart, Figure 7. Thus, the hypersurface separating the region of no failure from the region of failure is obtained. As a consequence of these calculations, the extremum regions on the weight hypersurface will be grossly defined. The next step is to

refine the geometrical parameter increments in the region of minimum panel weight until a design configuration is secured to whatever accuracy is deemed necessary.

Referring to Figure 5, the entire weight of the structure (exclusive of weight of adhesives or fasteners), expressed in terms of the design parameters, is easily seen to be

$$W = ab\left[\frac{\rho_c t_c}{\sin\theta} + 2\rho_f t_f\right] \tag{2.12}$$

where ρ_c and ρ_f are the weight densities of the core and the faces, respectively, and all other quantities are defined in Figure 5. It is immediately seen that neither h_c nor the ratio of mechanical properties enters directly into the weight, however, it would be erroneous to conclude from this that the depth does not enter into the weight. Only two of the three parameters, b, h_c, and θ can be chosen to be independent for the geometry shown and Equation (2.12) takes b and θ as the independent parameters. The ratio of the mechanical properties will also enter the picture in an indirect manner since they will have an effect on what values for the other design parameters constitute a safe design.

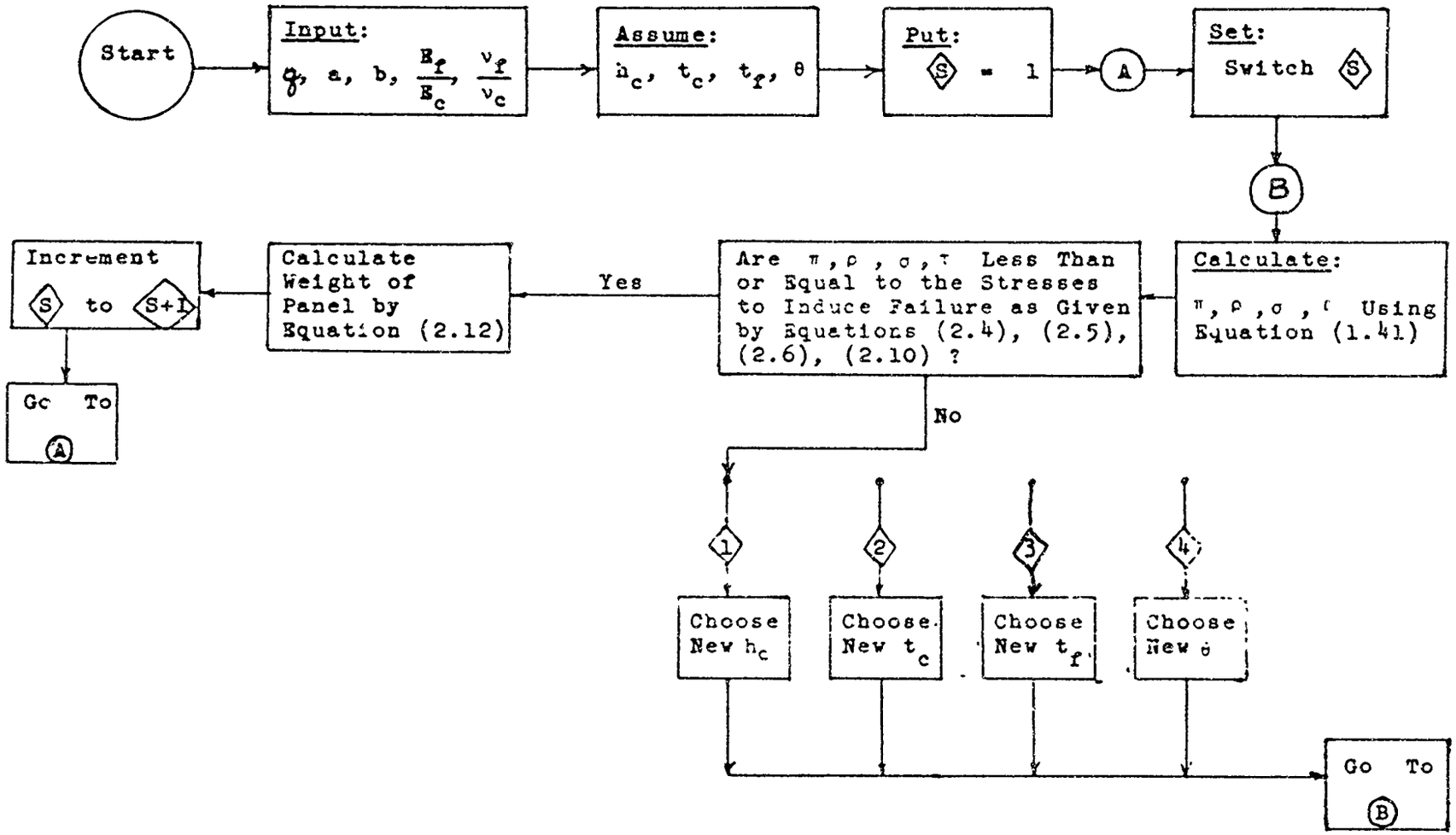
Start
Input:
q, a, b, E_f/E_c, ν_f/ν_c
Assume:
h_c, t_c, t_f, θ
Put:
S = 1
A
Set:
Switch S
B
Calculate:
π, ρ, σ, τ Using Equation (1.41)
Are π, ρ, σ, τ Less Than or Equal to the Stresses to Induce Failure as Given by Equations (2.4), (2.5), (2.6), (2.10) ?
Yes
No
Calculate Weight of Panel by Equation (2.12)
Increment S to S+1
Go To A
1
2
3
4
Choose New h_c
Choose New t_c
Choose New t_f
Choose New θ
Go To B

FIGURE 7.

REFERENCES

1. Vinson, J. R. and Shore, S., "Methods of Structural Optimization for Flat Sandwich Panels", U. S. Naval Air Engineering Center Report No. NAEC - ASL - 1083, 15 April 1965.

2. Shore, Sidney, "Matrix Analysis of Structures", A.S.C.E. Conference Papers on Electronic Computation, Pittsburgh, Pa., September 1960.

3. Shore, S. and Bathish, G., "Membrane Analogy of Cable Roofs", International Conference of Space Structures, University of Surrey, London, England, September 1966. Proceedings to be published in 1967.

4. Ahmad, J. and Shore, S., "Post-Buckling Dynamic Response of a Flat Circular Plate". Presented at Column Research Council, Lehigh University, April 1966.

5. Military Handbook 5A, "Metallic Materials and Elements for Aerospace Vehicle Structures", Department of Defense, February 8, 1966.

6. Gerard, G. and Becker, H., "Handbook of Structural Stability. I: Buckling of Flat Plates", NACA TN 3781, 1957.

7. Bellnian, Richard, "The Role of the Mathematician in Applied Mathematics", Proceedings of the Fifth U. S. National Congress of Applied Mechanics (1966). p 195-204.

APPENDIX I

GOVERNING EQUATIONS FOR ONE-DIMENSIONAL ELEMENTS

It is the purpose of this appendix to investigate the validity of postulating that the basic elements have only one significant dimension and to obtain the equations governing the response of these one dimensional models.

The restriction of the basic elements to thin plates (i.e. with respect to the other two dimensions and the rate of spatial variation of the loading) subjected to in-plane loading allows average values to be used as far as the thickness direction is concerned. The resulting two dimensional theory, generalized plane stress theory, is well understood and the requirements for its validity need not be investigated here. It is the further reduction from a two-dimensional problem to a one-dimensional problem that needs to be investigated.

Case I:

Consider the boundary value problem shown in Figure A1.

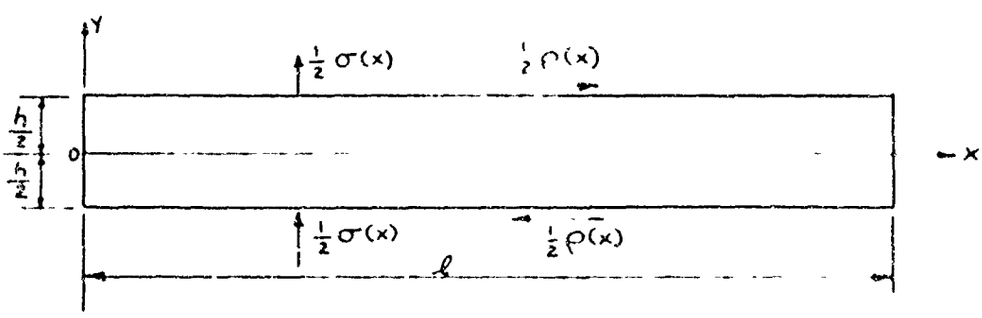

Figure A1

with the boundary conditions at x = 0 and x = 1 not being specified as yet.

The appropriate governing equations are:

Equilibrium:

$$\sigma_{xx,x} + \sigma_{xy,y} = 0$$
$$\sigma_{xy,x} + \sigma_{yy,y} = 0 \tag{A.1}$$

Stress-Strain:

$$\sigma_{xx} = \frac{2G}{1-\nu}(\epsilon_{xx} + \nu\epsilon_{yy})$$
$$\sigma_{yy} = \frac{2G}{1-\nu}(\epsilon_{yy} + \nu\epsilon_{xx}) \tag{A.2}$$
$$\sigma_{xy} = 2G\gamma_{xy}$$

Strain-Displacement:

$$\epsilon_{xx} = u_{,x}$$
$$\epsilon_{yy} = v_{,y} \tag{A.3}$$
$$\epsilon_{xy} = \frac{1}{2}(u_{,y} + v_{,x})$$

The comma notation indicates partial differentiation with respect to the variables x and y. The boundary conditions on the edges y = $\pm$ h/2 are

$$\sigma_{yy} = \pm\frac{\sigma(x)}{2t}$$
$$\sigma_{yx} = \frac{\rho(x)}{2t} \tag{A.4}$$

where the plus sign is correct for y = + h/2 and the minus sign is correct for y = - h/2.

In order to solve this system of equations it is possible to first substitute the strain-displacement relations into the stress-strain relations to obtain stress-displacement relations and then substitute the result into the equilibrium equations to obtain two coupled partial differential equations in $u(x,y)$ and $v(x,y)$. To satisfy these

equations in conjunction with the boundary conditions as listed in (A.4) is not, in general, possible. however if "h" is much less than any characteristic dimension in the x direction (i.e. either the length or some measure of the rate of variation of $\sigma(x)$ or $\rho(x)$), then an approximate solution can be achieved on the basis of the following assumption: the y variation of the unknown displacements $u(x,y)$ and $v(x,y)$ is expandable in a power series. Under the assumption of small h relative to dimensions in the x direction these power series expansions will converge quite rapidly hence a good approximation can be obtained by truncating after the first few terms. Realizing this, the truncation is introduced in the very beginning rather than obtaining first the exact solution in series form and then truncating. It is important to notice, however, that the truncated series is only approximate and as such cannot satisfy the pair of partial differential equations discussed above but rather can satisfy only certain aspects of them.

The form of the loading applied to the edges at $y = \pm h/2$ will give rise to a $u(x,y)$ which is antisymmetric in y and a $v(x,y)$ which is symmetric in y. Noting this, then if the power series expressions is truncated after one term the following form for the displacement field results

$$u(x,y) = \frac{2\beta(x)y}{h}$$
$$v(x,y) = \gamma(x) \tag{A.5}$$

where $\beta(x)$ and $\gamma(x)$ are to be determined by satisfying some aspects of the governing equation. The strain and stress fields associated with the above displacement field is obtained by direct substitution

$$\epsilon_{xx} = 2\frac{d\beta}{dx}\frac{y}{h} \tag{A.6}$$

$$\epsilon_{yy} = 0$$

$$\sigma_{xy} = \frac{1}{2}\left[\frac{2\beta(x)}{h} + \frac{d\gamma}{dx}\right]$$

$$\sigma_{xx} = \frac{4G}{1-\nu}\frac{d\beta}{dx}\frac{y}{h} \tag{A.7 a}$$

$$\sigma_{yy} = \frac{4G\nu}{1-\nu}\frac{d\beta}{dx}\frac{y}{h} \tag{A.7 b}$$

$$\sigma_{xy} = G\left(\frac{2\beta}{h} + \frac{d\gamma}{dx}\right) \tag{A.7 c}$$

As mentioned above, substitution of Equations (A.7) into the equations of equilibrium will show that they will not be satisfied no matter what the form of $\beta(x)$ or $\gamma(x)$. However, some aspects of them can be satisfied. Integrating the equations with respect to y from - h/2 to h/2, and making use of the boundary conditions expressed in (A.4) results in

$$\frac{d}{dx}\int_{-\frac{h}{2}}^{\frac{h}{2}} \sigma_{xx}\, dy = 0 \tag{A.8 a}$$

$$\frac{d}{dx}\int_{-\frac{h}{2}}^{\frac{h}{2}} \sigma_{xy}\, dy + \frac{\sigma(x)}{t} = 0 \tag{A.8 b}$$

It is obvious that Equation (A.8 a) will be satisfied regardless of the form of $u(x)$ and $v(x)$ whereas Equation (A.8 b) introduces the following restriction which is obtained by substitution of Equation (A.7 c) into Equation (A.8 b) and performing the indicated integration

$$\sigma(x) = -Ght\left(\frac{2}{h}\frac{d\beta}{dx} + \frac{d^2\gamma}{dx^2}\right) \tag{A.9}$$

In addition to satisfying the equilibrium equations in an average sense, the requirement that stress couple equals zero can also be satisfied. Multiplying each of Equation (A.1) by y and then integrating, again making use of Equation (A.4) the results are:

$$\frac{d}{dx}\int_{-\frac{h}{2}}^{\frac{h}{2}} y\sigma_{xx}\,dy + \frac{h\rho(x)}{2t} - \int_{-\frac{h}{2}}^{\frac{h}{2}} \sigma_{xy}\,dy = 0 \qquad \text{(A.10 a)}$$

$$\frac{d}{dx}\int_{-\frac{h}{2}}^{\frac{h}{2}} y\sigma_{xy}\,dy - \int_{-\frac{h}{2}}^{\frac{h}{2}} \sigma_{yy}\,dy = 0 \qquad \text{(A.10 b)}$$

By direct substitution of Equation (A.7) into Equation (A.10), it is readily seen that Equation (A.10 b) is identically satisfied while Equation (A.10 a) introduces the following restriction on $\beta(x)$ and $\gamma(x)$:

$$\rho(x) = 2Gt\left[\frac{2\beta}{h} - \frac{h}{3(1-\nu)}\frac{d^2\beta}{dx^2} + \frac{d\gamma}{dx}\right] \qquad \text{(A.11)}$$

Equations (A.9) and (A.11) give the desired relations between the loading and the displacement field subject to the restrictions already noted. A more rigorous analysis using energy concepts would show that it is logically consistent to introduce a shape factor (termed K^2) into Equation (A.7 c). That is,

$$\sigma_{xy} = K^2 G\left(2\frac{\beta}{h} + \frac{d\gamma}{dx}\right) \qquad \text{(A.7 d)}$$

Introducing this factor permits Equations (A.7 d) and (A.11) to be written as

$$\sigma(x) = -2K^2Gt\frac{d\beta(x)}{dx} - K^2Ght\frac{d^2\gamma(x)}{dx^2}$$

$$\rho(x) = \left[\frac{4K^2Gt}{h} - \frac{2Ght}{3(1-\nu)}\frac{d^2}{dx^2}\right]\beta(x) + 2K^2Gt\frac{d\gamma(x)}{dx} \tag{A.12}$$

A word should be said about the boundary conditions to be applied to the ends $x = 0$ and $x = \ell$. Obviously, it is not possible to satisfy the exact boundary conditions of the three dimensional theory but only satisfy these boundary conditions in an average sense. By virtue of St. Venant's principle, however, it is known that the error associated with not satisfying these conditions exactly is confined to the region in the vicinity of the two ends.

Case II: Next, consider the boundary value problem shown in Figure A2,

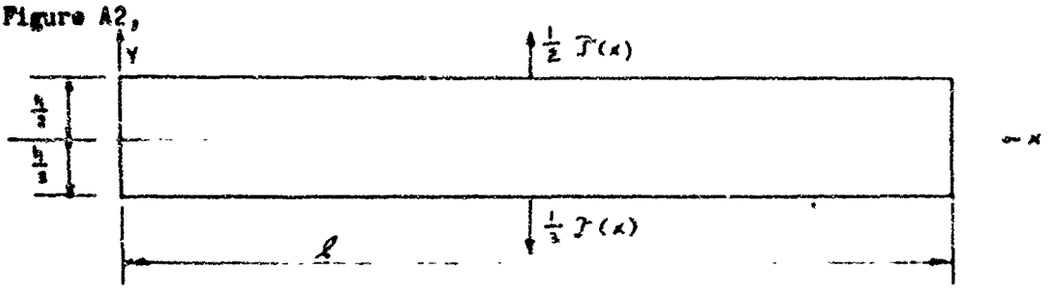

Figure A2

with the boundary conditions at $x = 0$ and $x = \ell$ being left unspecified for the time being.

The governing equations are again (A.1) through (A.3) with the boundary conditions on $y = \pm h/2$ being expressed mathematically as

$$\sigma_{yy} = \frac{\mathcal{T}(x)}{2t}$$

$$\sigma_{yx} = 0 \tag{A.13}$$

A solution of the following form is taken

$$u(x,y) = u'(x,y)$$

$$v(x,y) = v_0(x)y + v'(x,y) \tag{A.14}$$

where it has been assumed that

$$v_0(x) = \frac{(1-\nu)\mathcal{T}(x)}{4Gt} \tag{A.15}$$

By substituting this form of the solution in Equations (A.1) through (A.3) and (A.13) results in the following boundary value problem on $u'(x,y)$ and $v'(x,y)$.

Equilibrium:

$$\sigma'_{xx,x} + \sigma'_{xy,y} = -\frac{2G}{1-\nu}\frac{dv_0(x)}{dx}$$

$$\sigma'_{xy,x} + \sigma'_{yy,y} = -\frac{2G(1+\nu)}{(1-\nu)}\frac{d^2v_0(x)y}{dx^2} \tag{A.16}$$

Stress-Strain:

$$\sigma'_{xx} = \frac{2G}{1-\nu}(\epsilon'_{xx} + \nu\epsilon'_{yy})$$

$$\sigma'_{yy} = \frac{2G}{1-\nu}(\epsilon'_{yy} + \nu\epsilon'_{xx}) \tag{A.17}$$

$$\sigma'_{xy} = 2G\,\gamma'_{xy}$$

Strain-Displacement:

$$\epsilon'_{xx} = u'_{,x}$$

$$\epsilon'_{yy} = v'_{,y} \tag{A.18}$$

$$\gamma'_{xy} = \frac{1}{2}(u'_{,y} + v'_{,x})$$

Boundary Conditions on $y = \pm h/2$:

$$\sigma'_{yy} = 0$$

$$\sigma'_{xy} = \mp 2Gh\frac{dv_0(x)}{dx} \tag{A.19}$$

where the minus sign is correct for $y = + h/2$ and the plus sign is correct for $y = - h/2$.

Now, without actually solving the boundary value problem for $u'(x,y)$ and $v'(x,y)$, it is desirable to obtain some knowledge of the order of magnitude of these terms relative to $v_0(x)y$.
To do this properly all dimensions are first normalized with respect to some characteristic length, say h.

Let
$$\xi = \frac{x}{h}$$
$$\eta = \frac{y}{h} \tag{A.20}$$

In terms of ξ and η as the independent variables the boundary value problem on $u'(\xi,\eta)$ and $v'(\xi,\eta)$ becomes

Equilibrium:

$$\sigma_{xx}'',_{\xi} + \sigma_{xy}'',_{\eta} = -\frac{2G}{1-\nu}\frac{dv_0(\xi)}{d\xi} \tag{A.21}$$
$$\sigma_{xy}'',_{\xi} + \sigma_{yy}'',_{\eta} = -\frac{2G(1+\nu)}{1-\nu}\frac{d^2v_0(\xi)}{d\xi^2}\eta$$

Stress-Strain:

$$\sigma_{xx}'' = \frac{2G}{1-\nu}(\epsilon_{xx}'' + \nu\epsilon_{yy}'')$$
$$\sigma_{yy}'' = \frac{2G}{1-\nu}(\epsilon_{yy}'' + \nu\epsilon_{xx}'') \tag{A.22}$$
$$\sigma_{xy}'' = 2G\gamma_{xy}''$$

Strain Displacement:

$$\epsilon_{xx}'' = \frac{1}{h}u'',_{\xi}$$
$$\epsilon_{yy}'' = \frac{1}{h}v'',_{\eta} \tag{A.23}$$
$$\gamma_{xy} = \frac{1}{h}(u'',_{\eta} + v'',_{\xi})$$

Boundary Conditions:

$$\sigma_{yy}'' = 0$$
$$\sigma_{xy}'' = \mp 2G\frac{dv_0(\xi)}{d\xi} \tag{A.24}$$

In Equations (A.20) through (A.24), the double prime has been introduced to emphasize the fact that the independent variables have been changed.

It can be shown that all of the forcing terms on $[u''(\xi,\eta)/h]$ and $[v''(\xi,\eta)/h]$ are dependent on derivates of $v_0(\xi)$ with respect to ξ. Since this is true and since the first portion of the solution is equal to $v_0(\xi)h\eta$ it is consistent to neglect the second portion relative to the first provided

$$\left|\frac{dv_0/d\xi}{v_0(\xi)}\right| << 1$$

The result of doing this is to obtain as a solution the following

$$u(x,y) = 0$$
$$v(x,y) = \frac{(1-\nu)\tau(x)}{4Gt}\,y \qquad \text{(A.25)}$$

which is used in Chapter 1.

Nothing was said of the boundary conditions applied at $x = 0$ and $x = \ell$. Once again under the assumption of $h << \ell$, the effect of the boundary will be small except near the extremities of the member.

<u>Case III</u>: The final case is the boundary value problem as shown in Figure A3.

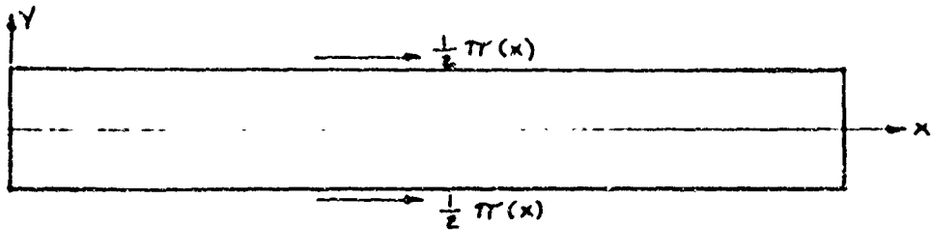

Figure A3

with the conditions at $x = 0$ and $x = 1$ left unspecified for the moment.

As before it can be shown that if $h << \ell$ and much less than any rate of spatial variation of $\pi(x)$ then it is justifiable to deal with an average value relative to the y direction. Such an attack will result in the number being treated as one dimensional. The solution is

$$\pi(x) = \frac{2Ght}{1+\nu} \frac{d^2 u_0(x)}{dx^2} \tag{A.26}$$

Security Classification

DOCUMENT CONTROL DATA - R&D

(Security classification of title, body of abstract and indexing annotation must be entered when the overall report is classified)

1 ORIGINATING ACTIVITY (Corporate author)
Struct ral Mechanics Associates
1433 Sandy Circle
Narberth, Pennsylvania

2a REPORT SECURITY CLASSIFICATION
None

2b GROUP

3 REPORT TITLE
A METHOD FOR WEIGHT OPTIMIZATION OF FLAT TRUSS-CORE SANDWICH PANELS UNDER LATERAL LOADS

4 DESCRIPTIVE NOTES (Type of report and inclusive dates)
Final report (24 May 1965 to 31 December 1966)

5 AUTHOR(S) (Last name, first name, initial)
McCoy, John J.
Shore, Sidney
Vinson, Jack R.

6 REPORT DATE	7a TOTAL NO OF PAGES	7b NO OF REFS
1 June 1967	70	7

8a CONTRACT OR GRANT NO	9a ORIGINATOR'S REPORT NUMBER(S)
N156-46654	NAEC-ASL-1111
b PROJECT NO W.U. 530/07 (P.A. 1-23-96)	9b OTHER REPORT NO(S) (Any other numbers that may be assigned this report)
c	
d	

10 AVAILABILITY/LIMITATION NOTICES
DISTRIBUTION OF THIS DOCUMENT IS UNLIMITED.

11 SUPPLEMENTARY NOTES

12 SPONSORING MILITARY ACTIVITY
Naval Air Engineering Center
Aeronautical Structures Laboratory
Philadelphia, Pa. 19112

13 ABSTRACT

A method is presented for optimizing, on a weight basis, flat truss-core sandwich panels under lateral loads. To solve this type of problem by equating the stress level for all failure modes requires a knowledge of the stress distribution throughout the panel for the given loading. There are no available stress analysis methods of sufficient sophistication for corrugated panels under lateral loading; hence, a large portion of this report is devoted to the development of such a method of analysis. The method is essentially a deformation method; however, a technique of using Fourier type transformations makes the solution more tractable.

DD FORM 1 JAN 64 1473 D23558 UNCLASSIFIED

UNCLASSIFIED
Security Classification

14. KEY WORDS	LINK A ROLE	LINK A WT	LINK B ROLE	LINK B WT	LINK C ROLE	LINK C WT
Optimization						
Truss-Core Analysis						
Corrugated Core Analysis						
Sandwich Panels						
Buckling						

INSTRUCTIONS

1. ORIGINATING ACTIVITY: Enter the name and address of the contractor, subcontractor, grantee, Department of Defense activity or other organization *(corporate author)* issuing the report.

2a. REPORT SECURITY CLASSIFICATION: Enter the overall security classification of the report. Indicate whether "Restricted Data" is included. Marking is to be in accordance with appropriate security regulations.

2b. GROUP: Automatic downgrading is specified in DoD Directive 5200.10 and Armed Forces Industrial Manual. Enter the group number. Also, when applicable, show that optional markings have been used for Group 3 and Group 4 as authorized.

3. REPORT TITLE: Enter the complete report title in all capital letters. Titles in all cases should be unclassified. If a meaningful title cannot be selected without classification, show title classification in all capitals in parenthesis immediately following the title.

4. DESCRIPTIVE NOTES: If appropriate, enter the type of report, e.g., interim, progress, summary, annual, or final. Give the inclusive dates when a specific reporting period is covered.

5. AUTHOR(S): Enter the name(s) of author(s) as shown on or in the report. Enter last name, first name, middle initial. If military, show rank and branch of service. The name of the principal author is an absolute minimum requirement.

6. REPORT DATE: Enter the date of the report as day, month, year; or month, year. If more than one date appears on the report, use date of publication.

7a. TOTAL NUMBER OF PAGES: The total page count should follow normal pagination procedures, i.e., enter the number of pages containing information.

7b. NUMBER OF REFERENCES: Enter the total number of references cited in the report.

8a. CONTRACT OR GRANT NUMBER: If appropriate, enter the applicable number of the contract or grant under which the report was written.

8b, 8c, & 8d. PROJECT NUMBER: Enter the appropriate military department identification, such as project number, subproject number, system numbers, task number, etc.

9a. ORIGINATOR'S REPORT NUMBER(S): Enter the official report number by which the document will be identified and controlled by the originating activity. This number must be unique to this report.

9b. OTHER REPORT NUMBER(S): If the report has been assigned any other report numbers *(either by the originator or by the sponsor)*, also enter this number(s).

10. AVAILABILITY/LIMITATION NOTICES: Enter any limitations on further dissemination of the report, other than those imposed by security classification, using standard statements such as:

(1) "Qualified requesters may obtain copies of this report from DDC."

(2) "Foreign announcement and dissemination of this report by DDC is not authorized."

(3) "U. S. Government agencies may obtain copies of this report directly from DDC. Other qualified DDC users shall request through _____."

(4) "U. S. military agencies may obtain copies of this report directly from DDC. Other qualified users shall request through _____."

(5) "All distribution of this report is controlled. Qualified DDC users shall request through _____."

If the report has been furnished to the Office of Technical Services, Department of Commerce, for sale to the public, indicate this fact and enter the price, if known.

11. SUPPLEMENTARY NOTES: Use for additional explanatory notes.

12. SPONSORING MILITARY ACTIVITY: Enter the name of the departmental project office or laboratory sponsoring *(paying for)* the research and development. Include address.

13. ABSTRACT: Enter an abstract giving a brief and factual summary of the document indicative of the report, even though it may also appear elsewhere in the body of the technical report. If additional space is required, a continuation sheet shall be attached.

It is highly desirable that the abstract of classified reports be unclassified. Each paragraph of the abstract shall end with an indication of the military security classification of the information in the paragraph, represented as *(TS), (S), (C), or (U)*.

There is no limitation on the length of the abstract. However, the suggested length is from 150 to 225 words.

14. KEY WORDS. Key words are technically meaningful terms or short phrases that characterize a report and may be used as index entries for cataloging the report. Key words must be selected so that no security classification is required. Identifiers, such as equipment model designation, trade name, military project code name, geographic location, may be used as key words but will be followed by an indication of technical context. The assignment of links, roles, and weights is optional.