AFCRL-67-0196

ASE-1572

INVESTIGATION OF THE VARIABLES CONTROLLING THE FLUX GROWTH OF HIGH QUALITY LASER CRYSTALS

AD 655388

C. M. COBB

E. B. WALLIS

CONTRACT NO. AF 19 (628)-5656

PROJECT NO. 5620

TASK NO. 562005

FINAL REPORT

Period Covered: 20 August 1965-19 August 1966

27 MARCH 1967

D D C
RECEIVED
JUL 27 1967
B

CONTRACT MONITOR: CORTLAND O. DUGGER

Distribution of this document is unlimited.

PREPARED FOR

AIR FORCE CAMBRIDGE RESEARCH LABORATORIES
OFFICE OF AEROSPACE RESEARCH
UNITED STATES AIR FORCE
BEDFORD, MASSACHUSETTS

RECEIVED
AUG 3 1967
CFSTI

RECF
AUG 3
CFSTI

AMERICAN SCIENCE AND ENGINEERING
11 Carleton Street, Cambridge, Massachusetts 02142

AS&E

DISCLAIMER NOTICE

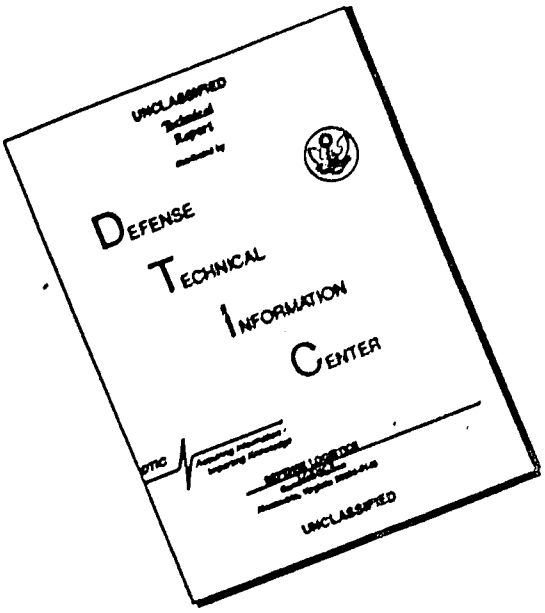

THIS DOCUMENT IS BEST QUALITY AVAILABLE. THE COPY FURNISHED TO DTIC CONTAINED A SIGNIFICANT NUMBER OF PAGES WHICH DO NOT REPRODUCE LEGIBLY.

BLANK PAGES
IN THIS
DOCUMENT
WERE NOT
FILMED

AFCRL-67-0196 ASE-1572

INVESTIGATION OF THE VARIABLES CONTROLLING THE FLUX GROWTH OF HIGH QUALITY LASER CRYSTALS

C. M. Cobb
E. B. Wallis

American Science and Engineering
11 Carleton Street
Cambridge, Massachusetts 02142

Contract No. AF 19(628)-5656
Project No. 5620
Task No. 562005

FINAL REPORT

Period Covered: 20 August 1965 through 19 August 1966

27 March 1967

Contract Monitor: Cortland O. Dugger

Distribution of this document is unlimited.

Prepared for

Air Force Cambridge Research Laboratories
Office of Aerospace Research
United States Air Force
Bedford, Massachusetts 01730

ABSTRACT

A study has been made of the solution variables, crystal constants, and system parameters which control the growth of large perfect crystals of refractory oxides from fused salt solvents. A set of formulas have been developed for the prediction of growth conditions from these fluxes. Cooling rates, thermal gradients, stirring rates, and container dimensions have been considered as system parameters. Solubilities, diffusion constants, viscosities, interfacial surface energies, solution and crystal densities, and solute radii have been considered as independent variables. The formulas have been applied to the prediction of crystal growing conditions for the production of sapphire and ruby from a lanthanum fluoride-aluminum oxide flux. The study included experimental determinations of the densities and viscosities of the lanthanum fluoride-aluminum oxide flux and experiments upon the solubility of aluminum oxide in this flux.

Results from the program indicate that past and present difficulties with the fused salt technique of crystal growth have been caused primarily by hydrodynamic factors which may be overcome by detailed planning of experimental growth conditions.

TABLE OF CONTENTS

Section			Page
I	INTRODUCTION		1
II	THEORETICAL BACKGROUND		5
	2.1	Introduction	5
	2.2	Practical Rates for the Generation of Supersaturation	10
	2.3	The Prediction of Growth Rates	13
	2.4	Nucleation	22
	2.5	Development of Thermal Convection	28
	2.6	Inclusion Formation	33
	2.7	Distribution of Dopant	35
III	EXPERIMENTAL		37
	3.1	Solubility and Supersolubility Determinations	38
	3.2	Density and Coefficient of Expansion Determinations	43
	3.3	Viscosity Determinations	46
IV	FLUX PROPERTIES		51
	4.1	Measured Properties	51
		4.1.1 Solubility	51
		4.1.2 Density and Coefficient of Thermal Expansion	53
		4.1.3 Viscosity	53
	4.2	Derived Flux Properties	53
		4.2.1 Diffusion Constant, D, and the Free Energy of Activation for Diffusion, ΔF_D	53

TABLE OF CONTENTS (Continued)

Section			Page
		4.2.2 Thermal Conductivity, k, and Thermal Diffusivity, K	57
	4.3	Summary	58
V	DISCUSSION		61
	5.1	Introduction	61
	5.2	The Generation of Supersaturation for Crystal Growth from the Lanthanum Fluoride-Aluminum Oxide Flux	63
		5.2.1 Growth of Al_2O_3 by Slow Cooling of the Flux	63
		5.2.2 Growth of Al_2O_3 from the Flux by the Thermal Gradient Method	67
	5.3	The Prevention of Solvent Inclusions	75
	5.4	Factors which Influence Crystal Perfection	79
VI	CONCLUSIONS AND RECOMMENDATIONS		83
	References		87
	Appendix A		A1 - A4
	Appendix B		B1 - B8
	Appendix C		C1 - C20
	Appendix D		D1 - D2
	Appendix E		E1 - E5

LIST OF FIGURES

Number		Page
1	Thermal Analysis Apparatus	39
2	Cooling Curve Apparatus	40
3	Quenching Apparatus	41
4	Quenching Apparatus	42
5	Fused Salt Density Apparatus	44
6	Density and Viscosity Bobs	45
7	Fused Salt Viscosity Apparatus	47
8	Calibration of Viscosimeter	49
9	DTA Plot for a 62 Mole % LaF_3 - 38 Mole % Al_2O_3	52
10	Density of Molten Mixture	54
11	Viscosity of Molten Mixture	55

I. INTRODUCTION

This is the final report on Contract No. AF 19(628)-5656. The work on this contract has been directed to solution studies on fused salt systems in order to provide information for the growth of sapphire and ruby crystals. The work included a library search of the available flux systems for the growth of sapphire, ruby, and spinel, the design and construction of equipment for measuring the variables on a representative system, and estimates of the sizes, shapes, and temperature gradients necessary for flux growth from the system. The research effort reported here has been confined to flux systems and growth procedures suggested by the AFCRL Project Officer. The flux systems were chosen from a number which had undergone preliminary evaluation in the AFCRL Crystal Physics Laboratories.

While the stated scope of the effort was confined to fused salt systems for the growth of ruby and sapphire, the basic aim of the research effort was to develop general methods for defining growth conditions for any single crystalline material grown from a fused salt solvent. Such general methods are needed to utilize the large number of new fluxes (solvents) and new crystalline materials recently discovered (Ref. 1).

Crystal grower's objections to the flux method are based on its tendency to produce small crystals having solvent inclusions. These crystals are often twinned and may be inhomogeneously doped. The program described here sought to understand the reasons for these results and to provide means for overcoming them.

The specific objectives of the study were:

1. To understand the controlling mechanisms of growth.

2. To understand and eliminate, if possible, the causes of multiple nucleation.
3. To determine the cooling rates and temperature gradients needed for the efficient generation of supersaturation.
4. To determine under what conditions free convective flow occurred in the growth apparatus.
5. To determine the conditions for crystal growth without solvent inclusions.

Although fused salt solvents have been used to grow single crystals of refractory oxides for more than a hundred years, techniques have been developed empirically and little application of crystal growth theory to the fused salt method can be found in print. Laudise summarized the current theory and techniques of crystal growth from molten salt solvents in 1963 (Ref. 2) reporting the development of theory almost exclusively in terms of the temperature dependence of solubility. The theoretical problems of absolute rates of growth, nucleation, and inclusion formation of solution grown crystals were not discussed in Laudise's review. Information concerning these theoretical problems had not been previously published.

In this report, the physical models which have been previously used to describe and understand crystal growth processes in aqueous and organic solvents are reviewed and the equations which arise from these models are stated in terms useful to crystal growth from fused salts. Finally, these equations are applied to a specific flux system.

The physical data about flux systems which are needed as inputs to the equations have been sought by recourse to the literature or by direct measurement. These include the solubility and supersolubility data for the nutrient liquid, and the properties of the fused salt which control diffusion and hydrodynamic flow, such as the viscosity, density, and the change of density with temperature. The effort required to obtain necessary data for

calculations has been extensive. In addition, solubility data have been supplied by the AFCRL Project Officer.

The report is organized about the theoretical analysis. Crystal growth theory is discussed in Section II, measurement techniques in Section III, necessary flux data in Section IV, the results of applying current theory to a specific flux system in Section V, and conclusions and recommendations in Section VI.

The quarterly progress reports for the entire period of the contract are given in the Appendix to this report.

II. THEORETICAL BACKGROUND

2.1 Introduction

Although many materials can only be produced in single crystal form by growth from fused salt solvents, crystal growers have the opinion that it is difficult to grow good, large crystals by this method. This opinion is supported by extensive evidence. The customary result of a fused salt crystal growth experiment is a large crop of small crystals, some perfect and a few medium size crystals with flaws. A substantial increase in the size and perfection of the crystals requires far more time and effort for the fused salt technique than for competitive growth techniques. Because of this, fused salt methods are often abandoned when single crystals can be grown by other means. The difficult character of the fused salt technique is best revealed by the fact that hydrothermal single crystal growth can often be accomplished with greater ease and success than growth by fused salt methods.

The small size and imperfections of fused salt crystals stem from unsuitable conditions in the crystal growth system. The conditions needed for good crystal growth in these solvents must be more limited than the conditions needed for crystal growth from aqueous and organic solvents but the reason for the limitations is hard to identify. The unique characteristic of a fused salt solvent is that growth occurs from a diluted source material with driving forces reduced by the high temperatures. This is shown clearly by the expression for the free energy available for effecting crystal growth,

$$\Delta F = \frac{\Delta H_f}{T_o} \Delta T = RT \ln c/c_o = RT \ln s \qquad (1)$$

where

ΔF is the free energy available for effecting crystal growth (cal/mole)

ΔH_f is the enthalpy of crystallization, the heat of fusion (cal/mole)

ΔT is the temperature difference caused by undercooling (^{o}K)

T is the temperature of the solution where crystal growth is occurring (^{o}K)

T_o is the equilibrium temperature of the solution (^{o}K)

c is the concentration of supersaturated solute (moles/unit volume)

c_o is the saturation concentration at T_o (moles/unit volume)

and

s is the supersaturation ratio, c/c_o

As T_o increases, the value of $\Delta H/T_o$ decreases. A change from 300°K to 1750°K (1477°C) causes this ratio to decrease by a factor of nearly six, lowering the free energy available for producing crystal growth by the same amount. The effect of the increased temperature is even more pronounced in terms of the supersaturation ratio, c/c_o, whose logarithm depends on the inverse square of the temperature. For the growth of aluminum oxide crystals (ΔH_f = 26000 cal/mole) an undercooling (ΔT) of 1° at 300°K (27°C) corresponds to a supersaturation ratio (c/c_o) of 1.155, whereas, at 1750°K (1477°C) an undercooling of 1° corresponds to a supersaturation ratio of 1.004. An undercooling of almost 34°C is required at 1750°K (1477°C) to produce the supersaturation ratio which would be produced by a 1° undercooling at 300°K (27°C), all other factors being equal.

This reduction in the driving energy available for crystal growth and the production of smaller supersaturation ratios by given undercoolings limits the available crystal growth processes in fused salt solutions. Perhaps the most significant effect is the preference given to the screw dislocation mode of crystal growth over alternate growth modes. This in turn fixes the absolute growth rate and determines the rate at which supersaturation should be generated at the crystal face.

Other aspects of the fused salt method while presenting practical difficulties should not cause special limitations in the required crystal growing conditions. To be sure, the technology is demanding because of the high temperatures and the corrosive nature of the fused salt solvents. Nevertheless, a similar technology is required for the Czochralski growth technique by which excellent crystals can often be grown with only a reasonable research and development effort. Limitations upon required growth conditions cannot be attributed,in general, to the nature of the fused salt solvents. Ionic liquids; which form the majority of fused salt fluxes, are typical liquids not greatly different from molecular liquids such as water and benzene with respect to surface tension, viscosity, refractive index, and often density (Ref. 3). Molten salts generally differ from conventional liquids only in their freezing points and conductivities. The main difference between the structure of molten salts and molecular liquids arises from the necessity of arranging oppositely charged particles in nearest neighbor shells in the molten salts (Ref. 3). This does not apparently hinder the growth of large perfect crystals of these materials when Czochralski or Stockbarger techniques are applicable, i.e., when the molten salts do not serve as solvents for the crystallizing solid but form single crystals themselves.

The differences between crystal growth from fused salt solvents and other methods of crystal growth generate two groups of problems for the crystal grower. The first contains problems of technique arising from the methods which must be used to generate the supersaturated state and transfer it to the face of the growing crystal. The second group contains experimental and theoretical problems of crystal growth such as nucleation, growth rates, and crystal perfection. These problems of crystal growth are approached through the concept of supersaturation as a driving force for the formation of crystalline material. The two major groups of problems are inextricably entangled for the techniques of generating supersaturation often control the nucleation and growth rates.

The establishment of a proper supersaturated state at the growing face of the crystal is the major problem of technique. Supersaturation is an unstable condition disappearing by either the deposition of solute as bulk crystalline material, or by the generation and growth of crystal nuclei. In order to grow crystals, means must be found to ensure a continual replenishment of supersaturation. In addition, supersaturated solution must be brought through the solution to the crystal face. The success with which this bulk transfer is effected also determines the size and quality of the crystals.

Several methods are available for the generation of supersaturation in fused salt fluxes. They depend on deliberate changes in solution conditions which take place in times shorter than those required to initiate precipitation. The techniques customarily employed with fused salts are: (1) growth by slow cooling allowing multiple nucleation, (2) growth on a seed crystal using slow cooling, and (3) growth on a seed crystal using thermal gradients to transfer solute from polycrystalline nutrient to the seed. Each uses the change of solubility with temperature to create the supersaturation necessary for crystal growth. The alternate method of producing supersaturation by local evaporation of solvent is used only infrequently in fused salt growth. Theories which relate cooling rates and temperature gradients to the creation or loss of supersaturation are available or can be devised for each of the generation techniques. Theories which describe the conditions for the bulk transfer of supersaturated solution to the crystal are not so readily available but estimates of these conditions can be developed from heat flow considerations.

Absolute growth rates, crystalline perfection, and nucleation form the subject matter of the crystal growth problems. Models are required which show how supersaturation affects the formation of stable clusters of precipitating molecules and the rate of incorporation of solute into a growing crystal. Although almost no specific information has been reported about the degree of supersaturation required for crystal growth in fused salt melts, the degree of supersaturation

required for creating fresh two dimensional monolayers of molecules on a "saturated" crystal face is said to be at most one percent (Ref. 4) and may be much less. A larger degree of supersaturation is required for the self-nucleation of new crystals. The relationships of the supersaturations needed for growth and nucleation to the other properties of the crystal and the solution, such as the crystal surface energy and diffusion constant of the solute, is important in understanding the limits of particular crystal growing systems.

In the following section, an initial attack is begun on the general problem of using available crystal growth theories to develop better crystal growth procedures for fused salt solvents. The problems which are discussed have been limited to:

1. The relationships between the supersaturation requirements for crystal growth and the experimental parameters used to control supersaturation.
2. The rates at which different modes of growth occur and the conditions under which growth may be heat limited.
3. The temperature differences and the distances within the growth chamber which are needed to create convective flow.
4. The maximum sizes of crystals which can be grown without flaws under particular experimental conditions.
5. The conditions which give uniform dopant distributions in the growing crystal.

The fused salt fluxes have been left unspecified in these discussions but the crystalline precipitates used for sample calculations have been restricted to sapphire and ruby (aluminum oxide).

2.2 Practical Rates for the Generation of Supersaturation

The relationship between growth rates and the experimental conditions used to generate supersaturation has been given by Laudise (Ref. 2) for the slow cooling methods of fused salt crystal growth. A similar expression can be derived for the thermal gradient technique by straightforward changes in Laudise's equation. These formal expressions state that the information needed by the crystal grower for designing an efficient system is the change of solute solubility with temperature, the absolute growth rate of the crystal, the area of the growing face, and the mass of the melt which is active in the growth process.

For the slow cooling method of generating supersaturation, the rate of growth of the seed crystal is assumed equal to the gms of solute precipitated as the solution is cooled. This assumes that all supersaturation will be discharged at the growing face of the crystal. The rate is:

$$\left(\frac{dr}{dt}\right)_{sc} = \frac{M}{A\,\rho_c \rho_s} \left(\frac{dc_o}{dT}\right) \left(\frac{dT}{dt}\right) F_w \qquad (2)$$

where

$\left(\frac{dr}{dt}\right)_{sc}$ is the rate of growth of a crystal face (cm/hr) for a slow cooling method of effecting supersaturation

A is the area of the growing face (cm^2)

$\frac{dT}{dt}$ is the cooling rate ($^oC/hr$)

$\frac{dc_o}{dT}$ is the change in solubility of the solute per degree ($moles/cm^3\ ^oC$)

ρ_c is the density of the crystal

ρ_s is the density of the salt and solute melt

F_w is the molecular weight of the solute (gms/mole)

and

M is the total mass of the melt (gms)

When supersaturation is accomplished by the thermal gradient method, the product

$$M \left(\frac{dc_o}{dT}\right) \quad \frac{dT}{dt} \tag{3}$$

is replaced with

$$m \left(\frac{\Delta c_o}{\Delta T}\right) \Delta T \tag{4}$$

where Δc_o is the finite change in solubility caused by traversing the temperature drop, ΔT. The expression for dr/dt becomes:

$$\left(\frac{dr}{dt}\right)_{tg} = \frac{m}{A \rho_c \rho_s} \quad \frac{\Delta c_o}{\Delta T} \quad \Delta T \quad F_w \tag{5}$$

where

$\left(\frac{dr}{dt}\right)_{tg}$ is the rate of growth of a crystal face for the thermal gradient method of effecting supersaturation

m is the mass of melt swept by the crystal face per hour

and the other quantities have been defined above.

From equations (2) and (5), it is clear that the cooling and mass transfer rates required for efficient crystal growth can be calculated if the solubility curve and crystal growth rate are known. These parameters establish upper bounds on the rate at which supersaturation should be generated in the crystal growing system. If supersaturation is generated faster than the crystal face can grow or bulk transfer can take place, homogeneous nucleation may occur and multiple growth sites may become available. By distributing the total available solute over a number of growth sites, the maximum crystal mass possible for any site will then be correspondingly reduced.

Information about the change of solute solubility with temperature is best obtained by measurement. When data are not available the slope of the solubility curve can be estimated from thermodynamics if the system is assumed to follow the laws of an ideal solution. The required relation in terms of mole fraction of solute is:

$$\frac{dX}{dT} = X \frac{\Delta H_f}{RT^2} \tag{6}$$

where

$\frac{dX}{dT}$ is the change in the mole fraction of solute per degree

X is the mole fraction of solute (moles solute/moles solvent and moles solute)

ΔH_f is the enthalpy of fusion of the solute per mole (cal/mole)

T is the absolute temperature of the molten solvent (^{o}K)

and

R is the gas constant (cal/^{o}K mole)

This expression can be converted into practical units of solubility (moles/cm^3) for specific systems.

The prediction of crystal growth rates from theory has been reviewed by a number of authors (Ref. 5, 6, 7, 8) and theoretical expressions for these rates are available. While the theory is sometimes incomplete, it can often be combined with the data from actual growth experiments to predict the direction in which system parameters should be changed to improve results. The applicable theoretical expressions for growth rate are reviewed in the next section.

2.3 The Prediction of Growth Rates

The processes which determine the growth rates of crystals have been reviewed by both Hillig and Nielsen (Ref. 5, 6). These comprise diffusional transport, surface reactions by which the solute is incorporated into the crystal (screw dislocation growth, mononuclear growth and polynuclear growth) and the removal of the heat of precipitation from the growing surface. In order to estimate the growth rate for any specific flux and temperature combination, it is necessary to determine which of these processes is controlling.

The growth rate determined by any of the processes can be calculated from the physical properties of the crystal and solution if these are known. Complete data are usually lacking for the crystal growth systems of interest, but it is often possible to make valid estimates or approximations for much of the missing information. Usually the most important piece of missing data and the one most difficult to estimate is the value of the interfacial surface energy between crystal and flux. The surface energy of the solid which is desired, is the surface energy which it possesses in the melt, σ_{sl}. This is related to the surface energy of the solid in vacuum or an inert atmosphere by the relation,

$$\sigma_{sl} = \sigma_{sv} - \sigma_{lv} \cos \theta \tag{7}$$

where

σ_{sl} is the surface energy of the solid in the liquid

σ_{sv} is the surface energy of the solid with respect to an inert atmosphere or vacuum

σ_{lv} is the surface energy of the liquid (flux) with respect to an inert atmosphere or vacuum

and

θ is the angle between the solid surface and the tangent to the liquid surface at the contact point

When complete wetting occurs, $\theta = 0$, and equation (5) becomes

$$\sigma_{sl} = \sigma_{sv} - \sigma_{lv} \tag{8}$$

For most fused salt growth systems, only the value of σ_{sv} is available for use in calculations.

The uncertainties which come into the calculation of growth rates because measured data are not available for all the necessary crystal and solution properties can usually be reduced by computing the ratios of growth rates. If the ratio of the rates for two different growth processes is computed or the conditions under which the rates for the two processes are equal are compared, unknown but indentical solution constants often cancel. By this technique, the regions where each rate is controlling can be established and the desired crystal growth conditions can be identified when basic data are lacking.

The expressions for the growth rates as given by Nielsen (Ref. 6) have been used for comparative estimates of the growth rates of aluminum oxide from fused fluxes. The expressions have been converted to a molar system of units by dividing the number concentrations and ionic or molecular volumes used by Nielsen by Avogadro's number. The expressions for the rates are:

1. Screw Dislocation (surface spiral steps)

$$\left(\frac{dr}{dt}\right)_{sd} = \frac{D c g \, \Delta S^2 \, \Delta T^2}{20 \sigma \, R T} \tag{9}$$

2. Mononuclear Growth (surface nucleation with one surface nucleus per molecular or ionic layer)

$$\left(\frac{dr}{dt}\right)_{m} = \frac{4 D r^2 g N}{V} \exp\left(- \frac{\Delta G'^* N}{R T}\right) \tag{10}$$

3. Polynuclear Growth (surface nucleation with several intergrowing surface nuclei per layer)

$$\left(\frac{dr}{dt}\right)_p = DV^{1/3}(c - c_o)^{2/3} g\, N^{1/3} \exp\left(-\frac{\Delta G'^* N}{3RT}\right) \qquad (11)$$

4. Diffusion (the growth rate being controlled by diffusional transport through the solution)

$$\left(\frac{dr}{dt}\right)_D = \frac{DV(c - c_o)}{r} \qquad (12)$$

where

ΔS is the entropy of precipitation $\Delta H_f/T_o$ (cal/mole ^oK)

T_o is the temperature where the solubility is equal to the actual concentration (^oK)

ΔT is $T - T_o$

r is the radius of the crystal (cm)

D is the diffusion coefficient of the solute (cm^2/sec)

V is the mean ionic volume of the solute (cm^3/mole)

c is the concentration of the solute (moles/cm^3)

c_o is the equilibrium solubility at T_o (moles/cm^3)

σ is the interfacial surface tension between crystal and solution (cal/cm^2)

β' is a geometrical constant, β' is π for circular and 4 for square nuclei

$$\Delta G'^* \cong \frac{\beta' \sigma^2 V^{4/3}}{\Delta S\, \Delta T\, N^{1/3}} \qquad (13)$$

N is Avogadro's number, 6.02×10^{23}

and

g is a factor that expresses any activation energy for transfer of an ion from the solution into the crystal lattice in excess of normal transport activation energy in the solution

The factor g as used by Nielsen (Ref. 7), is difficult to identify. Presumably, it is an exponential correction to the diffusion constant, D, which applies during the transfer of solute from solution to solid.

Thus,

$$D_{ls} = D_{sol} \exp\left(-\frac{\Delta F^*_{ls}}{RT}\right) \tag{14}$$

where

D_{ls} is the diffusion constant for diffusion from the solution to the solid

D_{sol} is the diffusion constant of the solute in the solution

ΔF^*_{ls} is the excess free energy of activation for a molecule or ion of solute diffusing from the solution to the solid over the energy required for diffusion in the solution

$$\Delta F^*_{ls} \cong \Delta H_{sol}$$

where ΔH_{sol} is the partial molar heat of solution of the diffusing molecule or ion. Nielsen states that for strongly solvated aqueous ions at room temperature $g \ll 1$. However, for fused salt fluxes, the increased temperature where fluidity occurs act to drive the value of g toward unity. For a fused salt flux at 1750°K (1477°C) the logarithm of g is smaller by the factor (5.8), (300/1750 equals 1/5.8) from the logarithm at 300°K.

If the value of dr/dt is computed for the screw dislocation process using a value of D of 10^{-5} cm^2/sec which is representative for fused salt melts (Ref. 9, 10) a value of ΔS equal to the heat of fusion of aluminum oxide (Ref. 11) divided by a temperature of 1750°K (1477°C), a value of σ of 2.16×10^{-5} k cal/cm^2, the value of the surface energy of aluminum oxide in vacuum (Ref. 8) multiplied by a constant, k, which corrects for the probable lower value in solution, the value of dr/dt becomes:

$$\left(\frac{dr}{dt}\right)_{sd} = \frac{5.25\ cg\ \Delta T^2}{k} \quad (cm/hr) \tag{15}$$

Using the value of the surface energy employed in the calculation of the screw dislocation rate, a value of 4 for β' and a value of V of 25.5 cm^3/mole (Ref. 12) the growth rate, dr/dt for a mononuclear growth process on aluminum oxide at 1750°K (1477°C) is:

$$\left(\frac{dr}{dt}\right)_m = 3.4 \times 10^{21} r^2 g\, 10^{-\frac{8390k^2}{\Delta T}} \text{ (cm/hr)} \tag{16}$$

If the rates for the mononuclear growth process and the screw dislocation process are equated, it is found that for a crystalline surface energy equivalent to that of aluminum oxide in vacuum, (k=1) an undercooling of greater than 400°C is necessary to make the two rates equal for crystals 1 mm or more in radius, whereas, an undercooling of about 4° is necessary for equal rates if a crystalline surface energy one-tenth that of the surface energy in vacuum is used (k = 0.1).

The same calculations applied to the polynuclear growth rate expression show that if the crystalline surface energy equals that of aluminum oxide in vacuum, (k = 1) the polynuclear growth rate will never equal the screw dislocation rate at any undercooling, whereas, if the surface energy is one-tenth that of vacuum, an undercooling of about 6°C makes the two rates equal.

Finally, if the same values of solution and crystalline properties are substituted in the data for diffusion growth,

$$\left(\frac{dr}{dt}\right)_D = 0.92 \frac{(c - c_o)}{r} \text{ (cm/hr)} \tag{17}$$

For a 1 mm crystal, the diffusion rate becomes

$$\left(\frac{dr}{dt}\right)_D = 9.2(c - c_o)\text{(cm/hr)} \tag{18}$$

The value of $c - c_o$ is not independent of the undercooling if the values for c are calculated from the expression

$$\frac{\Delta H_f}{T_o} \Delta T = R\, T \ln c/c_o \tag{1}$$

A value of c/c_o of 1.0043 is found for 1^oC undercooling, 1.043 for 10^oC undercooling and 1.531 for 100^oC of undercooling. A 1 mm crystal of aluminum oxide growing by the diffusion process has a rate of growth at 10^oC undercooling of,

$$\left(\frac{dr}{dt}\right)_D = 9.2 \times 0.043\ c_o$$
$$= 0.396\ c_o\ (cm/hr) \tag{19}$$

It may be concluded that the screw dislocation mechanism, if operable, provides the fastest rate of growth in fused salt fluxes for undercooling of 4^oC or less, the mononuclear and polynuclear mechanisms comparable or greater rates for undercoolings of 5 or 10^oC and crystalline surface energies one-tenth that of vacuum. If the interfacial surface energy is equal to that of vacuum, then pure diffusion growth is probably the fastest growth process for very small crystals and the screw dislocation growth rate the fastest for large crystals and undercoolings up to 100^oC.

The rate of growth determined by heat flow has been calculated for metals by several authors (Ref. 13, 14, 15). A satisfactory approximate expression for slow steady-state heat flow controlled growth in a nonmetallic liquid is given by Hillig (Ref. 5). This is derived from the defining equation

Rate of heat liberated by precipitating crystal per unit area	=	Rate at which heat flows from the interface between crystal and solution per unit area

Using symbols, equation (19) may be written:

$$\left(\frac{dr}{dt}\right)_{hf} \Delta H_v = GK \frac{\left(T_i - T_\infty\right)}{Y} \tag{20}$$

where

$\left(\frac{dr}{dt}\right)_{hf}$ is the rate of crystal growth (cm/sec)

ΔH_v is the heat of crystallization per unit volume (cal/cm^3)

Y is a characteristic length for the advancing interface, such as its radius of curvature (cm)

G is a geometrical constant of order unity

K is the thermal conductivity of the crystal if heat flows away through the crystal, or the solution, if the heat flows through the solution (cal - cm/sec cm^2 ^oK)

T_i is the temperature at the interface between crystal and solution (^oK)

and

T_∞ is the temperature of the thermostat in which the system is placed, the wall of the crucible for precipitation on a crucible wall (^oK)

The rate of crystal growth for a heat controlled process is then,

$$\left(\frac{dr}{dt}\right)_{hf} = \frac{GK}{Y\,\Delta H_v}\left(T_i - T_\infty\right) \tag{21}$$

Data on the thermal conductivity of ionic melts is almost completely lacking (Ref. 16). Values of thermal conductivity for single crystal sapphire (Ref. 17, 18) indicate that a value of 0.02 cal - cm/sec cm^2 ^oK will not be exceeded above 1000°C. Since thermal conductivity in ionic melts and solids at temperatures between 1000°C and 2000°C is primarily carried out by phonon conduction processes, the value of 0.02 cal - cm/sec cm^2 ^oK should also represent an upper bound for the fused salts in which the aluminum oxide is dissolved.

The value of ΔH_v for aluminum oxide may be taken as:

$$\frac{26,000}{25.5} = 1020 \quad \text{cal/cm}^3$$

If the values of K and ΔH_v are inserted into equation (21), the rate of growth, V, for a heat flow controlled growth process is:

$$\left(\frac{dr}{dt}\right)_{hf} = 1.96 \times 10^{-5} \frac{G}{Y} \left(T_i - T_\infty\right) \text{ (cm/sec)}$$

or

$$\left(\frac{dr}{dt}\right)_{hf} = 7.05 \times 10^{-2} \frac{G}{Y} \left(T_i - T_\infty\right) \text{ (cm/hr)} \tag{22}$$

When the rates of growth determined by the two processes, screw dislocation surface reaction and heat flow, are compared by taking the ratio of one to the other, the resulting expression is:

$$\frac{\left(\frac{dr}{dt}\right)_{hf}}{\left(\frac{dr}{dt}\right)_{sd}} = \frac{\text{rate controlled by heat flow}}{\text{rate controlled by screw dislocation}} =$$

$$\frac{7.05 \times 10^{-2} \frac{G}{Y} \left(T_i - T_\infty\right)}{5.25 \text{ cg} \left(T_i - T\right)^2/k} \tag{23}$$

$$\frac{V}{u} = \frac{1.34 \times 10^{-2} k \frac{G}{Y} \left(T_i - T_\infty\right)}{\text{cg } \Delta T^2}$$

Several growth situations can be visualized which give different values for this ratio . For example, consider that G = 1, Y = 1 mm (0.1 cm), and the temperature difference over which the cooling gradient occurs $(T_i - T_\infty)$ is 10°K.

Then,

$$\frac{\left(\frac{dr}{dt}\right)_{hf}}{\left(\frac{dr}{dt}\right)_{sd}} = \frac{1.34\ k}{cg\left(T_i - T_o\right)^2} \tag{24}$$

A mole fraction solute of 0.2 **aluminum oxide in a fused melt will** correspond to a concentration of approximately 5×10^{-3} moles/cm^3. If an undercooling $(T_i - T_o)$ of 1^oK or less is assumed, then the ratio is greater than,

$$\frac{270\,k}{g}$$

and the growth process is clearly controlled by surface reaction since $k \geq 0.1$ and $g \leq 1$ so that the heat flow controlled growth rate will be many times the surface reaction controlled rate. All other factors remaining equal, this relationship can change when undercoolings of 5^oC $(k = 0.1)$ to 20^oC $(k = 1)$ or greater are reached, for then the surface reaction controlled growth rate which is increasing by the square of the temperature difference begins to exceed the heat flow controlled rate. The major unknown is the value of g. If it is assumed that

$$g = \exp\left(-\frac{\Delta H_{sol}}{RT}\right) \tag{25}$$

then using representative values for the partial molal enthalpy of mixing for aluminum oxide of 4000 cal/mole, equation (25) gives a value of g of 0.32 at 1750^oK. A value of 1000 cal/mole corresponds to a value of 0.75 for g at the same temperature. At 300^oK, these g values would have been 0.001 and 0.19 respectively.

The analysis shows that no a priori answer is available from theory for specifying whether heat flow or a screw dislocation process will control the rate of crystal growth in a flux system precipitating aluminum oxide around 1477^oC If the theoretical models are accepted as valid, the largest uncertainty in the calculation is the value of the surface free energy of aluminum oxide in the melt.

The ratio of the actual value of this property to the value in vacuum, k, comes linearly into the estimate of the comparison of the two growth rates.

The variable ratio of the rates of the two controlling processes illustrates the difficulty of stating which process will control a particular crystal growth technique unless actual temperature differences are specified.

2.4 Nucleation

One obstacle to the controlled growth of large crystals from fused salts is the presence of unwanted nuclei. It is clear that such nuclei are present in many fused salt growth experiments from the large number of small crystals produced. The source of these nuclei is not usually known. Nuclei may be supplied by nucleation sites upon the crucible wall, insoluble particles in the flux, or by the abrasion of a larger crystal moving in the melt. Nuclei may also be generated spontaneously in the flux by the supersaturation.

The control of nucleation requires identifying the source of nuclei. Theory can help to some extent for theoretical analyses are available which give the rate of nuclei generation in terms of the solution supersaturation and crystal properties. Analyses are also available which estimate the rate at which the nuclei generating properties of the flux respond to a change in conditions. For molten salt systems, this response time is very short.

The rate of homogeneous nucleation in a liquid solid system composed of spherical nuclei is,

$$I = \begin{array}{l}\text{Number of supercritical}\\ \text{nuclei generated per}\\ \text{unit volume per second}\end{array} = \left[\begin{array}{l}\text{Rate at which}\\ \text{molecules join}\\ \text{nuclei}\end{array}\right] \cdot \left[\begin{array}{l}\text{Number of critical}\\ \text{nuclei per unit}\\ \text{volume}\end{array}\right] \qquad (26)$$

where the critical nuclei are defined as those nuclei which have attained their maximum free energy so that any further increase in size will lower their free energy, and the supercritical nuclei are those nuclei with radii greater than that of a critical nucleus.

Under steady state condtions of temperature and supersaturation, the expression for I (Ref. 8) is

$$I = \left[\frac{N^*_s RT}{h N} \exp\left(- \frac{\Delta F_D}{RT} \right) \right] \cdot \left[N c \exp\left(- \frac{N \Delta F^*_v}{RT} \right) \right] \tag{27}$$

where

N^*_s	is the number of atoms adjacent to the surface layer of the nucleus of critical size
R	is the gas constant (cal/ ^oK mole)
h	is Planck's constant 1.58×10^{-34} (cal sec)
T	is the temperature at which the nucleus is forming in ^oK
ΔF_D	is the free energy of activation for diffusion (cal/mole)
T	is the temperature of the system in ^oK
c	is the concentration of solute per unit volume (moles/cm^3)
N	is Avogadro's number

and

ΔF^*_v is the free energy per unit volume produced by the transformation of dissolved solute into precipitated solute under the conditions of supersaturation. For spherical nuclei

$$\Delta F^*_v = \frac{16 \pi \sigma^3}{3 \Delta F_v^2}$$

or (28)

$$\Delta F^*_v = \frac{16 \pi \sigma^3 T_o^2}{3 \Delta H_v^2 (T_o - T)^2}$$

In order to estimate the rate at which new nuclei are formed under steady state conditions at specified amounts of undercooling, it is necessary to know

σ_{sl} the interfacial energy of the solid in the presence of the melt

ΔF_D the free energy per mole of activation for diffusion

and

ΔH_v the heat of fusion per mole of the solute

The problem of identifying the interfacial energy of the solid in the melt, σ_{sl} has been discussed in Section 2.3.

The free energy per mole of activation for diffusion, ΔF_D, is generally taken as equal in magnitude but opposite in sign to the energy of activation for viscosity. This in turn may be estimated from the relationship

$$\Delta F_{vis} \cong \frac{\Delta E_{vap}}{3} = 18.9 \times 10^3 \text{ (cal/mole)} \tag{29}$$

where ΔE_{vap} is the energy of vaporization of the pure liquid flux (Ref. 9).

The number of atoms adjacent to the surface layer of the nucleus of critical size can be estimated for aluminum oxide nuclei in terms of the undercooling and the ratio, k, of the surface energy of aluminum oxide crystals in the melt to the surface energy of aluminum oxide crystals in vacuum. The radius of a spherical critical nucleus is given by the expression

$$r^* = \frac{2\sigma}{\Delta F_v} \tag{30}$$

where

σ is the surface free energy of the nucleus

and

ΔF_v is the free energy per unit volume for the formation of the solid from the liquid phase

For fused salt solvents, ΔF_v may be approximated as

$$\Delta F_v = \frac{\Delta H_v (T_o - T)}{T_o} \tag{31}$$

where

ΔH_v is the heat of fusion of the pure solute per unit volume at the temperature, T_o

T_o is the equilibrium temperature of the melt

and

T is the temperature of undercooling

If the value of ΔH_v for aluminum oxide is taken as

$$\frac{26,000}{25.5} = 1020 \ (\text{cal/cm}^3)$$

T_o as 1750^oK (1477^oC), and the surface energy σ as $2.16 \times 10^{-5}k$, where k is the ratio between the surface energy of aluminum oxide in the fused salt solution to that in vacuum

then

$$r^*_{Al_2O_3} = 7.41 \times 10^{-5} \frac{k}{\Delta T} \ (\text{cm}) \tag{32}$$

and the average number of dissolved aluminum oxide molecules which would be next to such a nucleus would be determined by dividing $4\pi r^{*2}$ by the average cross sectional area of a molecule in the flux times the mole fraction of aluminum oxide present.

Then,

$$\text{Number of } Al_2O_3 \text{ molecules adjacent to the critical nucleus} = \frac{\text{Area of Nucleus}}{\text{mole fraction of } Al_2O_3 \quad \text{average cross sectional molecular area}} \tag{34}$$

$$\approx 5.7 \times 10^{+7} \frac{k^2}{\Delta T^2 X_{Al_2O_3}}$$

where $X_{Al_2O_3}$ is the mole fraction of aluminum oxide in the melt.

If the values for the interfacial surface energy and ΔH_v for aluminum oxide are substituted in the equation for I, the result for a melt containing 20 mole percent Al_2O_3 at 1750°K is

$$I = \frac{1.425 \times 10^{41} k^2}{\Delta T^2} \exp\left(-\frac{0.865 \times 10^8 k^3}{\Delta T^2}\right). \tag{35}$$

When the value of the interfacial surface energy of aluminum oxide in the melt is assumed equal to that of the surface energy of aluminum oxide in vacuum, an undercooling ΔT of more than 1000°C is necessary to generate nuclei at the rate of one every ten seconds. For an assumed interfacial energy one-tenth that of aluminum oxide in vacuum, an undercooling of approximately 30°C would generate one nucleus every ten seconds.

The rate of nuclei generation is dependent upon the inverse square of the undercooling in the exponential factor and decreases sharply with small undercoolings. An undercooling of 20°C at a temperature of 1750°K (1477°C), and an interfacial surface energy of one-tenth that of the crystalline surface

energy of aluminum oxide in vacuum corresponds to a rate of nuclei production of

$$I \approx 1 \times 10^{-53.6} \text{ nuclei/hr} \tag{36}$$

It may be concluded that at 1750°K, undercoolings up to 20°C should not cause rates of spontaneous nuclei generation which will interfere with the growth of single crystals of aluminum oxide from the fused fluxes.

Knowledge of the rate at which the flux system responds to a change of conditions is also crucial to achieving controlled growth. An expression for the time lag which occurs before the initial distribution of embryoes adjusts itself to the distribution characteristic of the supersaturation has been given by Dunning (Ref. 19). This expression is:

$$I(t) = I_o \exp\left(-\frac{N_c^2}{gt}\right) \tag{37}$$

where

- $I(t)$ is the instantaneous ratio of nucleation
- I_o is the initial rate of nucleation
- N_c is the number of molecules in the critical nucleus
- t is the time

N^*_s has been defined previously, and g is approximately, g_1, where,

$$g_1 = N^*_s \frac{k}{h} T \exp\left(-\frac{\Delta F_d}{RT}\right) \tag{38}$$

Thus the characteristic time τ is

$$\tau = \frac{N_c^2}{g_1} = \frac{1.7 \times 10^2 k^4 X_{Al_2O_3}}{\Delta T^4} \tag{39}$$

When the values of N_c and g_1 are computed for aluminum oxide dissolved in molten fluxes at 1477°C, assuming ΔF_d equals 18,900 cal/mole (Ref. 9), the value of τ varies depending on the interfacial surface energy and the undercooling: for $\Delta T = 1^{\circ}C$ and k = 1, τ is 35 seconds whereas for $\Delta T = 10^{\circ}C$ and k = 0.1 τ is 0.35 microseconds. For crystal growth systems which have cooling rates measured in degrees per hour, the rate of establishing the distribution of nucleation embryoes should not influence the growth procedures.

2.5 Development of Thermal Convection

In unstirred crucibles, transport of solute to the growing crystal can occur by diffusion alone or by a combination of diffusion and convection. This last is preferable because the times required to effect crystal growth by diffusion of solute across a one or two centimeter distance in the crucible can be extremely long. The characteristic time for diffusion over a one centimeter length for a typical fused salt is given by the expression (Ref. 9)

$$\tau = \frac{h^2}{\pi D} = \frac{(1\ \text{cm})^2}{\pi\, 10^{-5}} = 3.2 \times 10^4 \text{ secs} = 8.8 \text{ hrs} \tag{40}$$

This is a relatively long time for most fused salt growth experiments where the rate of cooling the whole system is in the order of several degrees per hour. An equilibration time of nearly nine hours for diffusion of solute over a one centimeter distance coupled with a cooling rate of several degrees per hour for the system means that only regions of the solvent very close to the crystal contribute appreciably to its growth.

Because of the long times required for diffusional transport, it is desirable to ensure forced transport of supersaturated solvent past the crystal either by convection currents, stirring, or the combined use of both convection and stirring. For most crystal growth experiments, stirring can be accomplished straightforwardly and the establishment of convection currents presents the major problem in design. While convection currents occur in almost all situations where temperature gradients exist and fluid flow is possible, theoretical solutions to convective flow problems are very scarce. The limiting conditions which will lead to the establishment of convection can be estimated with some accuracy but estimates of the magnitude of the convective flows are more uncertain, and must usually be made through generalized heat transfer relationships.

The preferred arrangement to initiate convection in a crucible is with the colder surface on top, the warmer surface on the bottom. Under these conditions an unstable stratification develops which breaks down to give convective flow. For the opposite situation, the hotter surface on top and the cooler surface below, no convection should occur in theory. In practice, edge effects and non-uniformity of surface temperatures may induce some convection.

The relationship which relates the onset of convection to the distances, temperature changes, and solution properties of the fused salt growth system (Ref. 20, 21) is

$$N_{Gr} N_{Pr} > 1108 \tag{41}$$

where

N_{Gr} is the Grashof number

$$N_{Gr} = \frac{g_1 \beta \theta_{\infty} L^3}{\nu^2} \tag{42}$$

g_1 is the gravitational constant ($cm^3/gm\ sec$)

β is the coefficient of thermal expansion

$$\beta = \frac{1}{V}\left(\frac{dV}{dT}\right) = \rho \frac{d\left(\frac{1}{\rho}\right)}{dT} \quad (^{o}C^{-1}) \tag{43}$$

θ_{∞} is the temperature difference between the top and bottom surfaces of the melt (^{o}C)

L is the characteristic dimension of the system, the height of liquid (cm)

ν is the kinematic viscosity, μ/ρ (cm^2/sec) where μ is the viscosity (gm/cm sec), and ρ_s is the density of the solution (gm/cm^3)

and

N_{Pr} is the Prandtl number

$$N_{Pr} = \frac{\nu}{\alpha} \tag{44}$$

α is the thermal diffusivity of the fluid, $\alpha = \frac{K}{\rho c}$ (cm^2/sec)

K is the thermal conductivity (cal cm/cm^2 sec ^{o}K), ρ_s is the density (gm/cm^3) and c_p is the specific heat capacity of the liquid (cal/gm ^{o}C)

The product

$$N_{Gr} N_{Pr} = \frac{\rho^2 c_p \beta g_1}{\mu k} L^3 \theta_{\infty} = a L^3 \theta_{\infty} \tag{45}$$

where

$$a = \frac{\rho^2 c_p g_1 \beta}{\mu k} \tag{46}$$

is the convective modulus; a has the units $cm^{-3}\,{}^{o}C^{-1}$.

In the absence of theoretical solutions of the convective flow problem, estimates of the average magnitudes of the mass flow can be obtained directly from heat transfer relationships, if concentration profiles in the crystal growing system are determined by the convective heat flow and not by mass diffusion. The heat flow from the bottom of a crucible through the melt to the top surface of the molten salt takes place by radiation, conduction and convection. If the convective heat flow, q_c, can be isolated and mass diffusion flows are negligible, the average convective mass flow must be equal to the convective heat flow, q_c, divided by the average heat capacity per unit mass times the temperature drop through which the flow takes place.

Thus,

$$V_{av} = \frac{q_c}{c_p (T_T - T_B)} \tag{47}$$

where

V_{av} is the average mass flow per unit area (gms/sec cm^2)

q_c is the convective heat flow (cal/cm^2 sec)

c_p is the heat capacity of the liquid (cal/gm $^\circ$C)

and

T_T and T_B are the respective temperatures at the top and bottom surfaces of the melt.

The convective heat flow between parallel surfaces is estimated from the expression (Ref. 23)

$$q_c = h_c (T_T - T_B) \tag{48}$$

where h_c is the convective heat transfer coefficient (cal/cm^{2}sec $^\circ$C).

Thus the rate of material transport is

$$V_{av} = \frac{q_c}{c_p (T_T - T_B)} = \frac{h (T_T - T_B)}{c_p (T_T - T_B)} = \frac{h}{c_p} \tag{49}$$

Measured heat transfer data are usually given in terms of a heat transfer coefficient combining both convection and conduction. At values of the convective modulus, a, of approximately 1000 or less, heat transfer between horizontal surfaces is through conduction only. At larger values of the convective modulus, a, both convection and conduction participate.

In order to estimate mass flows from available data, the reported heat transfer coefficients must be corrected for conduction. The correction factor is derived from the relation

$$q_{cond} = \frac{K}{L} (T_T - T_B) \tag{50}$$

where

K is the thermal conductivity of the melt

and

L is the vertical thickness of the melt in the crucible.

Since,

$$q_{conv \text{ and } cond} = h_{cond \text{ and } conv} (T_T - T_B) \tag{51}$$

$$q_{conv} = \left(h_{cond \text{ and } conv} - \frac{K}{L}\right)\left(T_T - T_B\right) \tag{52}$$

Then,

$$V_{Av} = \frac{\left(h_{cond \text{ and } conv} - \frac{K}{L}\right)}{c_p} \tag{53}$$

Experimental curves are available expressing h for conduction and convection in terms of the convective modulus, the distance, L, across the gap and the temperature drop ($T_T - T_B = \theta$). Thus, for parallel horizontal plates (Ref. 22)

$$h_{\text{cond and conv}} = \frac{K}{L} \; 0.208 \; (l^3 a \, \theta)^{1/4} \tag{54}$$

and the rate of mass transfer is

$$\frac{h_{\text{cond and conv}}}{c_p} = \frac{K}{L c_p} \; 0.208 \; (l^3 a \, \theta)^{1/4} \tag{55}$$

The data required to estimate convective mass transfer rates for a specific fused salt solution must be obtained by measurements. Estimates for a particular fused salt solvent are made in Section V of this report using experimental data reported in Section IV.

2.6 Inclusion Formation

Solvent inclusion in flux grown crystals is believed to be caused by improper solution flow at the crystal surface. If solute is not delivered uniformly over the growing crystal face, points of lower supersaturation are present, growth is slower at these than at adjacent points of higher supersaturation and conditions for the development of an inclusion are present.

The prevention of inclusions requires control of the currents which bring nutrient to the growing crystal face. This can be best accomplished by forced stirring but well designed convective flow patterns can also be used.

Inclusion formation during stirring has been discussed by Sheftal (Ref. 24) and Carlson (Ref. 25). The latter gives an expression for the crystal length which can occur without generating inclusions as a function of the velocity of solution sweeping past it. This expression is

$$X_s = \frac{0.214\, vD \left(c - c_o\right)^2}{P_d^{1/3} \left(\frac{\rho_c}{F_{sw}} \frac{dr}{dt}\right)^2} \tag{56}$$

where

X_s is the length of crystal face which will be free on inclusions (cm)

v is the bulk fluid velocity of the solvent sweeping past the face (cm/sec)

D is the diffusion constant (cm^2/sec)

P_d is the dimensionless Schmidt number, $P_d = \frac{\mu}{\rho_s D}$

μ is the fluid viscosity (gm/cm^3), and ρ_s is the fluid density (gm/cm^3)

ρ_c is the crystal density (gm/cm^3)

$\frac{dr}{dt}$ is the rate of solute deposition (cm/sec)

$c - c_o$ is the difference in concentration between the supersaturation condition in the solution and the equilibrium solubility, c_o

and

F_w is the molecular weight of the solute ($moles/cm^3$)

In the expression for X_s, there are two variables whose value must usually be estimated from theory. These are; dr/dt and v. Direct measurement of either is desirable but difficult since it must be accomplished either through a growth experiment, dr/dt, or through an experimental arrangement nearly identical with the actual growth experiment, v. Methods of estimating both dr/dt and v have been given in preceding sections.

2.7 Distribution of Dopant

Flux grown crystals often contain nonuniform distributions of dopant ions. This can occur when the molten solvent traversing a crystal face deposits dopant at a rate which is not in a fixed ratio to the rate at which it deposits the solute which forms the bulk crystal. Such a varying rate can be caused by a temperature difference across the crystal, or by a change in the relative concentrations of dopant to bulk solute in the liquid across the crystal face.

Correction of inhomogeneous doping begins with ensuring that the faces where crystal growth occurs are at a uniform temperature. The elimination of dopant concentration changes in the liquid is more difficult. These can be reduced by ensuring that a much larger flow of nutrient liquid passes the growing crystal face than is needed for growth so that the change in dopant concentration of the liquid from the beginning to the end of the flow pattern is small.

It is not reasonable to expect uniform dopant concentrations in flux grown crystals if growth systems are used which depend only on diffusional transport. The experimental approach which must be followed to ensure uniform dopant distributions is to design the crystal growing system so that stagnant flow patterns are absent. If either stirring or convective flow is used, temperature gradients and distances must be correctly proportioned so that a smooth steady transfer of supersaturated solvent moves across the growing crystal face.

III. EXPERIMENTAL

Laboratory determinations of the solubility, density, and viscosity of the fused salt melts were required to accomplish the objectives of the program. Since the temperature region of interest (1400°C or greater) was beyond the limits of conventional equipment, special apparatus had to be designed and built for these measurements. In all, four types of measuring apparatuses were built although only three were employed during the program. The four were: (1) a thermal analysis apparatus, (2) a quenching apparatus for solubility and supersolubility studies, (3) a fused salt density measuring apparatus, and (4) a fused salt viscosimeter. Descriptions of the equipment and the methods of use are given below.

The chemicals used in the experimental program were of reagent grade quality. Materials for the molten salt solutions were dry mixed and isostatically pressed into billets weighing 316 gms. Each billet was broken into two pieces and melted separately into one crucible. The pressing was found desirable to reduce the large shrinkage which normally occurred when the mixed powders were melted the first time.

Early experiments revealed the need for a gas tight furnace chamber. Extensive hydrolysis of the fluoride fluxes apparently occurred during the heating up period unless special precautions were taken to eliminate moisture from the furnace chamber. This problem was solved by using tightly fitting plates at the ends of the inner tube of the furnace. The seals to the ceramic furnace lining were made with o-rings, and the plates were water cooled.

During experimental measurements, the furnace chamber was filled with dry helium and only opened during the times when an actual measurement was made.

3.1 Solubility and Supersolubility Determinations

Solubility and supersolubility determinations were to be accomplished with (1) a thermal analysis apparatus based on cooling curve measurements, and (2) a quenching block apparatus.

The thermal analysis apparatus is shown in Figures 1 and 2. Figure 1 is a schematic of the apparatus as used. Figure 2 is a photograph showing the assembled components of the apparatus. Flux is held in a molybdenum crucible placed in a machined graphite block. This block has a machined cover through which a stirrer, inert gas feed, and thermocouple are inserted. The whole apparatus is heated in a 2" diameter globar furnace lined with a high temperature alumina tube. Temperature is measured with a platinum-platinum rhodium thermocouple and an Esterline Angus potentiometric recorder.

The flux is melted by raising the furnace temperature. After a molten state has been achieved, the temperature of the furnace is held constant for a quarter to one-half hour, then the stirrer motor is started, and the power input to the furnace cut-off. Cooling of the charge begins immediately. The temperature of the charge is recorded on the strip chart of the Esterline Angus recorder as the furnace cools. At the freezing point, the stirrer ceases turning and a noticeable arrest is seen in the plot of emf versus time.

The quenching block apparatus for solubility determinations is patterned after one described by Barton, Friedman, and Tucker (Ref. 25, 26, 27). Changes in the design were made to facilitate machining. The block of Barton and coworkers was made from nickel. This material could not be used at the temperatures required for the present work. Molybdenum was used instead.

A schematic drawing of the gradient quenching apparatus is shown in Figure 3. A photograph of the molybdenum halves of the apparatus in Figure 4. The quenching unit consists of a quenching tube filled with the material under study and an instrumented holding block. The apparatus is designed to locate

THERMAL ANALYSIS APPARATUS

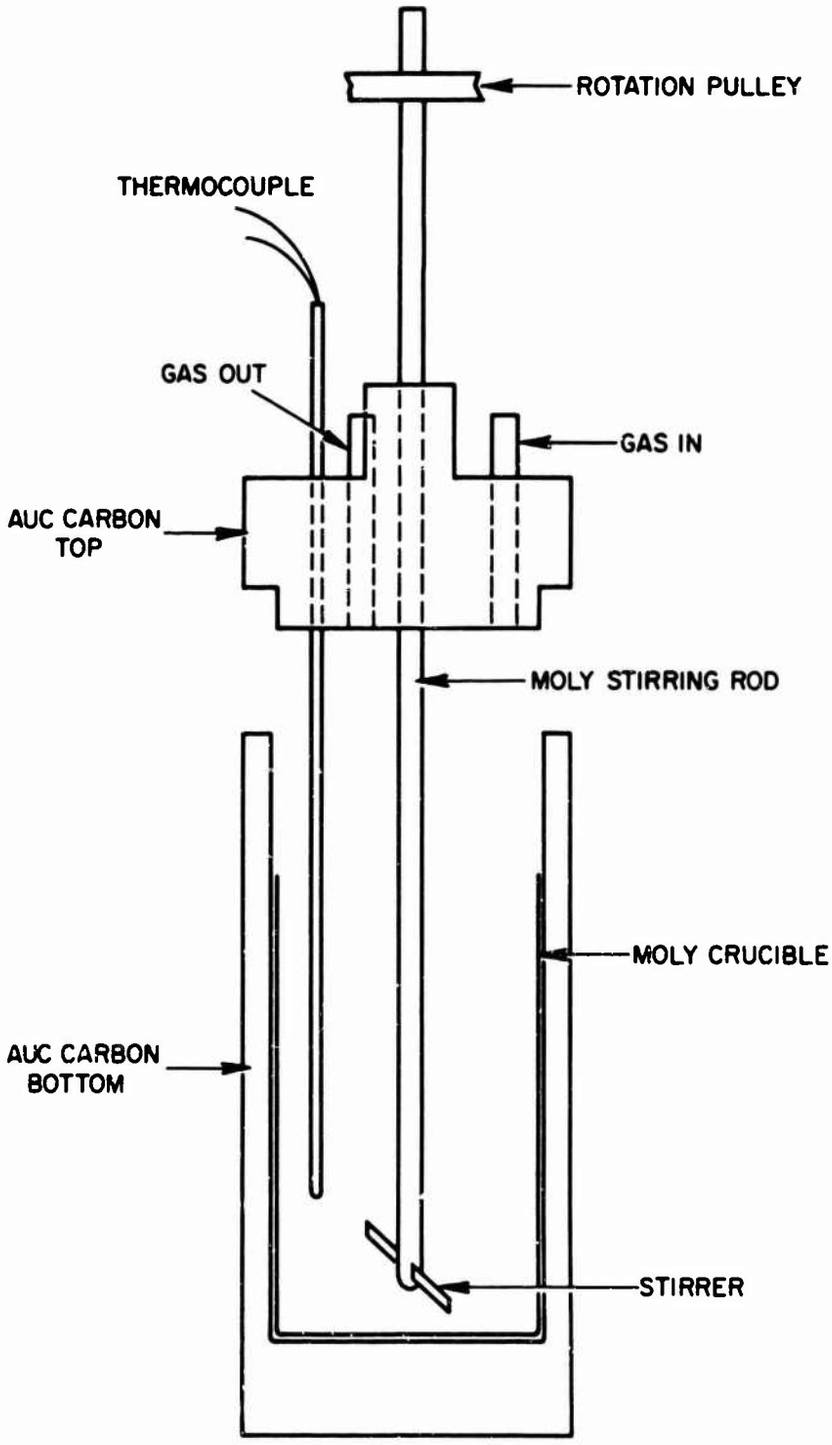

Figure 1

1572

COOLING CURVE APPARATUS

DH-OCS

Figure 2

QUENCHING APPARATUS

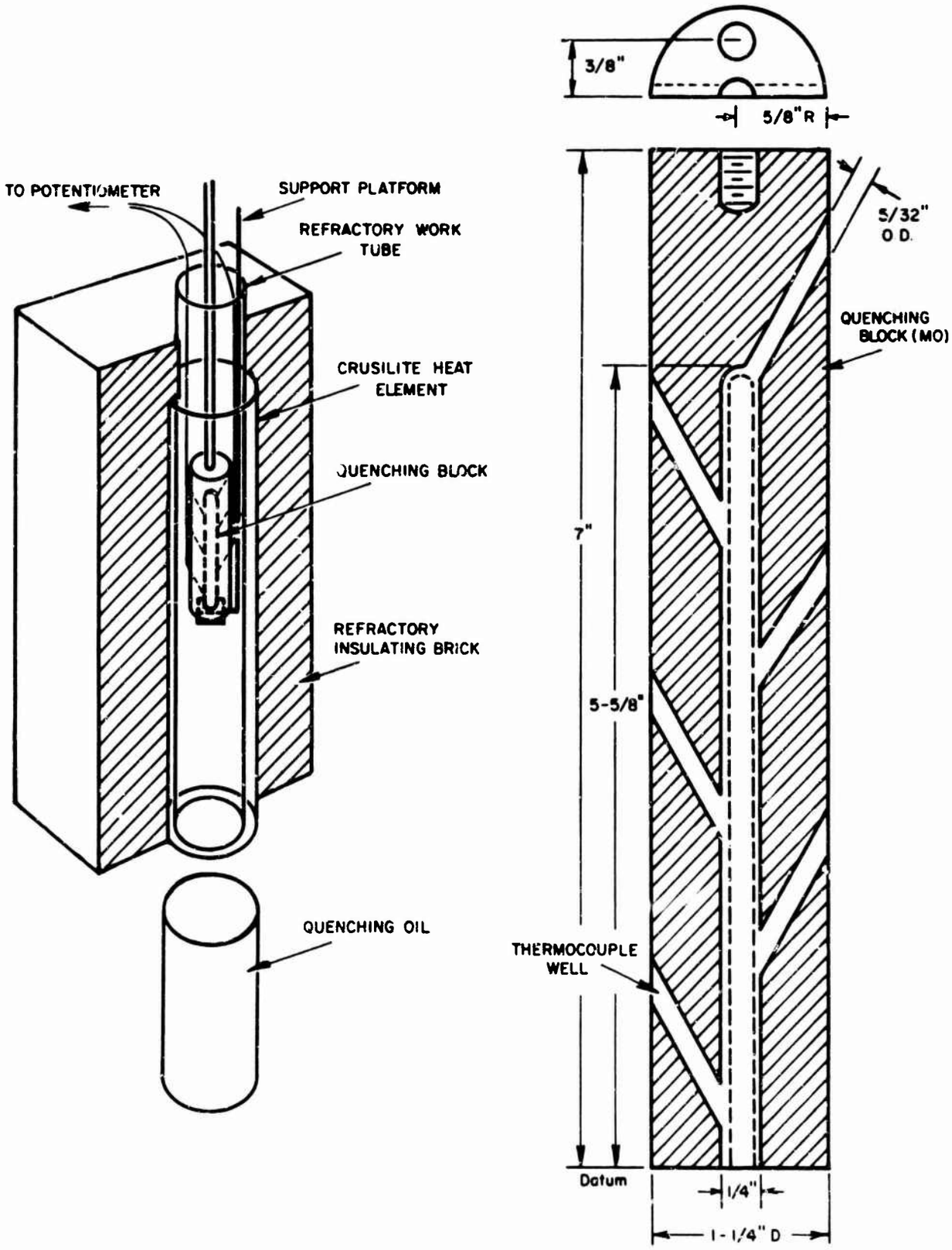

Figure 3

QUENCHING APPARATUS

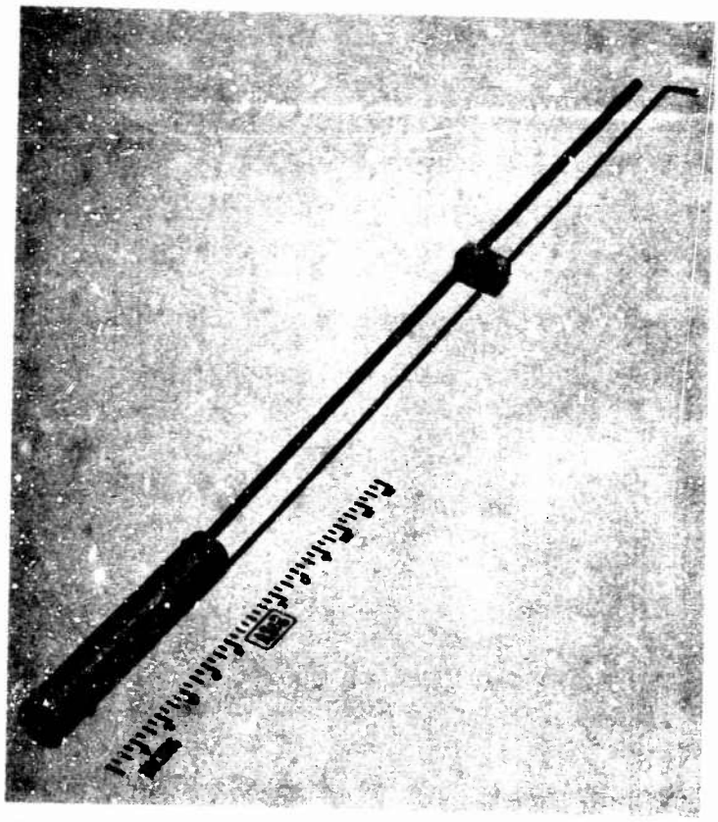

CU-013

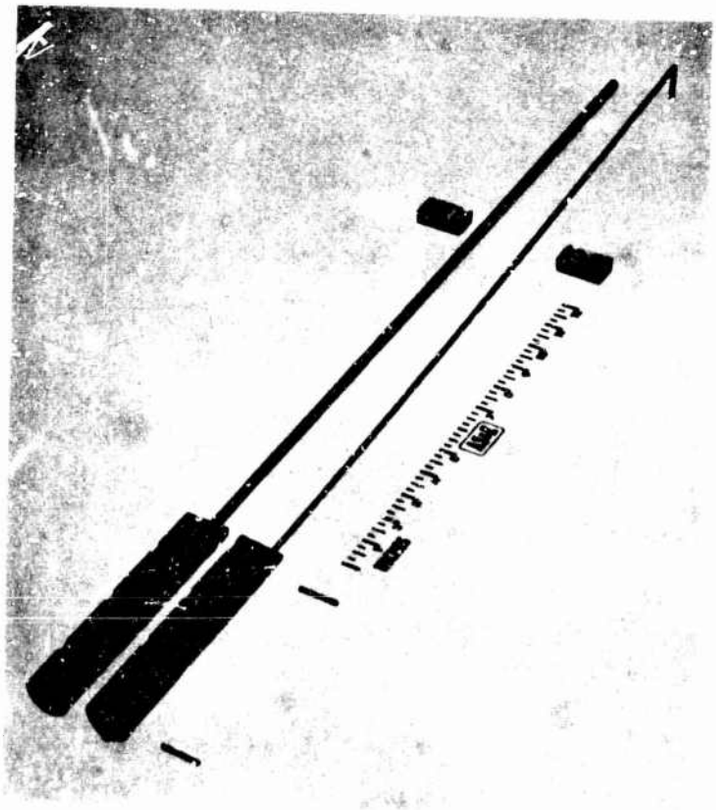

CU-014

Figure 4

the liquidus temperature of a fused melt with greater precision than is possible with cooling curves.

The liquidus temperature is determined by observing at what position melting occurs in the quenching tube. This is accomplished by establishing a known temperature gradient along the holding block by proper positioning in the furnace. Temperatures along the block are read by thermocouples. The tube containing the flux is held within the block until thermal equilibrium is established and then dropped from the block into an oil bath by turning the holding latch.

The quenched tube containing the sample is opened and the condition of the flux at various temperatures ascertained by direct observation.

The quenching tubes were originally constructed from 1/8" diameter molybdenum tubes having a 0.016" wall thickness. It was found impossible to crimp these tubes satisfactorily even at red heat without fibering and cracking the body of the tube. Later tubes were made of 1/8" platinum having 0.004" wall thickness.

3.2 Density and Coefficient of Expansion Determinations

Densities of the fused fluxes were determined using the Archimedeon method. Molybdenum bobs were immersed in the fused melts and their buoyancies measured directly with a balance. Volumes and weights of the bobs were measured at room temperature and the volumes at the temperatures of the flux estimated from the volume coefficient of expansion for molybdenum.

The density apparatus is shown in a schematic drawing in Figure 5. The molybdenum bobs are shown in Figure 6. The machined molybdenum bobs were attached to a standard Troemner chainweight specific gravity balance. The bobs were hung on molybdenum wires and immersed in the liquid flux by measuring the length of wire required to effect complete immersion in advance of the experiment. Two bobs of different sizes were used to eliminate the effects of surface

FUSED SALT DENSITY APPARATUS

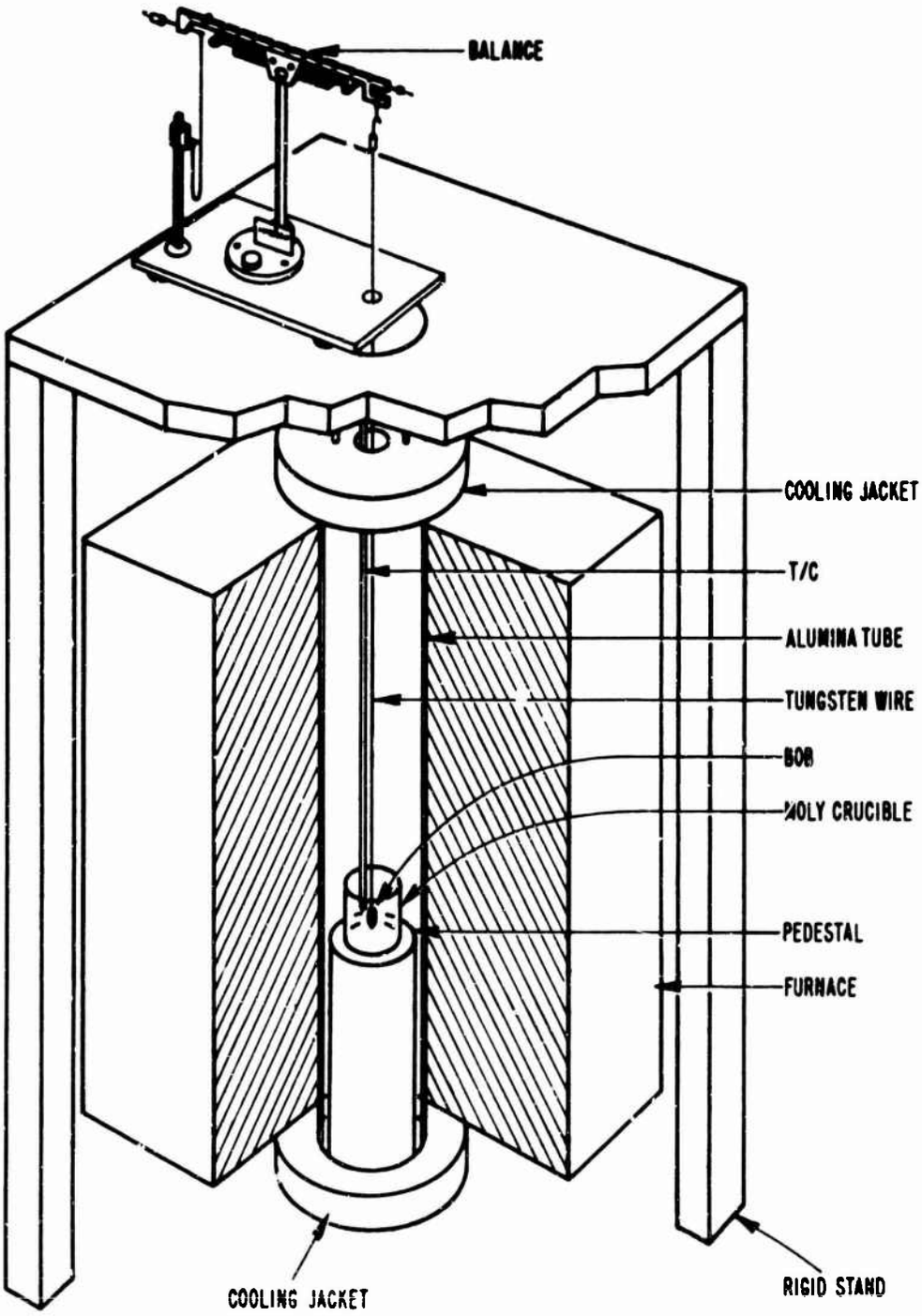

Figure 5

1872

DENSITY AND VISCOSITY BOBS

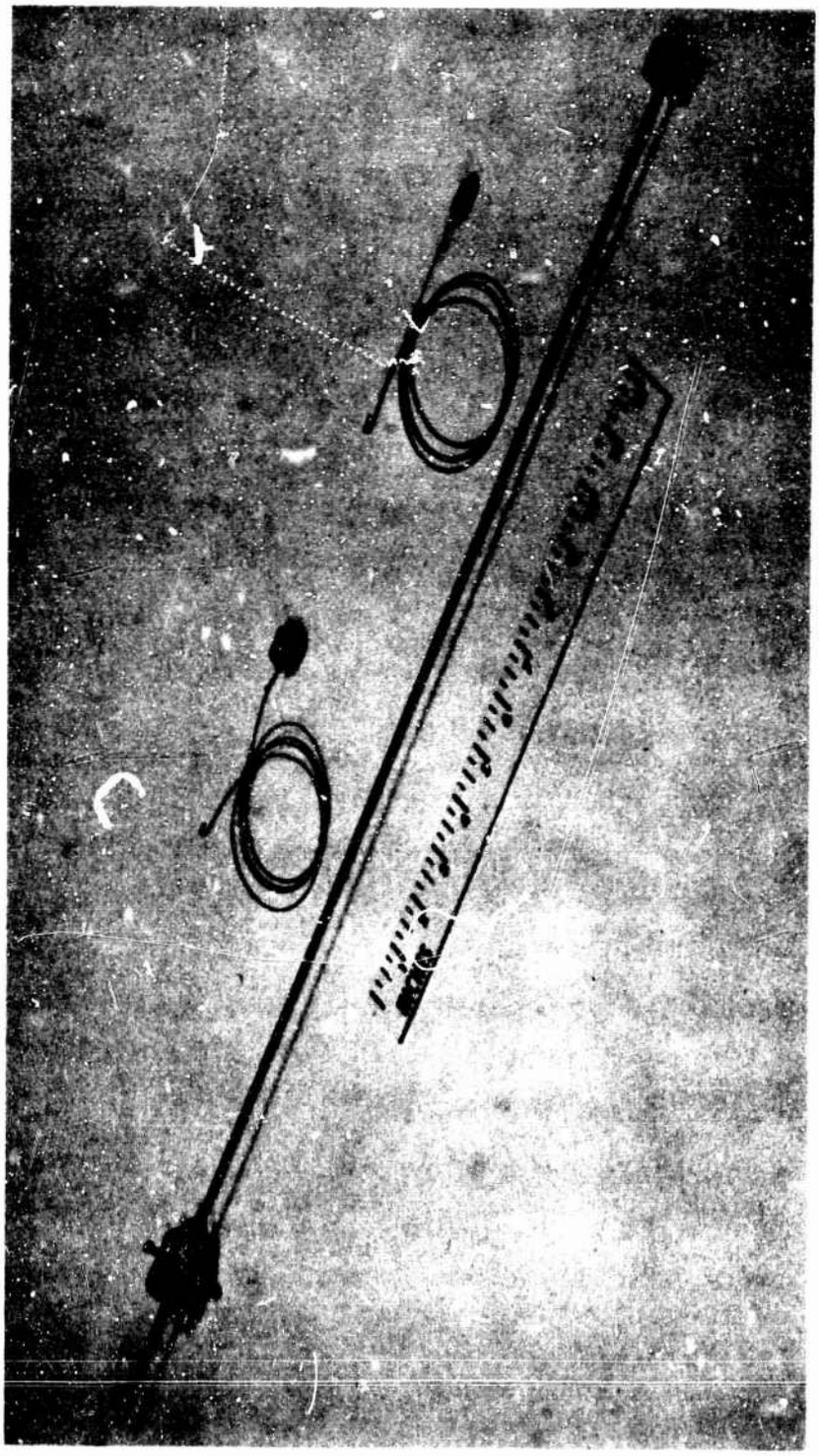

DH-007

Figure 6

tension. Measurements of the buoyancy were made at each temperature with both bobs and the density calculated from the expression of MacKenzie (Ref. 29).

$$\rho_T = \frac{B_1 - B_2}{A_T\left(V_1 - V_2\right)} \tag{57}$$

where

ρ_T is the density of the fused salt both at temperature, T

B_1 and B_2 are the buoyancies of the two bobs. The buoyancy is defined as the decrease in the measured weight of the bob on immersion in the liquid. By using two bobs of different sizes, surface tension effects of the flux upon the wire are canceled out when the two buoyancies are subtracted

V_1 and V_2 are the bob volumes at room temperature

and

A_T is the thermal expansion of the bob metal from room temperature to the fused salt temperature

The coefficients of volume expansion for the fluxes were calculated from the slope of the plot of density versus temperature using the expression

$$\frac{1}{V}\left(\frac{dV}{dt}\right) = \rho \frac{d\left(\frac{1}{\rho}\right)}{dt} \tag{43}$$

3.3 Viscosity Determinations

Fused salts generally have viscosities comparable to that of water (Ref. 3) (one centipoise). No viscosity data for the fluoride melts of interest could be found in the literature and the viscosities had to be measured.

Assuming that the viscosities of the fluoride melts were probably in the order of a few centipoises an osculating bob viscosimeter was constructed. The apparatus is shown in Figure 7. A molybdenum bob, supported on a tungsten

FUSED SALT VISCOSITY APPARATUS

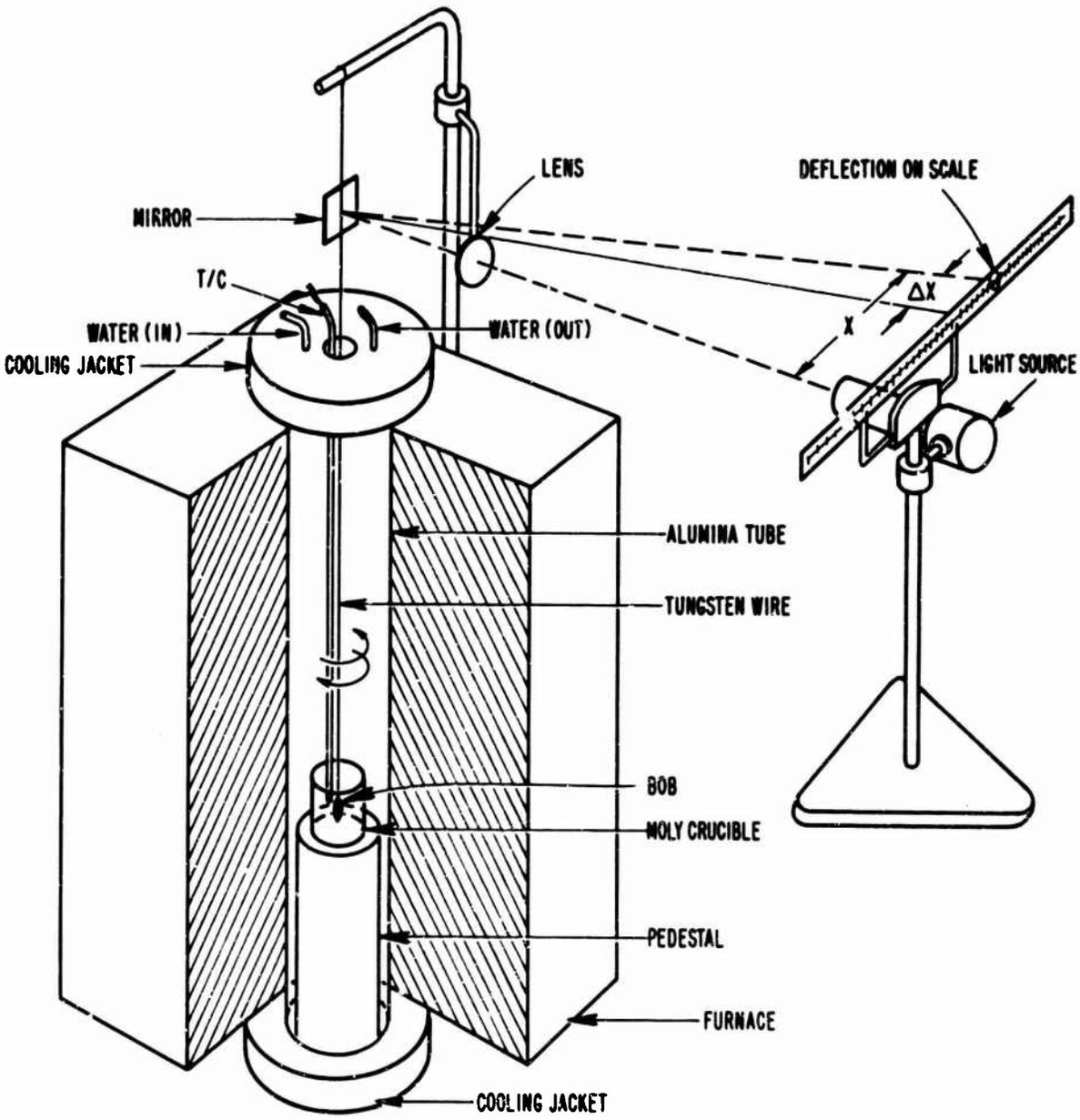

Figure 7

1572

wire, is immersed to a fixed depth in the molten salt and forced to rotate by a preliminary twist of the wire. The rotation is observed by reflecting light from a mirror attached to the wire. The amplitude of swing was recorded for a number of successive swings and the fractional decrement (x_1 / x_2) of the amplitude was computed for successive pairs of swings. The fractional decrements for a complete series of swings were averaged and the iR standard deviation computed.

A theoretical expression exists for the relationship between fractional decrements and viscosity (Ref. 30, 31). Because of the exploratory nature of the initial fused salt viscosity measurements an empirical calibration procedure was used as recommended by Yao and Kondic (Ref. 32).

The viscosity apparatus was calibrated at room temperature with solutions of glycerine and water whose viscosities are known very precisely. The calibration curve is shown in Figure 8. It can be seen that the apparatus as used had a wide dynamic range and an accuracy of $\pm$ one centipoise at the smaller viscosities.

CALIBRATION OF VISCOSIMETER

FLUID-GLYCERINE AT 27°C

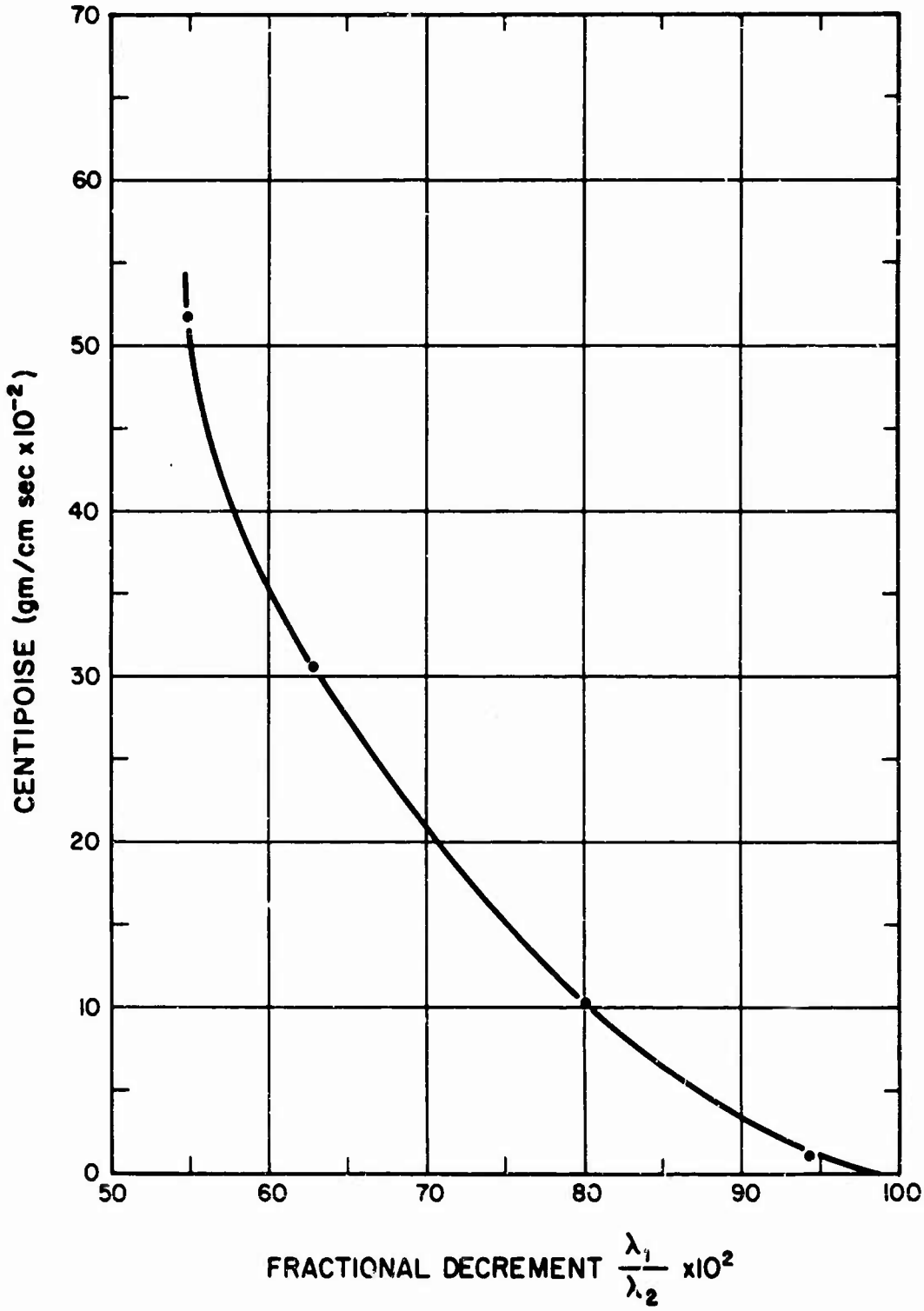

Figure 8

1572

IV. FLUX PROPERTIES

4.1 Measured Properties

4.1.1 Solubility

More than ten attempts were made to determine the solubility of aluminum oxide in the 80 mole percent LaF_3 - 20 mole percent Al_2O_3 melt using the cooling curve apparatus described in Section III. None of these experiments produced useful data. Leak tight molybdenum thermocouple sheaths were not available during the program. Tantalum, platinum, and recrystallized alundum sheaths failed to withstand the lanthanum flux long enough to show arrests or breaks in the cooling curves.

Some supplementary information about solubility was supplied to the authors by Cortland O. Dugger of AFCRL (Ref. 33) who ran different thermal analyses upon the lanthanum fluoride-aluminum oxide mixture. Figure 9 shows a differential thermal heating curve and a differential thermal cooling curve for the 62 mole percent LaF_3 - 38 mole percent Al_2O_3 mixture drawn from data of Dugger.

The solidification temperature of the melt is clearly defined by the large peaks of Figure 9 as 1424°C (heating) and 1381°C (cooling). The temperature at which aluminum oxide is truly soluble is more difficult to identify since reactions are observed in the D.T.A. plots from 1400°C to 1480°C which could be interpreted as the evidence of the true solubility point.

Pending further experimental information, the equilibrium solubility point of the 80 mole percent LaF_3 - 20 mole percent Al_2O_3 was taken as 1750°K (1477°C).

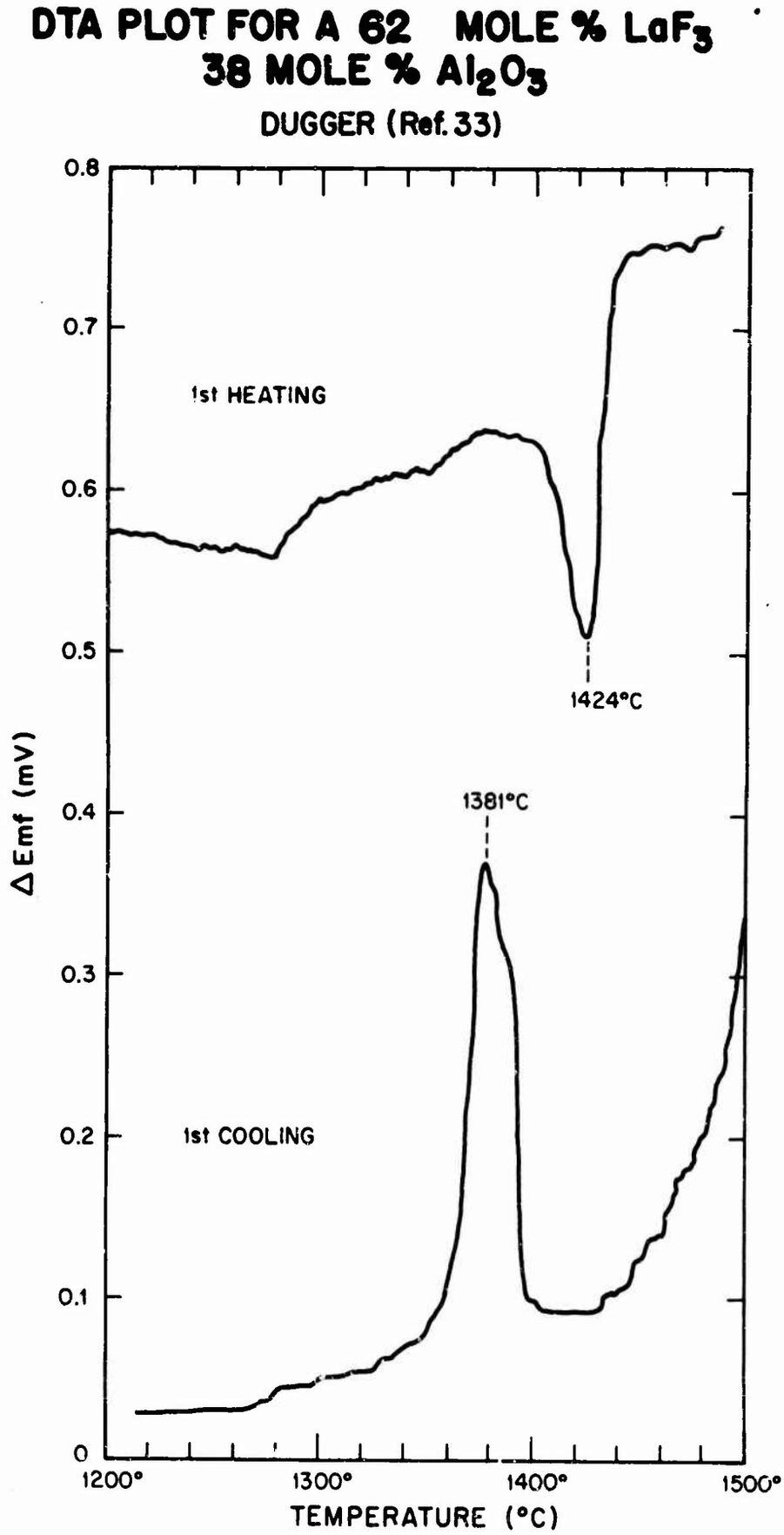

Figure 9

1572

4.1.2 Density and Coefficient of Thermal Expansion

The measured density of a 20 mole percent Al_2O_3 - 80 mole percent LaF_3 flux is shown as a function of temperature in Figure 10. The precision of the measurements is estimated to be $\pm$ 0.5 percent. These data give a value of 8.65×10^{-4} for the coefficient of volume expansion for a 20 mole percent Al_2O_3 - 80 mole percent LaF_3 flux over the temperature range from 1440°C to 1505°C.

4.1.3 Viscosity

The viscosity of a 20 mole percent Al_2O_3 - 80 mole percent LaF_3 flux between 1360°C and 1500°C is shown in Figure 11. The precision of the measurements was approximately $\pm$ 2 percent. It can be seen that the viscosity of this flux ranges from 8 to 10 centipoise. This is a factor of four greater than the viscosity of comparable chloride melts (Ref. 3, 9).

4.2 Derived Flux Properties

The extent to which the aluminum oxide molecule is dissociated in molten fluoride solvents is known only partially for cryolite (Na_3AlF_6) (Ref. 33, 34) and not at all for the fluxes of interest to the current research. In order to estimate flux properties, it has been necessary to assume something about the chemical form of the dissolved aluminum oxide molecule. Accordingly, the dissolved aluminum oxide has been assumed to exist in the fluxes of interest as spherical undissociated molecules having the formula Al_2O_3.

4.2.1 Diffusion Constant, D, and the Free Energy of Activation for Diffusion, ΔF_D

An estimate of the diffusion constant for aluminum oxide in the flux can be made using the Stokes-Einstein relation for the coefficient of diffusion. Thus,

$$D = \frac{kT}{6 \pi r \nu}$$

DENSITY OF MOLTEN MIXTURE

20 MOL % Al_2O_3 - 80 MOL % LaF_3

ρLaF_3 AT 25°C = 5.936

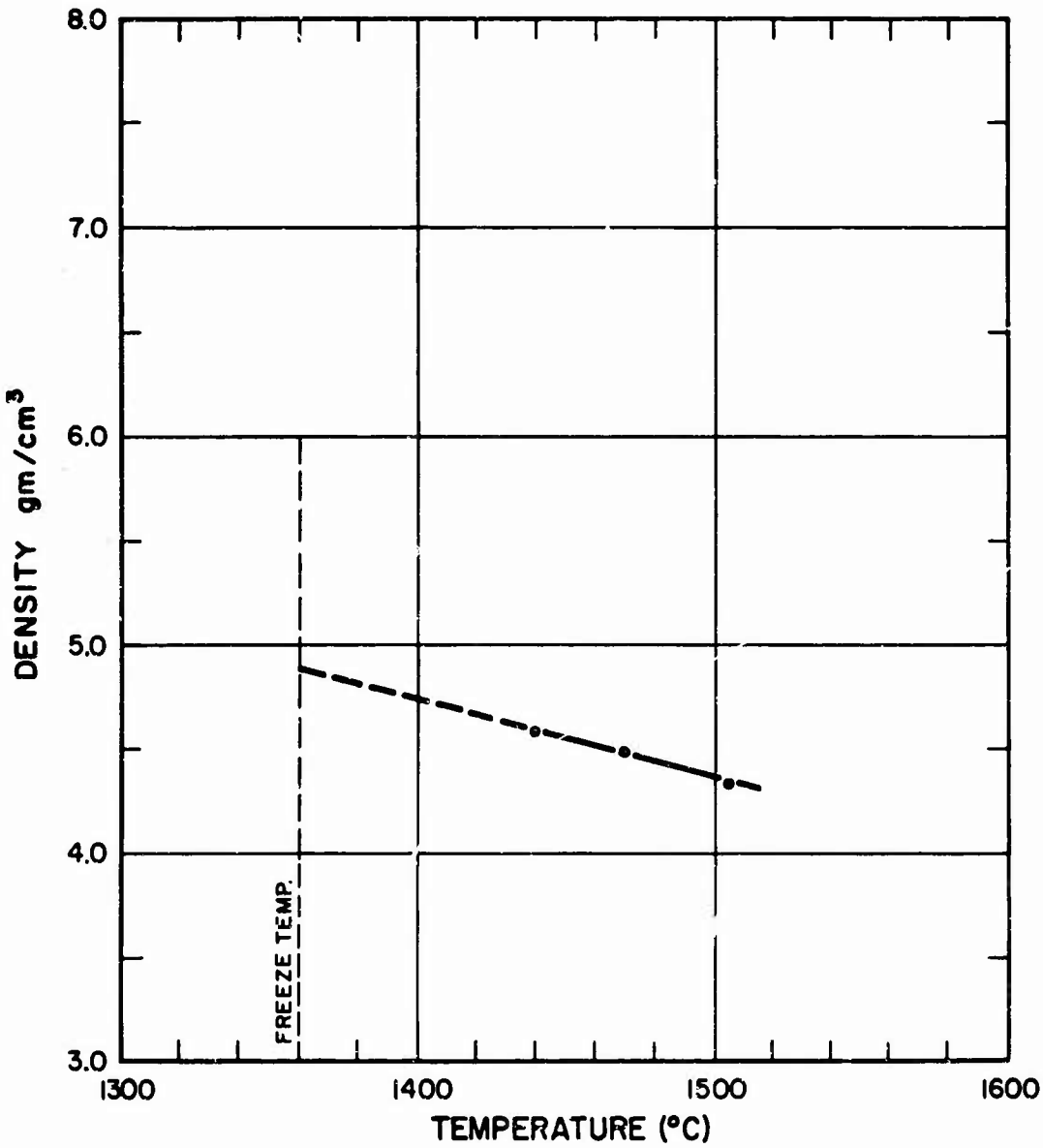

Figure 10

1572

VISCOSITY OF MOLTEN MIXTURE

20 MOL % Al_2O_3 - 80 MOL % LaF_3

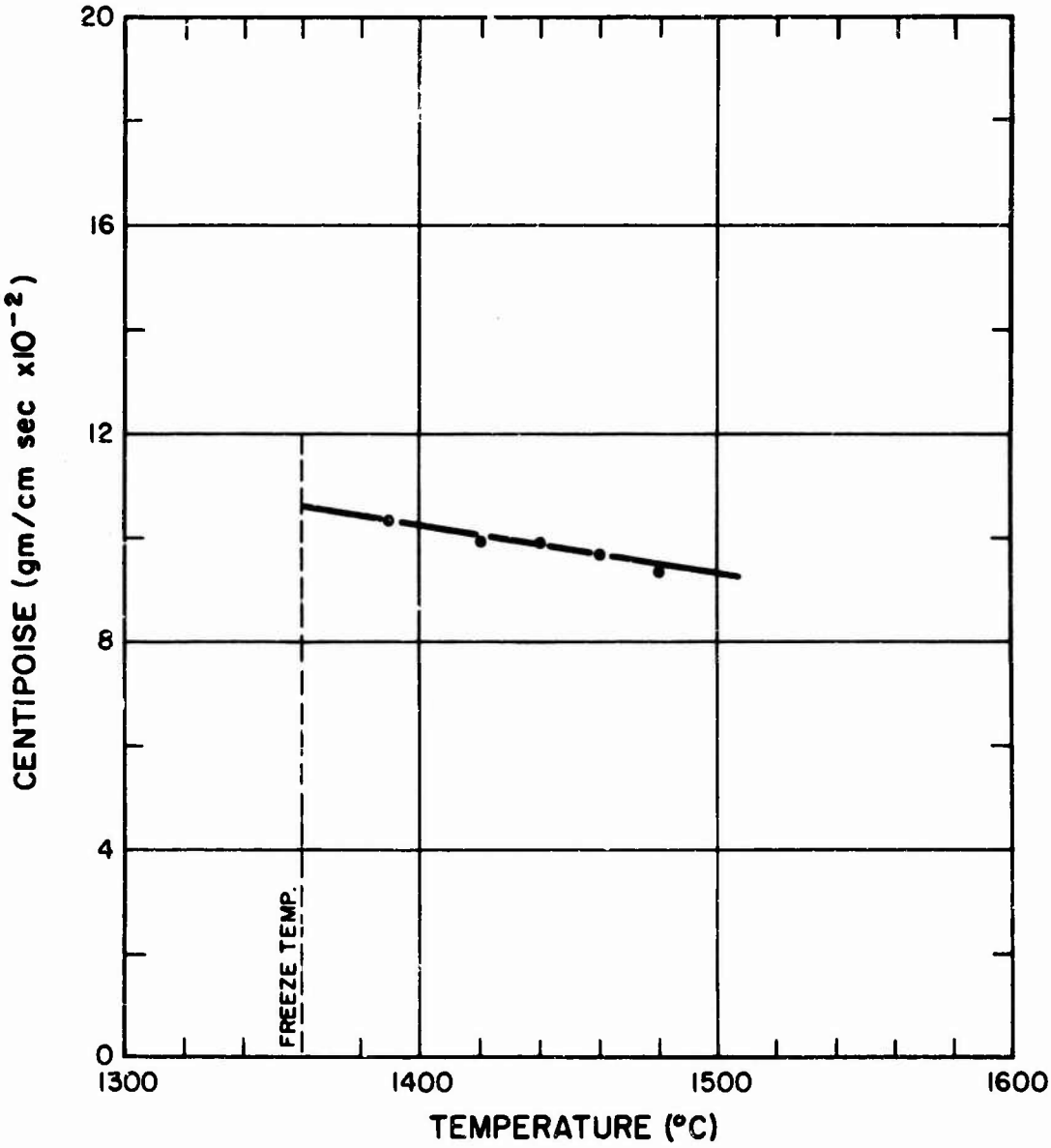

Figure 11

1572

where

D is the diffusion coefficient (cm^2/sec)

ν is the viscosity of the melt (gm/cm sec)

r is the radius of the diffusing molecule (cm)

and the other terms have been defined above.

A value for D can be estimated from the measured viscosities of the aluminum oxide, lanthanum fluoride melts using,

$$r_{Al_2O_3} = 3.48 \times 10^{-8} \text{ cm}$$

$$\nu = 9 \times 10^{-2} \text{ poises}$$

and

$$T = 1750^{\circ}K$$

$$D = 4.1 \times 10^{-6} \text{ cm}^2/\text{sec}$$

The free energy of activation for diffusion has been assumed to be approximately one-third the energy of evaporation of the solvent flux (Ref. 9). That is, if ΔF_D is the free energy of activation for diffusion,

$$\Delta F^*_D \approx \frac{\Delta E_{vap}}{3} = \frac{\Delta H_{vap} - RT}{3} \tag{29}$$

assuming that the solute ΔF^*_D is equal to the solvent ΔF^*_D.

For lanthanum fluoride,

$$\Delta F_D \approx \frac{62.0 - 5.2}{3} = 18.9 \text{ K cal/melt}$$

and the value of

$$\exp\left(-\frac{\Delta F_D}{RT}\right) = 4.43 \times 10^{-3}$$

when T is equal to $1477^{\circ}C$ ($1750^{\circ}K$).

4.2.2 Thermal Conductivity, k, and Thermal Diffusivity, K

The values of the thermal conductivity and diffusivity are needed for both crystalline aluminum oxide and the fused melt.

Values of the thermal conductivity for the corundum form of aluminum oxide are available in the desired temperature range (Ref. 11) as are values of the specific heat (Ref. 36). Values of the density can be derived from the density at room temperature (Ref. 12), and the coefficient of thermal expansion (Ref. 10). For the calculations of this report the following average values were used,

$$k = 0.02 \text{ cal/cm sec}$$

$$C = 31 \text{ cal/}^{\circ}\text{K mole} = 0.305 \text{ cal/}^{\circ}\text{K gm}$$

and the thermal diffusivity, κ =

$$\kappa = \frac{K}{\rho C}$$

was taken as,

$$\kappa = 0.016 \text{ cm}^2\text{/sec}$$

The corresponding values for molten lanthanum fluoride flux are not known. The value of k for the 20 mole percent Al_2O_3 - 80 mole percent LaF_3 flux was assumed to be equal to or less than 0.02 cal cm/sec cm^2. A value of the heat capacity of the lanthanum fluoride flux was calculated on the basis of assigning 8.0 cal/gm atom $^{\circ}$C to the liquid mixture (Ref. 36). Thus,

$$C = \frac{[0.20\,(2+1) + 0.80\,(1+3)]\,8}{0.20 \times 101.96 + 0.80 \times 195.92} \quad (\text{cal/}^{\circ}\text{C gm})$$

$$C = 0.19 \text{ cal/}^{\circ}\text{C gm}$$

and $\kappa = 0.024 \text{ cm}^2\text{/sec}$

4.3 Summary

The physical properties of aluminum oxide and the molten flux of 0.20 mole percent Al_2O_3 - 80 mole percent LaF_3 which are necessary for the estimation of crystal growing parameters are summarized in Table I.

TABLE I

SUMMARY OF PROPERTIES

Al_2O_3

Molecular weight	101.96
Volume per mole (25°)	25.5 cm^3
Volume per molecule	4.24×10^{-23} cm^3
Thermal conductivity at 1477°C	0.02 cal/cm sec
Estimated heat of fusion at 1477°C	26 K cal/mole
	0.98 K cal/cm^3
	.255 cal/gm
Density (25°C)	3.99 gm/cm^3

Flux (80 mole percent LaF_3 - 20 mole percent Al_2O_3)

Density - Figure 10	
Viscosity - Figure 11	
Thermal conductivity (assumed)	.02 cal/cm sec °C
Estimated diffusion constant for Al_2O_3 molecules in 20 - 80 flux at 1477°C	4.1×10^{-6} cm^2/sec
Estimated free energy of activation for diffusion of Al_2O_3 molecules in 20 - 80 flux at 1477°C	18.9 K cal/mole

Assumed concentrations in flux at 1750°K (1477°C)

$$c_{Al_2O_3} = 0.005 \text{ moles/cm}^3$$

$$c_{LaF_3} = 0.020 \text{ moles/cm}^3$$

$$c_T = 0.025 \text{ moles/cm}^3$$

V. DISCUSSION

5.1 Introduction

The problems which are met in attempting to predict the sizes, shapes, temperature gradients, and cooling rates needed for the growth of sapphire and ruby from fused salt solvents were discussed in Section II. Equations which present formal solutions to certain aspects of these problems were given in that section. It was stated there that the unique characteristic of a fused salt solvent with respect to crystal growth arose from the high temperatures required for liquidity. These temperatures cause the supersaturation ratio (c/c_o) which is produced by a given undercooling to be much smaller than that which would be produced by the same undercooling near room temperature. One consequence of this relative reduction is that growth phenomena which depend on the difference between supersaturation and equilibrium solubilities, ($c-c_o$), are retarded more in fused salt systems than in equivalent aqueous systems. The higher temperatures required for fused salt crystal growth affect other aspects of the growth process in less directly recognizable ways. When the equations which predict the crystal growth rates and the condition for homogeneous nucleation were applied to the precipitation of aluminum oxide (sapphire and ruby) from fused salt solvents in Section II, it was found that (1) the screw dislocation mode of growth was probably the fastest process for the growth of large crystals of aluminum oxide when undercooling was moderate, (2) homogeneous nucleation of aluminum oxide nuclei probably did not occur for undercoolings of at least 20°C at flux temperatures of 1477°C, and (3) heat does not normally control the growth of aluminum oxide crystals from a flux although it can do so under special experimental conditions.

In the present section, the equations which predict the proper experimental conditions for the growth of sapphire and ruby crystals are applied to the lanthanum fluoride-aluminum oxide flux whose properties are given in Section IV. The results and conclusions of Section II are used directly in making these estimates. It will be seen that the reduction in the magnitude of the supersaturation ratio (c/c_o), and the consequent reduction in quantity $(c-c_o)$ becomes highly significant to the growth of crystals without solvent inclusions.

The problem of estimating crystal growing conditions is approached on the basis of how the supersaturation is generated, whether by slow cooling, or by a thermal gradient. If slow cooling is used, an estimate of the allowed overall cooling rate for the system is required. If a thermal gradient is used, estimates of the temperature differences and the distances across which these temperatures occur are needed.

In making estimates of crystal growth conditions, it is necessary to assume that growth will occur upon a seed crystal and that spontaneous nucleation can be avoided. This is a reasonable assumption in view of the conclusions of Section II. The manner in which the solution is caused to flow across the face of the seed crystal must also be defined. Forced stirring must be used for most fused salt solvents. It is clear from the discussion of Section 2.5 and 2.6, that diffusion processes are not sufficient to effect solute transfer in the growth of large perfect crystals from fused salts. It will also be clear from the development of the following sections that convection is also not sufficient to effect proper solute transfer. The information about forced stirring that is needed is the required stirring rate and the radius of the crystal support.

The results of the discussions and estimates for the lanthanum fluoride-aluminum oxide system are also used as the basis for a more general analysis of flux requirements. The interaction between the crystal growth system

requirements and the fused salt solution properties is shown and the solution properties which are important to maximizing crystal quality are identified.

5.2 The Generation of Supersaturation for Crystal Growth from the Lanthanum Fluoride-Aluminum Oxide Flux

Controlled crystal growth by either the slow cooling or the thermal gradient method requires information about the rate of crystal growth and the change of the supersaturation with temperature. For the purposes of estimates upon which to base crystal growth experiments, the crystal growth rate for sapphire and ruby precipitating from a lanthanum fluoride flux upon a seed crystal may be assumed to be governed by the screw dislocation mode of crystal growth. The temperature dependence of the supersaturation is assumed to be the same as the temperature dependence of the equilibrium solubility. When this is not known, the change of solubility with temperature is estimated by means of a Clapeyron type equation such as equation (6).

5.2.1 Growth of Al_2O_3 by Slow Cooling of the Flux

The desired cooling rate for the slow cooling method of crystal growth can be calculated for the LaF_3 - Al_2O_3 flux from equation (2). The expression for dT/dt is:

$$\frac{dT}{dt} = \frac{dr}{dt} \frac{A \rho_c \rho_s}{M F_w \frac{dc_o}{dT}} \tag{59}$$

Where dr/dt refers to the absolute crystal growth rate, A is the area of the crystal face, ρ_c, the density of the crystal, ρ_s, the density of the solution, M, the total mass of the solution, F_w, the molecular weight of the solute, and dc_o/dT is the change of solute solubility with temperature. These terms have been defined in Section II.

The value of dc_o/dT, the change in solubility with temperature, may be estimated from equation (4). In terms of the concentrations,

$$\frac{dX}{dT} = \frac{dc_{Al_2O_3}}{dT} \frac{c_{LaF_3}}{c_T^2} \tag{60}$$

where

X is the mole fraction of Al_2O_3 in the melt

and $c_{Al_2O_3}$, c_{LaF_3}, c_T, are the moles per unit volume in the melt for aluminum oxide, lanthanum fluoride, and the sum of the moles of aluminum oxide and lanthanum fluoride.

Substituting this expression in equation (6) and using,

$$X = \frac{c_{Al_2O_3}}{c_T} \tag{61}$$

an expression for dc/dT is obtained. This is,

$$\frac{dc_{Al_2O_3}}{dT} = \frac{c_{Al_2O_3}}{c_{LaF_3}} c_T \frac{\Delta H_f}{RT^2} \tag{62}$$

Using the expression for $dc_{Al_2O_3}/dT$ in equation (59) for the desired rate of cooling, we have

$$\frac{dT}{dt} = \frac{dr}{dt} \frac{A \rho_c \rho_s \; c_{LaF_3} \; RT^2}{M F_w \; c_T \; c_{Al_2O_3} \; \Delta H_f} \tag{63}$$

using the values,

$F_{w_{Al_2O_3}} = 101.96$

$\rho_c = 3.99$

ρ_s at $1477^oC = 4.44$

$c_{Al_2O_3}$ (20 mole percent Al_2O_3 - 80 mole percent LaF_3) = 0.005 moles/cm^3

c_{LaF_3} (20 mole percent Al_2O_3 - 80 mole percent LaF_3) = 0.020 moles/cm^3

c_T (20 mole percent Al_2O_3 - 80 mole percent LaF_3) = 0.025 moles/cm^3

$R = 1.99$ cal/mole ^oC

$T = 1750^oK$

$\Delta H_f = 26,000$ cal/mole

$$\frac{dT}{dt} = 6550 \frac{dr}{dt} \frac{A}{M} \tag{64}$$

If the value of dr/dt for a screw dislocation growth process of growth on aluminum oxide at 1477^oC is used, corrected by the change in the diffusion constant from the estimated 10^{-5} cm to the calculated value of Section IV of 0.41×10^{-5} cm^2/sec, equation (64) becomes

$$\frac{dT}{dt} = \frac{71}{k} g \Delta T^2 \frac{A}{M} \quad (^oC/hr) \tag{65}$$

where k, g, ΔT, A and M have been defined previously.

If a crucible size equivalent to the standard molybdenum crucible is assumed (1 1/2" diameter x 2 5/8" height), the value of M is 338 gms when the crucible is completely filled with the 20 mole percent Al_2O_3 - 80 mole percent LaF_3 flux at 1477^oC. A larger crucible, 4" diameter x 6" height, would hold a melt of 5500 gms of the same 20 - 80 flux at 1477^oC. Substituting these values in equation (1), the allowed values of the cooling rate becomes,

$$\frac{dT}{dt} = 0.209 \frac{g}{k} A \Delta T^2 \, (^{\circ}C/hr) \, (1.5'' \times 2\ 5/8'')_{\text{crucible}} \tag{66}$$

$$\frac{dT}{dt} = 0.0129 \frac{g}{k} A \Delta T^2 \, (^{\circ}C/hr) \, (4'' \times 6'')_{\text{crucible}} \tag{67}$$

The probable magnitude of g has been discussed in Section 2.3 where it was shown that at the high temperatures of a fused salt growth process (1477°C), g, which at room temperature can be very small, tends to increase in value. g is believed to range from 0.30 to 1.00 at 1477°C.

The magnitude of k, the ratio of the interfacial energy of the aluminum oxide crystal in the flux to the surface energy of an aluminum oxide crystal at the same temperature in vacuum or an inert atmosphere, is believed to range from 0.1 to 1.0.

The magnitude of the ratio g/k can range from 0.3 to 10 or a factor of 30.

The direct dependence of the cooling rate on the available growth area, A, means that the cooling rate should be much slower at the start of a slow cooling experiment if a seed crystal is not used. Assuming a square face 1 mm x 1 mm the cooling rate should be one hundredth (0.01) as great as that for a larger seed crystal with a face 1 cm x 1 cm.

For a screw dislocation growth process, the rate of cooling depends on the square of the undercooling which can be maintained near the growing crystal. In the derivation of equation (2) and (59), it is assumed that the precipitation of solute by cooling exactly equals the rate at which solute is incorporated into the crystal. The derivation assumed nothing about the undercooling, ΔT, which could be maintained in a crucible. The analyses of Section 2.4 show that an undercooling of 20°C should not cause a high rate of spontaneous nucleation

for the 20 mole percent Al_2O_3 - 80 mole percent LaF_3 flux near 1450°C. However, other modes of growth may compete with the screw dislocation process if undercoolings greater than 5°C are maintained.

Assuming that an undercooling of 5°C can be maintained, a seed crystal with a 1 cm^2 surface area is used, equation (65) becomes

$$\frac{dT}{dt} = 5.22 \frac{g}{k} \left(^{\circ}C/hr\right) \underset{\text{crucible}}{(1\ 1/2'' \times 2\ 5/8'')} \tag{68}$$

$$\frac{dT}{dt} = 0.32 \frac{g}{k} \left(^{\circ}C/hr\right) \underset{\text{crucible}}{(4'' \times 6'')} \tag{69}$$

where g/k may vary from 0.3 to 10.

5.2.2 Growth of Al_2O_3 from the Flux by the Thermal Gradient Method

The thermal gradient method of creating the supersaturation necessary for crystal growth operates by transferring solution saturated with solute at temperature, T_1, to a region at a lower temperature, T_2. The transfer can be effected by external forces such as stirrers or pumps, by the processes of natural convection, or by a combination of stirring and convection. The liquid which arrives in the lower temperature region can arrive there at the temperature, T_1 and solute concentration, c_o, or at the temperature, T_2 and a supersaturated solute concentration (c equal to c_o at T_1) or at an intermediate temperature and/or solute concentration.

In using the thermal gradient method, the crystal grower must decide upon the growth temperature, T_2, and the temperature drop, $T_1 - T_2$. The criterion for making this choice is derived by equating the rate of solute deposition upon the growing crystal face to the rate of introducing precipitable

solute into the growth zone. The precipitable solute is supplied from supersaturated solution and the technique of crystal growth must ensure that transfer through the temperature drop actually ensures a state of supersaturation at the crystal.

The defining equation for the thermal gradient method of generating supersaturation in a fused salt is

$$\left(\frac{dr}{dt}\right)_{tg} = \frac{m}{A \rho_c \rho_s} \frac{\Delta c_o}{\Delta T} \Delta T \; F_w \tag{5}$$

where

m is the mass of melt swept by the crystal face per hour

Δc_o is the finite change in solubility caused by traversing the temperature drop, ΔT, where $\Delta T = T_1 - T_2$

and the other terms have been defined in 5.1.

The information which is needed to make useful estimates about the thermal gradient method is: (1) the amount of supersaturation produced by the movement through the temperature drop, and (2) the rate at which solution is transferred. Since this transfer often occurs by the processes of natural convection, one major problem is to estimate the solution flow which is caused by the temperature difference itself.

When solubility data are not available, the term $\Delta c_o / \Delta T$ can be estimated by assuming it is equal to dc_o/dT. An approximate expression for this quantity has been given for aluminum oxide in the lanthanum fluoride melt in Section 5.2.1. It is,

$$\frac{dc_{o\,Al_2O_3}}{dT} = \frac{c_{Al_2O_3}}{c_{LaF_3}} c_T \frac{\Delta H_f}{RT^2} \tag{62}$$

Substituting the values for $c_{Al_2O_3}$, c_{LaF_3}, c_T, ΔH_f, and T given in Section 5.2.1 in this expression, the value of

$$\frac{\Delta c_{oAl_2O_3}}{\Delta T} \cong c_{oAl_2O_3} \quad 5.32 \times 10^{-3} \text{ (at } 1477^{o}\text{C)}$$

or, the fractional amount of supersaturation produced per degree is

$$\frac{\dfrac{\Delta c_{oAl_2O_3}}{\Delta T}}{c_{oAl_2O_3}} \cong 5.32 \times 10^{-3}$$

or about 0.5% per ^{o}C.

In attempting to estimate proper temperatures and temperature drops for growth from the flux, a number of assumptions must be made. It must be assumed that the solution traversing the temperature drop is at thermal equilibrium at temperature, T_1 and at temperature, T_2, but that solubility equilibrium is achieved only at temperature T_1. The total solubility of the solute is assumed to remain constant as the solution temperature drops to, T_2, so that cooled solution is supersaturated at a known supersaturation. In practical work, the success or failure of a thermal gradient growth experiment depends to a large extent on the precision with which these conditions can be met and baffling arrangements (Ref. 40) are often used to achieve the desired equilibria.

In making estimates, the crystal grower must also decide how solution transfer across the thermal gradient is to be accomplished, whether by stirring or natural convection. If either stirring or natural convection is employed, it is usually assumed that the cooler temperature, T_2 is at a position above temperature, T_1.

When stirring is used to transfer solution from T_1 to T_2, it is assumed that the stirrer is equipped with blades that provide a propeller like action, or that baffles within the container convert rotary solution flow into vertical flow. It is practically impossible to estimate the velocity of vertical solution flow under these conditions by calculation. It is fairly straightforward to estimate solution flow from room temperature experiments with transparent apparatus using Reynold's number analyses to predict the behavior of the fused salts at high temperatures. Consequently, estimates of required temperature drops for the thermal gradient method must be given in terms of an experimentally determined transfer velocity when stirring is used.

If the mass of melt swept by the crystal face per hour, m, is moved by stirring, a relationship between T_2, T_1 and the velocity can be established from the equation

$$m = v \rho_s A \tag{70}$$

where

v is the velocity of solution flow over the crystal face

and

ρ_s is the solution density at the temperature of the solution adjacent to the crystal.

If this expression is substituted into equation (5), this becomes

$$\left(\frac{dr}{dt}\right)_{tg} = \frac{v}{\rho_c} \frac{\Delta c_o}{\Delta T} \Delta T \; F_w \tag{71}$$

If the value of $\Delta c_o/\Delta T$ is assumed equal to that for dc_o/dT and the approximate relation is used, equation (71) becomes

$$\left.\frac{dr}{dt}\right|_{tg} = \frac{v}{\rho_c} \frac{c_{Al_2O_3}\, c_T}{c_{LaF_3}} \frac{\Delta H_f}{RT^2} \Delta T\, F_w \tag{72}$$

Using the value of dr/dt given in Section 2.3 for screw dislocation growth on aluminum oxide corrected for the change in the diffusion constant, this expression reduces to

$$\Delta T = v \frac{1}{2.15} \frac{k}{g} \frac{c_T}{c_{LaF_3}} \frac{\Delta H_f F_w}{RT^2} \tag{73}$$

If the value of c_T/c_{LaF_3} is taken as 1/0.8, T as 1750°K, R as 1.99 cal/mole °K, ΔH_f as 26,000, F_{sw} as 101.96, this expression reduces to

$$T_1 - T_2 = \Delta T = 0.9 \times 10^3\, v \frac{k}{g} \tag{74}$$

where v the velocity of solution flow is cm/sec, ΔT in °C and a screw dislocation mode of growth has been assumed.

Equation (74) predicts the desired temperature difference should be directly proportional to the velocity of solution flow. This is primarily because of the screw dislocation growth mode which predicts growth rate as proportional to the square of the undercooling.

When crystal growth is attempted with a thermal gradient method of inducing supersaturation using stirring to effect solution flow, velocities of solution flow greater than those required for a given temperature drop will result in unused solution being circulated back to the hotter zone. If velocities are less than those required by equation (74), growth will be slower than is proper and a "starvation" effect may occur at the crystal face with solvent inclusions.

When natural convection is used to accomplish transfer across the temperature drop, calculated estimates of the velocity of fluid flow may be uncertain by as much as a factor of ten. Relations which permit estimates of

convective flow are generally not available for special geometrical shapes in the growing zone or do not consider the effects of stirring. Nevertheless, estimates of convective flow are useful in establishing working temperature drops and showing the approximate fluid velocities that may be expected.

If the mass of melt swept by the crystal face per hour, m, is moved by natural convection, it is necessary to first establish whether natural convection can take place before estimates of the flow can be made.

The condition which relates the onset of convective flow to the temperature drop across a horizontal liquid zone in the growth crucible was given in Section 2.5 for a static liquid without rotation. This is,

$$a L^3 \theta > 1108 \tag{75}$$

where

a is the convective modulus of the liquid

L is the thickness of the horizontal liquid zone

and

θ is the temperature difference between the top and bottom of the liquid layer

If the value of the solution constants are taken as

$$\rho = 4.44 \text{ gm/cm}^3$$
$$\mu = 9.8 \times 10^{-2} \text{ gm/cm sec}$$
$$K = 0.02 \text{ cal cm/sec cm}^2\ {}^{\circ}\text{K}$$
$$\beta = 8.65 \times 10^{-4} / {}^{\circ}\text{K}$$

The value of c_p for the 80 mole percent LaF_3 - 20 mole percent Al_2O_3 solution is computed from the expression,

$$c_p = \frac{[0.20\ (2 + 3) + 0.80\ (1 + 3)\ ]\ 8}{0.20 \times 101.96 + 0.80 \times 195.92}$$

as,

$$c_p = 0.19 \text{ cal/gm}^{\circ}\text{K}$$

and g is taken as 980.665 cm/sec^2.

The value of the convective modulus, a, which is given by the expression

$$a = \frac{\rho^2 c_p g_1 \beta}{\mu K} \tag{46}$$

is computed to be

$$a = 1620 \text{ cm}^{-3} \, {}^{\circ}\text{C}^{-1}$$

Therefore, a liquid depth, L, of one centimeter and a temperature difference, θ, of 1°C should be sufficient to ensure the establishment of convective flow when there is no rotation in the liquid.

Having determined the minimum conditions necessary for the establishment of natural convective flow, the magnitude of the convective flow may be estimated from equations (53) and (55).

$$V_{av} \text{ (gm/cm}^2\text{ sec)} = \frac{K}{L c_p} \left[0.208 \left(L^3 a\theta \right)^{1/4} - 1 \right]$$

or

$$v_{av} \text{ (cm/sec)} = \frac{V_{av}}{\rho_s} \text{ (gm/cm}^2\text{ sec)} = \frac{K}{\rho_s \; L c_p} \left[0.208 \left(L^3 a\theta \right)^{1/4} - 1 \right] \tag{76}$$

The average convective flow created by a 20°C temperature drop in a crucible without stirring has been estimated for the 80 mole percent LaF_3 - 20 mole percent Al_2O_3 solution at 1450°C for two crucible depths. One, a depth of 2 1/2" corresponds to the probable depth a andard molybdenum 1 1/2" diameter x 2 5/8" crucible might be filled. The other depth 5" corresponds to the depth a standard 4" diameter x 6" crucible might be filled. The results

for a 20°C temperature difference between the bottom and top of the liquid layers are,

$$\text{2 1/2" depth} \quad V_{av} = 0.17 \text{ gm/sec cm}^2 \approx 0.04 \text{ cm/sec}$$

$$\text{5" depth} \quad V_{av} = 0.15 \text{ gm/sec cm}^2 \approx 0.03 \text{ cm/sec}$$

The estimates of convective flow are given first in terms of gm sol/ cm^2 sec and then converted to cm/sec because natural convective flow between horizontal layers tends to occur in cells spread uniformly across the horizontal areas. Ascending and descending streams are grouped together in each cell. The actual velocity of an ascending or descending stream may vary over the cell so that the values of velocity given are averages calculated from the average mass flow. These values are for an essentially static system without stirring.

A 20°C difference for $T_1 - T_2$ was chosen for the calculation since this is a temperature difference which is conveniently established experimentally at temperatures of 1400°C to 1500°C. The values of average convective fluid velocity estimated for the 20°C drop are small. It can be shown that an even smaller temperature difference is sufficient to provide convective flow which satisfies the screw dislocation growth rate.

If a screw dislocation mode of growth is assumed and the rate for this mode as given by equation (9) is substituted for $(dr/dt)_{tg}$ in the defining equation for the thermal gradient method, the result for a $LaF_3 - Al_2O_3$ flux solution is,

$$\Delta T = \frac{20\,m}{A} \; \frac{1}{\rho_c \rho_s} \; \frac{c_T}{c_{LaF_3}} \; \frac{F_w \; \sigma}{D \; g \; \Delta S} \tag{77}$$

Using the expression for m of,

$$m = \frac{K}{L\,c_p}\left[0.208\left(L^3 a\,\Delta T\right)^{1/4} - 1\right]$$

Equation (77) can be solved by trial and error.

In the trial and error solution, the value of ρ, the interfacial energy of aluminum oxide in the flux is replaced with the product, $k\,\sigma_o$, where σ_o is the value of the interfacial energy of aluminum oxide in vacuum.

The solution for ΔT depends on the values chosen for k, g, and A. If the ratio k/gA equals unity, a temperature difference of $5^{\circ}C$ across either the 2 1/2" or 5" depth will provide sufficient convective flow to satisfy the screw dislocation mode of growth provided there is no stirring or forced rotation of the liquid.

In practice, rotational stirring is essential as will be shown in the following section. This type of stirring is needed not to effect transfer of solution from T_1 to T_2, but to ensure that the flow of liquid past the growing crystal face is rapid enough to prevent solvent inclusions. Temperature differences even smaller than $5^{\circ}C$ may be required under these conditions because, as will be shown, restrictions upon the allowed undercooling are introduced when conditions are adjusted to prevent solvent inclusion during growth.

5.3 The Prevention of Solvent Inclusions

The only microscopic crystal defects for which the conditions of formation are described by a formal relationship involving growth and solution properties are solvent inclusions. These are formed when solution flowing across a growing crystal face becomes depleted of its supersaturation.

Two crystalline dimensions must be considered in estimating the size of crystals which may be grown without inclusions. The first is the length of crystal face parallel to the flow of solution. The second is the thickness of the crystal perpendicular to the solution flow. While only the length of a perfect crystal face which can be grown parallel to the solution flow is treated by the theory, the face perpendicular to the flow, the thickness, is of great practical interest, for this dimension determines the total duration of a crystal growth experiment.

The length of crystal face that may be grown without solvent inclusions may be estimated by Carlson's equation. This equation relates the rate of solute deposition on a flat plate to the velocity and supersaturation of the solution flowing over it. The rate of deposition is constant over the surface but the supersaturation of the solution changes as solute is deposited. The length of crystal that can be formed without inclusions under these conditions is

$$X_s = \frac{0.214\, vD \left(c - c_o\right)^2}{P_d^{1/3} \left(\frac{\rho_c}{F_{sw}} \frac{dr}{dt}\right)^2} \tag{56}$$

where

v	is the solution velocity (cm/sec)
D	is the diffusion constant (cm^2/sec)
c	is the supersaturation concentration away from the plate (moles/cm^3)
c_o	is the equilibrium solubility (moles/cm^3)
P_d	is the dimensionless Schmidt number, $P_d = \frac{\mu}{\rho_s D}$
	μ is the fluid viscosity (gm/cm^3), and ρ_s is the fluid density (gm/cm^3)

ρ_c is the crystal density (gm/cm^3)

and

$\frac{dr}{dt}$ is the rate of advance of the crystal face (cm/sec)

The product $(\rho/F_{sw})\, dr/dt$ is the growth rate in the dimensions of gm moles/cm^3. If dr/dt is assumed to be determined by the screw dislocation growth rate and the increment of supersolubility is expressed in the approximate form,

$$c - c_o \approx \frac{c_o \, \Delta S \, \Delta T}{RT} \tag{78}$$

Then the expression for X_s becomes

$$X_s = \frac{85.5\, \sigma^2 \, v \, F_{sw}^{\;2} \exp\left(-\frac{2\, \Delta S\, \Delta T}{RT}\right)}{P_d^{\;1/3} D \rho_c^2 g^2 \, \Delta S^2 \, \Delta T^2} \tag{79}$$

From equation (56) it can be seen that the smaller the growth rate, dr/dt, the longer the crystal face which can be grown without inclusions. If the time for growth is considered inversely proportional to the rate at which the crystal face advances, dr/dt, the length of the crystal parallel to the flow which can be grown without inclusion is proportional to the square of this time. Consequently, for a given desired crystal thickness, the total duration of the growth period increases by the square root of the length of the crystal face.

In the alternate formulation of equation (56), the dependence on the growth rate becomes a dependence on the inverse square of the undercooling, i.e., the greater the undercooling, ΔT, the shorter the crystal face that can be grown. Equation (79) also shows the inverse relationship of crystal length with the diffusion constant. Small diffusion constants increase crystal perfection.

The conditions which are required to produce crystal faces of aluminum oxide free from solvent inclusions when using the 80 mole percent LaF_3 - 20 mole percent Al_2O_3 flux can be estimated from equation (79). In the estimates a temperature of 1477°C (1750°K) has been assumed.

For a $1^{o}C$ undercooling, c_o assumed equal to 0.00512 moles Al_2O_3/cm^3, a screw dislocation mode of growth, and the values of μ, ρ, and D of Section 4.3 a value of X_s is computed equal to,

$$X_s = 1.7 \times 10^{-3} \text{ v (cm)} \tag{80}$$

If the same calculation is repeated for a $5^{o}C$ undercooling, the value of X_s becomes,

$$X_s = 6.8 \times 10^{-5} \text{ v (cm)} \tag{81}$$

The solution velocities which are required to obtain useful lengths of sapphire crystals from a LaF_3 - Al_2O_3 flux are quite large. Laudise used stirring rates of 200 r.p.m. for the growth of YIG crystals from a BaO - B_2O_3 flux (Ref. 2, 40).

If a rotation speed of 200 r.p.m. is assumed for the stirrer, and a radius of rotation equal to one-half the diameter of the crucible containing the melt, the speeds of flow across the crystal face can be estimated. These are:

1.5" diameter crucible - V = 20 cm/sec
4" diameter crucible - V = 53 cm/sec

When these speeds are used in the expressions for X_s at $1^{o}C$ and $5^{o}C$ undercooling (equation and) the results are:

X_s - 1.5" diameter crucible
$1^{o}C$ undercooling = 0.3×10^{-1} cm
$5^{o}C$ undercooling = 1×10^{-3} cm

X_s - 4" diameter crucible
$1^{o}C$ undercooling = 0.9×10^{-1} cm
$5^{o}C$ undercooling = 4×10^{-3} cm

These results for X_s predict that for 1 1/2" and 4" diameter crucibles, only crystal face lengths of the order of a millimeter can be produced without solvent inclusions at $1^{o}C$ or $5^{o}C$ undercoolings and stirring rates of 200 r.p.m.

These lengths can be increased if smaller undercoolings can be maintained in the growth system. An undercooling of 0.1°C, increase the value of X_s by a factor of 100, so that

X_s 0.1°C undercooling — 3 cm (1.5" diameter crucible); 9 cm (4" diameter crucible)

It is clear from the estimates of solution velocities produced by convection in Section 5.2.2, ~ 0.04 cm/sec, that large crystals without solvent inclusions could not be produced with even a 1°C undercooling if solution flow across the crystal face were provided only by convection.

The practical difficulty in using very small undercoolings to grow long crystal faces free of solvent inclusions is the long time required to increase the crystal size (thickness) in a direction perpendicular to the solution flow.

If the growth rate by the screw dislocation mode is computed for the 0.1°C undercooling, the value of dr/dt is:

$$\frac{dr}{dt} = 1.1 \times 10^{-4} \frac{g}{k} \text{ (cm/hr)} \tag{82}$$

This corresponds to a growth of 0.96 g/k cm/yr. Again the major uncertainty is in the value of k, the ratio of the crystal interfacial energy in the solution to its energy in vacuum. If k has a value near 0.1, the rate of growth of perfect crystals could correspond to a centimeter per month at a 0.1°C undercooling.

5.4 Factors which Influence Crystal Perfection

In order to find new fused salt solvents which could lead to the growth of more perfect crystals or to the growth of larger crystals free of solvent inclusions, it is useful to examine Carlson's equation (56) in terms of crystal and solution variables. Such an examination was begun in Section 5.3 where substitutions for the supersolubility and growth rate produced equation (79).

If this latter equation is further modified by using the Stokes Einstein equation to express the diffusion constant in terms of the radius of the diffusing ion or molecule and the viscosity of the solution, the result is,

$$X_s = 605 \frac{v\,\sigma^2 (r)^{2/3} \mu^{1/3} \rho_s^{1/3} \exp\left(-\frac{2\Delta S\,\Delta T}{RT}\right) F_{sw}^{\;2}}{\Delta S^2\,\Delta T^2\,T^{2/3}\left(\frac{R}{N}\right)^{2/3} \rho_c^{\;2}} \tag{83}$$

where

v	is the velocity of solution sweeping along the crystal face (cm/sec)
σ	is the interfacial surface energy of the crystal (cal/cm^2)
r	is the radius of the diffusing molecule (cm)
μ	is the viscosity of the solution (gm/cm sec)
ρ_s	is the density of the solution (gm/cm^3)
ρ_c	is the density of the crystal (gm/cm^3)
ΔS	is the entropy change on precipitation of aluminum oxide (cal/$^\circ$C mole)
ΔT	is the undercooling of the solution ($^\circ$K)
T	is the temperature where growth occurs, ($^\circ$K)
R	is the gas constant (cal/ $^\circ$K mole)
F_{sw}	is the molecular or formula weight of the solute

and

N	is Avogadro's number

It can be seen that not only is the length of crystal which can be grown without inclusion directly proportional to the solution velocity, and inversely proportional to the square of the undercooling but that the crystal length is proportional to the square of the interfacial surface energy. Consequently, high interfacial surface energies which lower the screw dislocation growth rate, greatly increase the length of crystal which can be grown free of inclusions.

Contrary to most conventional thinking about desired flux properties, the solution viscosity itself has little effect on the length of the crystal which may be produced free of inclusions. The same may be said for the solution density. Both of these factors affect the crystal length by the one-third power. The radius of the solute ion or molecule, r, which is not amenable to change enters into the expression for X_s as the two-thirds power. (16)

VI. CONCLUSIONS AND RECOMMENDATIONS

A study has been conducted of the solution variables and crystal growing parameters which control the growth of large perfect crystals of sapphire and ruby from fused salt solvents. The objectives of the program were twofold: (1) to identify and understand the dominant variables in the flux growth of ruby and sapphire, and (2) to provide means for predicting the sizes, shapes temperature gradients, and cooling rates of crystal growing systems which would lead to the optimum production of ruby and sapphire from given fused salt solvents. The study contained both experimental measurements and theoretical analyses. The results of the study are:

1. The development of a set of working formulas for the prediction of suitable growth conditions from fused salt fluxes. Formulas are presented for the efficient development of supersaturation by the slow cooled and thermal gradient methods and for determining the conditions necessary to prevent solvent inclusions, the common defect of flux grown crystals. The formulas have been obtained either from the open literature on crystal growth, by derivation, or by modification of crystal growing equations for other media. They include means for predicting the change of solubility with temperature when measured data are not available, means for estimating the probable magnitude of convection currents, means for predicting the effects of stirring, and means for estimating the conditions which may cause homogeneous nucleation.

2. Specification of the qualities which make growth of refractory oxides from fused salt fluxes a unique crystal growing problem. The primary distinction between fused salt fluxes and other crystal growing solvents has been shown to be due only to the high temperatures. These lower the free energy available for crystal growth with a concomitant reduction in the

supersaturation possible from given undercoolings.

3. The factors which control the growth rate of aluminum oxide from fused salt fluxes have been examined. The examination included consideration of the screw dislocation mode of growth, the mononuclear mode of growth, the polynuclear mode of growth, diffusion controlled growth, and heat flux controlled growth.

4. Experimental determinations of the density and viscosity of an 80 mole percent LaF_3 - 20 mole percent Al_2O_3 flux as a function of temperature have been made and the results reported. Equipment was constructed to determine the solubility of Al_2O_3 in the same flux but determinations of this solubility did not prove successful.

5. The formulas for predicting growth conditions have been applied to the growth of aluminum oxide from an 80 mole percent LaF_3 - 20 mole percent Al_2O_3 flux. Equations are given for the cooling rate to be employed for a slow cooling method of generating supersaturation, and for the temperature gradients and solution flows required if the thermal gradient method of generating supersaturation is used. The lengths of crystals which could be grown free of solvent inclusions have been estimated for two crucible sizes, and three undercoolings.

It has been concluded that:

1. The screw dislocation mode of growth is probably the dominant growth process for sapphire and ruby at moderate undercoolings in the fluxes of interest. Limitations upon the growth rate from heat dissipation processes are not expected to occur during the flux growth of sapphire and ruby except for special experimental arrangements.

2. The rate of homogeneous nucleation of sapphire and ruby nuclei in fused fluxes between 1400°C and 1500°C is probably very low at undercoolings up to 20°C. The production of batches of many small crystals must occur

from large undercoolings or from the introduction of heterogeneous nuclei into the melts.

3. Any batch growth process for the flux growth of large sapphire and ruby crystals must allow for mass solvent flow within the container by stirring. Convection and diffusion rates along are not sufficient to produce good crystals or more than microscopic size.

4. The presence of solvent inclusions and similar defects in flux grown crystals is to be expected when batch experiments are carried out without stirring. Such defects are caused by hydrodynamic factors in the crystal growth system and should not be used as evidence against the exploitation of a particular fused salt flux.

5. Growth of perfect crystals of sapphire or ruby from fused salt solvents in general will require relatively large diameter crucibles (4" or more), high stirring rates (200 r.p.m.), and small undercoolings. The major problem which the crystal grower must face in attempting the growth of large perfect sapphire or ruby crystals from a fused salt solvent, such as the 80 mole percent LaF_3 - 20 mole percent Al_2O_3 solvent, is caused by the total time needed to produce a crystal of a desired thickness.

It is recommended that:

1. The flux technique of crystal growth be considered a useful working tool for the growth of large perfect crystals of refractory materials. Present difficulties with the method can be overcome by planned logical effort.

2. The factors which are needed to predict conditions for the crystal growth of ruby, sapphire and other technologically important refractory oxides be investigated. These factors are:

a. Solute solubilities

Measurement of the solute solubilities which include the densities of the saturated fluxes are required.

b. The diffusion constant of the solutes in their fluxes

Direct measurements of the diffusion constants for solutes are desirable but estimates of their magnitude may be obtained from viscosity measurements upon the molten fluxes.

c. The interfacial energies of crystalline solutes in the fluxes

Measurements and/or calculations of crystalline interfacial energies in fluxes are urgently needed. The probable mode of growth in fused salt solvents, the screw dislocation process, causes the length of crystals which can be grown free of solvent inclusions to be dependent on the square of the interfacial energy. The time period required for growth is directly proportional to the interfacial energy.

3. Preliminary appraisals be made for a number of fused salt solvents which have shown promise for the growth of single crystals of refractory oxides now unobtainable by other growth methods. These appraisals should encompass predictions of probable changes in solubility with temperature, cooling rates or temperature gradients, and length of crystals which can be expected to be grown without solvent inclusions.

4. A detailed study be carried out upon the factors which influence the distributions of dopants in flux grown crystals.

REFERENCES

1. Dugger, Cortland O., "Solvents for Aluminum Oxide and other Refractory Oxides," Station Report - Solid State Science Laboratory, Air Force Cambridge Research Laboratories, L. G. Hanscom Field, Bedford, Massachusetts. To be published.

2. Laudise, R. A., "Molten Salt Solvents," The Art and Science of Growing Crystals, edited by J. J. Gilman, John Wiley & Sons, Inc., New York, 1963. Pages 252-273.

3. Bloom, H., and Bockris, John O'M, "Structural Aspects of Ionic Liquids," Fused Salts, edited by Benson Ross Sundheim, McGraw-Hill Book Company, Inc., New York, 1964. Pages 1-62.

4. Frank, F. C., "The Influence of Dislocations on Crystal Growth," Crystal Growth, Discussions of the Faraday Society No. 5, 1949, Butterworths Scientific Publications, London, 1959. Pages 48-54.

5. Hillig, W. D., "Kinetics of Solidification from Nonmetallic Liquids," Kinetics of High Temperature Processes, edited by W. D. Kingery, John Wiley & Sons, Inc., New York, 1959. Pages 127-135.

6. Nielsen, A. E., Kinetics of Precipitation, A Pergamon Press Book, The MacMillan Company, New York, 1964.

7. Nielsen, A. E., "Nucleation in Aqueous Solution," Crystal Growth, edited by H. Steffen Peiser, Pergamon Press, 1967. Pages 419-426.

8. Kingery, W. D., Introduction to Ceramics, John Wiley & Sons, Inc., New York, 1960.

9. Jost, W., Diffusion in Solids, Liquids, Gases, Academic Press, Inc., New York, 1952.

10. Sundheim, Benson Ross, "Transport Properties of Liquid Electrolytes," Fused Salts, McGraw-Hill Book Company, Inc., New York, 1964. Pages 165-254.

11. Rossini, F. D., and Wagman, D. D., "Selected Values of Chemical Thermodynamic Properties," Circular of the National Bureau of Standards 500, United States Government Printing Office, Washington, D. C., 1952.

12. Lange, N. A., Handbook of Chemistry, Ninth Edition, McGraw-Hill Book Company, Inc., New York, 1956.

13. Ivantsov, G. P., "Thermal and Diffusion Processes in Crystal Growth," Growth of Crystals, Reports at the First Conference on Crystal Growth 5 - 10 March 1956, English Translation, Consultants Bureau Inc., New York, 1958. Pages 76-85.

14. Ivantsov, G. P., "Thermal and Diffusion Processes in Crystal Growth. II," Growth of Crystals, 3, edited by A. V. Shubnikov and N. N. Sheftal, English Translation, Consultants Bureau, New York, 1962. Pages 53-64.

15. Adams, C. M., "Thermal Considerations in Freezing," Liquid Metals and Solidification, American Society for Metals, Cleveland, Ohio, 1958. Pages 187-217.

16. McLaughlin, E., "The Thermal Conductivity of Liquids and Dense Gases," Chemical Reviews, 64, 1964. Pages 389-428.

17. Hague, J. R., et al, Refractory Ceramics for Aerospace, The American Ceramic Society, Inc., Columbus, Ohio, 1964.

18. Gray, D. E., American Institute of Physics Handbook, McGraw-Hill Book Company, Inc., New York, 1957.

19. Dunning, W. J., "Theory of Crystal Nucleation from Vapor, Liquid and Solid Systems," Chemistry of the Solid State, edited by W. E. Garner, Butterworth Scientific Publications, London, 1955. Pages 159-183.

20. Grober, H., and Erk, S., Fundamentals of Heat Transfer, McGraw-Hill Book Company, Inc., New York, 1961.

21. Pellew, A., and Southwell, R. V., "On Maintained Convective Motion in a Fluid Heated from Below," Selected Papers on the Theory of Thermal Convection, edited by Barry Saltzman, Dover Publications, Inc., New York, 1962. Pages 66-97.

22. Bosworth, R. C. L., Heat Transfer Phenomena, John Wiley & Sons, Inc., New York, 1952.

23. McAdams, W. H., Heat Transmission, Third Edition, McGraw-Hill Book Company, Inc., New York, 1954.

24. Sheftal, N. N., "Real Crystal Formation," Growth of Crystals, Reports at the First Conference on Crystal Growth 5 - 10 March 1956, English Translation, Consultants Bureau Inc., New York, 1958. Pages 5-25.

25. Carlson, A., "The Fluid Mechanics of Crystal Growth from Solution," Growth and Perfection of Crystals, edited by R. N. Doremus, B. W. Roberts, and David Turnbull, John Wiley & Sons, Inc., New York, 1958. Pages 421-426.

26. Barton, C. J., Friedman, H. A., Grimes, W. R., Insley, H., Moore, R. E., and Thoma, R. E., "Phase Equilibria in the Hekali Fluoride - Uranium Tetrafluoride Fused Salt Systems: 1 The systems LiF - UF_4 and NaF - UF_4," J. Am. Ceram. Soc. 41 (2) 1958. Pages 63-69.

27. Friedman, H. A., "Modifications of Quenching Techniques for Phase Equilibrium Studies," J. Am. Ceram. Soc. 42 (6) 1959. Pages 284-285.

28. Tucker, P. A., and Joy, E. F., "A Thermal-Gradient Quenching Furnace for Preparation of Fused Salt Samples for Phase Analysis," Am. Ceram. Soc. Bull. 36 (2) 1957. Pages 52-54.

29. MacKenzie, J. D., "Simultaneous Measurements of Density, Viscosity, and Electric Conductivity of Melts," Rev. Sci. Instr. 27 (5) 1956. Pages 297-299.

30. Rait, J. R., and Hay, R., "Viscosity Determinations of Slag Systems," J. Tech. Col. Glasgow 4, 1938. Pages 252-275.

31. MacKenzie, J. D., "Visometry," Physicochemical Measurements at High Temperatures, edited by J. O'M Bockris, J. L. White, and J. D. MacKenzie, Academic Press, Inc., New York, 1959. Pages 313-333.

32. Yao, T. P., and Kondic, V., "The Viscosity of Molten Tin, Lead, Zinc, Aluminum, and Some of Their Alloys," J. Inst. Metals 81, 1952-1953. Pages 17-24.

33. Dugger, Cortland O., Private Communication to Authors - Solid State Science Laboratory, Air Force Cambridge Research Laboratories, L. G. Hanscom Field, Bedford, Massachusetts.

34. Farland, Tormod, "Thermodynamic Properties of Fused Salt Systems," Fused Salts, edited by Benson Ross Sundheim, McGraw-Hill Book Company, Inc., New York, 1964. Pages 63-164.

35. Pearson, T. G., and Waddington, J., "Electrode Reactions in the Aluminum Reduction Cell," Electrode Processes, Discussions of the Faraday Society No. 1, Gurney and Jackson, London, 1947. Pages 307-320.

36. Gibson, J. A., Miller, J. F., Kennedy, P. S., and Rengstorff, G. W. P., The Properties of the Rare Earth Metals and Compounds, Battelle Memorial Institute, Columbus, Ohio, 1959.

37. Kelley, K. K., "High Temperature Heat Content, Heat Capacity, and Entropy Data for Inorgainic Compounds," United States Department of Interior Bureau of Mines, Bulletin 476, United States Government Printing Office, Washington, D. C., 1949.

38. Giedt, W. H., Principles of Engineering Heat Transfer, D. Van Nostrant Company, Inc., New York, 1957.

39. Mullin, J. W., Crystallization, Butterworths Scientific Publications, London, 1961.

40. Laudise, R. A., Linares, R. C., and Dearborn, E. F., "Growth of Yttrium Iron Garnet on a Seed from a Molten Salt Solution," J. Appl. Phys. Supplement to Vol. 33 (3) 1962. Pages 1362-1363.

APPENDIX A

ASE-1165

INVESTIGATION OF THE
VARIABLES CONTROLLING
THE FLUX GROWTH OF HIGH
QUALITY LASER CRYSTALS

First Quarterly Progress Report Period: 20 August 1965 to 19 November 1965

Prepared for

Air Force Cambridge Research Laboratories
Office of Aerospace Research
Laurence G. Hanscom Field
Bedford, Massachusetts 01731

Contract No. AF 19(628)-5656

Prepared by

American Science and Engineering, Inc.
11 Carleton Street
Cambridge, Massachusetts 02142

This report is intended only for
the internal management use of
the contractor and the Air Force.

Approved:

Carolus M. Cobb

Carolus M. Cobb
Chief Chemist

I. INTRODUCTION

Work on Contract No. AF 19(628)-5656 is directed to solution studies on fused salt systems in order to provide information for the growth of sapphire and ruby crystals. The program includes experimental measurements and estimates of the sizes, shapes and temperature gradients of crystal growing systems required for flux growth.

During the first quarter a library search of the available flux systems for ruby growth was carried out. The initial results of this study were issued in the form of a technical report, ASE-1100, Synthetic Spinel Flux Growth Survey (Ref. 1). The study covered the published literature from 1907 to 30 August 1965.

The results of the literature survey and the recent work by Dugger (Ref. 2) indicate that studies of solubilities and phase equilibria for melts of the alkaline earth fluorides and aluminum oxide are needed before further progress on the growth of large crystals can be expected. An experimental program to determine these variables has been initiated.

II. TECHNICAL DISCUSSION

Flux techniques offer promise of producing the most perfect sapphire and ruby crystals for laser use. Dislocation counts less by a factor of ten than the best crystals from the Verneuil or Czochralski processes have been produced by flux methods (Ref. 3, 4, 5). However, to date, sapphire and ruby crystals grown by the technique have been small, often contained flux inclusions, and have shown twinning and inhomogeneous doping.

The defects of flux grown crystals arise from two different sets of variables. The first of these is the solubility temperature relationships which control nucleation and the total nutrient material available for growth. The second is the transfer variables which control the flow of heat and mass to and from the growing crystal face.

Solubility temperature data for aluminum oxide flux systems are rare. Previous interest has concentrated on those reactions of aluminum oxide which are of interest to ceramists rather than those of importance to crystal growth. The systems which have been used for flux growth of sapphire and ruby have been summarized by Cobb, Adamski, and Wallis (Ref. 6). Previous work has been almost exclusively confined to lead based systems.

The most interesting unstudied systems with vapor pressures low enough to allow work with open crucibles are those based on LiF, MgF_2, BaF_2, and MnF_2. These materials have melting temperatures below 1300°C and because of their fluoride anions should be good

solvents for oxides. Cerous fluoride (CeF_3), melting point 1430°C, and lanthanum fluoride, melting point 1493°C, are additional possibilities.

It is planned to determine the temperature dependence of the solubility of aluminum oxide in these fluxes during the next working periods. The solubilities and specifications of the phases which precipitate should clarify the usefulness of these fluxes for ruby and sapphire growth.

REFERENCES

1. Cobb, Carolus M., Synthetic Spinel - Flux Growth Survey, American Science and Engineering, Inc., ASE-1100, under Contract No. AF 19(628)-5656, 24 September 1965.

2. Dugger, Cortland O., "The Growth of Pink Magnesium Aluminate ($MgAl_2O_4$) Single Crystals." Submitted for publication to the Journal of the Electro-Chemical Society, 1965.

3. Nelson, D. F., and Remeika, J. P., "Laser Action in a Flux-Grown Ruby," Journal of Applied Physics 35 (3), 1964. Pages 522-529.

4. Janowski, K. R.; Stofel, E. J.; Chase, A. B.; Growth Defects in Flux-Grown Rubies. Aerospace Corporation, El Segundo, California, Contract No. AF 04(695)-469, 1964. AD 448467.

5. Stephens, D. L., and Alford, W. J., "Dislocation Structures in Single Crystal Al_2O_3," Journal of the American Ceramic Society 47 (2), 1964. Pages 81-86.

6. Cobb, C. M., Adamski, J. A., and Wallis, E. B., Investigation of Growth of Electromagnetic Single Crystals, Final Report. American Science and Engineering, Inc., under Contract AF 19(628)-3878, 26 December 1964, AFCRL-65-3.

APPENDIX B

ASE-2088

INVESTIGATION OF THE VARIABLES CONTROLLING THE FLUX GROWTH OF HIGH QUALITY LASER CRYSTALS

2nd Quarterly Progress Report Period: 20 November 1965 to 19 February 1966

Prepared for

Air Force Cambridge Research Laboratories
Office of Aerospace Research
Laurence G. Hanscom Field
Bedford, Massachusetts 01731

Contract No. AF 19(628)-5656

Prepared by

American Science and Engineering, Inc.
11 Carleton Street
Cambridge, Massachusetts 02142

This report is intended only for
the internal management use of
the contractor and the Air Force.

Approved:

Carolus M. Cobb
Chief Chemist

I. INTRODUCTION

Work on Contract No. AF 19(628)-5656 is concerned with studies on fused salt systems with the purpose of providing growth factor data for the flux growth of sapphire and ruby crystals. The problem includes experimental measurements of the sizes, shapes, and temperature gradients of systems used in flux growth.

During the second quarter, techniques were devised for studying the solubility and supersolubility relations of aluminum oxide and its compounds in fluoride based fluxes. These techniques are to be applied to fluxes found in the AFCRL survey (Ref. 1). The solubility data obtained in the study should delineate the regions where spontaneous nucleation can be expected and permit cooling schedules which avoid the onset of single crystal growth from multiple sites.

The rationale behind the experimental approach and the equipment now under construction is described in Section II.

II. TECHNICAL DISCUSSION

A large number of flux systems suitable for the growth of sapphire have become available as a result of recent work.

Dugger (Ref. 1) has studied 63 flux systems for potential use as media for the growth of aluminum oxide crystals (corundum). Crystals of corundum were found in the cooled matrixes of 23 of the fluxes. A substantial number of the other fluxes produced crystals with a spinel structure.

The technique of growth used for the survey studies, slow cooling through a 300° temperature range for a period of about 50 hours, produced a large crop of seed crystals which inhibited the growth of large single crystals. The occurrence of this excessive nucleation is characteristic of flux growth by a slow cooling technique.

Multiple nucleation can be avoided by forced growth upon a seed crystal. An exact knowledge of the solubility temperature relationships of the aluminum oxide in the flux is needed to accomplish this. In addition, a controlled temperature gradient in the growth chamber is necessary. With sufficient information about solubilities and the establishment of a suitable temperature gradient in the chamber, growth of large crystals from a flux can be accomplished by either slow cooling in the presence of a seed or use of a constant average temperature within the crucible and effecting solute transfer to the seed through convection produced by the temperature gradient (Ref. 2).

Techniques suitable for the precise determination of solubilities in the temperature regions of interest to the present program (1000° to 1600°C) have been described by Barton, et al, Friedman, Tucker and Joy (Ref. 3, 4, and 5). Two types of measurements are required, thermal analysis and quenching studies.

Thermal analysis (cooling curves) is used to locate the temperatures of the phase reactions which occur at fixed temperatures. These comprise eutectic, peritectic and congruent melting reactions. Quenching studies are used to locate the liquidus boundaries and determine the primary phases present at temperature.

The thermal analysis apparatus under construction for the flux studies is shown in Figure 1. Flux is held in a crucible (molybdenum for the fluoride fluxes) placed in a machined graphite block. The container block has a machined cover through which a stirrer, inert gas feed and thermocouple are inserted. The whole apparatus is heated in a 2" diameter globar furnace lined with a high temperature alumina tube. Temperature is measured with a platinum - platinum rhodium thermocouple and an Esterline Angus potentiometric recorder.

The gradient quenching apparatus is shown in Figure 2. A temperature gradient is established along the block by prior positioning in the furnace. The temperatures within the block are read by thermocouples. A tube containing flux with a known composition by weight is placed within the block, allowed to come to thermal equilibrium and then dropped from the block into oil. The relationships of the flux and precipitates at various temperatures are determined by noting the condition of the solidified flux as a function of its longitudinal position in the tube. The contemplated fluxes and temperatures necessitate that the initial quenching block be constructed from a molybdenum rod. To avoid the difficulty of making long holes in molybdenum, the rod will be sectioned and the holes cut in each half with a milling machine. The machined halves will then be fastened together. The quenching block contains a 1/4" center hole in which is placed the quenching tube. Six side holes 5/32" in diameter lead into the central chamber. These holes are for the introduction of thermocouples.

THERMAL ANALYSIS APPARATUS

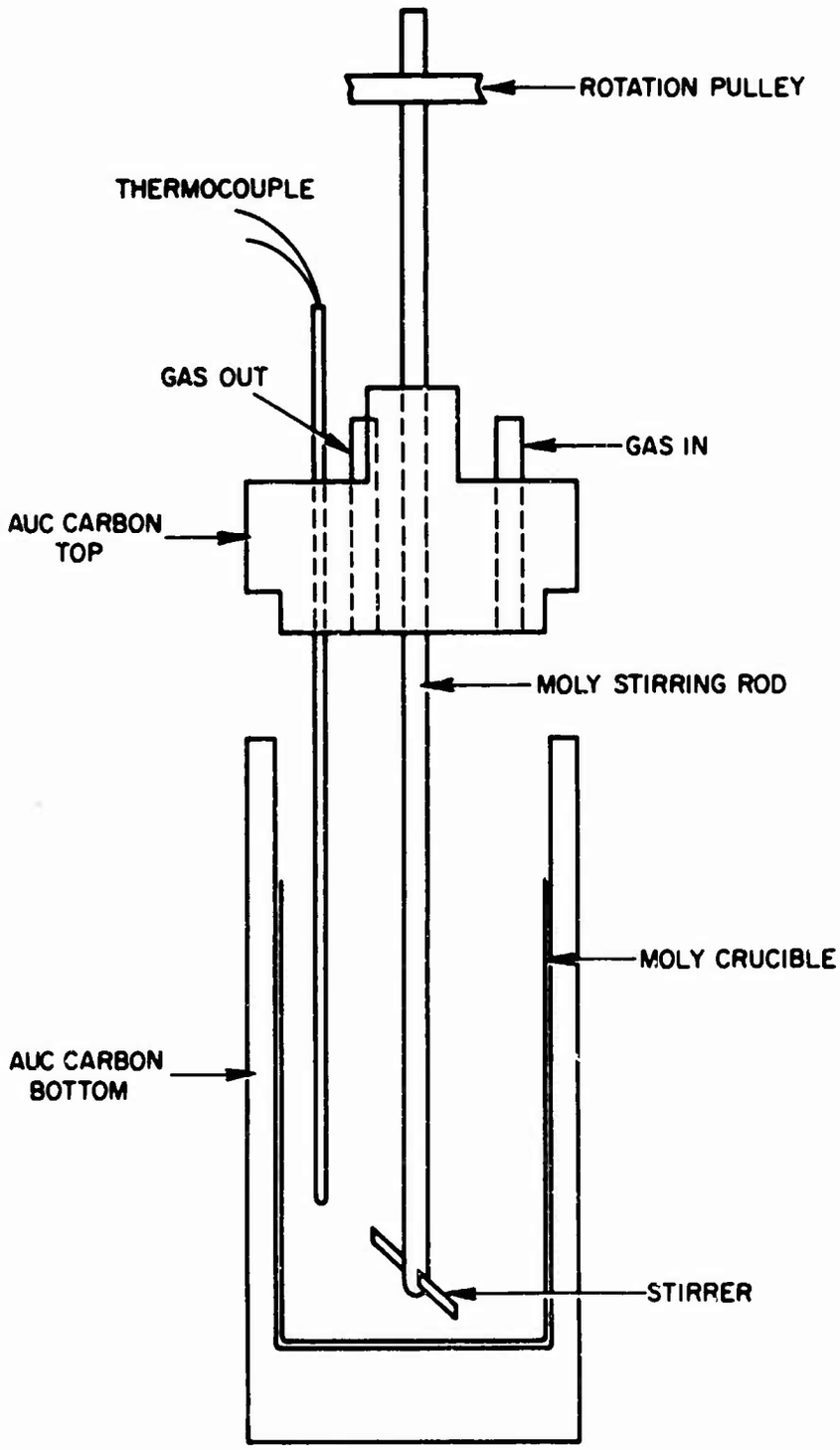

Figure 1

QUENCHING APPARATUS

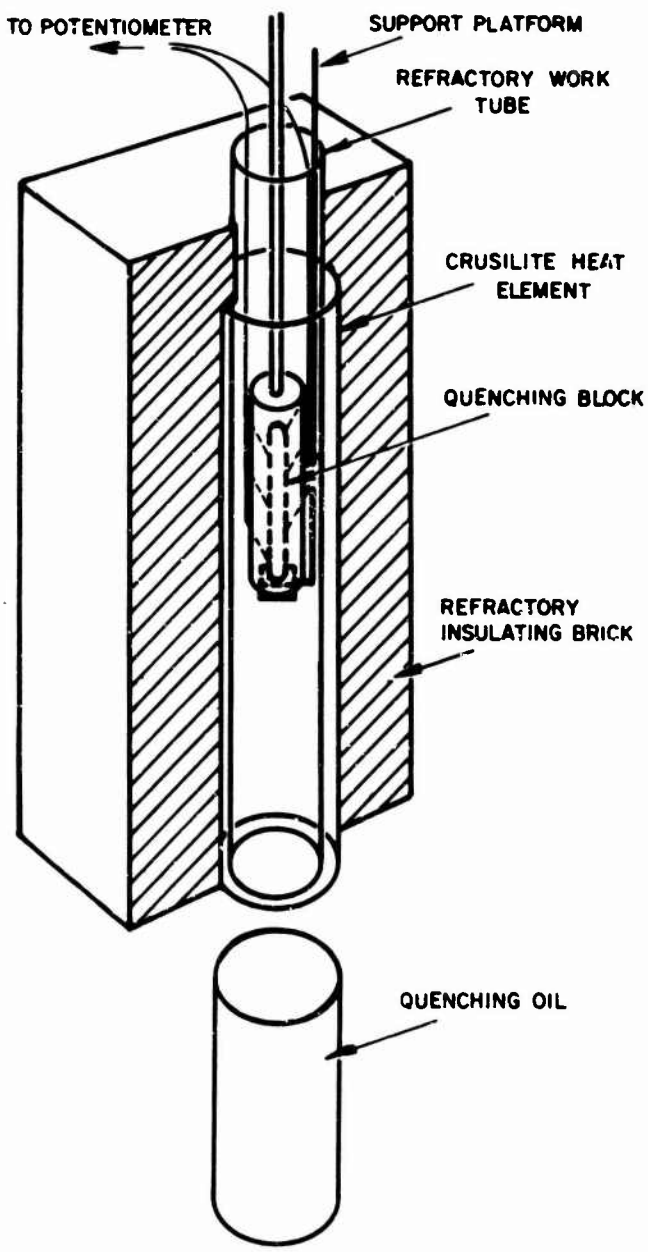

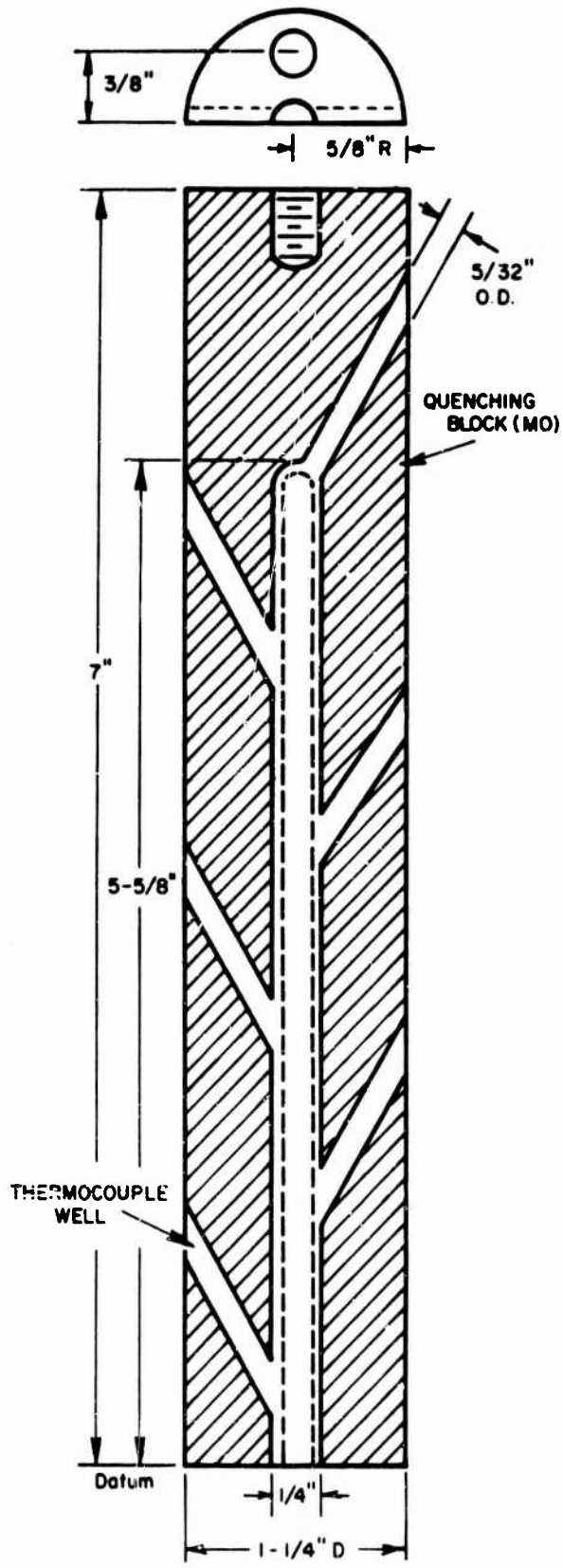

Figure 2

The quenching tubes for the fluoride fluxes will be constructed of 1/8" diameter molybdenum tubing having a 0.016 wall thickness. The tubes will be filled with previously fused melts and crimped at approximately 1/4" intervals to allow precise determination of the temperatures where specific phases occur.

III. DISCUSSION

Seeded growth of perfect corundum and spinel crystals from a molten flux has never been reported although technically this should be easier to accomplish than growth by the methods now employed. The information needed for controlled growth is (1) a knowledge of the possible fluxes, (2) good solubility data for the most promising fluxes, and (3) proper growth chamber design to provide a uniform flow of nutrient to the growth crystal.

The work now underway at the AFCRL Laboratories is steadily revealing new and more powerful flux systems. The determination of solubilities for the most promising of these systems will require tedious and lengthy measurements. These measurements are essential to success in extrapolating to larger growth systems.

REFERENCES

1. Dugger, Cortland. Private Communication to C. M. Cobb, January 1966.

2. Laudise, R. A., "Molten Salt Solvents," The Art and Science of Growing Crystals, edited by J. J. Gilman, John Wiley & Sons, New York, (1963).

3. Barton, C. J., Friedman, H. A., Grimes, W. R., Insley, H., Moore, R. E., and Thoma, R. E., "Phase Equilibrium in the Alkoli Fluoride - Uranium Tetrafluoride Fused Salt Systems: 1. The Systems $LiF-UF_4$ and $NaF-UF_4$." Journal of the American Ceramic Society 41 (2) (1958). Pages 63-69.

4. Friedman, H. A., "Modifications of Quenching Techniques for Phase Equilibrium Studies," Journal of the American Ceramic Society 42 (6) (1959). Pages 284-285.

5. Tucker, P. A., and Joy, E. F., "A Thermal Gradient Quenching Furnace for Preparation of Fused Salt Samples for Phase Analysis," American Ceramic Society Bulletin 36 (2) (1957). Pages 52-54.

APPENDIX C

ASE-1285

INVESTIGATION OF THE VARIABLES CONTROLLING THE FLUX GROWTH OF HIGH QUALITY LASER CRYSTALS

Third Quarterly Progress Report Period: 20 February 1966 to 19 May 1966

Prepared for

Air Force Cambridge Research Laboratories
Office of Aerospace Research
Laurence G. Hanscom Field
Bedford, Massachusetts 01731

Contract No. AF 19(628)-5656

Prepared by

American Science and Engineering, Inc.
11 Carleton Street
Cambridge, Massachusetts 02142

This report is intended only for
the internal management use of
the contractor and the Air Force.

Approved:

Carolus M. Cobb

Carolus M. Cobb
Chief Chemist

TABLE OF CONTENTS

Section	Description	Page
	Table of Contents	i
I	INTRODUCTION	1
II	TECHNICAL DISCUSSION	2
III	ANALYSIS OF D.T.A. DATA	11
	References	15

I. INTRODUCTION

Contract No. AF 19(628)-5656 is directed to experimental measurements of fused salt systems and calculations of the sizes, shapes, and probable temperature gradients required for the growth of crystals from such systems. The purpose of both the experimental and calculation programs is to provide growth factor data for the flux growth of sapphire and ruby crystals. The solution parameters which are to be investigated by experimental measurement are solubility, supersolubility, vapor pressure, viscosity and density.

In the first quarter of the program, a complete library search of the available flux systems for ruby, sapphire, and spinel was performed using Chemical Abstracts as the primary reference source. The results were issued as a report (Ref. 1).

In the second quarter, methods for the determination of solubility and supersolubility in the temperature regions of interest were studied. Equipment for these measurements was designed, and construction of the equipment initiated.

During the third quarter of the program, the construction of equipment for solubility and supersolubility studies was completed. The design of equipment for density, viscosity, and vapor pressure measurements at high temperatures was carried out and construction of this equipment begun. In addition, a method of analyzing the complex differential thermal analysis data now becoming available for fused salt systems was devised at the request of the Project Scientist.

The theory behind the density, viscosity, and vapor pressure measurements, and the equipment now under construction is described in Section II. An example of the method of treating differential thermal analysis data is given in Section III.

The parameters which are needed to make predictions about convective flow and critical length are the density, viscosity, and the variation of density with temperature. Although the thermal conductivity enters into the equations as an additional constant, this should be a slowly varying function at the temperatures of interest. It can be estimated from analogous solution data.

Determination of Density - Several methods are available for the determination of liquid densities at high temperatures (Ref. 4). The Archimedean method has been chosen for the current program. In this technique a molybdenum bob is weighed in air, then immersed in the molten salt and weighed again. The difference in the two weights, the buoyancy, B, is determined by the volume and density of the bob, the density of the liquid, and the surface tension of the liquid.

The equation relating the various parameters is,

weight of bob in vacuum - weight of bob in liquid = weight of liquid displaced + effective weight of the liquid column which rises on the supporting wire from surface tension.

In symbols $B = V_T \rho_l - 2\pi r \gamma \cos\theta$,

where B, the buoyancy, is the weight difference,

V_T is the volume of the bob and the portion of the supporting wire which is immersed,

ρ_l is the density of the liquid,

r is the radius of the wire,

γ is the surface tension of the molten salt,

and θ is the contact angle of the melt against the supporting wire.

If two different sized bobs are used, supported by wire of the same radius which is immersed to the same depth, the effects of surface tension can be

eliminated by writing equations for the two bobs, subtracting one from the other, and solving for ρ_1 .

Thus, $B_1 = V_{T1}\rho_1 - 2\pi r\gamma \cos\theta$,

$$B_2 = V_{T2}\rho_1 - 2\pi r\gamma \cos\theta ,$$

$$\rho_1 = \frac{B_1 - B_2}{(V_{T1} - V_{T2})} .$$

Since the volume of the bobs must be measured at room temperature, a correction must be made for the volume change caused by thermal expansion. This can be inserted in the equation as a multiplying factor, and the equation written in terms of bob volumes at room temperature.

Thus, $$\rho_1 = \frac{B_1 - B_2}{A_T (V_1 - V_2)} ,$$

where V_1 and V_2 are now bob volumes at room temperature,

and A_T is the thermal expansion of the bob metal from room temperature to the fused salt temperature.

An apparatus patterned after the one used by MacKenzie (Ref. 5) has been designed for the liquid density measurements of the program. Figure 1 is a schematic drawing of this apparatus. A standard Troemner chainweight specific gravity balance is used for the determination of the buoyancy. This apparatus has a specific gravity range of 0 to 2.100 and an accuracy within $\pm$ 0.0001. The range will be extended to 4.0000 for the fused salt systems under study by using an additional counterweight. The bobs are to be machined from molybdenum and supported on a tungsten wire. A molybdenum crucible will contain the melt.

Immersion of the bob will be controlled by supporting the crucible on an alumina pedestal which can be raised or lowered by a lab jack with a pointer

FUSED SALT DENSITY APPARATUS

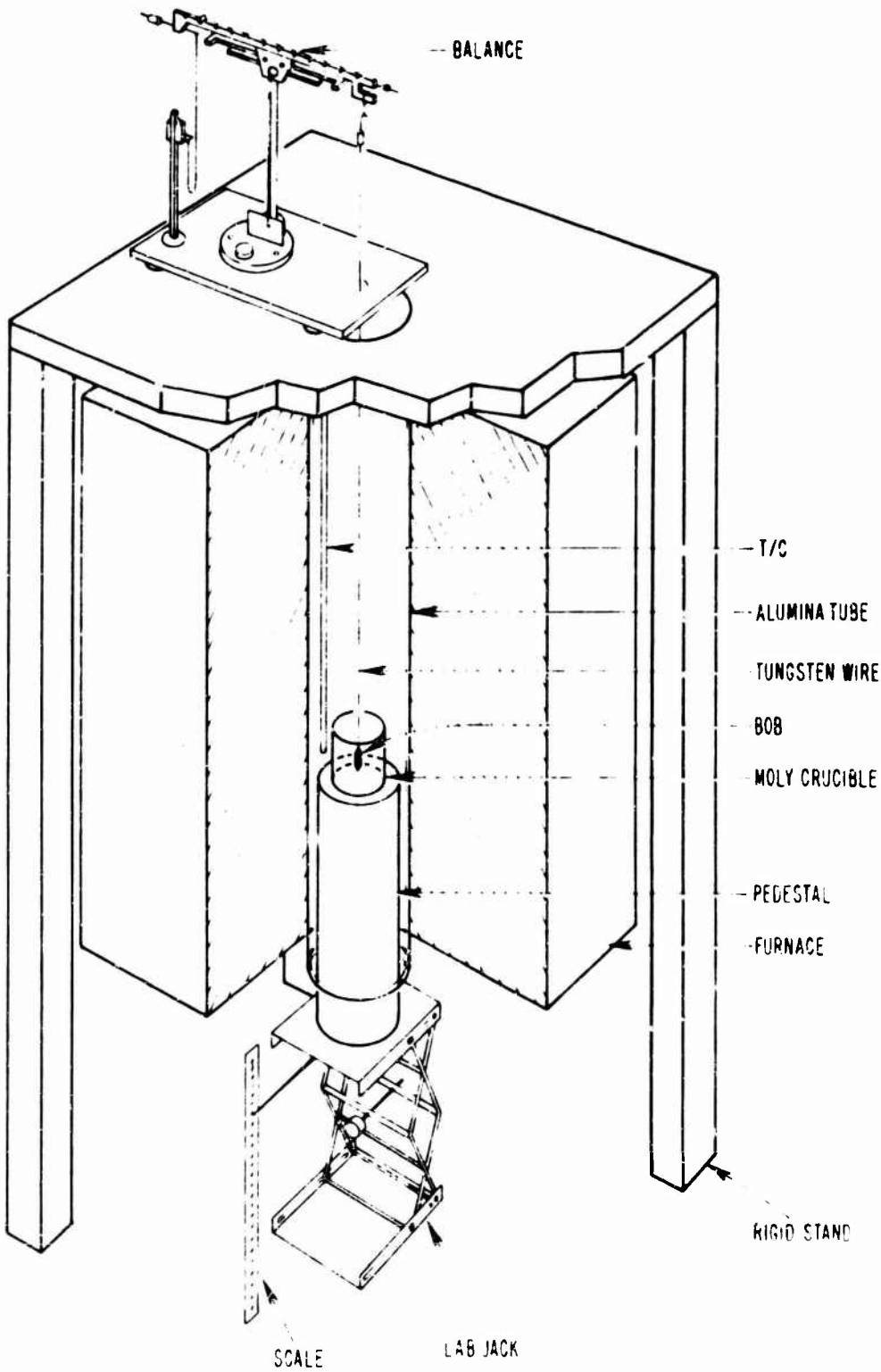

Figure 1

and scale to indicate the distance traveled. Careful elevation of the pedestal and crucible is made until a pronounced movement of the suspension is observed. The position on the scale is noted and the lab jack is raised the required distance to completely immerse the bob.

The temperature of the melt will be determined either by a thermocouple beside the crucible or by a direct reading of the surface temperature using a pyrometer.

Determination of Viscosity - Fused salts generally have viscosities measured in centipoises and comparable to that of water (Ref. 6). No data for fluoride melts could be found however, although Klemm (Ref. 7) has tabulated all the available data for fused salts. It has been assumed that fused fluoride melts are similar to other fused halide melts.

The technique which has been chosen for the measurement of viscosities during the current program is that of the oscillating bob. This method is recommended for viscosity determinations when values in the centipoise range are expected (Ref. 8).

The pertinent aspects of the method are shown in Figure 2. A molybdenum bob supported on a tungsten wire is immersed to a fixed depth in the molten salt, and put into a rotational oscillation. The angular swing is observed by light reflected from a mirror attached to the wire and focused on a galvanometer scale. The decrease in amplitude during successive swings is noted and the logarithmic decrement $\frac{\Delta X}{X}$, the amplitude during an oscillation divided by the amplitude at the beginning of the oscillation is calculated.

The relationship between viscosity and logarithmic decrement has been given by Fawsitt (Ref. 9) as,

$$\lambda - \lambda_o = C_1 (\rho\mu)^{1/2} + C_2 \mu + C_3 \mu\rho$$

FUSED SALT VISCOSITY APPARATUS

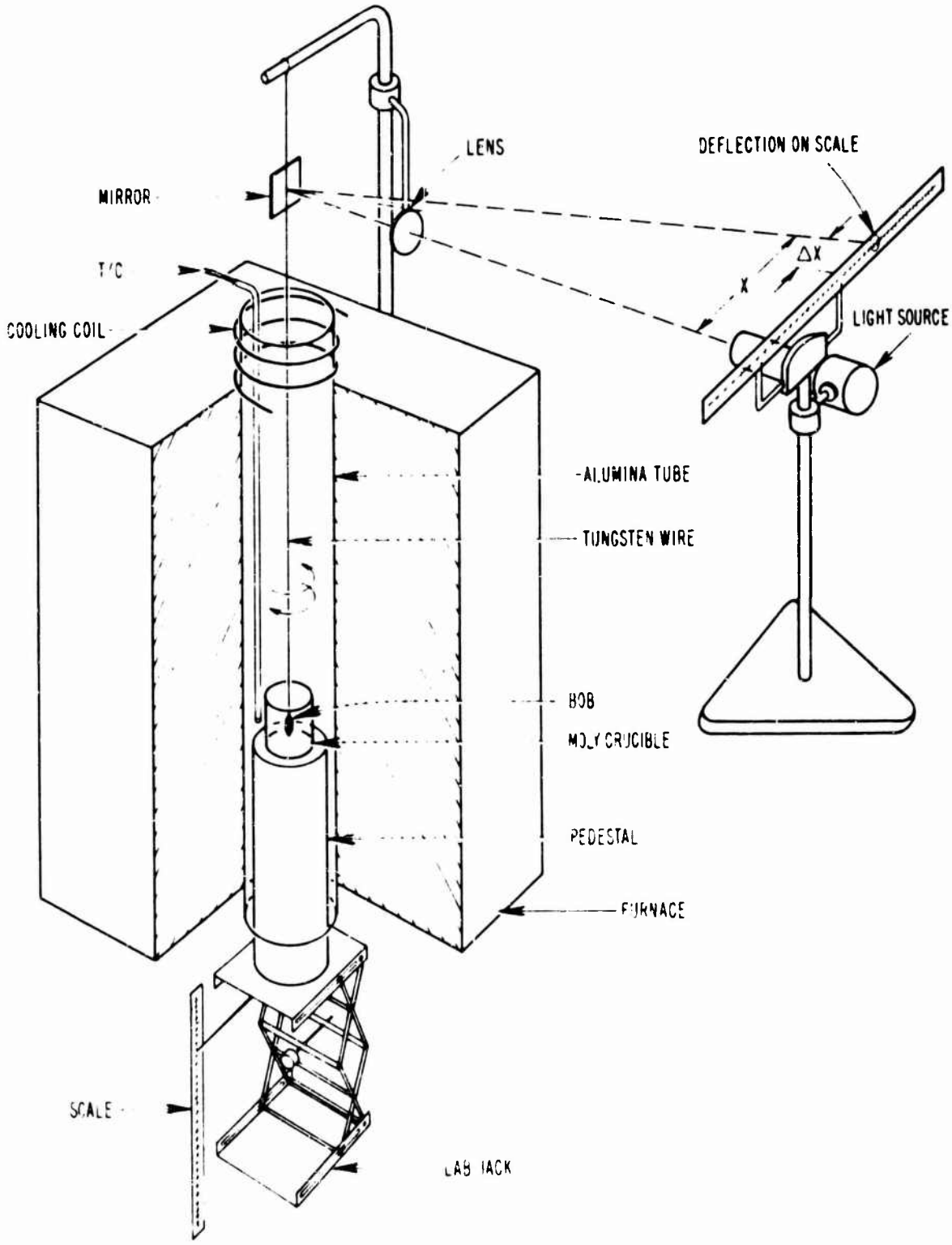

Figure 2

where λ and λ_o are the logarithmic decrements in the melt and in air respectively,

μ is the viscosity,

ρ is the density of the liquid,

and C_1, C_2, and C_3 are constants of the apparatus which depend on immersion depth and end clearance. They can be determined by measurements upon liquids of known viscosity and density such as water, benzene, and chloroform.

Vapor Pressure Determinations - Several methods are available for measuring vapor pressures at elevated temperatures (Ref. 10). The most convenient technique, although limited to low pressures, is the determination of vapor pressure through weight loss.

Vapor pressures are determined from weight loss measurements by heating a weighed sample of known surface area for a measured period of time. The sample is cooled, reweighed, and the vapor pressure calculated from the weight loss per unit area. The method is considered applicable to the pressure range from 10^{-11} to 10^{-3} atm (Ref. 10).

Vapor pressure determinations from weight loss measurements are feasible for the barium fluoride and magnesium fluoride systems of current interest for fused salt flux systems. These materials have vapor pressures of 10^{-3} atm at an estimated 1400°C for magnesium fluoride and an estimated 1390°C for barium fluoride (Ref. 11).

The equation which relates vapor pressure to weight loss is,

$$Z = \frac{44.4P\alpha}{\sqrt{MT}} ,$$

where Z is the rate of evaporation in moles per second per square centimeter of surface,

P is the equilibrium vapor pressure in atmospheres,

M is the molecular weight of the substance in the gaseous state,

α is the accomodation coefficient,

and T is the absolute temperature in ^{o}K.

The method is uncertain to the degree to which information is lacking about the species vaporizing and those present in the equilibrium gases.

The coefficient α, the accomodation coeffieient introduces another uncertainty. The accomodation coefficient is assumed to be equal to the condensation coefficient, which is defined as the fraction of the molecules striking a surface which stick to the surface during condensation. Barring an alternate method of determining α, it is usually assumed to be equal to unity in vapor pressure estimations.

III. ANALYSIS OF D.T.A. DATA

A method for analyzing the extremely complex D.T.A. curves now being obtained at the Crystal Physics Laboratories was developed during the quarter at the request of the Project Scientist.

The problem to be solved is illustrated with the data of Dugger (Ref. 13) shown in Figure 3 which is taken from an article by that author submitted to the International Congress on Crystal Growth. Figure 3 shows a typical differential analysis plot in which the difference emf developed between thermocouples immersed in an unknown sample and a reference material is plotted against the average temperature of the samples. The difference emf developed between the two materials is caused by a steady rate of temperature increase in the furnace surrounding the samples. The technique and theory of the method have been described in detail by Dugger (Ref. 12).

The most significant feature of the plot shown in Figure 3 is the large number of peaks and flats. Each of these is believed to correspond to a phase change or a chemical reaction. The D.T.A. data shown in Figure 3 are for an equimolar mixture of barium fluoride and magnesium fluoride. Since the D.T.A. apparatus is extremely sensitive, phase changes or chemical reactions for magnesium fluoride alone, magnesium fluoride with absorbed water, barium fluoride alone, barium fluoride with absorbed water, and for solutions and compounds formed between the barium fluoride and magnesium fluoride may be present on the plot.

The problem is to match specific peaks with known reactions or phase changes. It is further complicated by the fact that although the temperatures at which individual peaks occur, when they do occur, are relatively constant,

DTA PLOT FOR AN EQUILMOLAR BaF_2-MgF_2 MIXTURE

DUGGER (Ref. 13)

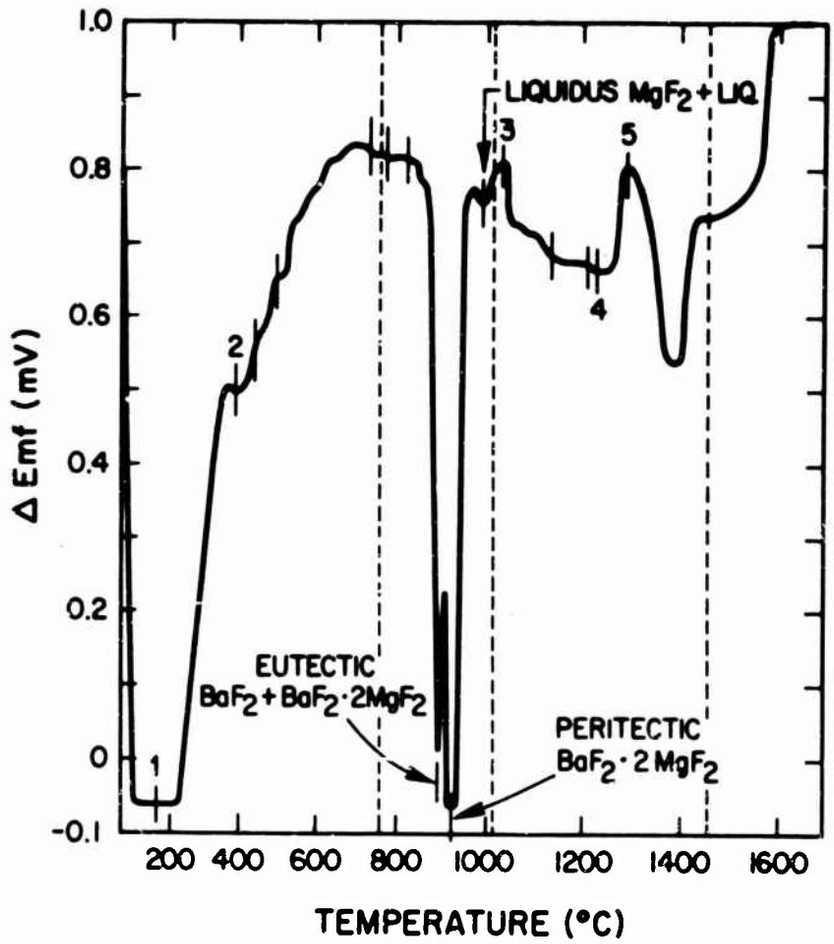

Figure 3

1285

many peaks disappear and reappear in successive runs. A number of D.T.A. tracings are usually made to ensure that a complete study has been accomplished.

A method of treating the large number of tracings produced by these studies is shown in Figures 4A, 4B, 4C, and 4D. The data have been supplied by the AFCRL Project Scientist. In these figures, the peaks and flats of D.T.A. thermograms have been plotted as horizontal lines arranged vertically according to the temperature at which they appear. Hence, the complex curve of Figure 3 is now represented by a column of horizontal lines.

Figure 4A presents side by side D.T.A. thermograms for eight runs upon equimolar barium fluoride, magnesium fluoride mixtures. The thickness of the lines has been drawn equal to the estimated uncertainty in the temperature determinations.

The general shape of each perturbation in the D.T.A. thermogram is indicated beside its line by a letter, as F, for flat; P, for peak; Exo P, heat evolving peak; etc. The temperatures at which peaks or flats could be expected because of recorded phase changes, i.e. The melting point of magnesium fluoride are indicated on the right hand margin of Figure 4A.

The D.T.A. data in Figures 4B, 4C, and 4D have been plotted in the same way to the same scale but have been printed in different colors on transparent overlays so that they may be placed over the data of Figure 4A. This is desirable to allow matching of thermogram perturbations.

Figure 4B (yellow) shows the D.T.A. profile for two thermograms in which dried aluminum oxide, the customary reference standard, was run against hydrated aluminum oxide. It can be seen that some of the peaks of Figure 4B match those of Figure 4A and it is probable that those peaks in Figure 4A which do so match were caused by the reference aluminum oxide absorbing water between runs on the equimolar barium fluoride and magnesium fluoride mixtures.

Figure 4C (blue) shows D.T.A. profiles for so-called "hydrated" magnesium fluoride. Again, some of the peaks match those of Figure 4A as well as those of Figure 4B.

Finally, Figure 4D (red) shows D.T.A. profiles for "anhydrous" magnesium fluorides. The general reproducibility of the apparatus is shown by the matching of lines with the melting point of magnesium fluoride.

The purpose of the study described here was to develop a simple and accurate technique capable of grouping large amounts of data into a form suitable for comparison and review. This has been achieved. The method is simple. The plots can be drawn by the scientist on transparent drafting paper and can be printed using a standard drafting room Ozalid machine. The transparent overlays are made with specially treated Ozalid paper which is also commercially available. The preliminary analysis already made indicate that the method is useful.

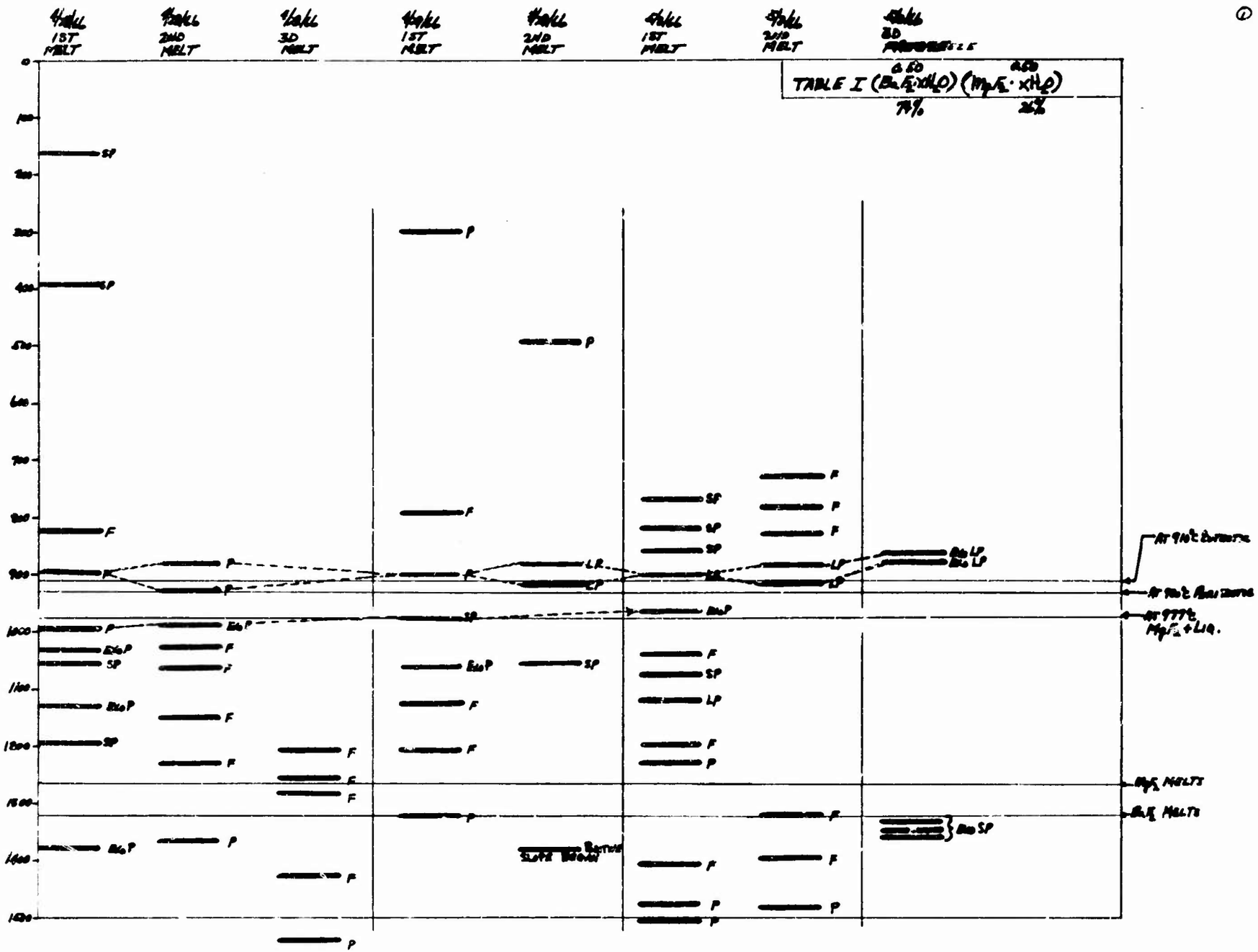
1ST MELT
2ND MELT
3D MELT
1ST MELT
2ND MELT
1ST MELT
2ND MELT
3D
TABLE I
74%
26%
AT 940°C
AT 900°C
AT 977°C
MgF2 + LIQ.
MgF2 MELTS
BaF2 MELTS

Figure 4A

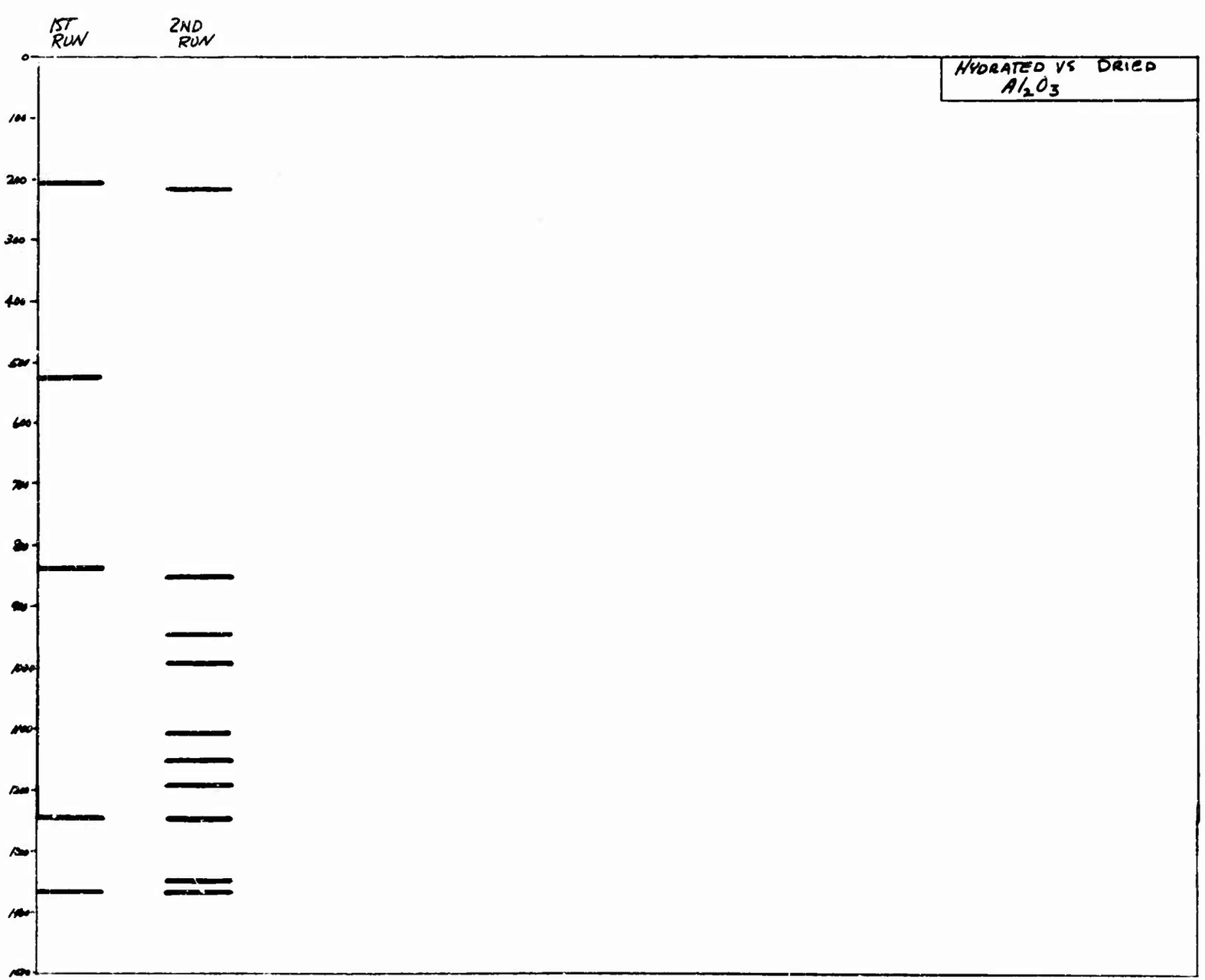

Figure 4B

028

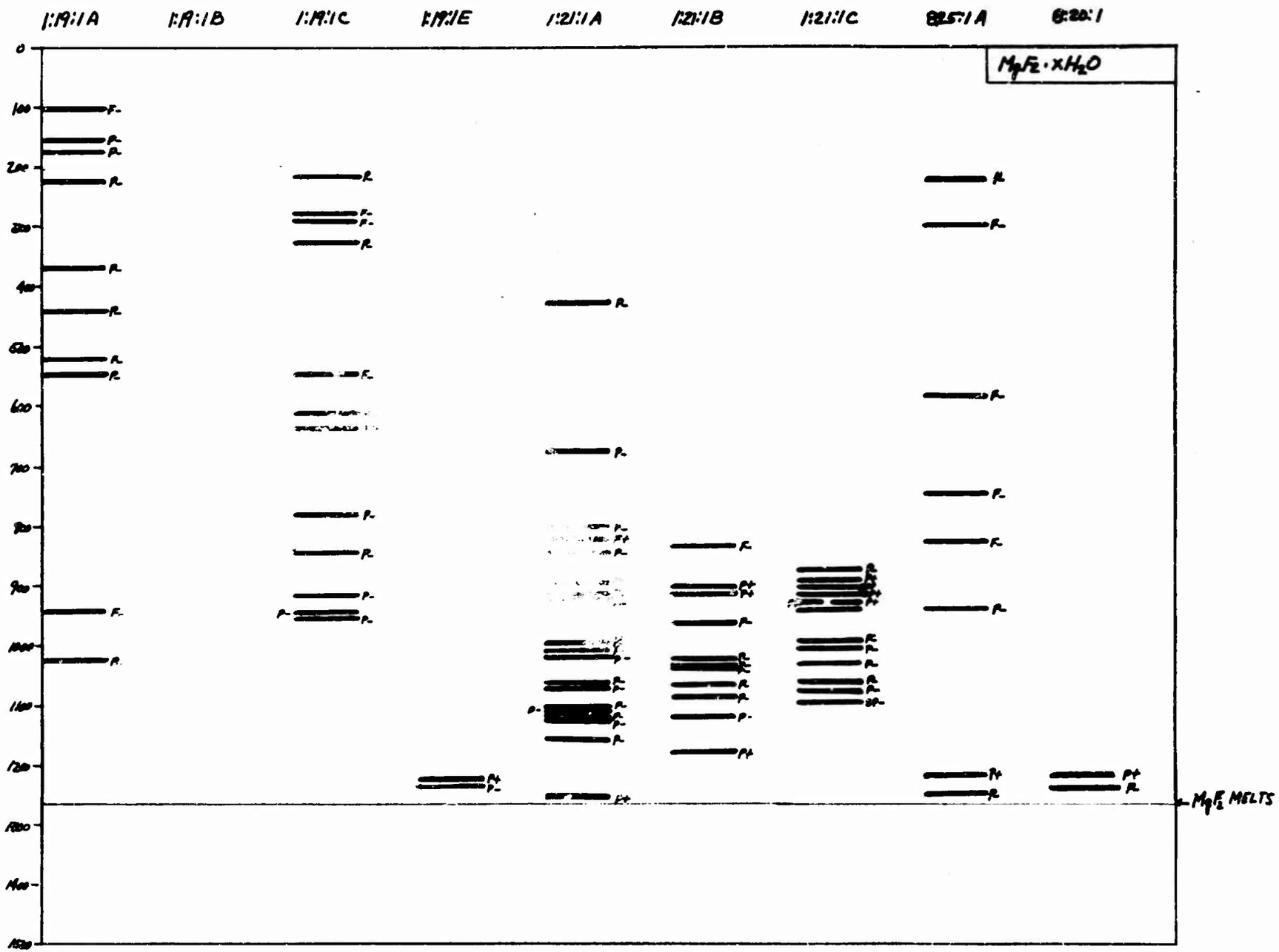
1:19:1A
1:19:1B
1:19:1C
1:19:1E
1:21:1A
1:21:1B
1:21:1C
8:5:1A
8:20:1
$MgF_2 \cdot xH_2O$
0
100
200
300
400
500
600
700
800
900
1000
1100
1200
1300
1400
1500
MgF_2 MELTS

Figure 4C

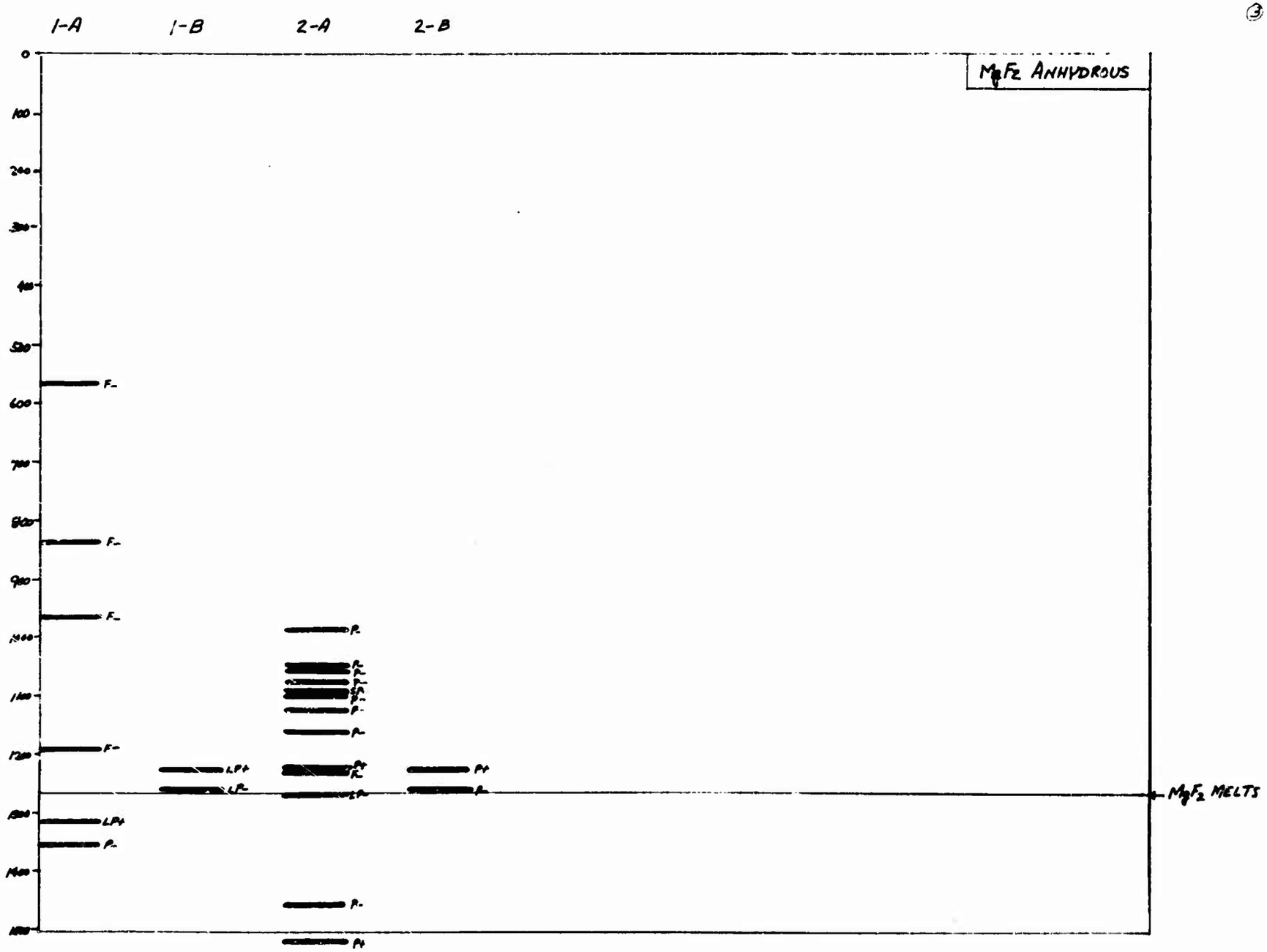

Figure 4D

024

REFERENCES

1. Cobb, C. M., Adamski, J. A., and Wallis, E. B., Synthetic Spinel Flux Growth Survey, American Science and Engineering, Inc., ASE-1100, under Contract No. AF 19(628)-5656, 24 September 1965.

2. Grober, H., and Erk, S., Fundamentals of Heat Transfer, translated by Jerzy R. Moszynski, McGraw-Hill Book Company, Inc., New York, 1961.

3. Carlson, Allen, "The Fluid Mechanics of Crystal Growth from Solutions," from Growth and Perfection of Crystals, edited by R. N. Doremus, B. W. Roberts, and David Turnbull, John Wiley & Sons, Inc., New York, 1958. Pages 421-426.

4. White, J. L., "Liquid Densitometry," Physicochemical Measurements at High Temperatures, edited by J. O'M. Brockris, J. L. White, and J. D. Mackenzie, Academic Press Inc., New York, 1959. Chapter 8.

5. Mackenzie, J. D., "Viscosmetry," from Physicochemical Measurements at High Temperatures, edited by J. O'M. Brockris, J. L. White, and J. D. Mackenzie, Academic Press Inc., New York, 1959. Chapter 15.

6. Sundheim, Benson Ross, Fused Salts, McGraw-Hill Book Company, Inc., New York, 1964.

7. Klemm, A., "Properties of Molten Salts," from Molten Salt Chemistry, edited by Milton Blander, John Wiley & Sons, Inc., New York, 1964.

8. Mackenzie, J. D., "Simultaneous Measurements of Density, Viscosity, and Electric Conductivity of Melts," The Review of Scientific Instruments, 27 (5), 1956. Pages 297-299.

9. Fawsitt, Proc. Roy. Soc. (London), A80, 290(1908); J. Chem. Soc., 93, 1299 (1908).

10. Margrave, J. L., "Vapor Pressure," from Physicochemical Measurements at High Temperatures, edited by J. O'M. Brockris, J. L. White, and J. D. Mackenzie, Academic Press Inc., New York, 1959. Chapter 10.

11. Brewer, Leo, "The Fusion and Vaporization Data of the Halides," from The Chemistry and Metallurgy of Miscellaneous Materials, edited by Laurence Quill, McGraw-Hill Book Company, Inc., 1950. Paper 7.

12. Dugger, Cortland O, "Differential Thermal Analysis (DTA) of Oxide Systems in Air to 1620°C at Atmospheric Pressure," AFCRL-65-466, June 1965, INSTRUMENTATION PAPERS, NO. 72, Office of Aerospace Research, United States Air Force.

13. Dugger, Cortland O, "Solution Growth of Spinel and Other Oxide Single Crystals by the Liquid Phase Hydrolysis of Fluorides," paper submitted to the International Conference on Crystal Growth, June 1966.

APPENDIX D ASE-1381

INVESTIGATION OF THE VARIABLES CONTROLLING THE FLUX GROWTH OF HIGH QUALITY LASER CRYSTALS

Fourth Quarterly Progress Report Period: 20 May 1966 to 19 August 1966

Prepared for

Air Force Cambridge Research Laboratories
Office of Aerospace Research
Laurence G. Hanscom Field
Bedford, Massachusetts

Contract No. AF 19(628)-5656

Prepared by

American Science and Engineering, Inc.
11 Carleton Street
Cambridge, Massachusetts 02142

This report is intended only for the internal management use of the contractor and the Air Force.

Approved:

Carolus M. Cobb

Carolus M. Cobb
Chief Chemist

Contract No. AF 19(628)-5656 is directed to experimental measurements of fused salt systems and calculations of the sizes, shapes, and probable temperature gradients required for the growth of crystals from such systems. The purpose of the experimental and calculation programs is to provide growth data for sapphire and ruby crystals. The solution parameters which are to be investigated by experimental measurement are supersolubility, vapor pressure, viscosity, and density.

During the first three quarters the available flux systems for ruby, sapphire and spinel were reviewed. Methods for the determination of solubility, supersolubility, density, viscosity, and vapor pressure were chosen and the construction of equipment for such measurements was initiated. During the fourth quarter the construction of equipment was completed and the apparatus applied to the study of fused salt systems.

Two systems were recommended for study by the AFCRL Project Officer. These are a mixture of 80 mole per cent cerium fluoride and 20 mole per cent aluminum oxide and a mixture of 80 mole per cent lanthanum fluoride and 20 mole per cent aluminum oxide. The results of the measurements upon these systems and the implications of the data to crystal growth from these systems will be presented in the Final Report for the project.

In addition to work upon the measurement of the fused salt solution parameters discussed above, work was also carried out upon the analysis of differential thermal analysis data by the method described in the Third Quarterly Progress Report (Ref. 1).

REFERENCE

1. Cobb, Carolus M., "Investigation of the Variables Controlling the Flux Growth of High Quality Laser Crystals." Third Quarterly Progress Report Period: 20 February 1966 to 19 May 1966. Prepared by American Science and Engineering, Inc., under Contract No. AF 19(628)-5656.

APPENDIX E ASE-1100

SYNTHETIC SPINEL
FLUX GROWTH SURVEY

Prepared for

Air Force Cambridge Research Laboratories
Office of Aerospace Research
Lawrence G. Hanscom Field
Bedford, Massachusetts

Prepared by

American Science and Engineering, Inc.
11 Carleton Street
Cambridge, Massachusetts 02142

24 September 1965

Approved:

Joseph A. Adamski

Carolus M. Cobb

Carolus M. Cobb
Chief Chemist

ABSTRACT

A literature search was made through Chemical Abstracts from 1907 to 30 August 1965.

The following key words were used for this survey:

Crystals, growth of

Crystallization

Crystallization, apparatus

Fluxes

Fluorides

Ruby

Spinel

This literature search was conducted by J. A. Adamski and E. B. Wallis. A total of fifty-six (56) abstracts were accumulated.

Artificial precious stones. Hj. Sjögren. *Årksbok Svenska Vet.-Akad.* 1921, 288-313; *Mineralog. Abstracts* 1, 382.—A review of the literature on artificial gem-stones (corundum and spinel) dealing with their production on a com. scale, and the criteria for distinguishing them from natural stones. E. F. H.

Artificial magnesia spinel. F. J. Tone. U. S. 1,448,010, Mar. 13. A mixt. contg. MgO and Al_2O_3 and a reducing agent such as coke is electrically smelted at a temp. sufficiently high to fuse the ores and reduce a portion of the metallic impurities to metallic form, the fused product is allowed to cool and the metallic impurities are sepd. to obtain an artificial spinel for use as a *refractory*

Note on Synthetic Corundum and Spinel. G. F. Herbert Smith. Mineral Dept., British Museum. *Mineral. Mag.*, 15, 153-5.—A description is given of the method used in the preparation of synthetic rubies. An artificial blue stone, called "Hope sapphire" by the trade, was shown to be spinel. W. T. Schaller.

Reactions on heating sulfides, carbides, silicides, phosphides, silicates and spinels with alkaline earth oxides. J. A. Hedvall. *Svensk Kem. Tids.* 37, 166-73(1925).—The substances indicated in the title were mixed with alk. earth oxides and heated, the first 3 groups in the presence of air or O_2, the others in N_2. BaO, SrO, CaO, MgO is the order of reaction intensity except with Ag_2S, with which CaO and MgO are reversed. BaO stands apart from the others in reacting at a definitely lower temp. This is explained by the formation of BaO_2. The sulfides are ZnS, Ag_2S and Cu_2S and their type reaction is: $BaO + ZnS + 2O_2 = BaSO_4 + ZnO$. For BaO reactions with the sulfides in the order given the temps are 321°, 312° and 312°, resp. In the graphs are shown striking bends in the curves at the critical temps. for BaO and SrO but not for CaO and MgO. Cu_2S differs from the other 2 in that the reactions with the other alk. earth oxides all take place at 377° instead of from 400° to 315°. There is a fundamental change in the Cu_2S at this temp., a conception supported by the sudden reaction with O_2 at 383°. The alk. earth oxides reacting with Cr_3C_2, $FeSi_2$, CaP_2 conform in kind with the sulfides and yield carbonates, silicates and phosphates, resp. The temps. are also similar; *e. g.*, for BaO 343°, 329° and 331°, resp. For the other alk. earth oxides the temps. are in excess of 400°. BaO-$FeSi_2$ react explosively. The silicates were heated in N_2 and are represented by wollastonite, enstatite, sillimanite and rhodonite. The reactions gave metal oxides and alk. earth silicates. For BaO the temps. were 354,° 351°, 357° and 355°, resp. The data for SrO are nearly 100° more than these and for CaO 200° more. MgO is not included in these or subsequent tests. The spinels were: $ZnO \cdot Al_2O_3$, $CoO \cdot Al_2O_3$, $CuO \cdot Al_2O_3$, $FeO \cdot Cr_2O_3$, $CoO \cdot Cr_2O_3$. The roasting was in N_2 and for the chromite also in O_2. In the latter case the reaction takes place at the same temp. as in N_2 and $MCrO_4$ is formed. The spinel reactions are simple double decompns. except for the Co compd. in O_2, which also gives Co_2O_3. The temps. are comparable with those for the silicates, except in that the table shows less difference between SrO and CaO in the Zn spinel series and the unusually high figure of 760° for a $CuO \cdot Al_2O_3$. A. R. Ross

Synthetic spinels. Ekbert Lederle and Rodolf Brill (to I. G. Farbenind. A.-G.). U. S. 2,122,180, June 28. See Fr. 824,640 (*C. A.* 32, 6016[2]).

Production of synthetic gems. E. H. Kraus. *Am. Mineral.* 22, 206(1937).—A description of certain phases of manufacturing processes and the characteristic properties of synthetic ruby, sapphire, spinel and emerald. B. C. P. A.

Fluoride as flux. L. Vielhaber. *Emailwaren-Ind.* 15, 311-13(1938).—Because of the scarcity of borax in Germany, other flux substitutes are being tested. Fluorides have a greater fluxing action than the alkalies. CaF_2 does not have the same fluxing action as Na_3AlF_6. Andrews, who studied the effect of fluorides on the deformation temp., explains that (1) the more Na_3AlF_6 is replaced by CaF_2, the higher the deformation temp. becomes; (2) even if results are dependent on the compn. of the batch, the hypothesis is correct that it must be possible to obtain a reduction in the deformation point by the simultaneous use of more fluorides: Na_3AlF_6, Na_2SiF_6 and CaF_2; (3) the proportion in which these 3 substances are present is important. Expansion, opacity and batch compn. are discussed. Conclusion: A formula with low borax content can be detd. which uses fluorides and which will have satisfactory properties and be easily fusible. M. V. Condoule

Effect of the addition of salt vapor on the synthesis and the crystal growth of spinel. Tôkiti Noda and Masatosi Hasegawa. *J. Soc. Chem. Ind., Japan* 43, Suppl. binding 72-3(1940).—The formation of spinel (1) from powd. MgO and Al_2O_3 by heating in the presence of alkali and alk. earth salt vapors in a stream of N_2, at 1300° for 3 hrs., was increased 10-24%. Max. yields were obtained with NaCl. $MgCl_2$, $CaCl_2$ and NaCl helped to increase the crystal size from 1.5 μ to 2-3 μ. Although AlF_3, NH_4F and NaF induced large crystal formation, I was not pure, but was surrounded by layers of fluorides. George Pappa

Reaction in the solid state at higher temperatures. VII. The reaction between magnesium oxide and aluminum oxide in the solid state. Yasuo Tanaka. *J. Chem. Soc. Japan* 62, 477-9(1941); cf. *C. A.* 35, 4654[8].—Two series of expts. were performed: (1) The 3 mixts. $MgO:Al_2O_3$ = 2:1, 1:1, 1:2 were heated at 1400° for 10 hrs. (2) The 2 mixts. $MgO:Al_2O_3$ = 1:1, 1:2 were heated at 1000° for 3 hrs. In both cases the free MgO in the reaction products was detd. and the x-ray diffraction pattern of the products was taken. The initial reaction product is always pure spinel irrespective of the ratio of the mixt. T. Katsurai

The ternary system $MgO-Al_2O_3-Cr_2O_3$. W. T. Wilde and W. J. Rees. *Trans. Brit. Ceram. Soc.* 42, 123-33 (1943).—A comprehensive study of the system of refractory oxides, $MgO-Al_2O_3-Cr_2O_3$, established or confirmed the following facts: (1) The binary system Al_2O_3-Cr_2O_3 shows complete solid soln., with no complicating factors. The precise position of the solidus and liquidus phase boundaries remains to be detd. The suggestion that the usually observed m. p. of 2060-2080° is due to the formation of a lower oxide has been disproved by the demonstration that when reduction occurs, Cr metal is obtained in equil. with the sesquioxide. (2) The binary system $MgO-Al_2O_3$ possesses only one compd., $MgO.Al_2O_3$, which can take a considerable amt. of alumina into solid soln. at high temps. No evidence has been obtained of any solid soln. of magnesia in $MgO.Al_2O_3$. It has been shown that alumina is pptd. from spinel-alumina solid soln. when cooling is slow. (3) The binary system $MgO-Cr_2O_3$ possesses one compd., $MgO.Cr_2O_3$. It has been shown that whatever solid soln. of MgO or Cr_2O_3 does occur, it is negligible in furnace-cooled specimens. On the basis of a thorough x-ray investigation of this part of the system it has been concluded that no stable compd. of the formula $4MgO.Cr_2O_3$ exists. (4) In the high- and the low-magnesia portion of the ternary system the lattice dimensions of the spinel compds. appear to depend solely on the relative proportions of Cr oxide and Al oxide present. The diffuse nat of the pattern of the rhombohedral phase in the low-magnesia portion of the system suggests that pptn. in the solid state may be taking place as in the $MgO-Al_2O_3$ binary, but this cannot be taken as fully proved. A complete series of solid solns. is formed between $MgO.Al_2O_3$ and $MgO.Cr_2O_3$. The series is not completely regular and suggestions have been put forward to explain the irregularities. No ternary compds. are formed. Bibiliography. H. F. K.

Active magnesia. II. Adsorption of fluoride from aqueous solutions. Albert C. Zettlemoyer, Earl A. Zettlemoyer, and Wm. C. Walker (Lehigh Univ., Bethlehem, Pa.). *J. Am. Chem. Soc.* 69, 1312-15(1947); cf. *C.A.* 41, 1140.—Studies of the adsorption of fluoride ion from solns. of NaF on a series of activated magnesias showed that the rates of fluoride adsorption and of hydration increased with increasing surface area for powdered magnesia. However, no correlation was found between surface areas and the equil. amounts of fluoride ion adsorbed. Paul H. Emmett

The growth of barium titanate crystals. B. Matthias (Massachusetts Inst. of Technol., Cambridge). *Phys. Rev.* 73, 808-9(1948); cf. *C.A.* 42, 1777*b*.—To prep $BaTiO_3$ crystals, melt 1 mole $BaCl_2$, 0.33 mole $BaCO_3$, and 0.26 mole TiO_2 (50, 25, and 5 g., resp.) in Pt or C in an atm. of N: cool the melt from 1200° to 800° within a few hrs. Dissolve the $BaCl_2$ in water, and sep. the excess $BaCO_3$. With a larger amt. of $BaCO_3$, hexagonal and monoclinic crystals, besides small cubic ones, are obtained. A discoloration caused by Pt is partially removed by heating at 200° for a few hrs. Reduction of TiO_2 by C gives bluish crystals: the crystals are decolorized by heating in O at 600-800°. G. M. Petty

Reaction between solids. H. C. Castell, S. Dilnot and Mary Warrington. *Nature* 153, 653-4(1944).—The formation of spinel, $MgAl_2O_4$, from MgO and α-Al_2O_3 was investigated at temps. above 1000°. This reaction is probably characteristic of others encountered in the ceramic and refractory industries, and of the production of metals from their oxides by reduction with Al. Theoretically spinel should be formed faster in a reducing atm. or *in vacuo* than in air. Briquets contg. finely powdered MgO and α-Al_2O_3 were heated 1 hr. at 1000-1150°, and the spinel content was detd. by x-ray (Cu $K\alpha$) analysis. The briquets which contained 5% Mg (metal) were heated *in vacuo*: they all showed a higher content of spinel than those without metallic Mg, which were heated in air at atm. pressure. At 1150°, the spinel formation was 65% and 20%, resp. G. M. Petty

Apparatus for manufacturing synthetic crystals. General Electric Co. Ltd. and Kenneth W. Brown. Brit. 661,696, Nov. 28, 1951. An app. for making multicolored synthetic crystals of corundum in rod form is described and illustrated. A sep. container for each material, e.g. Al_2O_3 (I) for white, I plus Cr oxide for red, or I plus Fe and Ti oxides for blue, is contained in a chamber through which O is fed to an O-H burner below which the crystal is formed. Each container has a fine screen at the bottom, and feeding from it is actuated by a vibrator. In operation a change from one color to another is made without interrupting crystallization. Edward S. Hanson

Spinel produced by the sintering reactions between basic oxides and alumina. Goro Yamaguchi (Tokyo Univ.). *J. Ceram. Assoc. Japan* 61, 594-9(1953).—Various mixts. of MgO, CoO, NiO, CuO, ZnO, MnO, and Al_2O_3 were heated to 900-1700° and the formation of spinel was studied by the x-ray powder method. Spinel is most easily formed in NiO and with difficulty in MnO. Intermediate are MgO, CoO, and ZnO, while CdO and CaO do not form spinel. K. Yamasaki

The system Al_2O_3-Cr_2O_3 and the red color of ruby. Erich Thilo and Jochen Jander (Humboldt-Univ., Berlin). *Forschungen u. Fortschr.* 26, 35(1950); *Chem. Zentr.* 1951, II, 649; cf. *C.A.* 45, 3217a, 6973c.—Cr is trivalent in all Al_2O_3-Cr_2O_3 mixed crystals. Artificially produced mixed crystals of this kind show the pure red color of ruby only up to a Cr_2O_3 content of about 8%. As the Cr content is increased above this value, the color gradually changes to green. The lattice consts. lie between a = 4.76 and c = 13.01 A. for Al_2O_3 and a = 4.93 and c = 13.51 A. for Cr_2O_3. The change in the lattice consts. begins with the appearance of the green color. The d. increases sharply in the red region and thereafter increases slowly. Both the magnetism curve and that showing the reducibility of the Cr with H_2 show discontinuities at 8% Cr_2O_3. Up to 7.2 mol. % Cr_2O_3 each Cr atom is surrounded by Al atoms only, while beyond this concn. Cr-Cr bonds must appear. The break which the phys. properties of the mixed crystals show at about this compn. is thus traceable to the appearance of electron bridges between adjacent Cr atoms. This must also account for the color and the cond. of pure Cr_2O_3. M. G. Moore

Solubility of α-alumina in flux on firing of corundum ceramics. I. A. Bulavin. *Sbornik Nauch. Rabot. po Khim. i Tekhnol. Silikatov* (Moscow: Gosudarst. Izdatel. Lit. po Stroitel. Materialam) 1956, 258-63; *Referat. Zhur., Khim.* 1957, Abstr. No. 31472.—Study of the soly. of Al_2O_3 in melts of the ternary systems BaO-CaO-SiO_2, BaO-MgO-SiO_2, BaO-SrO-SiO_2, which constitute the basis of vitreous phase of corundum, clinoenstatite, and other varieties of tech. ceramics. Melt mixts. were prepd. by fritting of carbonate salts and pure finely-ground quartz, washed with HCl and having a particle size of <60 μ. Addns. of electro corundum (contg. 98.5% Al_2O_3) were incorporated in amts. of 10-50%. Primary fusion of the frits and secondary fusion with added Al_2O_3 were carried out in a Silit furnace, at 1450-1550°, for 7 hrs., the cooling proceeded either in the furnace or in water. Microscopic and x-ray methods were used to det. the amt. of Al_2O_3 satg. the vitreous phase under varying conditions of firing and cooling. In fluxes of the BaO-CaO-SiO_2 system, 10-35% Al_2O_3 can be dissolved without sepn. of corundum crystals on slow cooling; in the BaO-MgO-SiO_2 system, a region of vitreous phases has been delineated, which underwent crystn. with a 5-10% content of Al_2O_3. Al_2O_3 is slightly sol. in flux of the BaO-MgO-SiO_2 and of the BaO-SrO-SiO_2 system. J. J. G.

Synthetic gems. Deutsche Gold- und Silber-Scheideanstalt vorm. Roessler (Gustav Jaeger and Fritz Ahrens, inventors). Ger. 1,002,299, Feb. 14, 1957 (Cl. 12m, 6). To a powd. spinel or a mixt. of 67-77 parts Al_2O_3 and 33-23 parts MgO, 0.5-5.0% metal oxides, e.g. CoO, Fe_2O_3, CuO, MoO_3, Cr_2O_3, MnO_2, NiO, V_2O_5, TiO_2, U_3O_8, or Bi_2O_3, are added. After pressing and sintering at 1400-1950°, clear colored products are obtained. Wilhelm Eschenbach

The interactions in the Na_2O-Al_2O_3-MgO system at 1200°. A. S. German-Galkina. *Trudy Vsesoyuz. Nauch.-Issledovatel. Alyumin.-Magn. Inst.* 1957, No. 40, 25-31.—The interaction of the components of a mixt. corresponding to the system Na_2O-Al_2O_3-MgO was studied under isothermal conditions at 1200°. Mixts. of various compns. (having a ratio of Na and Al oxides corresponding to Na aluminate (I) or spinel) were investigated. After 2 hrs. of calcination the products were analyzed. In the course of calcination at 1200° of mixts. corresponding to the Na_2O-Al_2O_3-MgO system having different amts. of Na_2O, the latter reacted with Al_2O_3 to form I. In mixts. with a stoichiometric amt. of Na_2O for I, no spinel was formed, owing to the reaction of replacement of MgO by Na_2O from the spinel. Spinel is formed in small amts. at 1000°, whereas at 1200° the MgO is displaced from the spinel by Na_2O. No ternary compds. were found in the investigated mixts. From *Referat. Zhur., Met.* 1958, Abstr. No. 11496. K. L. C.

Liquid sintering of corundum ceramics. P. P. Budnikov, I. A. Bulavin, and I. A. Zakharov (D. I. Mendeleev Chem.-Technol. Inst., Moscow). *Nauch. Doklady Vysshei Shkoly, Khim. i Khim. Tekhnol.* 1958, No. 1, 168-72. The dependence of the sintering of corundum ceramics on the compn. and the quantity of the liquid phase formed in the calcination process was studied. The fluxing agents used for the formation of the liquid phase were taken from the systems $CaO.SiO_2.Al_2O_3$ and $CaO.BaO.SiO_2$ and were introduced into the mass in powd. form, which permitted a uniform process of formation of the liquid phase. It is shown that during a sintering without crystn., 40% of liquid phase is necessary in order to obtain corundum ceramics (with grain size from 0 to 50 μ) with a min. porosity, independently of the difference in the compn. of the initial fluxing agents, in the calcination temp., and in the amt. of Al_2O_3 dissociating in the primary fusion. For higher values of the liquid phase, when the sintering is continued about 3 hrs., a swelling and a deformation of the samples occur, which are characteristic of the overfiring condition. A min. porosity is attained in the case of coarser-grained corundum (60-80 μ) at a 45% formation of the liquid phase. At >45%, the filtration of the fusion from the sample to the bottom occurs. It is shown that in rigorously similar conditions, the rate of pptn. of the sample from the mass depends on the compn. of the forming fusion. In all cases the pptn. begins quite unexpectedly, and during the first 10-20 min. it takes place very intensely. The sintering rate of the corundum mass with different fluxing agents depends on the viscosity of the primary fusion and the variation of the relative viscosity and the surface tension upon further soln. of Al_2O_3 in the fusion. Jean Plamondon

Effect of the addition of barium oxide on the phase composition of basic refractories. M. Grylicki and F. Nadachowski. *Prace Inst. Hutniczych* 10, 243-54(1958)(English and Russian summaries).—A phase equil. of the ternary system: $2BaO.SiO_2$-$2CaO.SiO_2$-$2MgO.SiO_2$ (I) is studied, with particular emphasis on the binary systems $2MgO.SiO_2$-$2BaO.SiO_2$, and $2CaO.SiO_2$-$2BaO.SiO_2$. BaO expells CaO and MgO from their compds. and forms 5 compds.: *$BaO.3MgO.2SiO_2$, $BaO.MgO.SiO_2$, $BaO.2CaO.MgO.2SiO_2$, $5BaO.3CaO.4SiO_2$*, and $2BaO.SiO_2$. A discontinuity exists in the solid solns. of $2BaO.SiO_2$ and $2CaO.SiO_2$. Fe_2O_3 does not react with any phase of the system $2BaO.SiO_2$-$2CaO.SiO_2$-$2MgO.SiO_2$ if there is an overdose of periclase, and combines only with MgO, forming a solid soln. MgO + $MgO.Fe_2O_3$. On the contrary, Al_2O_3 partly forms a spinel $MgO.Al_2O_3$, and partly $BaO.Al_2O_3$. Ten combinations are given of coexisting phases of the system MgO-BaO-CaO-SiO_2-Al_2O_3-Fe_2O_3 with an overdose of free MgO. The addn. of BaO to basic refractories increases their m.p.: $BaO.MgO.SiO_2$ has a m.p. 130° and $2BaO.SiO_2$ 300° higher than $CaO.MgO.SiO_2$. By choosing a right combination, refractories m. 1820° are obtained. L. G. Manitius

Mineral formation by reaction of chrome spinels with magnesium oxide at high temperatures. L. I. Karyakin and K. N. Repenko (All-Union Sci.-Research Inst. Refractories, Kharkov). *Trudy 5-go [Pyatogo] Soveshchan. Eksptl. i Tekh. Mineral. i Petrog., Akad. Nauk S.S.S.R., Inst. Khim. Silikatov, Leningrad* 1956, 382-94(Pub. 1958).—A study was made of the reactions occurring upon heating of chrome spinels at high temps. with MgO. Chromite ore and the chrome spinel sepd. from it, with and without addn. of MgO, were heated to 1600, 1800, and 1870° in an atm. of air and N, and to 1900° in an atm. of air. A microscopic examn. showed that with an increase in the temp. of heating the grain size of the chrome spinel and the no. of transparent grains increase. Samples were prepd. from chrome spinel with the addn. of 5, 10, 30, 50, or 79% MgO, and were cooled slowly and rapidly. Microscopic, chem., and x-ray methods were also used in studying the alterations occurring upon heating chrome spinel with and without MgO. 20 references. Gladys S. Macy

Single crystals of ferrites. Paul M. Hamilton (to Monsanto Chemical Co.), U.S. 3,115,469 (Cl. 252-62.5), Dec. 24, 1963, Appl. June 22, 1959; 2 pp. $BaO.6Fe_2O_3$ single crystals are grown by slowly cooling a soln. of an Fe_2O_3 in molten $BaCl_2$ from 1200-1350° to room temp. Crystal size varies from 0.2 μ to 3 mm. depending on the cooling rate. T. C. MacAvoy

The interaction of chromite with magnesium oxide during [kiln] firing. S. M. Zubakov. *Ogneupory* 25, 275-80 (1960); cf. *CA* 50, 10361*f*, 10362*a*, 53, 8566*b*.—Results obtained in the study of the interaction of Saranovsk chromite ores of the Kimpersaisk deposits with MgO in coarse and finely ground conditions at temps. up to 1700°, followed by slow cooling, are summarized. In the coarsely ground mass (the chromite with 1-3 mm. grains and the periclase with 1-0 mm.) and at high temps., a diffusion process of exchange takes place. From the chromite grains to the periclase on the one hand migrate Fe oxides and silicates, and from the periclase to the chromite diffuses MgO. Highly significant changes taking place during the firing are observed in mixts. of chromite with spinels, oxides, and silicates where the spinel has the formula $nRO.R_2O_3.mR_2O_3$ and the ratio of R_2O_3:RO lies within the limits of 1.169 and 1.777. The diffusion of oxides from the coarse grains of chromite to the periclase proceeds with the formation in the reaction zone of a series of new compds.: magnesioferrites, spinels of complex compn., forsterite, and glass. Out of contact with the grains of chromite, the periclase loses its light brown color and at the same time its *n* changes from >1.78 to its normal value. In the finely ground mass (grain size <0.06 mm.), the reaction goes nearly to completion to form a sinter more chemically and mineralogically homogeneous than the chrome-magnesite products with their zonal structure and highly heterogeneous compns. The principal phases are (*a*) a modified chrome-spinel with a heterogeneous cryst. structure whose predominant components are the magnesian spinels $MgO.Cr_2O_3$ and $MgO.Al_2O_3$, and large amts. of the Fe spinels $MgO.Fe_2O_3$ and $FeO.R_2O_3$; (*b*) periclase with the normal parameters of the cubic crystal lattice, but with variable *n*s. New compds. formed are (*a*) secondary spinels with the formula $Mg_x Fe^{++}(Fe^{+++} + Cr^{+++}, Al)_2O_4$, from which is developed $MgO.Fe_2O_3$, analogous to the $MgO.Cr_2O_3$ and $MgO.Al_2O_3$, which are the basic conversion products due to firing of chrome-spinel; (*b*) forsterite, and glass containing cryst. monticellite and merwinite, a Ca Mg orthosilicate. H. L. Olin

Single-crystal synthetic garnets. James W. Nielsen (to Bell Telephone Laboratories, Inc.). U.S. 2,957,827, Oct. 25, 1960. From a 3-phase system consisting of PbO, Fe_2O_3, and Y_2O_3 "garnets" are synthesized from a mixt. of PbO 80, Fe_2O_3 70, and Y_2O_3 3.5 g. (heated in a Pt crucible for 5 hrs. at 1350°). Cooling at 1-5°/hr. is recommended before removal from the furnace. Other oxides such as Sm_2O_3, Gd_2O_3, or Er_2O_3 can be substituted for Y_2O_3. Crystals ranging from 1-10 mm. in size form. Prepn. of $Sm_3Fe_5O_{12}$, $Gd_3Fe_5O_{12}$, $Y_3Fe_5O_{12}$, and $Er_3Fe_5O_{12}$ is described; as well as crystals of a YFe garnet contg. Ga substituted in part for the Fe. A. E. Alexander

Some reactions in the Li_2O-B_2O_3-Al_2O_3 system, with regard to the sintering of corundum in the presence of lithium boron flux. Miloslav Bartuška. *Silikáty* 4, 147-64 (1960).—Reactions between Al_2O_3 and lithium-boron flux for sintering of Al_2O_3 in the presence of a liquid phase were studied. Flux contg. 58.1% B_2O_3 and 41.9% Li_2O melts at ≥600°. When H_3BO_3 is fused with corundum at a ratio 12.7% B_2O_3:87.3% Al_2O_3 a compd. $2B_2O_3.9Al_2O_3$ is formed at 1200-50°. The compds. $Li_2O.Al_2O_3$ and $Li_2O.5Al_2O_3$ are formed when Li_2CO_3 reacts with corundum at a ratio Li_2O:Al_2O_3 up to 1:5. Spinel is formed partly from its components and partly by the secondary reaction between $Li_2O.Al_2O_3$ and free Al_2O_3 and it is enhanced by the presence of F^-. In the ternary Li_2O-B_2O_3-Al_2O_3 system, consisting of 80% corundum and 20% Li-B melt, spinel $Li_2O.5Al_2O_3$ is formed at 650° and the reaction is completed at 1000°. A small quantity of a byproduct $2B_2O_3.9Al_2O_3$ is formed at >900°. The samples, pressed at 1130 kg./sq. cm., sinter 150° lower than would be apparent from the dehydration curve. The spinel is formed in hypidiomorphic crystals, free of pseudomorphoses of primary corundum. The study of the reaction between Al_2O_3 and the Li-B flux indicates that the Li_2O-B_2O_3-Al_2O_3 system is not suitable as a model for the sintering study in the presence of fluxes. C. Weiner

Growth of single crystals of synthetic garnets, ferrites, and orthoferrites. Western Electric Co. Inc. Brit. 912,799, Dec. 12, 1962, U.S. Appl. May 13, 1960; 8 pp. To the usual flux of PbO for growing single crystals is added B_2O_3. This increases the soly. of the oxides from which the single crystals are formed, and thus increases the yield and the size of the crystals obtainable. For max. soly. and min. borate formation, 1 part B_2O_3 to 10 parts PbO is used for garnets and 1 to 20 for spinels and orthoferrites. B. A. Landry

Industrial spinels prepared by the reaction sinter process. Gustl Strunk-Lichtenberg. *Fortschr. Mineral.* 39, 49-53 (1961); cf. Meyer-Hartwig, *Ber. deut. keram. Ges.* 33, 85-91 (1956).—Prepn. of solid solns. of the series $MgAl_2O_4$-$MgCr_2O_4$ is described, and a graph is given of the variation with compn. of the unit-cell size in the series. Michael Fleischer

Controlling the conditions of direction of crystallization in growing $Y_3Fe_5O_{12}$ crystals. V. A. Timofeeva and R. A. Voskanyan. *Kristallografiya* 6, 796-9(1961).—The possibility of control of the direction of growth of $Y_3Fe_5O_{12}$ crystals was investigated by thermographic studies of the system PbO-PbF_2-$Y_3Fe_5O_{12}$. In 1:1 mixts. of PbO-PbF_2, 40% $Y_3Fe_5O_{12}$ dissolved at 1300°. Rapid cooling crystd. $Y_3Fe_5O_{12}$ at 1100°; a layer of fine crystals was formed on the surface of the molten soln. A single-crystal layer of I might serve as a crystn. seed. A soln. supersatd. at 1260-80° by the addn. of $Y_3Fe_5O_{12}$ to a satd. soln. cooled quickly by 30-40° formed a thin film of cryst. $Y_3Fe_5O_{12}$. Continuing cooling at the rate of 2-3°/hr. to 1100° grew crystals only in the rhombic dodecahedron plane up to 8-10 mm. I. Bencowitz

Reaction kinetics of solid aluminum and magnesium oxides in the formation of spinels. Jan Hlavac (Chem. Technol. Hochschule, Prague). *Proc. Intern. Symp. Reactivity Solids, 4th, Amsterdam* 1960, 120-37(Pub. 1961)(in German). The reactinn kinetics of the solid oxides were investigated at 950-1300°. The data followed the rate equation for diffusion in solids published by Serin and Ellickson (*CA* 35, 7782°). The activation energies were: α-Al_2O_3 107 and γ-Al_2O_3 82 kcal./mol. The difference in the activation energies of α- and γ-Al_2O_3 were explained on the basis of the different products formed in these reactions. The kinetics data of the reaction in the case of a simultaneous crystallographic inversion of the γ into the α-modification deviated from the rate law for diffusions into spheres. No increase of reactivity was observed. Rudolf G. Frieser

Method of growing barium titanate single crystals in potassium fluoride flux. Shigeru Waku (Nippon Telegraph & Telephone Public Corp., Tokyo). *Kogyo Kagaku Zasshi* 63, 2094-2100(1960). Crystals for matrix memory elements were grown from a Pt crucible of about 840 cc. capacity. The no. of butterfly-type twins, the growth rate of the crystal plate in the *a*- and *c*-axis directions, and the uniformity of the thickness of the crystal plate were affected considerably by the heating conditions of the crucible during the melting period. The no. of such twins and the growth rate in the direction of the *a* axis increased, for the same cooling rate, with increase in ΔT between the bottom and top of the crucible and the fluctuation of temp., T. In the *c*-axis direction, the reverse was true. CA

Discussion on the crystal growth of barium titanate single crystal in KF flux fusion. Shigeru Waku. *Rev. Elec. Commun. Lab.* (Tokyo) 10. Nos. 1-2, 1-19(1962). Seeds of butterfly twins are found in the residual powders of $BaTiO_3$ raw materials. The cause of the rapid growth of the [110] dendrite is the presence of a pair of parallel (111) twin planes closely spaced. The existence of this pair of (111) twin planes was confirmed by orthoscopic observation under crossed Nicols in extinction position and chem. etching of the cross-section. Similarly, the cause of the rapid growth of the small-angle butterfly twin is the presence of a pair of parallel (111) twin planes parallel to one of the two [111] twin planes of this twin. Existence of this pair of (111) twin planes was confirmed by electron microscopy. C. A. Pinkhaus

Growth of yttrium aluminum garnet single crystals. R. C. Linares (Bell Telephone Labs., Murray Hill, N.J.). *J. Am. Ceram. Soc.* 45, 119-20(1962).—Single crystals of $Y_3Al_5O_{12}$ can be grown from molten $PbO\text{-}xB_2O_3$ solns., where x is between 0 and 0.36 mole. The field of stability of $Y_3Al_5O_{12}$ widens with increasing concn. of B_2O_3 in the solvent. Fe can be substituted for various proportions of the Al. J. C. Tallman

Growth of yttrium iron garnet from molten barium borate. R. C. Linares (Bell Telephone Labs., Murray Hill, N.J.). *J. Am. Ceram. Soc.* 45, 307-10(1962). $Y_3Fe_5O_{12}$ garnet can be grown from solns. of $Y_2Fe_2O_{12}$ and molten $BaO.xB_2O_3$. This solvent system has low vapor pressure, low d., and low corrosiveness. The amt. of Fe in the crystd. phase increases with the amt. of B_2O_3 in the solvent. Ba may be replaced with Na, K, Pb, Ca, and Sr; and B_2O_3 may be replaced with V_2O_5. J. C. Tallman

Growth of refractory oxide single crystals. R. C. Linares (Bell Telephone Lab., Incorp., Murray Hill, N.J.). *J. Appl. Phys.* 33, 1747-9(1962). Various refractory oxides can be crystd. from molten $PbO\text{-}PbF_2$ and $Bi_2O_3\text{-}BiF_3$ solns. The $PbO\text{-}PbF_2$ solvent has proved successful for the growth of high-alumina compds. including Al garnets, rare earth or thioaluminates, spinels, magnetoplumbite-type aluminates, Al oxide, and the bivalent oxides BeO and MnO. The $Bi_2O_3\text{-}BiF_3$ system was used for the growth of the ferrite $GdFeO_3$. The stability ranges of these various compds. is discussed in addn. to problems of doping and attainment of large single crystals. CA

Growth of yttrium iron garnet on a seed from a molten salt solution. R. A. Laudise, R. C. Linares, and E. F. Dearborn (Bell Telephone Lab., Inc., Murray Hill, N.J.). *J. Appl. Phys.* 33, 1362-3(1962). Y Fe garnet was crystd. on a seed crystal from molten $BaO.xB_2O_3$, where x is 0.61. Two methods were used: (*1*) slow cooling of a melt in which a rapidly rotating seed was suspended, and (*2*) growth in a temp. gradient where excess Y Fe garnet was maintained in a hotter part of the system, and a rapidly rotating seed was suspended in a cooler region. The geometry of the furnace, crucible baffle, stirrer, and circulator system required to produce controlled growth in each of these systems is described, and the nature of the rate-limiting step in each of the systems is discussed. The dependence of growth rate in the [110] direction on stirring rate, cooling rate, and solvent wt. is presented. Good quality growth with rates as high as 50-75 mil/day was achieved in favorable cases. CA

Growth of single-crystal $MgGa_2O_4$ spinel from molten $PbO\text{-}PbF_2$ solutions. Edward A. Giess (Thomas J. Watson Res. Center, Yorktown Heights, N.Y.). *J. Appl. Phys.* 33, 2143 (1962). Single crystals weighing 1-2 g. each have been grown by a technique similar to that developed by Nielsen (*CA* 55, 43c). The best spinel-producing compn. is 12 mole % MgO, 8 Ga_2O_3, 40 PbO, and 40 PbF_2. Cryst. products are composed principally of Pb_2OF_2, acicular MgF_2, and octahedral $MgGa_2O_4$. Molten solns. of $MgO:Ga_2O_3$ = 12:8 moles produced crystals with a 8.284 A. Solns. of $MgO:Ga_2O_3$ = 8:12 moles yielded crystals with a 8.283 A. Liberty Casali

Kinetics of the solubility of aluminum in molten fluoride salts. P. M. Shurygin, V. N. Boronenkov, and V. I. Kryukov. *Izv. Vysshikh Uchebn. Zavedenii, Tsvetn. Met.* 5, No. 3, 50-66(1962). The rate of soln. of α-alumina as detd. by a rotating sample with equally accessible surfaces in molten fluorides is restricted by diffusion. The diffusion coeff. is of the order of 10^{-5} sq. cm./sec. and changes with the compn. of the melt. Cryolite has the highest diffusion energy of activation of all the constituents of the electrolyte: E_D = 28,100 cal./mole. The Stokes-Einstein equation is not applicable for $NaF\text{-}AlF_3$ melts, but is suitable for the system $3NaF.AlF_3\text{-}CaF_2$. 17 references. Evan N. Davidenko

Single crystals of oxide garnets, orthoferrites, and ferrites. Joseph P. Remeika (to Bell Telephone Laboratories, Inc.). U.S. 3,079,240 (Cl. 23-301), Feb. 26, 1963, Appl. May 13, 1960; 5 pp. Single crystals of garnets, orthoferrites, and ferrites are grown in a flux comprising PbO and B_2O_3. The garnets are $M_3M'_5O_{12}$ or $M_3M'_2(M'O_4)_3$; M is yttrium or one of the rare elements of at. no. between 62 and 71 or a mixt. of these rare elements with each other or Y; M' is trivalent iron or trivalent iron mixed in part with Ga, Al, Sc, Cr, or Co, M' may in general be a trivalent metal. To prep. garnets, weighed amts. of M_2O_3, M'_2O_3, PbO, and B_2O_3 (ratio of B_2O_3 to PbO preferably 1:10) are heated at 1300° for 8 hrs., cooled at the rate of 2°/hr. to the re-solution temp., the liquid is poured off, and the crystals remaining in the crucible are permitted to cool to room temp. in about an hr. The flux residue is removed from the crystals by dil. HNO_3, and the crystals are washed with boiling water and air-dried at room temp. Thus prepd. were $Y_3Fe_5O_{12}$, $Gd_3Fe_5O_{12}$, $Gd_3Ga_5O_{12}$, $Yb_3Fe_5O_{12}$, $(Y,Er)_3Ve_5O_{12}$, and $Y_3(Ga_{4.45}Fe_{0.45})O_{12}$. The rare earth metal orthoferrites and the ferrites are preferably prepd. with a flux ratio of 1:20. Thus prepd. were $YFeO_3$, $LaFeO_3$, and $HoFeO_3$, $NiFe_2O_4$, $MgFe_2O_4$, and $Mg(Al,Fe)O_4$. M. G. Huguet

Growing crystals of corundum from solutions of molten lead fluoride. V. A. Timofeeva and R. A. Voskanyan. *Kristallografiya* 8, 293-6(1963); cf. *CA* 56, 9514b. The sol'y. of Al_2O_3 in PbF_2 increased from a fraction of a percent at 888° to 49% at 1280°. Crystals of corundum grown from PbF_2 at 1200-1300° exhibited a pinacoid plane (0001) and 2 rhombohedral planes (1011) and (2021). In the presence of Cr_2O_3 as an impurity the crystal was red colored. The pinacoid plane, growing at the slowest rate, absorbed most of the Cr_2O_3, concg. the color in the center of the crystal. In rapidly grown crystals 12-faced pyramids perpendicular to the basal direction were clearly developed. Thin plates, up to 1 sq. cm., formed from the vapor phase in the upper part of the crucible or on the cover. These were pinacoid planes, homogeneous, free of impurities, with an ideally even surface. GBJR

Corundum crystals. General Electric Co., Ltd. (by Eric A. D. White). Brit. 935,390, Aug. 28, 1963, Appl. Dec. 20, 1960; 4 pp. A method of manufg. corundum crystals which comprises melting up to 85 mol. % of PbF_2 mixing in powdered Al_2O_3, heating the mixt. to 1150-1300° in a closed vessel which is evacuated during the heating process, cooling the soln. at a rate of 1-2° per hr. to the m.p. of PbF_2 and thereafter more rapidly to room temp. The mixt. of PbF_2 and Al_2O_3 may be colored with chromate or dichromate ions and may be seeded with a corundum crystal to produce relatively larger crystals. C. J. Anorga

Role of P in growth of BeO single crystals. S. B. Austerman (Atomics Intern., Canoga Park, Calif.). *U.S. At. Energy Comm.* NAA-SR-8361, 16 pp.(1963). BeO single crystals were grown in molten $Li_2MoO_4\text{-}MoO_3$ as solvent flux. Addn. of P to the flux, in the form of $LiPO_3$, up to several percent caused unique crystal habit modifications. The extent of the modifications depends on flux compn., temp., and P concn. Generation of inclusions is markedly suppressed. P content in crystals was detd. by tracer methods. Werner E. L. Haas

Preparation of crystalline $BaTiO_3$ ingots from melts in an atmosphere of oxygen. E. V. Bursian and N. P. Smirnova (A. I. Gertsen State Univ., Leningrad). *Kristallografiya* 8(5), 799-[illegible](1963). Cryst. ingots of $BaTiO_3$ were prepd. in a specially-built 1800° furnace. The tendency to form a single crystal, during solidification of $BaTiO_3$, under a high temp. gradient, is pronounced, and, consequently, ingots of large sizes are single crystals or, at higher rates of cooling, polycryst. The dimensions of the ingots obtained (22 × 8 × 1 mm.) were limited by the dimensions of the furnace itself. The samples had ϵ = [illegible] ± [illegible] × 10^4 at a frequency of 50 cycles/sec. for an optimum field voltage, E = 2.8 kv./cm. at 20°. For low fields (0.1 kv./cm.), ϵ decreased by 1 order. The Curie point was (115 ± 2°); the value of ϵ at this point in a weak field (0.13 kv./cm.) was equal to [illegible]. The vol. electrocond. of the ingot was of the same order as the ceramics of the same compn. Jean Plamondon

Preparation of single crystals of yttrium-iron garnet in molten YF_3-PbF_2 solutions. Masao Sato and Shumpei Hukuda (Tokyo Inst. Technol., Japan). *Yogyo Kyokai Shi* 71(1), 5-8(1963). Stdy. data of Y_2O_3 in YF_3 were obtained by differential thermal analysis in Ar and those of Fe_2O_3 in PbF_2 in air by chem. analysis of quenched specimens. Mixts. of Y_2O_3 and Fe_2O_3 were dissolved in YF_3-PbF_2 at 1300-1350° and crystals of the so-called Y-Fe garnet, $Y_3Fe_5O_{12}$, were obtained by cooling the soln. at a rate of 4-16°/hr. K. Yamasaki

Garnets. James W. Nielsen (to Bell Telephone Laboratories, Inc.). U.S. 3,091,540 (Cl. 106-42), May 28, 1963, Appl. Aug. 25, 1959; 2 pp. Division of U.S. 3,050,407 (*CA* 57, 11525a). Single-crystal Ga Y garnets are prepd. in a Pt crucible at >1400°, by using a flux contg. PbF_2 and, in some cases, PbO. Small amts. of certain metal oxides, such as Cr_2O_3, Co_3O_4, TiO_2, MnO_2, NiO, or Fe_2O_3, are added to color the garnet. Thus, 24 g. Y_2O_3, 48 g. Ga_2O_3, 180 g. PbF_2, 160 g. PbO, and 2.5 g. Cr_2O_3 are heated 4 hrs. at 1250°, cooled at 1°/hr. to 950°, then allowed to cool to room temp. Contents are leached with a mixt. of dil. HNO_3 and AcOH to dissolve the flux. Garnet crystals are green. R. D. Gillen

Flux growth of chrysoberyl and alexandrite. E. F. Farrell and J. H. Fang (Mass. Inst. of Technol., Cambridge). *J. Am. Ceram. Soc.* 47(6), 274-6(1964). Crystals of chrysoberyl (Al_2BeO_4) (I) and alexandrite (Al_2BeO_4:Cr) (II) were grown in lengths from 0.1 to 10 mm. by the flux-melt method. Suitable starting compns. were, for I PbO 66.6, Al_2O_3 16.7, and BeO 16.7 mole %; for II Li_2MoO_4 40.4, MoO_3 50.6, Al_2O_3:Cr 4.5, and BeO 4.5 mole %. More work is required to produce large crystals of better crystallographic quality. J. C. Tallman

A new series of spinels of the selenides of yttrium, scandium, and rare earths. Micheline Guittard, Charles Souleau, and Hassen Farsam (Fac. Pharm., Paris). *Compt. Rend.* 259(17), 2847-9(1964)(Fr). The formation of spinels of formula ML_2Se_4, where M is Mg, Mn, or Fe and L is one of the rare earths, Y, or Sc, was investigated. Contrary to earlier work on ML_2S_4 (Patrie, *et al.*, *C.R.* 60, 154162), where Yb, Lu, and Sc were all found to form spinels with all 3 M's, and Tm with Mg and Mn only, no Fe spinels were found with Sc. Mg formed spinels with all but Dy, Mn only with Yb, Lu, and Sc. X-ray data show normal spinels with $u = 0.380 \pm 0.003$. S. Goldwasser

Growth of garnet laser crystals. Robert C. Linares (Perkin-Elmer Corp., Norwalk, Conn.). *Solid State Commun.* 2(8), 229-31(1964). Single crystals of garnets, $Gd_3Ga_5O_{12}$ (I) and $Y_3Al_5O_{12}$ (II), either pure or doped with other rare earths and Cr, were grown by the Czochralski technique at rates of ≤6 mm./hr. Crystals of I, 10 mm. by 40 mm. long, were easily grown in air from Ir crucibles. Air-annealing at 1450° for 64 hrs., followed by cooling to room temp. at 100°/hr., allowed their fabrication. If was grown in Ar atm. to avoid Ir vaporization and annealed in Ar, vacuum, or an O-gas atm. Crystals of I and of other Ga garnets when grown in Ar atm. were of poor quality, subject to severe cracking, and full of cloudy inclusions. I melted congruently in air at 1825° ± 25; however, in reducing or neutral (Ar) atm. it gave white fumes on melting, apparently due to redn. of Ga_2O_3. The garnets grown were generally very strong and suffered no ultraviolet damage during excitation. Laser action was observed in the crystals of $Gd_{3-x}Nd_xGa_5O_{12}$ at 1.0632 μ (air). The lasers exhibited very low threshold and low beam divergence. G. Aravamudan

Growth defects in flux-grown rubies. K. R. Janowski, E. J. Stofel, and A. B. Chase (Aerospace Corp., El Segundo, Calif.). NASA Accession No. N64-31635. Rept. No. AD 448467. Avail. CFSTI, 22 pp.(1964)(Eng). Ruby crystals of exceptional optical quality were grown from fluxes composed of Bi_2O_3 + PbF_2 or Bi_2O_3 + BiF_3. Careful control of growth conditions was required to minimize the no. of growth defects consisting primarily of dislocations, entrapped flux, and growth twins. Slow growth rates coupled with the addn. of small amts. of La_2O_3 as a flux dopant were helpful in producing nearly perfect crystals. Cr concns. up to 1% were incorporated into these crystals without adversely affecting their perfection. Crystals up to 10 mm. in diam. having as few as 1-10 dislocations per crystal were typical of those produced under optimum growth conditions. Under these same conditions, entrapped flux was eliminated, and growth twins were either eliminated or reduced to 1-3 twin boundaries per crystal. From *Sci. Tech. Aerospace Rept.* 2(23), 3448(1964). TCSL

Growth of oxide crystals by the flux method. Michael Scheiber (Harvard Univ.). *J. Am. Ceram. Soc.* 47(10), 537-8 (1964). Directions are given for the growth of large oxide crystals by the flux method, with emphasis upon the growth of $Sm_3Ga_5O_{12}$ by using PbO-PbF_2 as the flux. J. C. Tallman

Flux growth, Czochralski growth, and hydrothermal synthesis of $LiGaO_2$ single crystals. J. P. Remeika and A. A. Ballman (Bell Telephone Labs., Inc., Murray Hill, N.J.). *Appl. Phys. Letters* 5(9), 180-1(1964)(Eng). Optimum conditions for growth from a flux are given. Czochralski growth methods producing crystals ≤1.9 cm. in diam. and 5 cm. long are described. Hydrothermal growth of $LiGaO_2$ by using aq. solns. of LiOH and NaOH as the solvent yields larger single crystals. P. V. Cheney

Substitution of aluminum and gallium in single-crystal yttrium iron garnets. Robert C. Linares (Perkin-Elmer Corp., Norwalk, Conn.). *J. Am. Ceram. Soc.* 48(2), 68-70(1965). Single crystals of Y-Fe garnet with substitutions of Al and Ga were grown from fluxes by both the slow cooling and the gradient technique. Crystals grown by slow cooling were badly segregated with respect to Al and Ga contents, whereas gradient-grown crystals were very uniform. The gradient method permits holding the substitution coeff. of the substituting ion const. by keeping growth at a const. temp., by satg. the flux with respect to both the substituent and Fe, and by keeping an excess of nutrient of the desired compn. J. C. Tallman

Growth of rare earth scheelites by the flux method. Michael Schieber (Harvard Univ.). *Inorg. Chem.* 4(5), 762-3(1965) (Eng). By using the phase diagrams previously detd., rare earth-scheelite single crystals were grown in Pt crucibles by cooling from the annealing temp. at 0.5°/hr. The following crystals were grown: $SrMoO_4$, transparent, unit cell vol. 343.031 A.^{3}; $Sr_{0.9}Gd_{0.1}MoO_4$, yellow shade, 333.086; $Sr_{0.9}Eu_{0.1}MoO_4$, dark purple, 332.234; $Na_{0.4}Pr_{0.2}MoO_4$, deep green, 325.509; $Na_{0.4}Tm_{0.4}MoO_4$, yellow shade, 303.399; $Na_{0.4}Dy_{0.2}MoO_4$, light green, 307.455; $Na_{0.4}Dy_{0.2}TeO_4$, yellow green, 319.811; $Li_{0.4}Dy_{0.2}TeO_4$, yellow green, 309.372; and $Li_{0.4}Dy_{0.2}MoO_4$, green shade, 299.915. Charge compensation in the Sr-Gd and Sr-Eu materials is obtained by lower valency of Mo. The vol. contraction of the scheelite crystal increases with the at. no. of the rare earth ion. A. Leffler

Single crystal growth of transition metal oxides from polytungstate fluxes. W. Kunnmann (Brookhaven Natl. Lab. Upton, N.Y.), A. Ferretti, R. J. Arnott, and D. B. Rogers *J. Phys. Chem. Solids* 26(2), 311-14(1965)(Eng). Single crystals of $M^{II}Cr_2O_4$, $M^{II}Fe_2O_4$, where M^{2+} is a transition (or alk. earth) ion, and the garnet $Y_3Fe_5O_{12}$ were grown from the flux system $(1 - x)Na_2W_2O_7$-xNa_2WO_4, where $1 \geq x \geq 0$. In addn., single crystals of the system $Co_{1+\delta}V_{2-\delta}O_4$ (where $1 \geq \delta \geq 0$) were prepd. by electrolysis of CoO-V_2O_5 mixts. dissolved in a suitable Na polytungstate flux. The phase boundaries present in the $CoCr_2O_4$-$Na_2W_2O_7$-Na_2WO_4 system were detd. and a general discussion is made of a soln. process for transition metal oxides in a Na pyrotungstate flux that is formulated upon Lewis acid-base theory. RCKH

Composition diagrams for crystal growth from molten oxides. M. Schieber (Harvard Univ.). *J. Inorg. Nucl. Chem.* 27(3), 553-7(1965)(Eng). Compn. diagrams showing approx. boundaries in which various crystals can be grown were detd. in several systems for several heating temps. These systems include MoO_3-Ga_2O_3-Sm_2O_3, PbO/PbF_2-Ga_2O_3-Sm_2O_3, PbO/Pb-F_2-Fe_2O_3-Sm_2O_3, B_2O_3-Fe_2O_3-Li_2O, and MoO_3-Gd_2O_3-Na_2O. RCJX

Van Uitert, L. G., Grodkiewicz. and Dearborn, E. F., "Growth of Large Optical-Quality Yttrium and Rare-Earth Aluminum Garnets." J. of The American Ceramic Society, Vol. 48, No. 2, February 1965.

An improved flux consisting of PbO-PbF_2 and B_2O_3 was developed for the growth of garnets. Rare-earth aluminum garnet crystals weighing in excess of 100 g and modified yttrium aluminum garnet crystals weighing up to 60 g were obtained using this flux. Lead contamination was reduced to noncritical levels in these crystals by working with large excesses of Al_2O_3 in the melt. Excellent optical quality has been produced as indicated both by visual examination and by outstanding laser performance.

Unclassified

Security Classification

DOCUMENT CONTROL DATA - R&D

(Security classification of title, body of abstract and indexing annotation must be entered when the overall report is classified)

1. ORIGINATING ACTIVITY (Corporate author) American Science and Engineering 11 Carleton Street Cambridge, Massachusetts 02142	2a. REPORT SECURITY CLASSIFICATION Unclassified 2b. GROUP

3. REPORT TITLE

INVESTIGATION OF THE VARIABLES CONTROLLING THE FLUX GROWTH OF HIGH QUALITY LASER CRYSTALS

4. DESCRIPTIVE NOTES (Type of report and inclusive dates)

Final Scientific Report Period Covered 20 August 1965 - 19 August 1966

Approved 4/17/67

5. AUTHOR(S) (Last name, first name, initial)

Cobb, Carolus M., Wallis, Elbridge B.

6. REPORT DATE 27 March 1967	7a. TOTAL NO. OF PAGES 171	7b. NO. OF REFS 40
8a. CONTRACT OR GRANT NO. AF 19(628)-5656 b. PROJECT NO. 5620 Task No. 562005 c. DOD Element No. 61445014 d. DOD Subelement No. 681301	9a. ORIGINATOR'S REPORT NUMBER(S) ASE-1572 9b. OTHER REPORT NO(S) (Any other numbers that may be assigned this report) AFCRL-67-0196	

10. AVAILABILITY/LIMITATION NOTICES

DISTRIBUTION OF THIS DOCUMENT IS UNLIMITED

11. SUPPLEMENTARY NOTES	12. SPONSORING MILITARY ACTIVITY Hq. AFCRL, OAR (CRW) United States Air Force L. G. Hanscom Field, Bedford, Mass.

13. ABSTRACT

A study ~~has~~ been made of the solution variables, crystal constants, and system parameters which control the growth of large perfect crystals of refractory oxides from fused salt solvents. A set of formulas ~~have~~ been developed for the prediction of growth conditions from these fluxes. Cooling rates, thermal gradients, stirring rates, and container dimensions have been considered as system parameters. Solubilities, diffusion constants, viscosities, interfacial surface energies, solution and crystal densities, and solute radii have been considered as independent variables. The formulas have been applied to the prediction of crystal growing conditions for the production of sapphire and ruby from a lanthanum fluoride-aluminum oxide flux. The study included experimental determinations of the densities and viscosities of the lanthanum fluoride-aluminum oxide flux and experiments upon the solubility of aluminum oxide in this flux.

Results from the program indicate that past and present difficulties with the fused salt technique of crystal growth have been caused primarily by hydrodynamic factors which may be overcome by detailed planning of experimental growth conditions.

DD FORM 1 JAN 64 1473

Unclassified

Security Classification

Unclassified

Security Classification

14 KEY WORDS	LINK A ROLE	LINK A WT	LINK B ROLE	LINK B WT	LINK C ROLE	LINK C WT
Theory	8	3				
Single Crystal Growth	8	3				
Fused Salt	8, 10	3				
Refractory Oxides	2	3				
Growth Conditions	6	3				
Cooling Rates	6	1				
Thermal Gradients	6	1				
Convection	7	2				
Stirring Rates	6	3				
Container Dimensions	6	1				
Solubility	6	2				
Interfacial Surface Energy	6	2				
Sapphire and Ruby	2	2				
Lanthanum Fluoride	1	2				
Flux Density	2, 6	2				
Flux Viscosity	2, 6	2				
Hydrodynamic Factors			8	3		

INSTRUCTIONS

1. ORIGINATING ACTIVITY: Enter the name and address of the contractor, subcontractor, grantee, Department of Defense activity or other organization *(corporate author)* issuing the report.

2a. REPORT SECURITY CLASSIFICATION: Enter the overall security classification of the report. Indicate whether "Restricted Data" is included. Marking is to be in accordance with appropriate security regulations.

2b. GROUP: Automatic downgrading is specified in DoD Directive 5200.10 and Armed Forces Industrial Manual. Enter the group number. Also, when applicable, show that optional markings have been used for Group 3 and Group 4 as authorized.

3. REPORT TITLE: Enter the complete report title in all capital letters. Titles in all cases should be unclassified. If a meaningful title cannot be selected without classification, show title classification in all capitals in parenthesis immediately following the title.

4. DESCRIPTIVE NOTES: If appropriate, enter the type of report, e.g., interim, progress, summary, annual, or final. Give the inclusive dates when a specific reporting period is covered.

5. AUTHOR(S): Enter the name(s) of author(s) as shown on or in the report. Enter last name, first name, middle initial. If military, show rank and branch of service. The name of the principal author is an absolute minimum requirement.

6. REPORT DATE: Enter the date of the report as day, month, year; or month, year. If more than one date appears on the report, use date of publication.

7a. TOTAL NUMBER OF PAGES: The total page count should follow normal pagination procedures, i.e., enter the number of pages containing information.

7b. NUMBER OF REFERENCES: Enter the total number of references cited in the report.

8a. CONTRACT OR GRANT NUMBER: If appropriate, enter the applicable number of the contract or grant under which the report was written.

8b, 8c, & 8d. PROJECT NUMBER: Enter the appropriate military department identification, such as project number, subproject number, system numbers, task number, etc.

9a. ORIGINATOR'S REPORT NUMBER(S): Enter the official report number by which the document will be identified and controlled by the originating activity. This number must be unique to this report.

9b. OTHER REPORT NUMBER(S): If the report has been assigned any other report numbers *(either by the originator or by the sponsor)*, also enter this number(s).

10. AVAILABILITY/LIMITATION NOTICES: Enter any limitations on further dissemination of the report, other than those imposed by security classification, using standard statements such as:

(1) "Qualified requesters may obtain copies of this report from DDC."

(2) "Foreign announcement and dissemination of this report by DDC is not authorized."

(3) "U. S. Government agencies may obtain copies of this report directly from DDC. Other qualified DDC users shall request through _____."

(4) "U. S. military agencies may obtain copies of this report directly from DDC. Other qualified users shall request through _____."

(5) "All distribution of this report is controlled. Qualified DDC users shall request through _____."

If the report has been furnished to the Office of Technical Services, Department of Commerce, for sale to the public, indicate this fact and enter the price, if known.

11. SUPPLEMENTARY NOTES: Use for additional explanatory notes.

12. SPONSORING MILITARY ACTIVITY: Enter the name of the departmental project office or laboratory sponsoring *(paying for)* the research and development. Include address.

13. ABSTRACT: Enter an abstract giving a brief and factual summary of the document indicative of the report, even though it may also appear elsewhere in the body of the technical report. If additional space is required, a continuation sheet shall be attached.

It is highly desirable that the abstract of classified reports be unclassified. Each paragraph of the abstract shall end with an indication of the military security classification of the information in the paragraph, represented as *(TS)*, *(S)*, *(C)*, or *(U)*.

There is no limitation on the length of the abstract. However, the suggested length is from 150 to 225 words.

14. KEY WORDS: Key words are technically meaningful terms or short phrases that characterize a report and may be used as index entries for cataloging the report. Key words must be selected so that no security classification is required. Identifiers, such as equipment model designation, trade name, military project code name, geographic location, may be used as key words but will be followed by an indication of technical context. The assignment of links, rules, and weights is optional.

Unclassified

Security Classification