AD 655861
TT 67-62352

FTD-MT-65-272

FOREIGN TECHNOLOGY DIVISION

WELDING OF NONFERROUS METALS AND THEIR ALLOYS
(CHAPTER IX AND X)

By

Ya. L. Klyachkin

D D C
RECEIVED
JUL 31 1967
B

RECEIVED
AUG 3 1967
CFSTI

Distribution of this document is unlimited. It may be released to the Clearinghouse, Department of Commerce, for sale to the general public.

FTD-MT-65-272

EDITED MACHINE TRANSLATION

WELDING OF NONFERROUS METALS AND THEIR ALLOYS
(CHAPTER IX AND X)

By: Ya. L. Klyachkin

English Pages: 57

SOURCE: Svarka Tsvetnykh Metallov i Ikh Splavov (Welding of Nonferrous Metals and Their Alloys) Moscow, 1964, pp. 284-325.

TM6502183

THIS TRANSLATION IS A RENDITION OF THE ORIGINAL FOREIGN TEXT WITHOUT ANY ANALYTICAL OR EDITORIAL COMMENT. STATEMENTS OR THEORIES ADVOCATED OR IMPLIED ARE THOSE OF THE SOURCE AND DO NOT NECESSARILY REFLECT THE POSITION OR OPINION OF THE FOREIGN TECHNOLOGY DIVISION.	PREPARED BY: TRANSLATION DIVISION FOREIGN TECHNOLOGY DIVISION WP-AFB, OHIO.

Date 24 Apr. 1967

This document is a machine translation of Russian text which has been processed by the AN/GSQ-16(XW-2) Machine Translator, owned and operated by the United States Air Force. The machine output has been post-edited to correct for major ambiguities of meaning, words missing from the machine's dictionary, and words out of the context of meaning. The sentence word order has been partially rearranged for readability. The content of this translation does not indicate editorial accuracy, nor does it indicate USAF approval or disapproval of the material translated.

CIRC ABSTRACT WORK SHEET 0878 061

(01)Acc Nr.	(65)SIS Acc Nr.	(40) Country of Info	(41)Translation Nr.
TM6502183	AM5002548	UR	MT6500272

(42)Author	Priority / Distribution
KLYACHKIN, YA. L.	Priority II Distribution STD

(43)Source

"SVARKA TSVETNYKH METALLOV I IKH SPLAVOV"

(02)Ctry	(03)Ref	(04)Yr	(05)Vol	(06)Iss	(07)B. Pg	(45)E. Pg	(73)Date	(47)Subject Code
UR	0000	64	000	000	0284	0325	NONE	13, 11

Language			
RUSS	N/A	MOSKVA	IZD-VO "MASHINOSTROYENIYE"

(39)Topic Tags welding, refactory alloy, refractory metal, corrosion resistance, copper, brass, bronze, nickel alloy, lead, aluminum alloy

(66)Foreign Title

SEE TITAL ABOVE

(09)English Title

WELDING OF NONFERROUS METALS AND THEIR ALLOYS

(97) Header Clas	(63) Clas	(64)Rel	(60) Release Expansion
0	00	0	

ABSTRACT: This book is written on the basis of experience of the author and data in literature on the welding of nonferrous metals and their alloys. It considers the theory of welding nonferrous metals, the basic engineering processes (including light refractory metals), the welding regimes, the composition of fluxes, coatings, and filler wire. There is a brief description of special equipment for welding nonferrous metals. Data are included on the corrosion resistance and mechanical strength of weldments. The book is intended for engineers and technicians of machine-building plants and laboratories. Orig. art. has: 20 figures and 15 tables. English Translation: 56 pages.

TABLE OF CONTENTS

U. S. Board on Geographic Names Transliteration System..... ii

Chapter IX. Welding of Different Metals..... 1

1. Surfacing Ferrous Metals with Nonferrous..... 1

2. Welding of Copper and Its Alloys with Steel..... 8

3. Welding of Aluminum and Its Alloys to Steel..... 11

4. Welding of Plated Steel..... 15

5. Welding of Copper with Aluminum..... 18

6. Welding of Refractory Metals..... 23

Chapter X. New Methods of Welding..... 38

1. Cold Welding..... 38

2. Press Welding..... 44

3. Diffusion-Vacuum Welding..... 46

4. Spin Welding [Russ: "Friction Welding"]..... 49

5. Ultrasonic Welding..... 50

6. Electron-Beam Welding in Vacuum..... 53

7. Welding by Explosion..... 55

U. S. BOARD ON GEOGRAPHIC NAMES TRANSLITERATION SYSTEM

Block	Italic	Transliteration	Block	Italic	Transliteration
А а	*А а*	A, a	Р р	*Р р*	R, r
Б б	*Б б*	B, b	С с	*С с*	S, s
В в	*В в*	V, v	Т т	*Т т*	T, t
Г г	*Г г*	G, g	У у	*У у*	U, u
Д д	*Д д*	D, d	Ф ф	*Ф ф*	F, f
Е е	*Е е*	Ye, ye; E, e*	Х х	*Х х*	Kh, kh
Ж ж	*Ж ж*	Zh, zh	Ц ц	*Ц ц*	Ts, ts
З з	*З з*	Z, z	Ч ч	*Ч ч*	Ch, ch
И и	*И и*	I, i	Ш ш	*Ш ш*	Sh, sh
Й й	*Й й*	Y, y	Щ щ	*Щ щ*	Shch, shch
К к	*К к*	K, k	Ъ ъ	*Ъ ъ*	"
Л л	*Л л*	L, l	Ы ы	*Ы ы*	Y, y
М м	*М м*	M, m	Ь ь	*Ь ь*	'
Н н	*Н н*	N, n	Э э	*Э э*	E, e
О о	*О о*	O, o	Ю ю	*Ю ю*	Yu, yu
П п	*П п*	P, p	Я я	*Я я*	Ya, ya

* ye initially, after vowels, and after ъ, ь; e elsewhere. When written as ё in Russian, transliterate as yё or ё. The use of diacritical marks is preferred, but such marks may be omitted when expediency dictates.

CHAPTER IX

WELDING OF DIFFERENT METALS

In order to economize on nonferrous metal, industrial practice includes welding it with ferrous metal or surfacing ferrous metal with nonferrous metal. Also, the welding of nonferrous metals to each other by all known methods is practiced. In connection with different physicomechanical properties of different metals, such welding presents certain difficulties and requires special technology.

1. Surfacing Ferrous Metals With Nonferrous

The facing of copper on steel and cast iron is produced by all the methods of fusion welding.

Surfacing by gas burner is carried out with the use of powder fluxes (see Table 16) or ordinary melted borax, and also with the gas flux BM-1. The technology of surfacing differs somewhat from welding in that the flame is directed onto steel or cast iron, not melting them, but only forming a film of molten ferrous metal, into which flows nonferrous metal melted by the flame of the burner. The regimes for surfacing bronzes are the same as those for red copper. Siliceous bronze is melted after preliminary tinning of the ferrous metal by brass.

During the surfacing of steel with copper or bronze there will be formeducated an intermediate layer consisting of copper, iron, silicon, and zinc, which is very fragile and during bending of the component promotes exfoliation of the surfacing from the steel. During operation of the part under abrasion the layer of nonferous metal is held strongly. However, the surfacing has a considerable quantity of very small pores which are of no value when the part works under abrasion. There will appear small impregnations of iron in the layer of copper, which are obtained because of the difference in the specific gravities of copper and iron. Surfacing should be preceded by thorough cleaning of the surface of the steel component and the filler metal. Most often, surfacing is produced after preliminary heating of the article by external means or with accompanying preheating by a second welding burner to a temperature of ~950°C (for powder flux, 900°C).

The regime of surfacing (selection of diameter of filler rod and burner capacity)is established according to the thickness of one layer of surfacing, fulfilled for copper and its alloys after one pass, according to [6]:

Height of fused layer in mm.....	3-4	5-6	6-7
Diameter of filler rod in mm....	4-6	8-10	10-12
Burner capacity in liters/hr....	750	900	1200

In the experience of the VNIIAVTOGYeN [All-Union Scientific Research Institute of Oxyacetylene Welding and Cutting of Metals], are produced on various sealed fittings and are automated to increase process productivity. Thus, Fig. 118 shows the overall view of automatic welders for the gas-flux surfacing of nonferrous sealing rings on damper flaps of ferrous metal.

Fig. 118. Overall view of automatic welders for gas-flux surfacing of nonferrous metals (bronze, copper, brass) on ferrous metals.

The automatic welder has two rotating units, of which one serves for preliminary preheating, and the other for surfacing. The units are equipped with multinozzle burners into the gas mixture of which flux BM-1 is introduced.

Such automatic welders considerably increase the productivity of surfacing and can be constructed for any configuration of component to be surfaced. To increase the productivity of manual surfacing, mobile or rotating tables are used, on which the parts to be surfaced are packed. During manual surfacing of brass on steel or cast iron, the filler is held approximately at an angle of 30-60° to the article, depending upon the height of the surfacing, and the article itself is set at an angle of 8-10° to the horizontal. Surfacing is conducted on the rise.

By applying the above-indicated filler metals and fluxes during surfacing with brass, a smokeless process can be obtained.

GRAPHIC NOT
REPRODUCIBLE

Fig. 119. Microstructure of the transition zone in surfacing brass on steel by a gas burner. ×100.

Fig. 120. Microstructure of transition zone during surfacing of copper on steel by a gas burner. ×100.

Brass of brand LKN-56-03-6, fused on steel, ensures a smokeless process and excellent bonding with the steel. It is recommended for surfacing of critical parts.

Figures 119-120 show transition zones in the surfacing of steel with fillers of copper and brass; from the figures one can see the excellent fusion of the nonferrous metal with the steel in the region of the melted layer of steel.

Surfacing with a d-c carbon electrode with direct polarity is more rarely used and is produced according to the conditions of arc welding.

The method of surfacing with copper or bronze chips practiced in certain plants, is of interest. Surfacing is produced with a carbon or graphite d-c electrode. The chips are sorted by dimensions by means of sifting, degreased by a calciferous solution, subjected to electromagnetic separation for separation from iron inclusions, and in such form are mixed with melted borax (1/10 borax by volume) and poured onto steel prepared for surfacing.

By exciting the arc and importing forward motion to an electrode with transverse oscillations, simultaneous melting of the shavings and the base metal is produced. The bath is maintained in the liquid state for the entire time. To eliminate the possibility of runoff of liquid metal it is necessary that the edge of the part being surfaced be molded by clay.

To decrease porosity surfacing a second heating by a carbon arc with melting of the surface of the facing is carried out. Chips are poured in a 10-12 mm layer; the height of the surfacing obtained is 6-8 mm. In practice several layers are used to attain surfacing of 15-20 mm. Before [addition of] each subsequent layer, thorough cleaning of the preceding layer of slag and beading should be carried out.

When adding the chips one should keep in mind that the height of the surfacing obtained is half the height of the layer of chips.

Surfacing with powder or chips with a gas burner is made more difficult by the blowing of the chips by the stream of flame.

Forging directly after welding strengthens the metal and eliminates the porosity of the surfacing.

Surfacing with a metallic electrode is done manually and by mechanical means, which ensures good results and increases productivity as against surfacing with a carbon electrode and a gas burner.

Manual surfacing is produced on d-c current with reverse polarity. Arc voltage is 25-35 v; the current for bronze electrodes 6-7 mm in diameter is 220-240 amp. At smaller currents a large number of pores appear in the surfacing, while at longer currents cracks arise. After surfacing the weld is planed to a depth to 3 mm. Multilayer is permissible. The thickness of the layer of surfacing after one pass is 6-8 mm.

Manual arc surfacing of copper and its alloys on steel or cast iron should be produced in multilayer form; this increases the density of the metal (with the exception of brass). With a metallic electrode it is useful to produce surfacing of beads first from the edges of the part, and then to fill the middle between them.

Manual surfacing of large surfaces can also be carried out under a layer of flux. This improves the quality of the fused metal. Before surfacing it is necessary to produce thorough cleaning of the surface to be fused. This will decrease significantly the porosity of the surfacing.

Surfacing of copper on steel can be produced automatically under flux with the application of the addition in the form of wires of various diameters of brands M1, M2, and M3 or copper strips of the same composition and with the dimensions 0.8-1.0 x 60-65 mm.

Fluxes are applied in the same way as during automatic welding of copper. The best results are ensured with surfacing under the fluxes AN-20 and AN-60. The latter flux is pumicelike and is applied during use of a strip electrode, since it ensures minimum porosity of the surfacing during surfacing with copper strip the melting of steel is minimal and the surfacing contains a minimum quantity of iron.

Depending upon the required dimension of the copper layer, surfacing is conducted on the rise or descent. When the dimensions are considerable surfacing on the rise is preferred. However, in this case a considerable quantity of iron (4-6%) in the copper is found and there is deeper melting of the steel than during surfacing on the descent.

The depth of melting and, consequently, the height of the surfacing are regulated by the angle of inclination of the melted plane. In the experience of plants and according to the data of the author, on the average the angle of inclination should constitute ~10-12°; an angle of 30° is limiting.

The regime of surfacing with copper under the flux AN-20 is as follows: U_p = 38-40 v, current density for the wire i = 65-70 amp/mm, and with an 0.8 × 65 mm band I_p = 500-550 amp. For d-c current with reverse polarity, U_p = 45 v, v_{CB} = 25 m/hr.

Destruction of a fused specimen occurs along the metal of the weld and the base metal, which indicates good fusion of these metals.

The Ye. O. Paton Institute has developed regimes for surfacing with aluminum bronze of brand Br.AMZhts 10-3-1.5 on steel with wires 6 and 8 mm in diameter under the AN-20 flux. For this purpose 850-900 amp d-c with reverse polarity is used. The rate of feed of electrode wire 6 mm in diameter is 75-90 m/hr and the rate of surfacing is 15-25 m/hr with an arc voltage of 32-37 v. The surfacings are single-layer, with thickness of 5-8 mm, and multilayer (to 3 layers) with a total surfacing thickness of up to 15-20 mm.

To decrease cracks in the surfacing preliminary heating of the article to 200-400°C is recommended.

At the Alchev metallurgical plant such surfacings have been applied for the restoration of components of spindle connections of rolling mills.

Another example of the surfacing of copper on steel by a strip electrode is the covering of components of thrust supports and bearings of large turbogenerators before lining with Babbit metal.

During the use of a strip electrode the depth of fusion of the steel decreases considerably and, consequently, there are fewer inclusions of iron in the surfacing; a uniform layer of the latter is also ensured. The chemical composition of the strip is selected in dependence upon the intended use of the surfacing. According to the Ye. O. Paton Institute the width of the fused run is approximately equal to the width of the strip. The warrent density required to ensure a stable process constitutes 10 amp/mm^2 for copper strip; the layer of flux should be 30-40 mm in height. The coefficient of surfacing for copper is equal to 35 g/amp.hr.

2. Welding of Copper and Its Alloys With Steel

Besides the welding of plated steel sheets, in instrument building we encounter the necessity of the direct welding of nonferrous metal to steel; this is most frequently carried out with butt joints. Depending upon the character of the structure in this case the welds can be internal or external.

Gas welding is useful for welding brass to steel, but for welding of red copper with steel, electric arc metallic-electrode welding is preferable. Good results are obtained in welding with a carbon electrode under a layer of flux and gas welding with flux BM-1.

When the thicknesses of the nonferrous metal and the steel are equal, the preparation of edges is carried out just as during welding of ferrous metals. Beveling of edges is done for thicknesses of metal of 3 mm and more.

When the bevel of the edges is insufficient or when there is contamination of the faces of the welded components it is impossible to attain good penetration. Therefore, in working with large thicknesses of metal where X-shaped edge preparation is applied, one should not make truncations.

In practice gas welding of brass with steel with help of a copper filler is also utilized.

The welding of copper with steel is a complicated problem, but it is fully feasible for hard-facing operations and the welding, for instance, of components of chemical equipment or of copper wire to a steel block. The strength of such connections satisfies practical requirements.

The strength of copper is increased with the introduction of iron up to a quantity of 2%; with further additions it drops.

During welding with a carbon electrode, as was shown above, direct current of direct polarity is used. The arc voltage is 40-55 v, and the length of the arc, on the average, is 14-20 mm. Current is selected in accordance with the diameter and the quality of the electrode (carbon and graphite) and constitutes 300 to 550 amp. The flux used are the same as for copper, and are introduced as filling in the groove.

"Left" method of welding. During the welding of copper busbars to steel, the best results are obtained with welding "in a boat," as is shown on Fig. 121.

First heat the copper with a carbon electrode, and then weld with a determined location of the electrode and filler rod (see Fig. 121). The speed of welding v_{CB} = 0.25 m/hr (0.04 m/sec). Welding of copper and cast iron is produced by the same methods.

N. A. Ol'skanskiy [78] experimentally checked and, obtaining good results, introduced into production the welding of low-alloy bronze of small thickness (1.35 mm) to steel with a thickness of 2.5 mm by laping, with a nonconsumable tungsten electrode in a medium of argon of automatic welders with feeding of filler rod in 1.8 mm from the side.

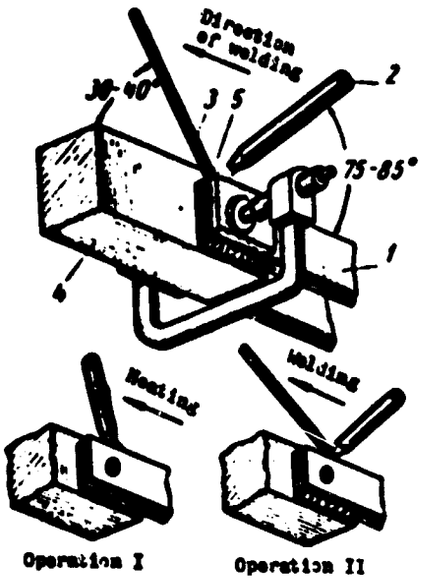

Fig. 121. Welding of copper busbars to steel rod: 1) copper bus or pack of bands, 2) carbon electrode, 3) filler rod, 4) steel rod, 5) graphite forming plate.

In this case the correct guidance of the arc on the overlap on the copper side at a determined distance from the edge of the copper sheet is very important.

Welding conditions: I_p = 190 amp, U_p = 11.5 v, v_{CB} = 28.5 m/hr, $v_{ПОД}$ = 70 m/hr.

Copper and brass are sufficiently well welded to steel by butt welding with fusion. In thses cases the steel blank is melted to a greater degree and the nonferrous metal, insignificantly. Considering this circumstance and the difference in resistivities of these metals, we take adjusting length l (overhang) as follows: for steel l = 3.5d; for brass l = 1.5d; and for copper l = 1.0d, where d is the diameter of the welded rods.

For butt welding of such rods by the resistance method [100] the following are recommended: l = 2.5d; l = 1.0d; and l = 1.5d, respectively.

Specific pressure of upsetting is taken as 1.0-1.5 kgf/mm^2.

According to work [28] and others, in practice various kinds of pins 8-12 in diameter of nonferrous metals are welded to steel and steel pins are welded to nonferrous metals. Welding is produced on reverse-polarity d-c under a shallow flux of the brand OSTs-45, without preheating.

At a current of I_p = 400 amp copper pins up to 12 mm in diameter and brass pins of the brand L62 with diameters up to 10 mm are welded to steel and cast iron well, which pins of LS 59-1 are unfit for welding.

Steel pins weld poorly to copper and brass. If one places on the end of a pin 8 mm in diameter a copper ring with a height of 4 mm, then welding proceeds satisfactorily; the same sort of pins, 12 mm in diameter, are welded well to bronze of brand Br. OF 10-1.

For steel-to-copper, arc welding with K-100 electrodes ensures the best results (Table 18).

3. Welding of Aluminum and Its Alloys to Steel

In connection with the sharp difference in the phsyicochemical properties of aluminum and its alloys and those of steel, the welding of such pairs is extraordinarily difficult. At present welding of these metals can be carried by: fusion only in a medium of argon, butt seam welding by fusion, and diffusion-vacuum [welding].

In the process of fusion welding alloys of aluminum with iron, solid solutions of aluminum and $FeAl_3$, and very hard and brittle intercrystalline connections are formed. In this connection resistance butt welding gives the best results. With resistance fusion welding the refractory impurities formed are not, for practical purposes, displaced during upsetting of the joint and therefore current conditions which do not heat the welded metals will be selected.

On the whole, during fusion welding there is a tendency to the formation of only a very thin intermediate film, but nonetheless the joint obtained is quite fragile.

To make welding easier there are applied technological methods which encure unfused steel and melting of the aluminum and filler. In particular, before welding the edges of the steel are covered with different metals by hot or galvanic means; argon arc welding with a tungsten electrode is conducted over these coverings with the use of a filler rod. According to our data, good results are obtained with electrometallizing of edges.

The simplest method for covering the edges with an intermediate metal is that of hot calorizing by dipping the steel edge in melted aluminum, holding in it for up to 40 minutes and cooling it slowly. However, experiments of the plant imeni Zhdanov, the Leningrad Ship Institute [19], The Ye. O. Paton Institute [94], and others showed the usefulness of other coverings or intermediate bimetalic inserts [90].

The selection of the preliminary covering depends on the requirements for strength of construction, the technical capabilities of the enterprise, and economic considerations. The most expensive method is galvanic plating. The work of D. M. Rabkin et al. [94] shows the conditions for such covering.

Table 89 shows the results of different methods of argon arc welding of aluminum alloys to steel according to data from practical experience and those of various authors.

All methods which utilize the application of coatings cause considerable industrial difficulties. Therefore such a preparation of edges can be applied only for small units of construction. Of greatest interest are the methods by F. I. Randuy et al. [90], in

Table 89. Strength of Welded Joint of Aluminum Alloys with Steel in Argon Arc Welding (DS) [MIG-Welding ?]

Welded alloy, brand	Metal of the the covering of steel	Method of applying the covering	Strength of Joint σ_b in kgf/mm^2 (MN/mm^2)	Metal-filler	Source
ADI	Aluminum	Hot submersion	6.2-7.8* (60.8-76.5)	AK	[19]
	Tin	Galvanic	7.4-7.6 (72.6-74.5)		
		Hot submersion	7.4-7.8 (72.6-76.5)		
AMts	Aluminum	Galvanic	9.1-9.5 (89.2-93.2)	AK	[19]
	Zinc	-	9.8-10.1 (96.1-99.0)		
		Aluminum	6.2-9.8 (60.8-96.1)		
Amg	Tin	Aluminum	10.8-15.0 (105.9-147.0)		
	Aluminum plated layer AMg3	Insert of plated metal	2.6-3.5* 25.5-34.3)	AMg5V	[90]
		The same	6.7-9.6 (65.7-94.1)		
	AMg	The same	8.2-9.8 (80.4-96.1)		
	Silver	Galvanic	5.7-18.4 (55.9-180.4)	ADI	[94]
	Zinc	Galvanic	(11.1-15.0) (108.8-147.1)		
		Hot submersion	10.2-15.6 (100.0-152.9)		
	Two layers: 1) copper and 2) zinc	Galvanic	14.6-20.7 (143.2-203.0)		
	Brass		9.0-18.7 (88.2-183.4)		[19]
	Aluminum	Hot submersion	7.0-8.0 (68.6-78.4)		
	None	None	10.7-12.5 (104.9-122.6)		
	Zinc	Galvanic[1]	10.2-10.6 (100-104)		
AMg6	Zinc	Galvanic[1]	5.0-8.0 (49.0-78.4)	AD	
			7.0-8.0 (68.6-78.4)		

*Cruciform sample. All others, butt joints.

[1]Welding after surfacing of an aluminum bead on a zinc layer.

which intermediate inserts of bimetal are used in different constructions of units (as shown, for example, on Fig. 122 on the scheme steel - bimetal - aluminum), and the method which we have proposed, i.e., metallizing by atomization of aluminum or zinc (and also other metals) on weldment edges, both with and without subsequent melting.

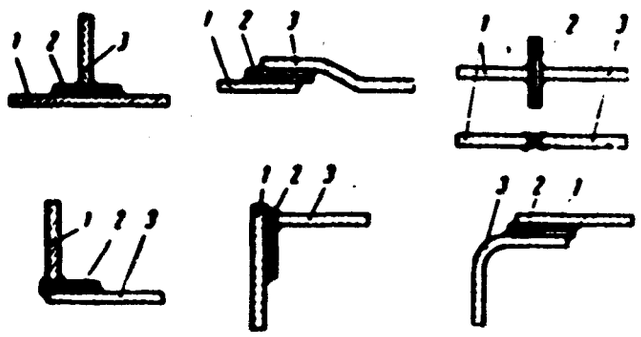

Fig. 122. Scheme for welding steel-aluminum units through intermediate bimetallic inserts [90]:
1 — steel, 2 — bimetal, 3 — aluminum [or] alloy.

Methods of preliminary tinning of edges before gas welding are also known. Excellent results are obtained during diffusion-vacuum welding according to the method of Prof. N. F. Kazakov.

A method of applying a galvanic layer 30-60 μ in thickness in workshop conditions is described in work [94], and a method of manufacturing a bimetal for inserts in work [90].

The technology of argon arc welding [94] is clear from Fig. 123. In this case the interlayer is a combined one made of zinc through a layer of copper. The burner is so set that the arc between the tungsten electrode and the article will be excited at a distance of 1-2 mm from the edge of the joint, on which the filler rod is laid.

S. A. Bel'chuk [19] recommends that the preliminary covering be aluminum, i.e., calorizing using heating by h-f current. In this case at the moment of heating with fluxing the aluminum is melted, covering

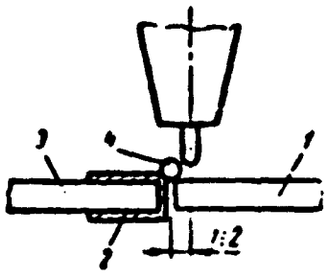

Fig. 123. Scheme of argon arc welding of aluminum alloys to steel [94]:

1-aluminum alloy, 2-combined coating, 3-steel, 4-filler rod.

the steel with a 0.5-1.5 mm. It is also possible to apply the aluminum directly on the steel in the form of beads, on which a connecting weld with aluminum alloy is subsequently laid.

The conditions of welding of an aluminum-steel joint for tungsten a electrode 2-3 mm in diameter constitutes, tentatively: current 80-130 amp, speed of welding 6-12 m/hr, diameter of filler rod 2-3 mm. During welding on previously placed beads of aluminum the current can be increased to 160-180 amp at an electrode diameter of 3 mm.

4. Welding of Plated Steel

For the purpose of economizing on nonferrous metals, in chemical machine building two-layer steels, i.e., steels plated with copper, brass or bronze, are applied. The welding of such steels is carried out with a certain technology which should ensure on the part of the nonferrous metal good corrosion-resistant welds without considerable quantities of iron impurities.

When welding copper-plated steel, it is necessary independently of the character of the preparation of edges and the thickness of the metal to weld the copper with a copper filler wire in no less than 2 layers.

The best form of such a joint is realized by arc welding with a metallic electrode. The weld reinforcement must then be removed by mechanical means. This operation should be done with a pneumatic chisel, since in this case partial forging of the weld at the moment

of cutting is possible.

It is also necessary to deal with the welding of steel plated with aluminum. This process is best carried out by argon arc welding at small thicknesses of a tungsten electrode, but considerable thicknesses of a consumable electrode.

The difficulties encountered during the welding of a bimetal are the same as those met during the welding of the nonferrous metal.

In welding a bimetal, A. N. Krutikov et al. recommend the application of asymmetric X-shaped preparation of the edges at an angle of 30-35°.

First weld the base metal; after this, clean or cut out the root of the weld, clean a copper sheet, and weld it, usually by manual or automatic arc welding. As the electrode metal use the same composition as the plating. During manual welding no transfer of plating metal into the base metal was noticed, but during automatic welding (under flux) there were cases of inclusions of copper to a depth of 2-3 grains and overheating of the steel with formation of Widanstatten structure. According to [53], there may be cracks in the steel; their cause is still not quite clear. Figure 124 shows the microstructure of plated steel and the transition zone (weld metal-base metal) of a weld made by manual arc welding.

From Fig. 124 it is clear that in copper and brass there is observed a growth of the grains, while for bronze this is not observed; in copper the transition zone is sharply expressed, and in brass and bronze it is expressed to a considerably smaller degree.

The experience of NIIKhimmash (All-Union Design Scientific Research Institute of Chemical Machinery) shows that during the manufacture of equipment from plated steels thorough trimming of edges during assembly is necessary. Experiments of the plant during tests

in an acetic medium showed, with heating to 80°C, excellent results in terms of corrosional resistance. Mechanical strength of the welded specimen as a whole is not inferior to the strength of whole metal.

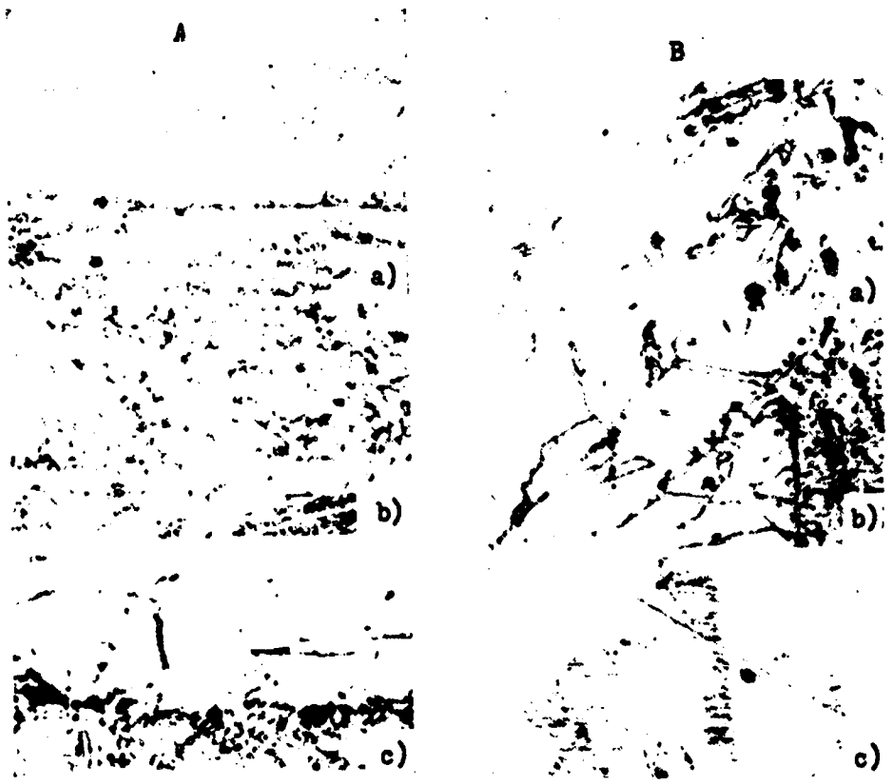

Fig. 124. Microstructure of plated metal: A) base and plating layer. ×200; B) weld metal and plating metal (transition zone, increase various):

a) steel-bronze. ×300, b) steel-copper. ×200, c) steel-brass ×100.

In practice it is frequently necessary to prepare apparatuses from copper-plated steel obtained not by rolling, but by means of placing copper sheets on steel. In this case it is necessary to join the steel and the copper sheet over the entire plane by arc spot welding. The spot welds are spaced no closer than five diameters of their holes. The diameter of the hold is selected depending upon the thickness of the sheet on whose side welding is produced. Usually the diameter of the hole for arc spot welding is made equal to 3 to 5

thicknesses of the sheet.

To improve the work of an apparatus with a copper overlay, welding of arc spot welds should be conducted prior to assembly of the apparatus, the idea being to carry out the welding from the side of the steel sheet, not burning through the copper overlay.

In this case the first filler weld is made with a copper filler rod (electrode), and subsequent fillet, depending upon the thickness of the steel, are applied by electrodes with appropriate dressing. If the thickness of the copper sheets is less than 3 mm, a lining of steel or, best of all, of copper of considerable thickness should be placed under the copper sheet.

During surfacing of arc spot welds from the side of the copper facing in the assembled construction, the welds are made with copper electrodes and in 2 layers, so that the upper layer can subsequently be trimmed or filed off.

To decrease the deformation of the sheets during welding of the holes under arc spot welding, this operation should be produced by welding the spot welds haphazordly. The current and the compositions of the fluxes and dressings are the same as during welding of copper, but for steel are appropriate to its brand.

5. Welding of Copper with Aluminum

Fusion welding of aluminum to copper is connected with certain difficulties, since in the liquid bath there will be formed alloys which are difficult to control and not always of determined composition. The mechanical properties of the metal of the weld vary with the content of copper in the aluminum, as is clearly evident on the diagram in Fig. 125.

With an increase in the content of copper in the alloy from 12% and above tensile strength is not increased, and viscosity and corrosion resistance drop sharply. The metal of a weld of aluminum-copper alloy with a copper content of more than 12% is very brittle and is inclined to the formation of cracks.

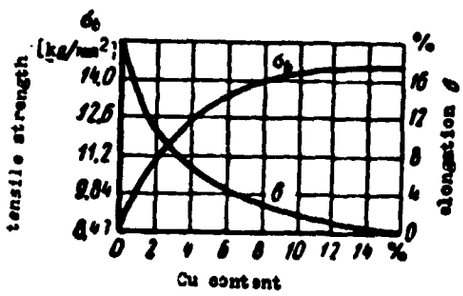

Fig. 125. Properties of alumunim-copper alloys, depending upon the copper content.

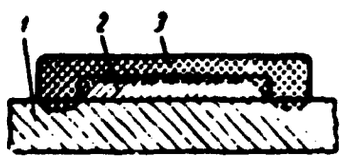

Fig. 126. "Locked" joint of a copper bus with an aluminum bus:

1) aluminum bus, 2) copper bus, 3) fused metal.

The solubility of copper in aluminum is limited to 5.7% at a temperature of 548°C. The chemical compound $CuAl_2$ contains 54.1% copper and will form a eutectic with a solid solution of copper in aluminum.

According to V. A. Kuznetsov and A. A. Oberstein [54], a welded butt joint of aluminum with copper, made with a carbon electrode, does not give a positive result, and therefore in constructions of electrical contacts in the electrometallurgy of aluminum the so-called "locked" joint is used.

The essence of the "locked" joint consists in the fact that on the aluminum bus 1 (more frequently with branching) (Fig. 126) there is placed copper bus 2, which is collared along the perimeter of the covering plate by a weld even with the thickness of the copper bus; then surfacing 3 is produced, connecting the welds along the edges, and thus there is obtained a unique lock of aluminum alloy. Welding

is conducted with molded graphite planks [strips].

The conditions of welding of aluminum to copper differ little from those for welding of aluminum. The current is d-c with direct polarity. The filler metal is aluminum in the form of cast rods 12-20 mm in diameter for thicknesses of aluminum of 29-30 mm and copper of 10 mm; the welding current is 500-550 amp, voltage 50-60 v, arc length is 20-25 mm. The electrodes are graphite, 15-20 mm in diameter. Cleaning is by the usual process. For aluminum the fluxes are the same.

The welding of copper pins to bronze and brass proceeds well under any of the fluxes [used] for steel, while brass pins, in connection with the formation of ZnO, weld poorly to copper and bronze. Copper and brass pins weld poorly to aluminum.

The resistance welding of aluminum-copper joints is successfully applied in the electrical industry during the joining of aluminum buses to copper tips (for contacts), aluminum wires to tips, and so forth.

In the cable industry percussion welding of aluminum and copper wire is done according to the conditions shown in Table 90.

Table 90. Conditions for Percussion Butt Welding of Copper and Aluminum Wires

Diameter of welded wire in mm	Capacity and of capacitors in microfarads	Voltage of capacitors in v	Initial distance between welded parts in mm	Force of upsetting in kgf (N)
2.5	256	1100	14	150(1471)
2.8	256	1400	10	150(1471)
2.8	260	1400	15	150(1471)
2.8	380	1350	15	160(1569)
2.8	550	1200	15	175(1716)
3.5	550	1500	12	160(1569)
5.0	1000	1500	14	175(1716)

In the refigeration industry butt welding of various tubes is used. Since the melting of aluminum occurs to the larger degree, the length established for it should be greater.

To decrease the amount of burr from the internal side of the tube, it is recommended [102] at the time of welding to pass through air at a pressure up to 0.25 atm. We consider this recommendation to be a poor one, since the contact of atmospheric oxygen with heated aluminum and copper will lead to their intense oxidation. The tube should be ventilated with nitrogen.

At the Moscow plant imeni. Likachev welding of aluminum tubes 8 × 2 mm in diameter to [copper?] tubes of the same diameter is carried out by the fusion method on the MSTs-25 machine. This is intended for the future welding of such units to the aluminum evaporator of a refrigerator by argon arc welding.

Before butt welding, the tubes are pressed back to a length of 10 mm, with thickening of the walls, on a special attachment. This operation makes it possible subsequently, during treatment of the joint, to obtain the former diameter of the hole, since it will be distorted during upsetting at the time of welding.

The treatment of the joint consists in machining of the thickened surface on a lathe and drilling out the hole of the tube.

For welding copper tubes to aluminum tubes with a diameter of 10-30 mm and wall thickness of 1.5-4 mm, VNIIESO [120] [The All-Union Scientific Research Institute of Electric-Arc Welding Equipment] recommends the following conditions:

Specific pressure of upsetting in kgf/mm^2 (MN/m^2).....	20-22 (196-216)
Density of current of upsetting, a/mm^2.....	900

Density of current during fusion in amp/mm^2.....	240
Average speed of fusion in mm/sec.....	12-15
Speed of upsetting in mm/sec..	100-120
Magnitude of fusion of aluminum tube in mm.....	8-10
Magnitude of fusion of copper tube in mm.....	2-8
Total magnitude of upsetting in mm.....	3,5-5
Duration of welding in sec....	1,1-1,2

In a break in the joint there is always a noticeable inclusion of aluminum in the copper. Inclusions of copper in the aluminum do not occur.

Destruction of a joint with sufficient strength occurs along the aluminum tube. A noticeable microline of metal oxides, according to the experiments in [102], does not have an essential effect on the strength of the welded joint. With insufficient upsetting it may be wider and then destruction of the joint proceeds along the transition zone.

For welding of tubes of Br. AMts and Br. AMts 9-2, 16 and 26 mm in diameter and with respective wall thicknesses of 2.5-3.0 mm, in spite of considerable difference in melting points and the low plasticity of Br. AMts 9-2 at high temperatures, VNIIESO obtained satisfactory results with welding by intense fusion with subsequent upsetting with considerable deformation and high speeds on the MSKN-150 machine.

Upsetting under current was conducted for 0.02-0.03 sec. The rate of upsetting was 180-200 mm/sec. The adjusting length was 0.7 d for a diameter of 16 mm and 0.45 d for a diameter of 26 mm for both

alloys. The total time of welding was 1.52 and 1.83 sec, respectively. Destruction proceeds over the base metal AMts. A current density 6-10 times greater than that for steel is required. According to ZIL [Moscow automobile plant imeni. Likhachev], there occurs adhesion of AMts on the bronze, lowering the corrosion resistance of the connection.

6. Welding of Refractory Metals

Refractory metals in the heated state, starting from temperatures considerably below their melting points, actively absorb various gasses. In the oxidized state these metals sharply change their color.

Melting points: tantalum (Ta), 2996°C; molybdenum (Mo), 2690°C; niobium (Nb), 2415°C; zirconium (Zr), 1845°C; titanium (Ti), 1825°C.

The most widespread is the welding of titanium and molybdenum, although in recent years, judging by the foreign literature, the welding of other refractory metals and their alloys has been widely introduced. Good results in the welding of various refractory metals in different linkages is ensured by diffusion-vacuum welding [63], [64].

Titanium alloys are inclined to hardening, depending upon the alloying element. Elements stabilizing the β-phase cause brittleness and general impairment of the plasticity of the alloy to a greater degree than elements which stabilize the α-phase. Such elements as Cr, Fe, Mn, W, Mo, and V lower plasticity. Thus, intense absorption of hydrogen, begins at a temperature of 250°C; of oxygen at 400°C, and of nitrogen at 600°C.

The welding of titanium and its alloys is similar to the welding of aluminum, but in connection with the great absorption of gases and the refractory nature, it requires different conditions.

Independently of the refractoriness of metal, preparation before welding consists in preliminary etching of the edges.

Molybdenum possesses an extraordinarily high degree of oxidizability and shows considerable grain growth during heating, which leads to a sharp lowering of plasticity. At room temperature molybdenum is sufficiently plastic.

Even the lowest content of oxygen (0.0005-0.001%) will cause brittleness of the weld metal.

A welded joint possesses great brittleness. The plasticity of molybdenum is somewhat increased by alloying it with aluminum, titanium, and zirconium; however, for the practical purposes of welded joints this is inadequate.

Recently thanks to the work of the Moscow Aviation Technology Institute [MATI] and IMYeT [A. A. Baykov Institute of Metallurgy], it has become joint by the introduction into the weld metal of rhenium (Re), using a filler rod consisting of an alloy of 50% Mo and 50% Re with argon arc welding with a tungsten electrode in special controlled chambers. The conditions of welding are so selected that full penetration of the entire thickness of the metal is ensured. At present welding is produced in the butt joint of molybdenum with a thickness of up to 1 mm. The introduction of rhenium into the weld metal results in an increase in the plasticity of the welded joint of 5 to 7 times.

For resistance welding alloys of Mo with additions of Zr and Ti of up to 0.25% are widely used. Other metals also are being introduced at a rapid pace in a whole series of branches of industry, and the question of methods of welding them is paramount for contemporary machine building.

At present these "new" metals appear chiefly as sheet blanks 2-3 mm thick, and they are used most frequently in thicknesses up to 1 mm. Welding of these metals is produced in an argon medium with

obligatory protection of the reverse side of the welded joint, welding in chambers with controlled atmospheres, resistance welding, and the new methods of welding described below.

However, it is not recommended that metals with a thickness less then 0.3 mm be welded by the argon arc method with a tungsten electrode. In connection with the great thermal conductivity of refractory metals, the transition zones in the welds are of considerable dimensions.

Conditions of welding for the entire group of refractory metals can be tentatively selected, according to the foreign literature, in Table 91.

For welding of molybdenum and also tantalum, D. S. Balkovets et al. recommend the following conditions:

a) for electron-beam butt welding of plates with a thickness of 0.5 mm, a speed of welding 9 m/hr, and for thicknesses of 1 mm a welding speed of 6.3 m/hr with accelerating voltage of 16 kv, beam current of 90 ma, and width of weld of 2.2 mm. These conditions ensure the greatest plasticity and fine structure of the weld.

b) in welding with a tungsten electrode in a controlled atmosphere of argon the 1st composition, for a metal thickness of 0.5 mm, speed of welding 225 and 370 m/hr with variable [alternating] welding current of 280 and 310 amp, respectively.

The sheet tantalum produced at present is obtained from vacuum melt blanks.

Tantalum is used in the manufacture of thin-walled bodies of tubes of heat exchangers, heaters, condensers, and various shells of chemical equipment. Considering that when heated tantalum reacts with the different gases of the atmosphere, when welding it, it is necessary to take measures to protect the heated and molten metal with inert

gases. Otherwise the metal becomes very brittle.

Owing to the high melting point of tantalum, it is necessary to apply a powerful heat source to weld. In order to carry out high-quality welding thorough stripping and trimming of the edges is necessary, especially during the welding of small thicknesses of tantalum. Electron-beam welding and welding in a controlled atmosphere of argon with a consumable electrode are used. Before admission of the gases a vacuum of 10^{-3} mm Hg is created in the chambers.

In connection with the high content of oxygen, it is especially difficult to weld tantalum prepared by the sintering method. For the manufacture of welded thermal equipment, experiments have been conducted on arc welding in a medium of carbon tetrachloride. Resistance welding is also used.

As an example of the application of welding of zirconium we can cite the manufacture by the firm General Electric (United States) of precision pipes from the alloy Zircalloy-2, containing 2% tin, with a wall thickness of 3.9 mm, diameter of 98 mm, and length of 480 mm. The accuracy of manufacture for the diameter is ±0.125 mm.

Welding is conducted in a special attachment in the form of a mounting with a copper lining, on which the tube blank is placed with a clamp by special cover plates, ensuring a joint without gaps. The preparation of the edges consists in mechanical cleaning with steam treatment and washing with acetone.

The copper lining has a groove 1 mm deep with a width of 0.3 mm for feeding protective gas under the joint.

Table 91. Tenative Conditions for Welding Refractory Metals Argon Arc

Thickness of metal in mm	Diameter of tungsten electrode in mm	Expenditure of argon in liters/hr		d-c welding current of forward polarity in amps	Speed of welding in cm/min
		in the burner	for protection of the reverse side of the joint		
0,3	1,6	340	140	45	50
0,5	1,6	400	140	80	62
0,75	1,6	400	140	100	62
1,0	2,4	450	140	125	50
1,25	2,4	450	140	150	50
1,5	3,2	450	140	160	50
2,0	3,2	450	140	180	50

Spot Welding

Thickness of metal in mm	Pressure during welding in kgf/mm (MN/m^2)	Diameter of spot in mm
0,5	8,4 (82)	3,8
1,0	52,5 (515)	5,0
1,5	42 (412)	7,5
2,5	35 (343)	10,0

Roll Welding

Thickness of metal in mm	Force on electrodes in kgf (N)	Width of roller ferrule in mm	Speed of welding in cm/min	Duration of welding in periods of current with frequency of 50 cps		Idling voltage	Voltage with closed circuit	Weld current in amps
				Current connected	Current disconnected			
0,5	23(225)	3	90	[illegible]	2	1,0	1,25	[illegible]
0,25	23(225)	3	90	3	2	1,3	1,[illegible]5	33[illegible]
0,125	11,5(113)	3	90	3	[illegible]	[illegible],5	,7	11[illegible]

Welding is conducted in a special attachment in the form of a mounting with a copper lining, in which the tube blank is placed with a clamp by special cover plates, ensuring a joint with no gaps. The

Preparation of the edges consists in mechanical cleaning with steam treatment and washing with acetone.

The copper lining has a groove 1 mm deep with a width of 6.3 mm for feeding protective gas under the joint.

The firm experiments showed that as the protective gas one should apply not pure argon, but a mixture of 27% argon and 73% helium. Otherwise pores appear in the weld metal. All sections of zirconium, which are heated above 370°C must be protected by gases from oxidation.

Conditions for welding with a tungsten electrode 3.2 mm in diameter d-c with forward polarity, 270 amp, voltage 18 v, in speed of welding 0.43 m/min with the overlay to the burner equal to 27 mm.

The total consumption of gas for the protection of the arc and the reverse side of the weld constitutes 20.425 m^3/hr, for Ar and 1.13 m^3/hr for He.

The pressure exerted on the joint by the cover plates should be no less than 2.5 kgf/cm^2 (0.24 MN/m^2).

After termination of welding the supply of the gas mixture to the burner, attachment, and lining continues for 8-10 sec.

As a result of welding conducted by the indicated conditions and work hardening by a roller there is obtained a strength of the welded joint equal to the strength of the base metal from the Zir alloy-2. The strength indices are as follows:

Properties	Metal	
	base	welded joint
σb – tensile strenght in kgf/mm^2(MN/m^2).	51,6 (506)	52,9 (519)
σm – yield point in kgf/mm^2(MN/m^2)	35,6 (349)	37,9 (372)
Elongation on 50 mm in %.....	30,2	22,0

Along with their high refractoriness, tantalum and niobium are extraordinarily active to the gases of the atmosphere at high

temperatures. Gas saturation of these metals leads to an increase in their tensile strength and hardness and a lowering of their plasticity. Thus, with an oxygen content in niobium of 0.02% its hardness H_v = 100 units and at 0.75% H_v = 350 units. According to N. V. Grevtsev [33] and others, good results can be attained by applying argon-arc welding, but according to [33] the best results are obtained by welding in chambers with controlled atmospheres and by electron-beam welding.

In the A. A. Baykov Institute experiments were conducted on the welding of tantalum and niobium in argon containing 0.005% O_2 and 0.01% N_2 with gas supplied to the lining, checker, and burner..

During normal jet protection by argon [33], welding of tantalum should be conducted with a tantalum electrode, and welding of niobium with a tungsten electrode. However, in this case the zone of thermal influence is saturated by oxygen and nitrogen of the air, which leads to a sharp growth in hardness. The factor of equal distribution of impurities inside every grain (thanks to the high speeds of cooling of the liquid bath) established by The A. A. Baykov Institute leads to preservation of sufficient plasticity of the welded joint.

Fig. 127 contains photomicrographs of welds of niobium and tantalum with exposed oriented figures of etching.

Conditions of welding Ta and Nb are presented in Table 92.

Titanium and its alloys are welded by fusion only by arc welding. The most widely used is welding in a medium of argon or helium under the nonoxidizing flux AN-11. For articles of large thicknesses electroslag welding under the flux AN-T2 is used. Besides the above-mentioned methods, good titanium welds are obtained by resistance welding with or without gas shielding.

GRA
REPR

Fig. 127. Microstructure of weld metal [33]: a) niobium, ×1000, b) tantalum ×800.

With fusion welding it is necessary to apply measures for protecting the reverse side of the weld with argon; in connection with this, butt joints are recommended. Welding is conducted on the backings shown in Fig. 14d.

Small thicknesses of titanium and its alloys are welded with the hand torch described in Chapter I and by automatic welding with a tungsten electrode. The orifices of the burner, according to M. V. Poplavko et al. [85] should be no less than 12-15 mm. During welding with a nonconsumable electrode d-c with forward polarity, according to the conditions shown for automatic welding in Table 93, is recommended.

For manual welding the current conditions are somewhat lower (by ~10%) than those shown in Table 90. The technology of welding is the same as that for argon arc welding of high-purity aluminum. For thicknesses of titanium to 3.0 mm a gap in the butt of 0.5 to 1.5 mm is allowed and it is recommended to conduct welding without filler metal. When filler metal of the composition of the weldment or of brand VT1 is used, the diameter of the wire is taken as d = s, i.e., equal to the thickness of the base metal. Before welding the edges of the titanium should be etched.

In connection with the high activity of titanium, ignition and extinguishing of the burner are produced outside the welded article — on special strips. After extinguishing of the arc no less than 0.5

Table 92. Tentative Conditions for Welding Tantalum and Niobium

Metal	Thickness of metal in mm	Current		Speed of welding, v_{CB} in m/hr (m/sec)		Length of arc in mm	Total expenditure of argon in liter/hr	Electrode	
		Argon-arc welding in amp	ELS*** [EBW] in ma	Argon-arc welding[1]	ELS[2]			Material	Diameter in mm
Tantalum	0,5	80	CO	39(0,01)	26 (0,009)	1,0-1,5	550-670	Tungsten or tantalum	2
	0,8	270	—	90(0,03)*	—	1,5-2,0	680-770	Tantalum	2
	1,0	270	80	54(0,015)	50 (0,009)	2,0-2,5	680-770	Tantalum	3
	2,0	250	—	24(0,01)	—	2,5-3,0	680-770	Tungsten	3
Niobium	0,2**	110	30	78(0,022)	33 (0,009)	0,5-0,8	550-670	Tungsten	1
	0,5	—	50	—	35 (0,01)	—	—	Tungsten	—
	0,75	90	—	39(0,011)	—	1,0-1,5	550-670	Tungsten	2
	1,0	200	80	51,5 (0,015)	33 (0,009)	1,5-2,0	680-770	Tungsten	3

*With a tungsten electrodes v_{CB} = 78 m/hr (0.02 m/sec).

**Joint with flanging of edges.

***Accelerating voltage 15 and 18 kv.

[1] Argon arc welding.

[2] Electron-beam welding.

Strength of base metal: tantalum 55.7-81.2 kgf/mm^2 (546-796 MN/m^2); 61.5-63.0 kgf/mm^2 (603-618 MN/m^2). Strength of welded joint: tantalum 47.9-57.7 kgf/mm^2 (469-568 MN/m^2; niobium 40.7-45.3 kgf/mm^2 (396-443 MN/m^2).

minutes should pass before the protective gas is turned off; otherwise the metal of the weld and the transition zone will be oxidized.

Table 93. Tentative Conditions for Welding Titanium [85]

Thickness of metal in mm	Diameter of tungsten electrode in mm	Voltage in v	Current in amp	Speed of of welding in m/hr (m/sec.)	Expenditure of argon in liter/min	
					in the burner	in the backing from reverse side of weld
0,8	1,0-1,5	8-10	45-55	18-25 (0,007)	6-8	3-4
1,0	1,5	10-12	50-60	18-22 (0,007)	6-8	3-4
1,2	1,5	10-12	55-65	18-22 (0,007)	6-8	3-4
1,5	1,5	11-13	70-90	18-22 (0,007)	9	3-4
1,8	1,5	11-13	80-100	18-22 (0,007)	9	3-4
2,0	1,5-2,0	11-13	110-130	18-22 (0,007)	9	3-4
2,5	2,0-2,5	11-13	150-180	20-22 (0,007)	9-12	3-4
3,0	2,5-3,0	12-13	200-220	20-22 (0,007)	9-12	3-4

An oxidized alloy is easily detected by external criteria. A good weld has a straw yellow color. A poor weld is characterized by black and gray color with the presence of blues (temper color) in the transition zone.

Table 94. Conditions for Arc Welding of Titanium Under Flux [91]

Thickness of metal in mm	Type of joint	Welding current in amp	Operating voltage in v	Speed of welding in m/hr
3-5	Butt	250-320	24-38	50
3-5	Corner	250-300	32-36	40-50
2-3	Lap	250-300	30-35	40

The strength of a welded joint in titanium and its alloys, depending upon the brand of the alloy and the methods of fusion welding, constitutes 0.6-0.8 of the strength of the base metal.

Welded joints of titanium alloys of the brands OT4, VT4, and others are not subjected to heat treatment in order to harden them. In individual cases annealing is applied for the removal of stresses.

Recently [35] industry has introduced electroslag welding of the alloy VT5-1, constituting titanium alloyed with up to 5% aluminum and up to 3% tin. This alloy possesses satisfactory weldability and increased strength at temperatures to 500°C under prolonged loads. The alloy is prepared chiefly by pressing with subsequent rolling to thin sheets, and also by forging of blanks with large sections. Welding of VT5-1 components with large sections is most complicated, but is successfully executed by the electroslag method with the flux AN-T2 [35] with shielding of the slag bath by argon of the 1st composition. The source of alternating current — a three-phase transformer — should possess a rigid characteristic.

For welding of forgings with, for instance, dimensions of 60 × × 60 mm the following conditions are recommended: I_p = 1600-1800 amp, U_p = 14-16 v, a gap between the edges of the welded forgings of 26 mm, a mass of filled flux of 130 g, and expenditure of argon for protection of the bath of 8 liter/min. According to [35], during the use of a laminar electrode with dimensions of 12 × 60 mm this regime ensures a stable process and satisfactory quality of the welded joint, not inferior to the quality of the base metal. During welding of presses profiles with large sections by approximately the same regime with a laminar electrode 8 mm thick, the strength of the welded joint is somewhat lower (by ~15-20%), this is due to the application in this case of laminar electrodes from unalloyed alloy VT1-1. Application

of alloyed electrode alloys does not ensure sufficient plasticity of the welded joint, owing to the considerable gas saturation of the pressed metal.

The strength of a welded joint of alloy VT5-1 made by the electroslag process corresponds to the following to average data:

Character and section of blank in mm	σ_b in kgf/mm^2 (MN/m^2)	Relative elongation of weld metal in %
Forging, 60 x 60	83,6 (720)	8,6
Pressed profile, 43 x 56	62,3 (511)	14,6
Pressed profile, 47 x 61	54,5 (532)	20,0
Pressed profile, 55 x 64	64,5 (532)	15,8

According to experimental data [45], a speed of fusion of 2 mm/sec is optimum for large blanks; within limits to 2.5 mm/sec there is no effect of the strength of the joint but a further increase leads to lowering of strength even with argon shielding.

It is best of all to mill the face or to clean it with emery paper before welding. The magnitude of upsetting, owing to the inclination of titanium to overheating, is selected as 15-20% greater than that for carbon steels. Tentative conditions of butt welding of titanium at an initial speed of fusion of 0.5 mm/sec are presented in Table 95.

Titanium of thicknesses up to 4 mm can be welded by line and spot welding on machines of the MTP and MShP type. According to [85], the height of the molten nucleus equals 80-90% of the total thickness of the sheets.

Tentative conditions for spot welding of titanium and its alloys [85] are presented in Table 96, and those for seam welding in Table 97.

Table 95. Conditions for Butt Seam Welding of Titanium [45]

Area of welded section in mm	Pressure of upsetting in kgf/mm^2 (MN/m^2	Overhand of blank from electrodes in mm	Allowance in mm in		Terminal velocity of fusion in mm/sec	Current of fusion in kiloamperes
			fusion	upsetting		
150	0,3 (2,9)	To 25	8	3	6	1,5-2,0
250	0,5-0,8 (4,9-7,8)	25-40	10	6	6	2,5-3,0
500	1,0-1,5 (9,8-14,7)	45	10	6	6	5,0-7,0
1000	2,0-2,5 (20-24)	50	12	10	5	5
1500	3-6 (29-59)	60	15	10	5	7,5
2000	4-10 (39-98)	65	18	12	5	10
2500	5-15 (49-147)	70	20	12	5	12,5
3000	10-20 (98-196)	100	22	14	4	15,0
4000	15-30 (147-294)	110	24	15	4	20,0
5000	20-40 (196-392)	130	26	15	3,5	25,0
6000	35-50 (343-490)	140	28	15	3,5	30,0
7000	30-50 (294-490)	150	30	15	3,0	35,0
8000	35-60 (343-588)	165	35	15	3,0	40,0
9000	45-90 (441-882)	180	40	15	2,5	45,0
10000	50-100 (490-981)	180-200	40	15	2,5	50,0

VNIIAVTOPROM [All-Union Scientific Research Institute of the Auto Industry?] has conducted successful work on percussion butt seam welding of tubes of VT-1-2 titanium 10-23 mm in diameter, with wall thicknesses of 1.0-1.5 mm, without gas shielding on a laboratory installation with a TKP-200-3 transformer of the "elektrik" plant. Before welding the metal was etched. The stablest results were obtained with reduction of voltage and an increase in the capacitance of the capacitors. The

welding conditions are presented in Table 98.

Table 96. Conditions for Spot Welding of Titanium and Its Alloys

Thickness of sheets in mm	Diameter of contact surface of electrodes in mm	Force on electrodes in kgf (N)	Duration of welding (passage of current) in sec	Time of compression of components in sec	Welding current in amp
0,8	4,0-4,5	200-250 (1969-2452)	0,10-0,15	0,1	7000
1,0	4,5-5,0	250-300 (2452-2952)	0,15-0,20	0,3	8000
1,2	5,0-5,5	320-350 (3148-3442)	0,20-0,25	0,3	8500
1,5	5,5-6,0	400-500 (3933-4913)	0,25-0,30	0,4	9000
2,0	6,0-7,0	500-600 (4913-5894)	0,25-0,30	0,4	10000
2,5	7,0-8,0	600-700 (5894-6875)	0,30-0,40	0,4	12000

Table 97. Conditions for Seam Welding of Titanium and Its Alloys

Thickness of sheets in mm	Width of seam in mm	Force on rollers in kgf(N)	Duration of welding in sec		Speed of welding in m/min	Welding current in amp
			impulse	pause		
0,8 + 0,8	3,5-4,0	300(2952)	0,1-0,12	0,18-0,20	0,8-1,0	6000
1,0 + 1,0	4,5-5,5	400(3933)	0,14-0,16	0,24-0,28	0,6-0,8	7500
1,5 + 1,5	5,5-6,5	500(4913)	0,20-0,24	0,3-0,4	0,5-0,6	10000
2,0 + 2,0	6,5-7,5	650(6384)	0,24-0,28	0,4-0,5	0,4-0,5	12000
2,5 + 2,5	7,0-8,0	800(7855)	0,28-0,32	0,6-0,8	0,3-0,4	15000

Optimum overhang for tubes 10 mm in diameter constitutes 1-1.5 mm, and that for tubes, pipes, 23 mm in diameter is 1.2-1.8 mm. At an overhang of <0.8 mm splash of the metal occurs, and at >2.2 mm there is displacement of the end faces and nonfusion; at $P_{осадки}$ less than 2100 kgf (20,703 N) there is nonfusion; at $U_{заряда}$ = 1900 v there is also nonfusion, but at $U_{заряда}$ = 2200 v, there is

splash. Fusion occurs inside and outside the tube in the form of a rim up to 1.5 mm in height and not more than 0.3 mm thick.

Table 98. Conditions for Percussion Butt Seam Welding of Titanium Tubes

Brand	Diameter of tube in mm	Capacitance in microfarads				
		Capacitance in microfarads	Charge voltage in v	Force of upsetting in kgf(N)	Overhang of tube from inserts in mm	Coefficient of transformation
BT-2-1	10 × 1	5000	850-900	900-1000 (8935-9806)	1-1,5	84
	23 × 1,5	7000	2000-2100	2300-2450 (22565-24036)	1,2-1,8	84

At the Riga electrical equipment plant spot welding of silver contacts of a magnetic starter has been mastered ("Welding production," 1962, No. 4). Special construction of the blade of the contact permits it to melt without changing the thermal state of contact.

Also mastered is the welding of silver contacts of thermal relays to a bridge of Br OF 6.5-0.15 bronze 0.25 mm thick. For exact fixing of the position of the contact there is a notch in the bridge in which the blade of the contact to be welded is inserted.

Spot welding is produced on a specially developed machine, the MTPK-25, according to the following conditions: Compression — 0.28 sec; welding, 0.22 sec; forging, 0.22 sec; pulse 0.04-0.06 sec; force of compression 80-100 kgf (784-981 with N).

The welding of contacts with diameters up to 7.5 mm is handled. There has been experience in the welding of silver contacts to bridges of steel covered by zinc, nickel, and chromium. However the quality of welding attained is only satisfactory with a layer of anticorrosion covering of no more than 10-12 μ.

CHAPTER X

NEW METHODS OF WELDING

In recent years new methods of welding are ever more developed: 1) cold; 2) press, which differs from the first only in the fact that it proceeds with heating of the parts; 3) diffusion; 4) spin; 5) ultrasonic; 6) electron-beam; and 7) explosive.

1. Cold Welding

Cold welding is carried out at normal temperature and thus the name. The suitability of this method for joining plastic metals (aluminum, copper and so forth) allows its wide application in electrical equipment production.

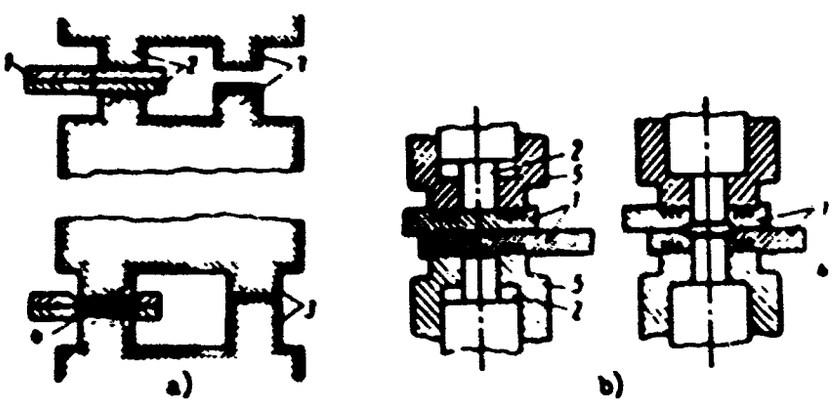

Fig. 128. Scheme of cold welding:
a) without preliminary pressing of parts, b) with preliminary pressing of a part. 1 – welded parts, 2 – punches, 3 – limiting stops, 4 – place of welding, 5 – preliminary clamp.

The mechanism of the formation of a welded joint in cold welding is explained by a metallic bond of the joined metals. This is realized through local pressure, according to the scheme presented in Fig. 128.

As a result of the introduction of one metal into the other there is an exchange of the electrons of the outer shells of atoms of the joined metals, and a common crystal lattice is formed.

To guarantee qualitative welding it is necessary that the metal at the points of joining be thoroughly purified of grease and oxidized films; this is carried out by chemical or mechanical methods.

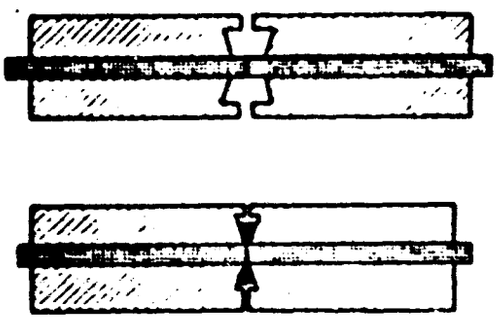

Fig. 129. Scheme of cold butt seam welding.

During welding of metals easily oxidized in air, as for example aluminum, the oxidized film is destroyed in the process of welding. Destruction of the oxidized film is promoted by the large specific pressure applied during cold welding. It exceeds the tensile strength by 3-4 times. The more fragile film of the oxide of aluminum is mechanically destroyed under the pressure and is displaced from the site of welding at the time of the introduction of one metal into the other. Mutual solubility of the metals is not obligatory.

There are two schemes of cold welding: lap and butt seam (see Fig. 129).

Both schemes are carried out during welding by round or rectangular points. Welding as a solid seam is possible. Cold butt welding at present is applied only in the welding of wires with sections up to [illegible] mm². The specific pressure for aluminum is $p_{уд}$ = [illegible] kgf/mm²

(294-784 MN/m^2), and for copper $p_{уд}$ = 80-250 kgf/mm^2 (784-2352 MN/m^2), depending upon the compositions of the alloy.

The pressure is transmitted by punches of the desired form and dimensions, which press into the welded metal to a depth of up to 95% of the thickness of the parts.

I. B. Baranov recommends the following specific pressures for lap welding of aluminum: at s = 0.5-1.0 mm, $p_{уд}$ = 100-125 kgf/mm^2 (980-1126 MN/m^2), and at s = 0.5-2.0 mm, $p_{уд}$ = 150-175 kgf/mm^2 (1317-1616 MN/m^2) [12].

Welding occurs not only under the working part of the punch, but also in the peripheral zone. With an increase in the dimensions of the working flanges of the punch the strength of the welded joint is increased.

During welding with preliminary pressing of parts (Fig. 128b), prior to the pressing in of the punches 2 the welded components 1 are pressed by clamp 5, and then punches (of a certain shape) are introduced into the metal and complete the process of welding.

Welding by the given scheme permits the welding of medium and large thicknesses of aluminum and copper and increases the strength of the welded joint by 30-35% as compared to welding according to the scheme presented in Fig. 128a.

During welding of aluminum busbars more than 10 mm thick, a circular groove is made in the clamp around the holes for the punches; this is filled by displaced metal at the time of the introduction of the punches.

The groove is provided for the purpose of decreasing the counteraction of the welded metal to plastic deformation.

Cold welding is carried out on special equipment produced by the industry. Welded joints are shown on Fig. 130. Cold welding is used to produce joints of aluminum with aluminum; aluminum with copper, iron, nickel, zinc, and cadmium; copper with copper and silver; and lead with lead and with iron [52].

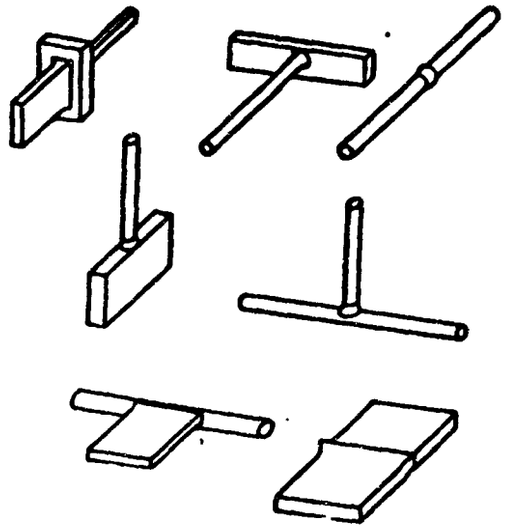

Fig. 130. Types of cold-welded joints.

In spite of the availability of stationary equipment, for instance the MKhSA-50 penumohydraulic machine, the widest propagation has been obtained by portable installations with manual hydraulic or lever clamps for welding aluminum and copper busbars by lapping.

Wires of various windings are welded on the MSKhS-5 machine. It permits welding of copper and aluminum wires with diameters of 3.5 mm for later drawing to a diameter of 0.7 mm without rupture, which indicates the high quality and ductility of the welded joint.

Small-size hand and table pilers [clamps] are used for welding of aluminum or copper wires end to end.

An over all view of tongs of the brands SNS-2 and KS-6 is presented in Fig. 131. The KS-6 tongs (Fig. 131a) are applied for manual cold butt welding of aluminum wires with sections up to 10 mm^2. They are equipped with four sets of clamp screw dies for standard wire sections of 2.5, 4.6, and 10 mm^2. Such light tongs are very convenient for use in the assembly of electrical equipment.

The SNS-2 tongs (Fig. 131b) are attached to a table; they are used for welding of aluminum wires with sections up to 25 mm^2 and copper wires to 10 mm^2.

Basic Technical Data of KS-6 Hand Tongs

Diameter of welded aluminum wires in mm .	1,7-2,6
Section of welded copper wires in mm^2....	2,5-4
Swing of the mobile clamp in mm.....	8
Force of upsetting in kgf(N).....	1200(11668)
Weight in kgf(N).....	1,4(13,7)

The special machines MSKhS-5, MSKh-30, and others produced by VNIIESO are used for butt welding of rods of aluminum and its alloys of considerable sections. The quality of welding depends upon the degree of the pressure of the rods in clamps and the magnitude of the overhang. The clamps contain grooves, which lets them hold the part more firmly. Table 99 shows the optimum values of overhang and strength of the welded joint during cold butt welding of technical aluminum of MSKhS machines.

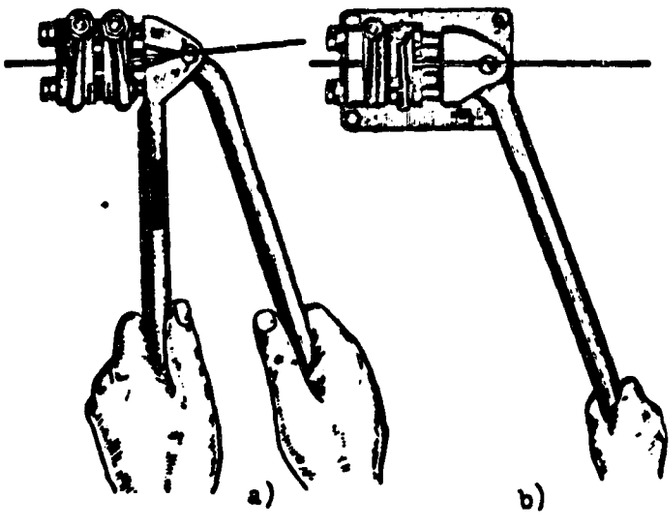

Fig. 131. Overall view of tongs for cold welding of wires: a) hand type KS-6, b) table type SNS-2.

Table 99. Regimes and Strength of Joints in the Cold Welding of Aluminum [12]

Diameter of blank in mm	Cross section in mm	Overhang during welding in mm	Ratio of length of overhang to diameter in %	σ_b in kg/mm^2 (MN/m^2)
8	50,2	4	50	6,6-6,8 (65-67)
10	78,4	4	40	7,7-7,8 (75-76)
10	78,4	5	50	7,7-7,9 (75-77)
10	78,4	6	60	7,6-7,9 (74-77)
12	111,2	5	42	8,2-8,3 (80-81)
12	111,2	6	60	8,5-8,6 (83-84)
20	314	6	30	6,85 (57)
20	314	7	35	6,65 (55)
20	314	8	40	6,65 (55)
Strip	200	6	60	7,75 (65)
20 × 20	200	7	70	7,8 (66)

According to the latest works of VNIIESO (Stroyman, I. M.), the basic brands of deformable alloys of aluminum, with the exception of the duralumins D1T and D16T, are welded well by butt cold welding; high strength of the joint is ensured. For samples with diameters of 10 mm, [welded] on the machine MSKhS-60, the following results are obtained for strength ("Automatic welding," 1962, No. 8) with a good aspect ratio, equal to 18-24%:

Brand	Yield Strength σ_b kg/mm^2 (MN/m^2).
AMTs	16 (157)
AM_g	19 (186)
AM_g5V	32 (314)
D1M	21 (206)
D16M	23 (225)
AM_g6	38 (373)

In refrigeration engineering evaporators are used which are prepared by an original method of cold welding of strips or sheets, on which the shape of a coil or a series of tubes is outlined with special point, so that when the strips are put on the figures coincide. Then cold rolling with a high degree of pressing produces welding of the strips. The places with paint remain unwelded, and all the other, well-cleaned places

are excellently welded. After annealing of the metal the paint burns, and compressed air or liquid applied to the "figure" inflates the unwelded places, so that the coil is obtained on the plane. Such evaporators are also installed on some brands of ordinary refrigerators.

2. Press Welding

Press welding of aluminum and its alloys is carried out according to the scheme on Fig. 128a; it is similar to "cold" welding, but differs in the fact that this process is conducted with heating of welded components up to considerable plasticity of the metal. Heating of components is carried out through stamps, which most frequently are heated by resistance windings. Induction heating from a h-f current generator is also possible.

This method of welding can be combined with stamping [56] and in this case, besides heating of the stamp, heating of the stamped sheet is produced. Such a technique accelerates the process of manufacture of welded articles.

The degree of heating of stamps for aluminum alloys lies within the limits 175-550°C, depending upon the chemical composition of the alloy, its thickness, and the degree of deformation. The greater the degree of deformation, the lower the temperature of heating.

The specific pressure, on the average, equals 120-150 kgf/mm^2 (1180-1470 MN/m^2). The degree of deformation can be within the limits 20-80%. The strength of joints of AMg alloys made by press welding is higher than those obtained by argon-arc welding.

During press butt welding it is necessary to consider the magnitude or overhang of the parts from the stamps. With considerable overhangs at the time of contact of the facets of the welded parts, the quality of welding is lowered and there is bending of the

overhanging parts.

Before welding the adjoining surfaces must be thoroughly cleaned by chemical or mechanical means. It is also recommended to apply both methods of cleaning; first chemical treatment, and after it mechanical - by clean steel brushes.

The time between the operations of cleaning and welding should be minimal.

In connection with the fact that the welding process proceeds with heating, oxidation of metal then occurs; however, the formed oxide films are destroyed in connection with the high degree of deformation of the metal and are displaced from the site of welding in the form of a burr.

Press welding proceeds best during joining of aluminum-manganese and aluminum-magnesium alloys.

This method provides excellent welding of sections of cooling radiators.

In the institute of electrical engineering of the Ukrainian Academy of Sciences, under the leadership of Academician K. K. Khrenov, welding of aluminum-magnesium alloy of the brand AMg6 of complicated profile with sections of 6000 and 10,000 mm^2 for building constructions has been mastered. The pressure of upsetting constitutes 120 kgf/mm^2 (1167 MN/m^2).

The results of tests of specimens for mechanical strength are presented in Table 100. Figure 132 shows a joint of the alloy AMg6VM, excellently made by press welding.

Impact toughness of the samples at the place of welding constitutes 50% of that of the base metal.

Table 100. Strength of Joints Made by Press Welding

Samples	σ_b in kg/mm^2 (MN/m^2)	Angle of bend in deg	Note
Basic metal AMg3.....	21,6 (202)	180	Samples had an overhang ensuring an increase in section by two times during upsetting.
Welded joint of AMg5....	28,3 (267)	150	
Welded joint of AMg3....	21,0 (196)	160	
Welded joint of AMg5V...	28,1 (265)	120	

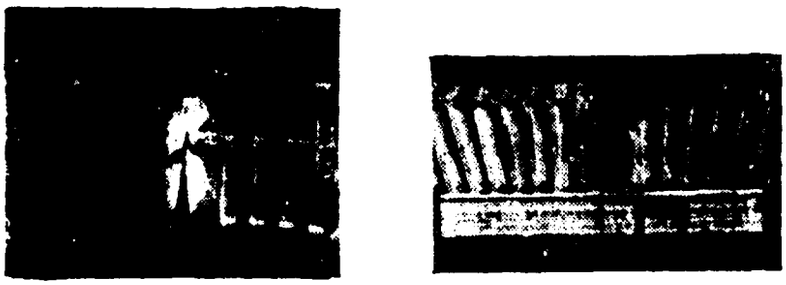

Fig. 132. View of a joint made by press welding of alloy AMg5VM.

3. Diffusion-Vacuum Welding

This new method of welding [63], [64], proposed by N. F. Kazakov, is excellent for use in joining nonferrous metals and, in particular, for making vacuum-tight welds. In this case pressure is applied on the part in a vacuum.

The process flows considerably more intensely with preheating of the articles to a temperature of 0.7-0.8 of the melting point. The selection of the preheating temperature is determined by the character of the weldment in the sense of its configuration and the thickness of the metal, the lower should be the temperature of preheating.

A special feature of this method of welding is the possibility to weld nonferrous metals among themselves and with ferrous metals. In practice units and combinations of metals are encountered which cannot be made by other methods, and only the described method ensures the minumum permissible deformation of article (accuracy of assembly)

and high quality of the weld.

The scheme of this method of welding is presented in Fig. 133. As can be seen, the welded components are placed in the working chamber of installation, were a vacuum of 10^{-3}-10^{-5} mm Hg is created. The process of welding is conducted with continuous evacuation of air, which promotes removal of the gases liberated from the welded metals. Special devices ensure pressure on the parts connected by planes, and thereby the best conditions are created for diffusion of one metal into the other and, consequently, for the formation of a weld. Heating of parts is carried out by a h-f current inductor or an ohmic heater, fed by current from the welding transformer of a contact machine.

To avoid oxidation of nonferrous metals, the removal of the vacuum after welding should not be performed before the temperature of the welded parts drops to 60-80°C.

Unfortunately, lot production of diffusion welding installations has not yet been set up and each enterprise must develop and manufacture the required installations on their own, in reference to the items to be welded. At NILDSV* under MTIMMP Moscow Technological Institute of the Meat and Dairy Industry machine-installations have been developed which allow speeding up the process by automation of loading and unloading of articles in the vacuum chamber; the necessary drawings of the installations will be sent on request.

The technique of diffusion welding, independently of the welded nonferrous metal, is carried out thus: air is pumped out of the chamber for 15-20 minutes and sometimes, with large-dimension articles, for 40 minutes and more. Then the article is heated, in the course of which gasses absorbed in the weldment metals are liberated and the pressure in the chamber rises. Evacuation continues, the vaccum is brought to

*An undentified "Scientific Research Laboratory" – [Tr. Ed. note].

10^{-3}-10^{-4} mm Hg, and the compressive force is applied. During this time welding occurs, lasting for 15-20 minutes. After this the heating is turned off and, without removing the pressures, the welded component is cooled.

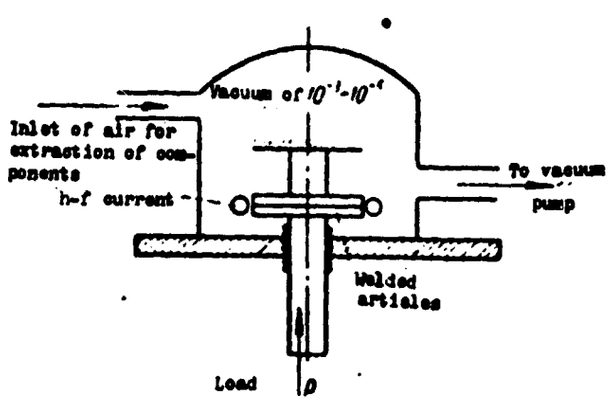

Fig. 133. Scheme of diffusion-vacuum welding.

Before welding, the parts are well cleaned and degreased. To avoid welding of the supporting surfaces to the welded articles, their points of contact are lubricated with a film of liquid glass, which should dry well, or a layer of ceramic with a rough surface is applied.

For welding nonferrous metals the tentative regimes [64] shown in Table 101 are recommended. The strength of the welded joints is close to the strength of the base metal.

Table 101. Tentative Regimes for Diffusion Welding in Vacuum

Welded metals	Temperature of heating in °C	Pressure in kgf/mm^2 (MN/m^2)	Duration of welding in minutes
Copper + copper.....	800	0,7 (6,9)	20
Copper + copper.....	880	0,56 (5,9)	8
Kovar + kovar.....	1000	2,0 (19,6)	25
Copper + kovar.....	850	0,5 (4,9)	10
Copper + aluminum.....	520	1,0 (9,8)	10
Aluminum (ADI) + kovar....	450	0,2 (1,9)	5
Copper + steel.....	850	0,5 (4,9)	10
Alloy:			
DIT + steel.....	370	0,2 (1,9)	10
DIT + copper.....	450	0,3 (2,9)	8
AMg6 + alloy of AMg6	500	0,5 (4,9)	10
Brass L72 + brass L72.....	750	0,8 (7,8)	5

4. Spin Welding [Russ: "Friction Welding"]

During friction of metals and nonmetals, without a lubricant, a considerable quantity of heat is liberated, which to a considerable degree has been considered in technology to be a harmful phenomenon (provoking, for instance burring of shafts, scorching of bearings, and so forth).

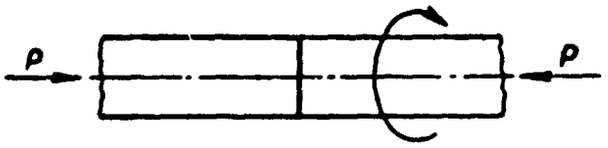

Fig. 134. Fundamental scheme of spin welding.

Lathe operator A. I. Chudikov proposed a method of welding cutting tools end to end on the usual lathe. This method has been used with success for the welding of nonferrous metals between themselves and with ferrous metals. Spin welding is carried out on special equipment for butt joining of different metals.

The scheme spin welding is presented in Fig. 134, from which it is clear that one component should revolve, and other should have an axial shift in the direction of the first component (or simultaneously revolve in the opposite direction).

Frictional force appears on the ends of these components and causes them to heat up to a certain depth. Thus, as a consequence of heat emission and axial force there appears plastic deformation of the end forces of the components. Upon cessation of motion and additional compression the parts are welded together.

The quality and productivity of spin welding are affected by the magnitude of axial force $P_{осевое}$ the speed of rotation and the degree of plastic deformation of the heated metal (Table 102).

Metallographic investigations show the presence of penetration with a smooth transition zone and criteria of work hardening.

Table 102. Tentative Regimes of Spin Welding at 3000 rpm, per VNIIESO

Designation of welded material	Diameter of sample in mm	Duration of welding in sec	Axial force $P_{осевое}$ in kgf (N)	End thrust $P_{осевое}$ in kgf/mm^2 (MN/m^2)	Total upset in mm
Aluminum ADI..	20	4	250 (2441)	0,8 (7,8)	3
Brass L62.....	16	3	660 (6462)	3,2 (31,4)	6-7
Aluminum + copper.....	30-50	4	6000 (58,830)	5,5 (52,9)	13

This method of welding does not require special preparation; however, coaxiality of the components during setup is obligatory.

With the application of special equipment such a method of welding is quite productive. It is possible to use an ordinary lathe of the DIP-200 type or others. Drilling and milling machines are also usable. However, due to their rapid wear from the sharp stopping under load, it is better to use special equipment, — for instance, machines of the type of the MST-1 or MST-2.

5. Ultrasonic Welding

This new form of welding, introduced into industry for joining metals and nonmetals, is also used for welding nonferrous metals.

The process is carried out according to the setup presented in Fig. 135. The welded parts 6 are pressed between two rods 4 and 5 with a certain force P, which varies with the thickness of the metal, the radius of curvature of tool 2, and the physical properties of the welded material. One of the rods is connected to a vibrator (it is tool 2), connected to magnetostriction 1, on which there is placed the winding of wires connected to the terminals of an ultrasonic generator of the necessary capacity. For cooling, the magnetostriction is surrounded by water 3. Alternating current with a frequency of 20-30 kc/s flows over the winding and causes mechanical oscillations in

the magnetostriction. These oscillations are transmitted to the vibrator.

Under the influence of the ultrasonic oscillations of the vibrator the pressed parts are brought to a state of welding at the points of contact.

Industry has released apparatuses for spot and seam welding according to the diagrams of the MEI [Moscow Power Engineering Institute], MVTU [Moscow Higher Technical School], and the A. A. Baykov Institute. These apparatuses are fed by current from lot-produced ultrasonic generators of the UZG type with power of 400 to 10 kw.

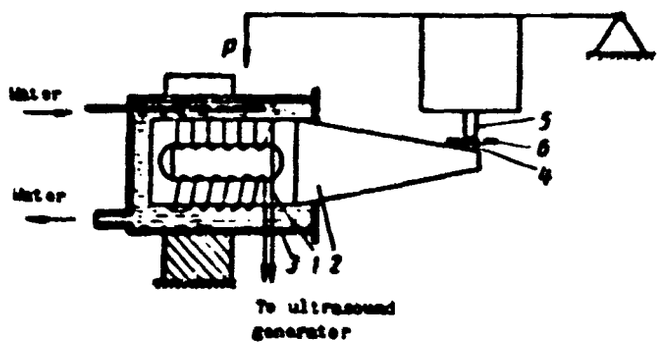

Fig. 135. Diagram of ultrasonic welding.

Tentative regimes for welding on a frequency of 20 kc are presented in Table 103. The diameter of the welded point, on the average, equals 4 mm.

Ultrasonic welding (USW) can be used to weld heterogeneous and uniform nonferrous metals, refractory metals (titanium, tantalum, and others) and low-melting metals, in spite of the fact that their weldability differs. A special feature of USW is the fact that welding depends on the thickness of only one metal — the thinnest. Zirconium, nickel, aluminum, and copper and its alloys are welded well. Brass is welded more poorly. Tinned and nickel plated components and air parts [illegible] [illegible] can be welded.

Table 103. Regimes for Ultrasonic Welding of Aluminum Alloys

Brand	Thickness in mm	Contact forces in kgf (N)	Duration of welding in sec	Amplitude of of ultrasound oscillations in μ
AI	0,3-0,7 0,8-1,2 1,3-1,5	20-30 (196-294) 35-50 (343-490) 50-70 (490-686)	0,5-1,0 1,0-1,5 1,5-2,0	– 14-16 –
AMg6T	0,3-0,5	30-50 (294-490)	1,0-1,5	17-19
AMg3M	0,6-0,8	60-80 (588-784)	0,5-1,0	22-24
D16AM	0,3-0,7 0,8-1,0 1,1-1,3 1,4-1,6	30-60 (294-588) 70-80 (686-784) 90-100 (882-981) 110-120 (979-1076)	0,5-1,0 1,0-1,5 2,0-2,5 2,5-3,5	 18-20 – –
D16AT	0,3-0,7 0,8-1,0 1,1-1,3 1,4-1,6	50-80 (490-784) 90-110 (882-979) 110-120 (979-1076) 130-150 (1175-1371)	1,0-2,0 2,0-2,5 2,5-3,0 3,0-4,0	– 20-22 – –
D1AM	0,3-0,7	30-60 (294-588)	0,5-1,0	14-16

The maximum temperature at the points of welding of copper [11] barely attains 300°C at s = 0.2 + 0.2 mm.

Many researchers consider that one should not prepare the point of welding for aluminum alloys. However, there are data [77] indicating the expediency of chemical (etching) preparation. It increases the strength of the joint by 25-30%. As L L. Silin et al. [97] points out, the stability of the results of USW is smaller than with spot welding. Examples of the application of ultrasonic welding include: welding of tombac outlets 0.3 mm in thickness to copper caps with wall thicknesses of 0.4 mm; lap welding of copper conductors; welding platinum-iridium alloy PI-10 in the form of contacts (1.5 × × 1.5 × 0.4 mm) to argentan springs and beryllium bronze of brand B-2 0.15 mm thick. The last two are done by the regimes:

with argentan
Force of compression in kgf (N)..... 20 (196)
Duration of welding in sec..... 0,1
with B-2 bronze
Force of compression in kgf (N)..... 30 (294)
Duration of welding in sec..... 0,2

Ultrasonic welding of cermets of brands SN-40 and OK-15 to bronze Br. OF 6.5-0.15 and steel St. 08 in thicknesses up to 2 mm have also been mastered. The work was conducted on the UZSM-1 machine, fed by a UZG-10 generator, on the regime: amplitude of oscillations 12-14 μ, force of compression 100 kg, duration of welding 0.6 sec.

6. Electron-Beam Welding in Vacuum

This method is used to join refractory and light metals of small thicknesses. During welding of easily oxidized metals (molybdenum, zirconium, tantalum, and others) an electron beam created in a vacuum of 10^{-5}-10^{-7} mm Hg is used. For electron emission a special electron gun with focusing of the beam by mechanical (focusing head), electrostatic (lens) or magnetic (field compressing the electrons into a bundle) methods is applied.

As an example of the basic arrangement of the gun, Fig. 136 shows the construction of a gun from the Institute of Metallurgy imeni A. A. Baykov of the Academy of Sciences.

The electron gun is the basic organ of all installations for welding with an electron beam. A second organ is the high-voltage current supply source of the installation. Frequently used for this purpose is a rectifier of lot-produced X-ray installations, for instance the VS50/5 with voltage of 50 kv and current of 50 ms. A third very important organ of installations for EBW is the vacuum system, ensuring the proper vaccum of 10^{-4} to 10^{-6} mm Hg.

This system is assembled from standard lot-produced equipment: a fore pump, a diffusion pump (or aggregate), and measuring equipment. Depending upon the volume of the chamber of the EBW installation, in the vacuum system should ensure pumping out of up to 250-300 liter/sec, so that this cycle will occupy approximately up to 30 sec.

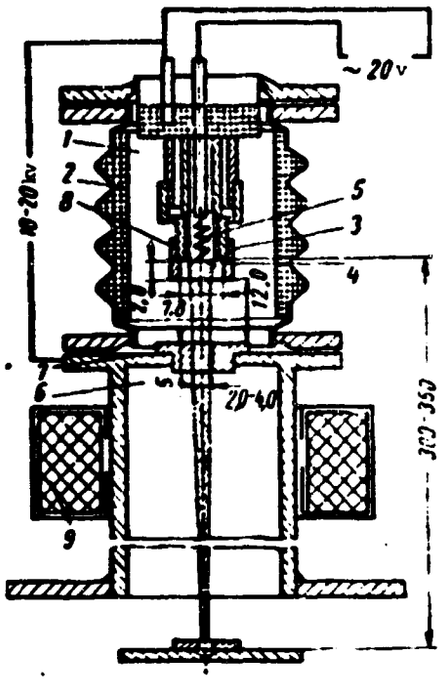

Fig. 136. Diagram of arrangement of electron gun:

1 – cathod block, 2 – insulator, 3 – cathode of indirect heating, 4 – layer of lanthanum, hexaboride, 5 – tungsten spiral, 6 – colled anode block, 7 – moylbdenum or niobium anode, 8 – focusing molybdenum cap, 9 – electromagnetic lens.

The chamber has parts for observation of the welding process and a device for remote handling of welded articles or, if the welds are small in extent, the gun should allow shifting of the beam by electrical control. The control panel is installed on the chamber or outside it.

Cathode block 1 (Fig. 136) is built inside insulator 2, with the help of which the gun is isolated from the chamber. Cathode 3 is made of tantalum with spray-coated layer 4 of lanthanum hexaboride. This layer is made to increase the emissive power of the cathode. The cathode is heated by tungsten spiral 5 made of 0.3 mm wire; it ensures heating of the spiral to 1650°C at a power drain of up to 150 w. Focusing molybdenum cap 8 is under the potential of the cathode. Lens 9 is intended for finer focusing of the beam. It is in the form of a coil mounted on the anode. With the help of the focusing device it is possible to deflect (shift) the beam.

The described gun [33] will provide a heated spot 0.6-0.8 mm in diameter at a voltage of 14-16 kv and current of 50-60 ma. The diameter of the spot can be brought to 1.0-1.5 mm (at currents of about 100 ma); can be increased current to 300 ma and the voltage to 20 kv. Similar devices, also for industrial application but somewhat superior in construction, have been developed by the Moscow Higher Technical School, MEI, and the Ye. O. Paton Institute of Electric Welding.

A tentative regime for welding with metal thickness of 1 to 1.5 mm is as follows: beam current 30-35 ma, operating voltage 30-32 kv, power 900-1000 w, and speed of welding 3.68-8.2 m/hr (0.002 m/sec). With this a weld width of about 4 mm is obtained. This method of welding will find ever greater application in instrument-making and in construction of special apparatus.

7. Welding By Explosion

This latest form of welding is accomplished by the cumulative force of the propagation of a blast wave. The explosive used is filled hexogen ($C_3H_6O_6N_6$) with a density of 1.2 g/cm^3 (10^3 kg/m^3).

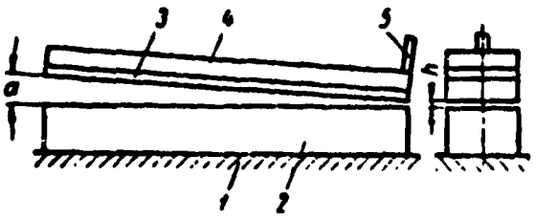

Fig. 137. Scheme of wilding by explosion.

The pressure in the detonation products is $p = 130 \times 10^3$ atm ($1275\ 10^7$ N/m^2) at a speed of 6600 m/sec.

By this method (see diagram in Fig. 137, [99] and others), it is possible successfully to weld copper, the titanium alloy OT4, and aluminum, and also steel with copper or with the titanium alloy OT4.

In accordance with Fig. 137, the welded components are set up with a gap h = 2 mm at angle $\alpha = 2\text{-}7^\circ$ to one another. The charge 4, laid on

weld plate 3, is set off with detonator 5. The other weld plate 2, is set on solid base 1.

According to [99] , the strength of a joint of steel 1Kh18N9T with copper is 16.8 kg/mm^2 (165 MN/m^2) and with aluminum, 7.2 kg/mm^2 (71 MN/m^2), i.e. fully satisfactory. It is obvious that after the development of industrial attachments for welding this method will find a place in welding technology.