UNCLASSIFIED

AD NUMBER

AD655246

NEW LIMITATION CHANGE

TO

Approved for public release, distribution unlimited

FROM

Distribution: Further dissemination only as directed by U.S. Naval Oceanographic Office, Attn: Code: 4420, Washington, DC 20390, JUN 1967, or higher DoD authority.

AUTHORITY

USNOO Notice, 25 Jan 1972

THIS PAGE IS UNCLASSIFIED

DOCUMENTS
D203.26/2:
67-50

[redacted]

NAV

IR NO. 67-50

INFORMAL REPORT

MANUAL OF SIMPLE FIELD TECHNIQUES FOR MEASURING WATER LEVEL FLUCTUATIONS AND SURFACE CURRENT PATTERNS

LIBRARY
JUL 28 1971
U.S. NAVAL ACADEMY

WILLIS S. GLIDDEN
DONALD A. BURNS
Coastal Oceanography Branch
Exploratory Oceanography Division
Research and Development Department

20070119 114

JUNE 1967

The opinions and assertions contained in this report are solely those of the author(s) and should not be taken as an official or inferred official opinion of the Naval Oceanographic Office, Department of the Navy, Department of Defense, or United States Government.

Distribution of this document is unlimited.

NAVAL OCEANOGRAPHIC OFFICE
WASHINGTON, D. C. 20390

INFORMAL REPORT

The Informal Report (IR) as produced at the Naval Oceanographic Office is a means for personnel to issue timely scientific and technical preliminary reports of their investigations. These are primarily informal documents used to report preliminary findings or useful byproducts of investigations and work to members of the scientific and industrial communities.

Informal Reports are assigned sequential numbers for each calendar year; the digits preceding the dash indicate the year.

The distribution made of this report is determined primarily by the author. Information concerning obtaining additional copies or being placed on a distribution list for all future Informal Reports in a given area of interest or specialty field, should be obtained from:

Distribution Control Department
Code 4420
Naval Oceanographic Office
Washington, D. C. 20390

ABSTRACT

This manual is designed to provide the non-professional hydrographer with the necessary techniques for taking water level and current measurements in rivers and canals. Those techniques which negate the need for sophisticated field equipment are stressed. Examples of data recording forms and instructions are provided to aid in collecting field observations

This report has been reviewed and is approved for release as an UNCLASSIFIED Informal Report.

APPROVED FOR RELEASE: M. W. Burkhart
Director
Exploratory Oceanography Division

DATE: 23 June 1967

TABLE OF CONTENTS

	Page
INTRODUCTION	1
WATER LEVEL MEASUREMENTS	1
Staff Gage	2
Water-Streak Gage	2
RIVERINE DATA SHEET	5
CURRENT MEASUREMENTS	8
1. Free-Float Method	8
2. Log Line Method	11
3. Confined Submerged Drag	11
4. Estimating Current Speed from Vessels Rate of Travel	16
Procedure	23
GENERAL BIBLIOGRAPHY	26

FIGURES

1. STAFF GAGE	3
2. WATER-STREAK GAGE	4
3. SAMPLE OF DATA RECORDING FORM	6
4. DISTRIBUTION OF VELOCITIES OF WATER FLOW IN A CONDUCT	9
5. DISTRIBUTION OF VELOCITY OF WATER FLOW IN A NATURAL STREAM	10
6. SPEED VS. TIME	12
7. BALLASTED CURRENT FLOAT	13
8. CURRENT DROGUE	14

FIGURES (CONTINUED)

Page

9. CURRENT DRAG; ANGLE INDICATOR 15

10. WIRE LENGTH CORRECTION FOR WIRE ANGLE 17

11. CONFINED SUBMERGED DRAG IN OPERATION 18

12. CARRUTHERS JELLY BOTTLE 21

13. PRICE CURRENT METER 22

14. CM^2 CURRENT METER 24

TABLE

1. VELOCITY IN KNOTS AS A FUNCTION OF WIRE ANGLE FOR A 1' X 1.5' DRAG WEIGHING 26 1/4 LBS. IN WATER 19

MANUAL OF SIMPLE FIELD TECHNIQUES FOR MEASURING WATER LEVEL FLUCTUATIONS AND SURFACE CURRENT PATTERNS

INTRODUCTION

Success or failure of military operations depends to a large extent on our knowledge of the operational environment. This is particularly true in a delta-type riverine area where the environment changes rapidly. For example, if a river patrol craft has a scheduled time of arrival at a destination eighty miles upstream from a given point, what time should the craft leave base allowing for variable river and tidal currents which may assist or oppose it? When the craft arrives at its destination, what will the water depth be at the docking area? What is the daily or hourly water level fluctuation? How much time can be spent at a destination before the water level falls below a safe operating draft?

Reliable answers to these questions depend upon precise, accurate, and timely measurements, predictions of water level fluctuation, and current speed and direction.

This manual briefly describes some simple techniques and instruments for spot and serial measurements of water level fluctuations, current direction, and current velocity. Examples of data recording forms and instructions are provided.

WATER LEVEL MEASUREMENTS

The principal reasons for recording water level fluctuations are:

(a) To accumulate data sufficient in quantity, quality, temporal and geographic distribution; to develop accurate and reliable predictions of water level and water depths for any time and location in the delta waterways. Hourly observations over at least a two week period (preferably 30 days) are required to establish the effects of astronomic tides at any one station. When only shorter period measurements can be made (hourly for one or two days), observations should be made, if possible, at or near time of new or full moon to obtain maximum effect of the astronomical forces.

(b) To supplement, evaluate, and correct predicted water levels so as to provide information for planning, immediately in advance of an operation.

Water levels may be expressed in two ways: (1) With reference to an arbitrarily selected level, such as the lowest water level recorded for several

days; or (2) in actual elevation above mean sea level or above a chart datum. This second method requires a permanent point of known elevation (bench mark) to be used as a reference marker, which may not be readily available. The first method is the easiest to use and is generally adequate for short period observations and is the one described below.

Staff Gage

The simplest method for measuring water level fluctuations is to use a staff gage (Figure 1). A simple staff gage consists of a graduated board placed in a vertical position at a suitable, convenient place near the side of a stream or canal, or attached to a retaining wall, dock, boat slip, breakwater, pile, stake, or similar structure. It should be so placed so that the lower marked end is always below the minimum water level. Such a staff gage may be constructed from a board about 6 inches wide, 1 inch thick, and longer than the known variation in water level. The approximate range of water level fluctuation may be shown by the discoloration along a stream bank, the side of a piling, wharf or other structure. If possible, paint the board white with graduations marked in black at intervals of 1 foot and tenths of a foot to about 2 feet below the expected minimum low water line, and to about 2 feet above the expected high water mark. Lable the one-foot graduations 0, 1, 2, 3, 4, etc., with the zero mark at the bottom, divide each one into tenths and mark the graduation with a short line. If the staff is to be driven into the ground, allow at least 3 extra feet on the staff height for this purpose. Heavy stones placed around the staff base will provide extra support. Make sure the staff is vertical (if available use a plumb bob or level).

When reading the staff gage, the only required entries in the log book are time and gage reading. Care should be taken to make sure that, if the staff is removed and later returned, the exact position (horizontal and vertical) is reoccupied.

Water-Streak Gage

Another method for measuring water level fluctuations, is to secure a weight of about 8 pounds to a graduated line (Figure 2); suspend the line from some fixed overhanging support, such as a tree branch or two A frames, on which is established a reference mark (a nail will do) and lower the line until the free end just touches the moving water, making a streak. The reading on the line opposite the reference mark is recorded. To prevent the weight from skipping in a swift current, a small peg or nail is inserted in the bottom of the weight and the line is lowered until the peg touches the water surface.

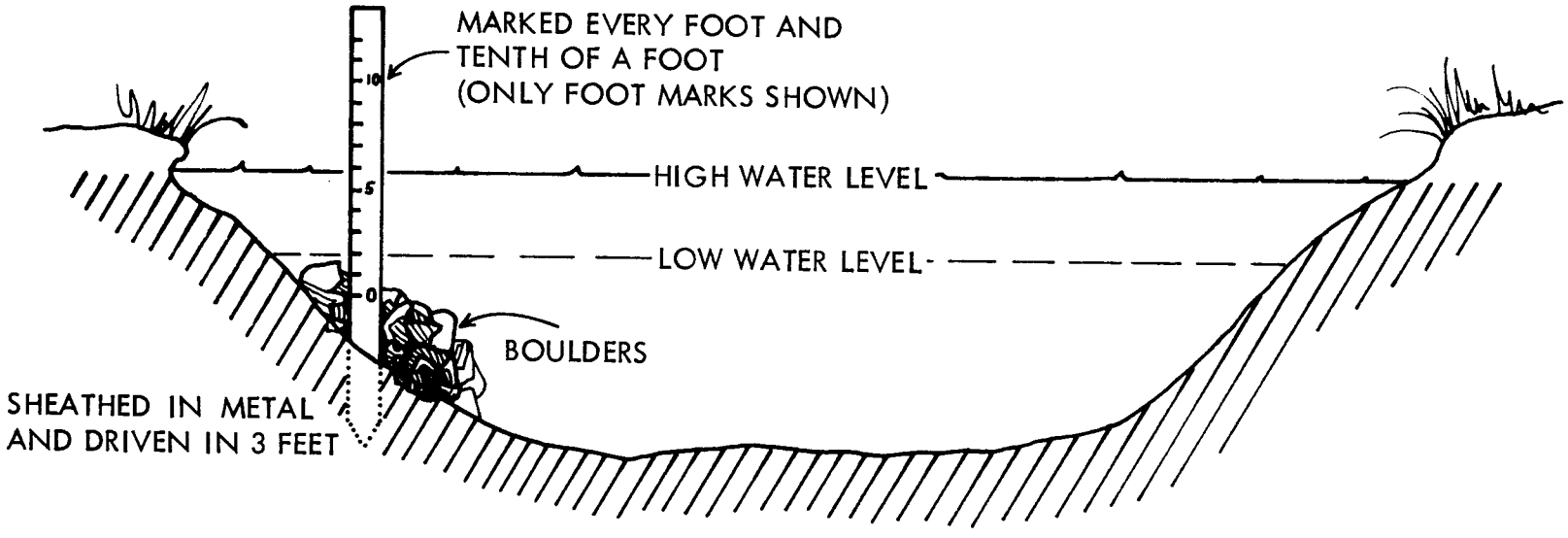

FIGURE 1. STAFF GAGE

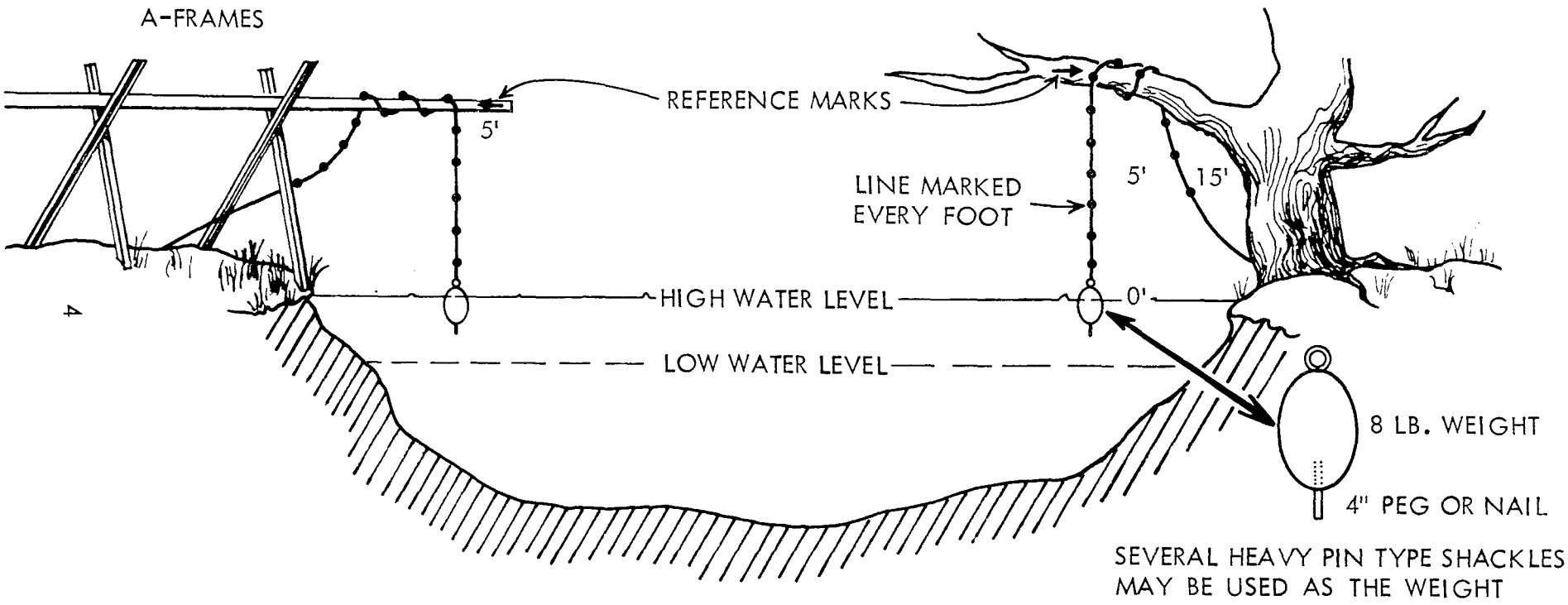

FIGURE 2. WATER-STREAK GAGE

Before using or marking, the line should be:

1. Stretched tightly between two trees or posts.

2. Wet thoroughly and allowed to dry.

3. Restretched to take up slack.

4. Wet thoroughly and allowed to dry.

Before marking the line, it is important that the line be stretched with a tension of about 1/2 pound more than weight to be attached. The line should be marked at one-foot intervals, with colored cloth or string such as white for foot markers and a different colored marker for every fifth foot. The colored string, or cloth, should be fastened securely to the line. The water-streak gage is read to the nearest whole foot, counting from zero at the water surface, to the reference mark and estimated to the nearest half foot. The reading and the time of observation is recorded in the log book. Water level should be recorded, if possible, every hour except near high and low water, when 15 or 30 minute readings are desirable. Daylight observations over a period of 13 consecutive hours should be made. Forms for recording data are provided, bound as a pad. A sample form and instructions for recording data are given in Figure 3.

Riverine Data Sheet

Date: Enter date as day, month, year

11 3 67

Observer: Initials of observer

Previous days of weather: Indicate (if known) if it rained yesterday. If it rained for several days, indicate approximate Number.

Name of stream (Canal): Use most common name (if any).

Tributary to: What major waterway does it join?

Dredged: Visually estimate (if possible) whether or not stream or canal has been dredged. Also indicate if stream or canal is silted over in any place. Heavy silting may occur at entrances and midway down a canal or stream. Look for signs of vegetation in stream or canal as indication.

RIVERINE DATA SHEET

DATE_____ OBSERVER_____ PREVIOUS DAYS WEATHER_____

NAME OF STREAM (CANAL)_____ TRIBUTARY TO_____ DREDGED_____

TRAFFIC TYPE_____ VEGETATION_____

STA. NO.	LOCATION (MAP COORD:, NEAREST TOWN, OR OTHER SIGNIFICANT FEATURE)	TIME (LOCAL)	GAGE *(FT.)	DEPTH (FT.)	CURRENT				
					DIR.	FLOAT OR DROGUE TRAVEL (IN FT.)	TRAVEL TIME (SEC.) $t_1 = \frac{1}{1}$ ___ $t_2 = \frac{1}{1}$ ___ $t_3 = \frac{1}{1}$ ___ SUM___ AV.___	SPEED (KNOTS)	DEPTH

SAMPLE PAGE OF LOG BOOK

* INDICATE TYPE GAGE USED
SG - STAFF GAGE
WSG - WATER STREAK GAGE

FIGURE 3. SAMPLE OF DATA RECORDING FORM

Traffic type: Type and draft of craft most commonly seen. Indicate (if known) frequency of craft moving through stream while you are working in area. Example: 7 small (20') fishing boats passed during a 3 hour period.

Vegetation: If known, indicate type most frequently seen i.e., mangrove, eel grass, etc.

STA. NO.: Number stations consecutively for each field trip.

Location: Where is station? Draw a sketch if necessary to show location.

Time: Indicate local time when observations are made.

Gage: Height of water at gage. Indicate type of gage used. Staff Gage or Water Streak Gage.

Depth (Ft.): Measure stream or canal depth at or near stream center. Use leadline or pole.

Current:

Direction: Indicate direction towards which current is flowing: In a narrow stream or canal this may be up or down or across the stream. In a larger body of water this direction will (or may) vary with time. Use a compass for direction.

Float or Drogue Travel (in Ft.): Length of Measured Course; 100 ft., 200 ft.

Travel Time (Sec.): Repeat observations 3 times if possible and average the readings.

Speed (Knots): Current speed in knots.

Depth: Depth: Depth below surface of water of current measurements (ft.).

The zero of the tide staff, water streak gage or any other water level instrument used should be connected, if possible, with one or more existing bench marks or a reference mark should be established. This will make possible replacement of the staff at the same elevation and will preserve the datum plane so that the data from different stations can be related to each other and adjusted to a common datum.

A boulder, rock ledge, a permanent and substantial building or any prominent feature unlikely to move is best for location of bench marks. A small cross, cut into the rock, or a copper disk or bolt sunk into the rock, will make a suitable bench mark. The type and location of the bench mark should be carefully described on the data sheet before recording water level measurements.

CURRENT MEASUREMENTS

Accurate current predictions are necessary in planning any operations involving closely coordinated arrivals of river craft, land vehicles, and aircraft. Obviously the speed of a vessel upstream is decreased by the current velocity and its downstream speed is increased by the current velocity. Rainfall upon the watershed and tidal variations are the major influences upon currents in the canals and rivers and they vary seasonally and with distance from the sea. Current speed in the waterways is increased or decreased and current direction may reverse with changes in tide.

The distribution of current velocity in streams and canals is controlled by the shape, size, slope, and roughness of the channel. Normally the maximum velocity of a straight section of stream occurs in midstream and in shallow streams it occurs near the surface, but in deep streams maximum velocity is at about one-third the total depth below the water surface. Current velocities will normally be lowest near the shore and close to the bottom. In most streams the mean velocity will be located between 0.55 and 0.65 of the depth below the surface and the measured velocity at 0.60 depth will be within 5 percent of the computed mean velocity. The mean velocity will also normally be within 0.80 to 0.95 of the surface velocity. Contours of equal velocity and velocities at specific points in the cross section of uniform channel are shown in Figure 4. Figure 5 demonstrates the cross sectional distribution of velocities in a natural stream with an irregular bottom. Notice that the highest velocities are on the deepest side of the channel near the right bank and at a depth of approximately 9 inches.

Several simple methods for measuring surface and near-surface currents in inland waterways are described:

1. Free-Float Method

The simplest way to measure surface currents is to throw a can, wood chip or other object that will float, and record the time it takes to travel a measured distance. A beer can, pint bottle, or piece of scrap lumber is adequate. A 100 foot or 200 foot course is measured along a straight stretch of stream or canal. Observers are stationed at both ends of the measured course. The can or bottle is thrown into the center of the stream and upstream from the upstream marker. As the free-float passes the upstream marker, the observer calls out "mark" and the downstream observer records the time on his wrist watch. As the free-float passes the downstream observer, he calls "end" and records the time. The difference in time (seconds) (i.e., the time required to travel the measured course) is listed on the log sheet.

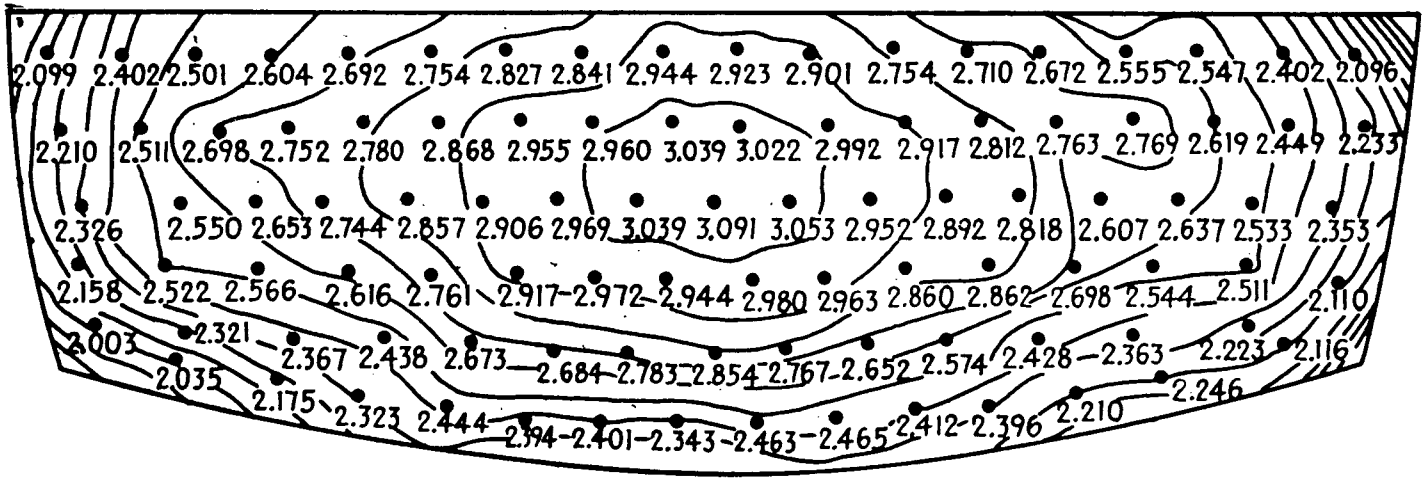

FIGURE 4. DISTRIBUTION OF VELOCITIES OF WATER FLOW IN A CONDUIT

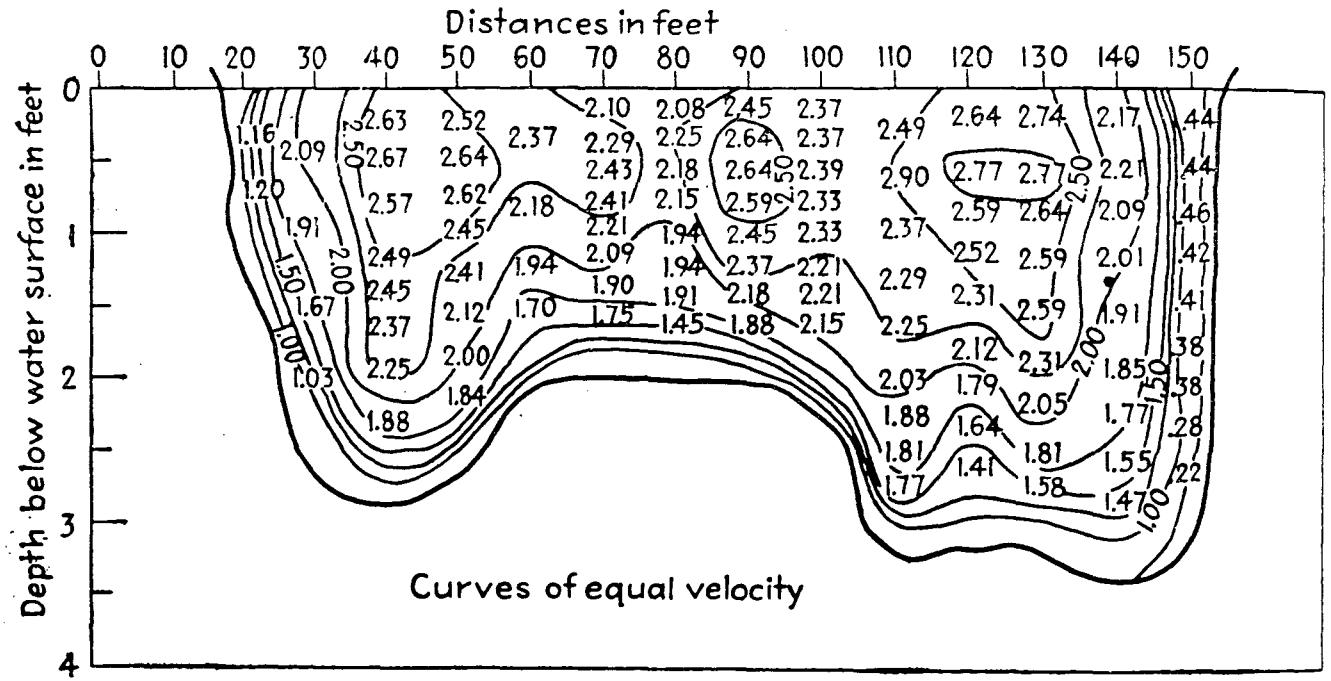

FIGURE 5. DISTRIBUTION OF VELOCITY OF WATER FLOW IN A NATURAL STREAM

This operation should be repeated 3 times and the readings averaged. The graph in Figure 6 is entered with the average time on the vertical axis and read across to intersect either the 100-foot section or 200-foot section line and read down to find speed in knots. Record time of observation and velocity in the log book. The direction of current should be expressed as UPSTREAM (away from the sea or major tributary) or DOWNSTREAM (toward the sea or major tributary).

2. Log Line Method

Measurements using a log line must be made from an anchored vessel or other stationary platform. Equipment required consists of a ballasted float or current drogue similar to those shown in Figures 7 and 8, 150 to 200 feet of nylon line, and a stopwatch or watch with a sweep second hand.

As described earlier, the mean velocity in the vertical is located near the 0.6 depth (Example: 6 foot depth in a stream of 10 foot average depth). If the current drogue Figure 8 is used, the sheet metal fin might be attached as shown in Figure 8 with a length of wire or cord sufficient to place it at this mean depth in order to obtain a realistic current velocity measurement.

The nylon line (log line) is attached to the top of the ballasted float or the drogue. The line is marked (knots) at 10-foot intervals beginning about 50 to 100 feet from the point of attachment. The float is placed in the water and allowed to move with the current. Beginning with the first marker as zero, the time required to run out 100 feet (10 markers) of line is recorded. Using the chart Figure 6, the current speed in knots is obtained and recorded on the data sheet. The direction of the current (direction in which the line streams) is noted and recorded. Ideally a pelorus should be used to determine the current direction, but if none is available direction should be estimated using the boat's compass.

3. Confined Submerged Drag

In waters where a vessel may be bow anchored for a few minutes, this technique offers a simple but accurate method of measuring currents ranging from 0 to 2.47 knots at depths from the surface to 50 feet. The procedure described uses a 1 x 1.5 foot drag weighing 26 1/4 lbs. in water as described in Figure 9.

The drag and its weight is attached to the end of the line (hydrographic wire). The pulley (block) should be suspended as far out from the anchored ship as possible. At each depth, the angle between the ship's

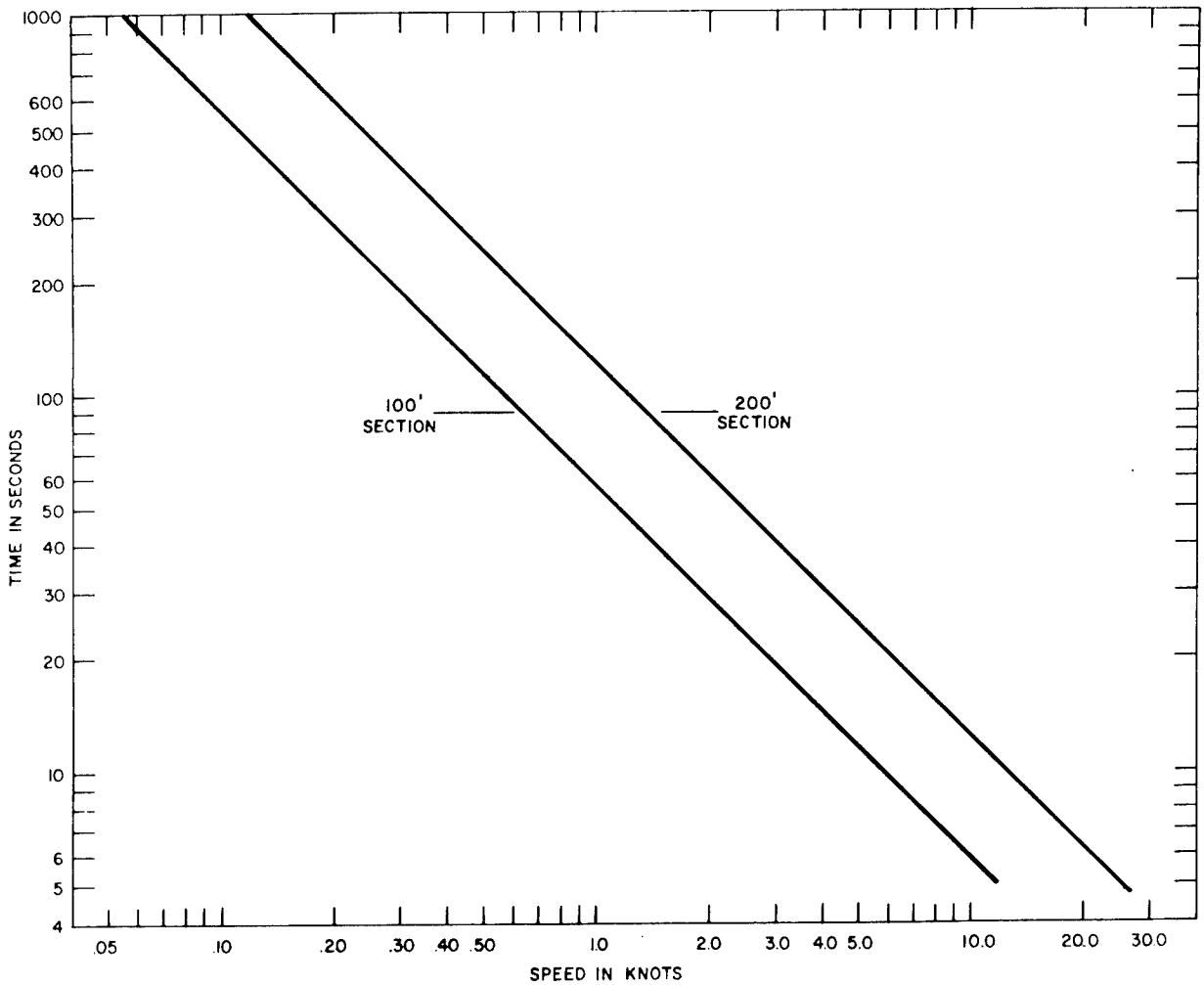

FIGURE 6. SPEED VS. TIME

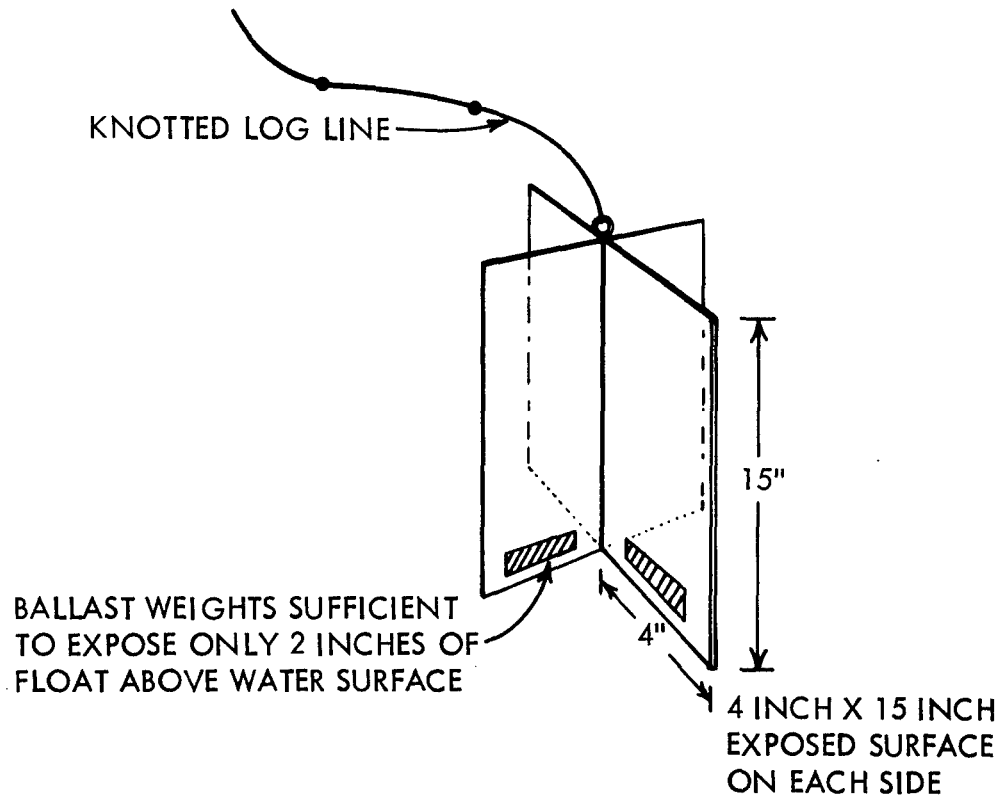

FIGURE 7. BALLASTED CURRENT FLOAT. CONSTRUCTED OF 1/4 TO 3/4 INCH THICK WOOD OR PLYWOOD PANELS AND BALLASTED WITH METAL STRIPS.

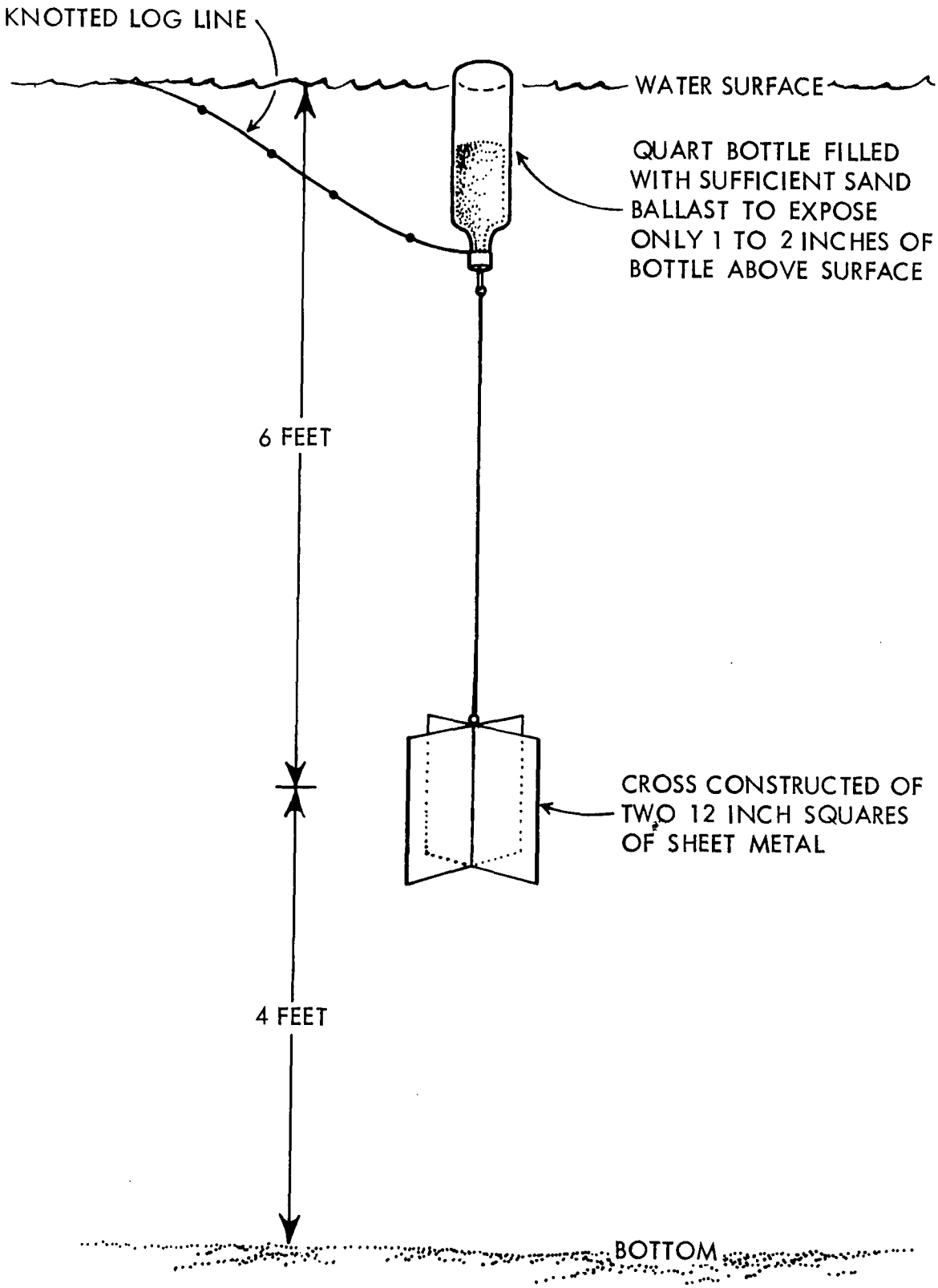

FIGURE 8.. CURRENT DROGUE. MAY BE USED WITH KNOTTED LOG LINE OR AS A FREE FLOATING MARKER.

A. CURRENT DRAG

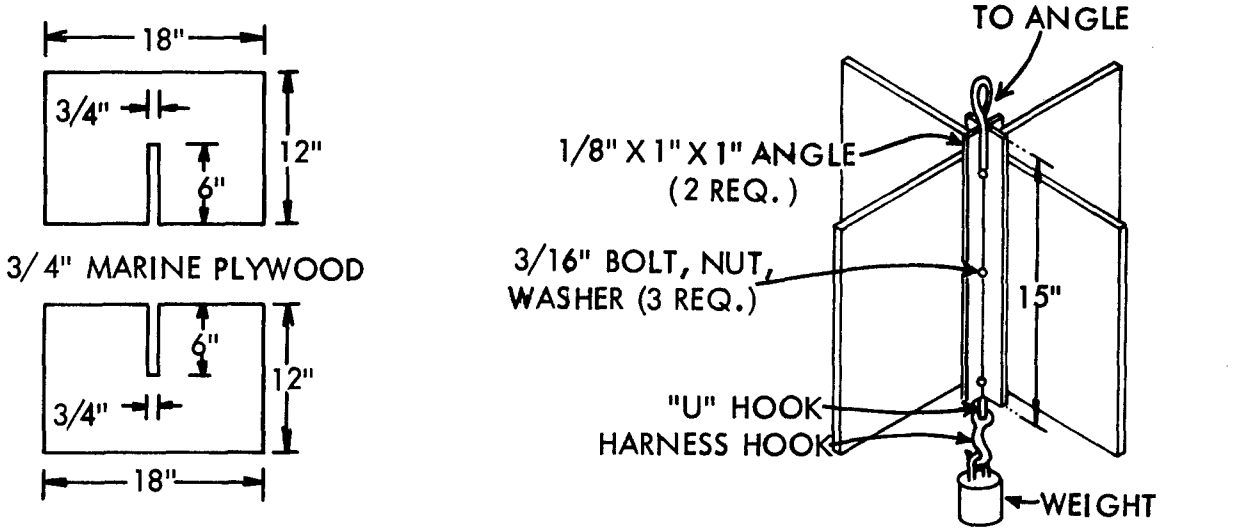

B. ANGLE INDICATOR

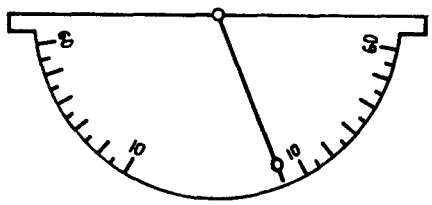

FIGURE 9.

heading and the plane made by the wire and the vertical is measured with a horizontally held wire angle indicator (Figure 9). The ships compass heading is corrected by adding or subtracting the measured angle to obtain the true direction of current flow. A graph, Figure 10, is used to determine the amount of line (wire) needed to place the drag at the desired depth. When the drag is at the desired depth, the angle is measured with a wire angle gage as diagrammed in Figure 11. After recording the angle, Table 1 is used to determine the speed of the current in knots. This speed is recorded on the data sheet.

The free float method of current measurement is recommended where no equipment is available for other current measurements. The log line method should be used in preference to the free float method. Measurement of current speeds in excess of 2.47 knots must be obtained by the log line for accurate results. Greatest accuracy at current speeds of less than 2.47 knots and for current measurements deeper than the surface can be made with the confined submerged drag method.

4. Estimating current speed from vessels rate of travel

When known distances are traveled, as between buoys or shoreline markers, and the speed of a vessel in "dead" (no current) water is known, the current velocity can be computed by subtracting the speed of the boat from the rate in knots at which the vessel travels the known distance. A positive (+) value indicates that the current is flowing with the vessel and a negative (-) value indicates that the current is against the vessel.

Example (1): Vessel's known speed in "dead" water = 10 knots. Vessel travels 1 nautical mile distance between 2 buoys in 5 minutes or at a speed of 12 knots. Thus 12 - 10 = 2 knots. Current in the same direction the vessel is traveling.

Example (2): Vessel's known speed in "dead" water = 10 knots. Vessel travels 1 nautical mile distance between 2 buoys in 10 minutes or at a speed of 6 knots. Thus 6 - 10 = 4 knots. Current in direction opposite to that vessel is traveling - 4 knots.

Many instruments for measuring current velocity and direction have been designed. Some of the more common ones are described here. None of these can be jury-rigged, however, if they can be obtained they will provide more precise measurements than the methods already described.

The Carruthers simple current meter uses a bottle, half filled with jelly, and a compass floating in it. This meter is especially useful for measuring bottom currents. The bottles are sent-down fixed to a weight or to a

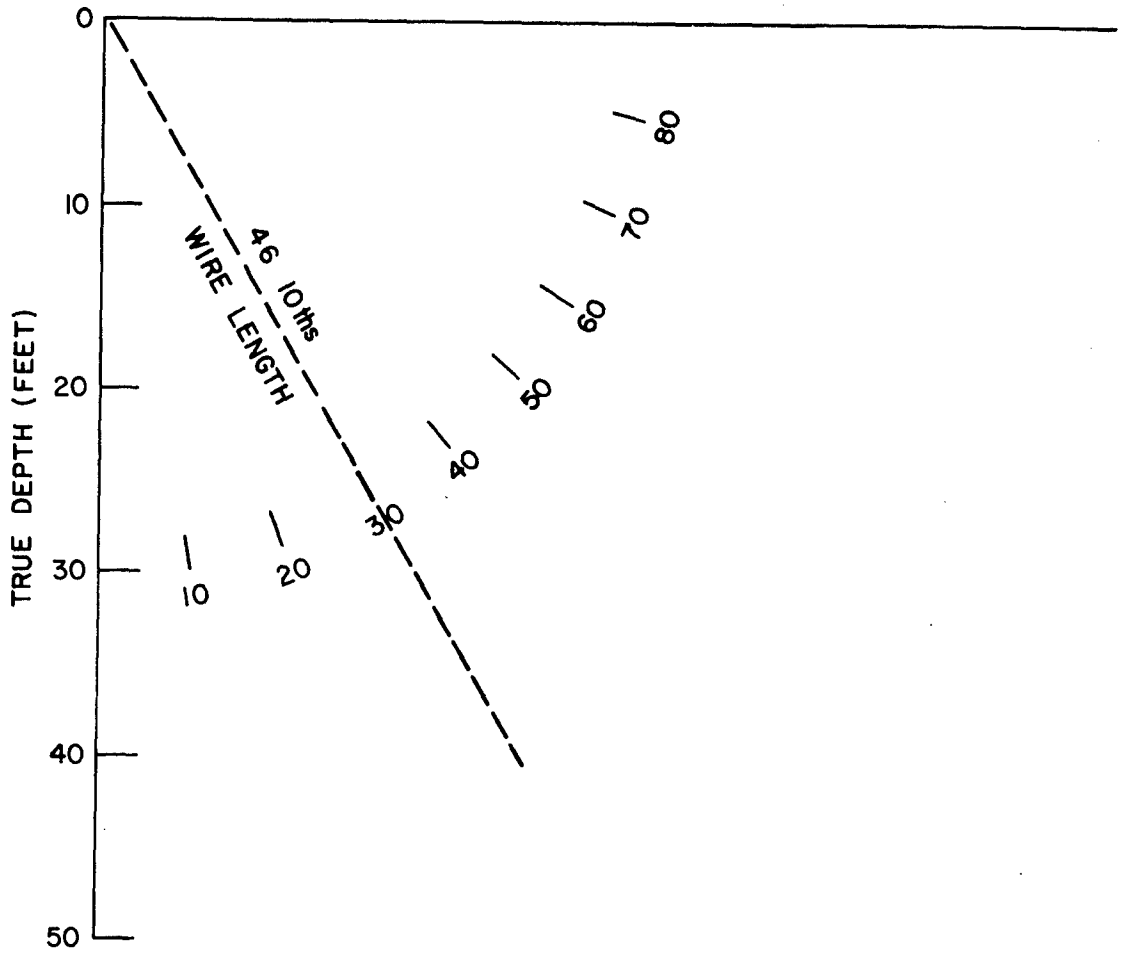

LENGTH OF A LINE IN 10THS WILL YIELD WIRE LENGTH (IN FEET) THROUGH ANY ANGLE NEEDED TO ATTAIN DEPTH AT INTERCEPT

EXAMPLE: LINE SHOWN THROUGH 30° IS 46 10THS LONG, I.E. 46 FT. AT 30° TO REACH DEPTH OF 40 FT.

FIGURE 10. WIRE LENGTH CORRECTION FOR WIRE ANGLE

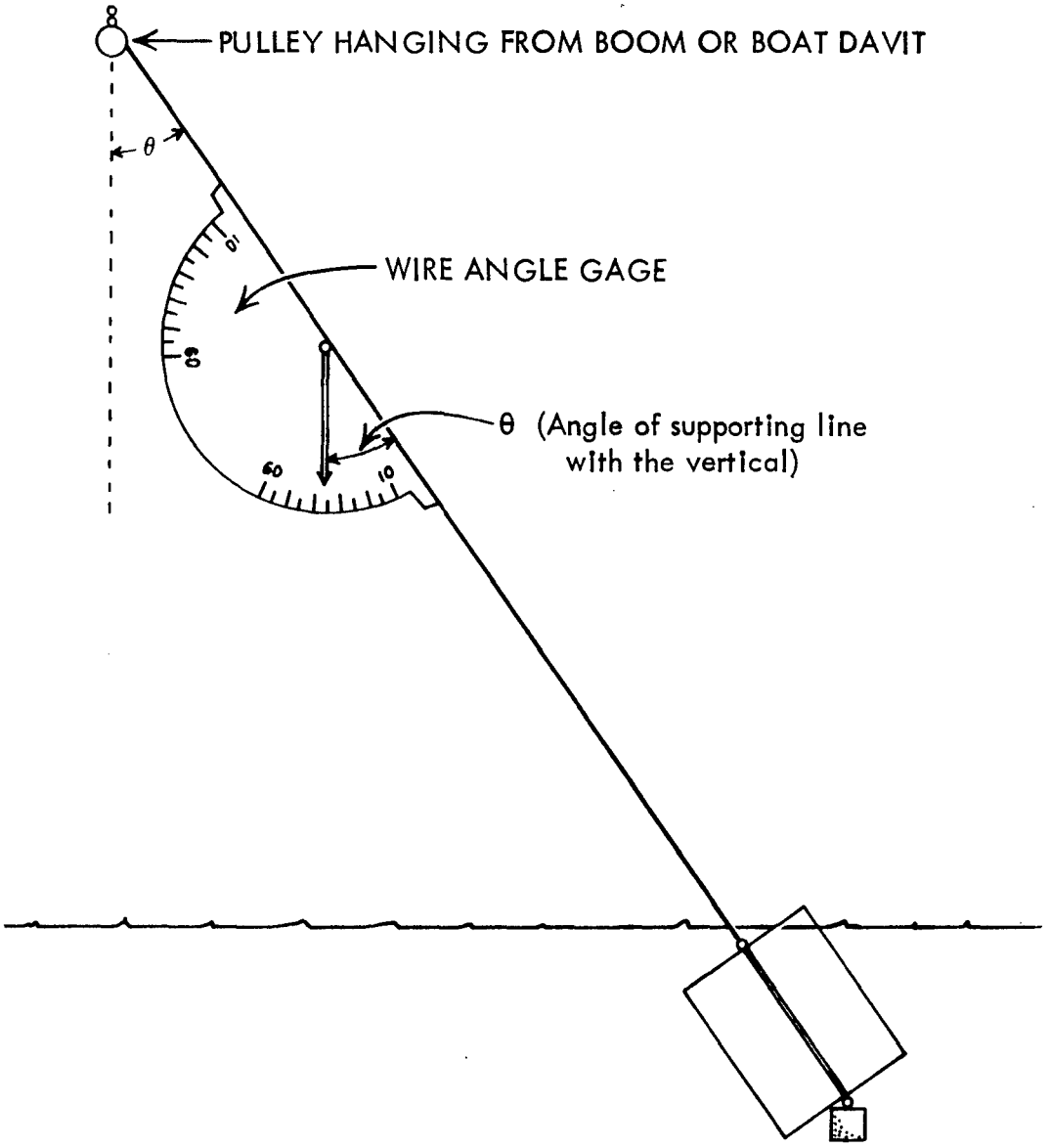

FIGURE 11. CONFINED SUBMERGED DRAG IN OPERATION

TABLE 1

VELOCITY IN KNOTS AS A FUNCTION OF WIRE ANGLE
FOR A 1' X 1.5' DRAG WEIGHING 26 1/4 LBS. IN WATER

WIRE ANGLE (°)	0	1	2	3	4	5	6	7	8	9
0	0	.30	.43	.53	.61	.68	.73	.81	.86	.92
10	.97	1.01	1.06	1.10	1.15	1.19	1.23	1.27	1.31	1.35
20	1.39	1.43	1.46	1.50	1.53	1.57	1.61	1.64	1.68	1.71
30	1.75	1.78	1.82	1.85	1.89	1.92	1.96	2.00	2.03	2.07
40	2.11	2.14	2.18	2.22	2.26	2.30	2.34	2.38	2.42	2.47

special neutrally buoyant holder at the desired depth by means of anchored buoys. The jelly bottle is tilted by the current, the cold water solidifies the jelly and the amount of tilt gives, from calibration tables, the current speed. The compass gives the direction of tilt, hence the direction of current (Figure 12).

Continuous current meters are available, which record currents and their direction for two weeks. These are suspended in the water by buoys and anchors. There are also several other types of simple current meters, such as Carruthers current cones, etc. A more expensive and complicated instrument for measuring surface currents is the Geomagnetic Electro Kinematograph (G.E.K.). This works on the principle that an electric current is induced when a body of water moves in the earth's magnetic field. Special skill is needed for handling this instrument.

The Eckman current meter measures velocity by the number of turns of a propeller. A statistical distribution of current directions is provided by the release of copper shot into compartments which rotate in relation to a compass.

Figure 13 is a drawing of the Price current meter, which is the instrument most frequently used for stream survey work. The carefully balanced bucket wheel of this instrument is mounted on a pivot to provide minimum friction. The vertical wheel shaft extends into the enclosed contact box where rotations of the shaft are transmitted through a set of gears to a make, and break, mechanism connected to two exposed binding posts. The meter yoke is connected to a guide vane which, when the instrument is in use, keeps the bucket wheel headed into the current. The bucket wheel assembly and its attached guide vane are carried on either a cable suspension or a rod suspension. When suspended from a cable, a 15 lb. or heavier streamlined weight is attached immediately below the meter to stabilize the instrument. A set of flexible wires, a dry cell battery, and an earphone complete the equipment.

When assembled and placed in the stream, the flow of water causes the bucket wheel to rotate. If the upper binding post is connected in the electrical circuit, each rotation of the wheel will be transmitted to the earphone as a single click; if the lower binding post is connected, a click will be transmitted for each five revolutions. The latter arrangement is used for high current velocities (speeds in excess of 1.5 knots).

A rating chart is supplied with each instrument. The operator must have a stop watch or a watch with a sweep second hand, since the time

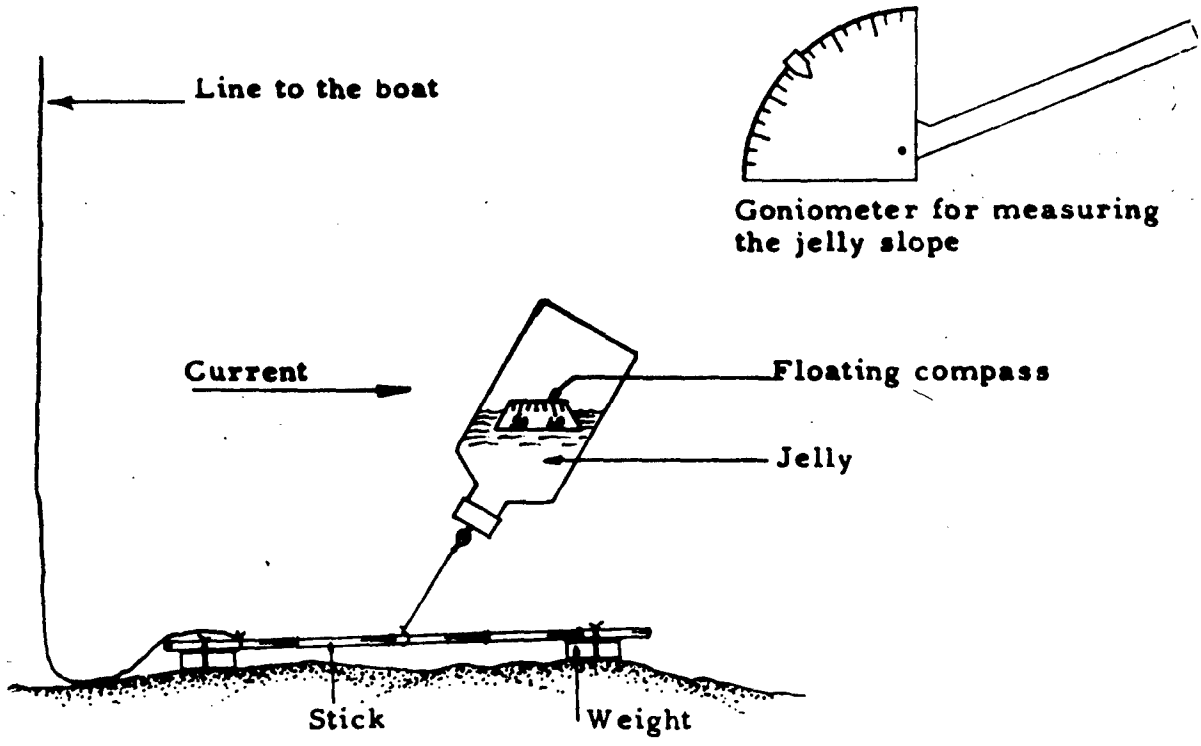

FIGURE 12. CARRUTHERS JELLY BOTTLE

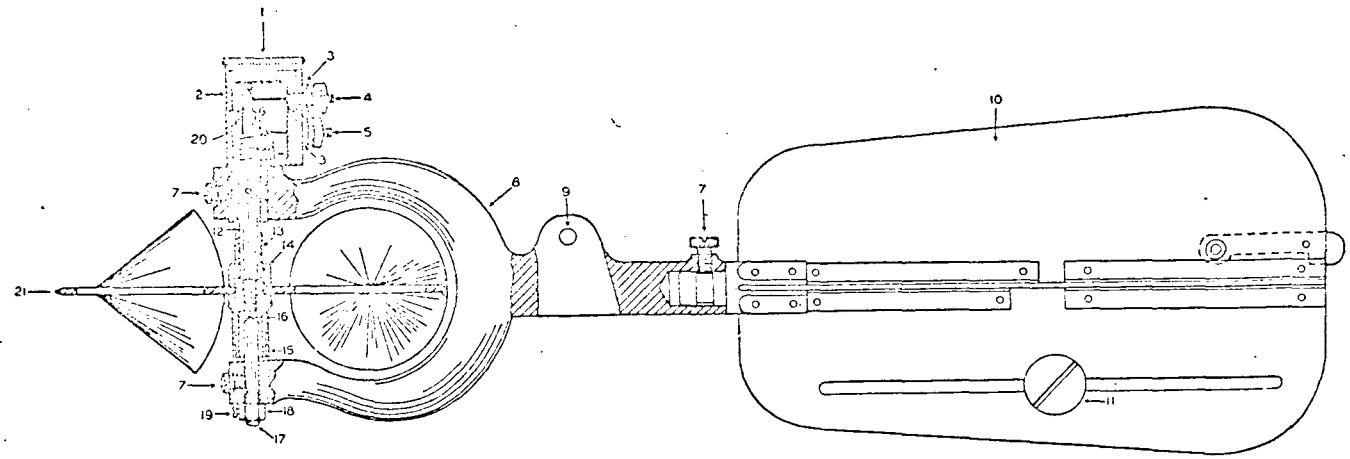

EXPLANATION

1. CAP FOR CONTACT CHAMBER
2. CONTACT CHAMBER
3. INSULATING BUSHING FOR CONTACT BINDING POST
4. SINGLE-CONTACT BINDING POST(UPPER)
5. PENTA-CONTACT BINDING POST (LOWER)
6. PENTA GEAR
7. SET SCREWS
8. YOKE
9. HOLE FOR HANGER SCREW
10. TAILPIECE
11. BALANCE WEIGHT
12. SHAFT
13. BUCKET-WHEEL HUB
14. BUCKET-WHEEL HUB NUT
15. RAISING NUT
16. PIVOT BEARING
17. PIVOT
18. PIVOT ADJUSTING NUT
19. KEEPER SCREW FOR PIVOT ADJUSTING NUT
20. BEARING LUG
21. BUCKET WHEEL

FIGURE 13. PRICE CURRENT METER

interval for each observation must be known.

Procedure:

1. The instrument is suspended from cable at the desired depth, with a weight for stability, or lowered at the end of metal rod or staff supplied with the instrument. For a single reading, the meter, if placed at 0.6 average stream depth, will give an approximate mean average velocity. When two depths can be measured, readings taken at 0.2 and 0.8 of average stream depth and the resultant velocities averaged, will provide a more nearly correct mean velocity.

2. After the instrument becomes stable, the number of clicks heard through the earphone are counted during a 60-second interval. If the upper binding post is used in the circuit, each click represents 1 revolution of the bucket wheel; if the lower binding post is used, the number of clicks counted is multiplied by 5 to get the correct number of revolutions of the bucket wheel.

3. The rating table, supplied with the instrument, is used to convert the revolutions per minute to current velocity in knots.

The CM^2 current meter (Figure 14), or General Oceanics Bottom Current Velocity and Direction Recorder is a free instrument, without depth limitations, for making a single recording of bottom current velocity and direction.

To make a bottom current measurement, the recorder with an anchor weight is dropped overboard into the water where the instrument free falls to the ocean floor.

Upon dissolution of a soluble link, a recording of current strength and direction is preserved, as the instrument is released from the anchor to float to the surface, where it is recovered and its recording noted.

The entire assembly consists of the recording sphere; a separable plastic free floating tube; and a glass ball for providing flotation. A small cone shaped current weight is the expendable portion of the device.

Because of the size, weight, and simplicity of operation, only one person is required for all phases of field use. For night use, a small light source is available. This battery powered accessory fits inside of the glass flotation ball and is actuated when the assemble surfaces.

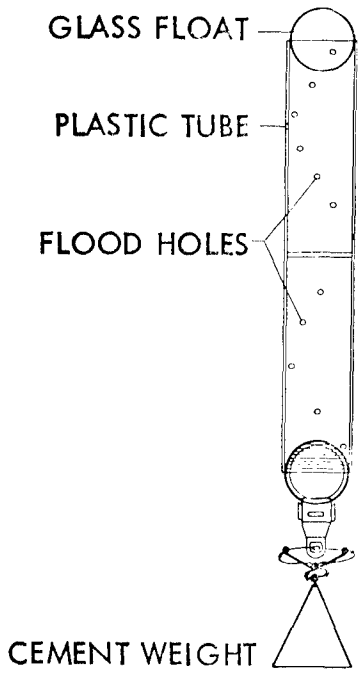

A. BOTTOM CURRENT AND VELOCITY INDICATOR

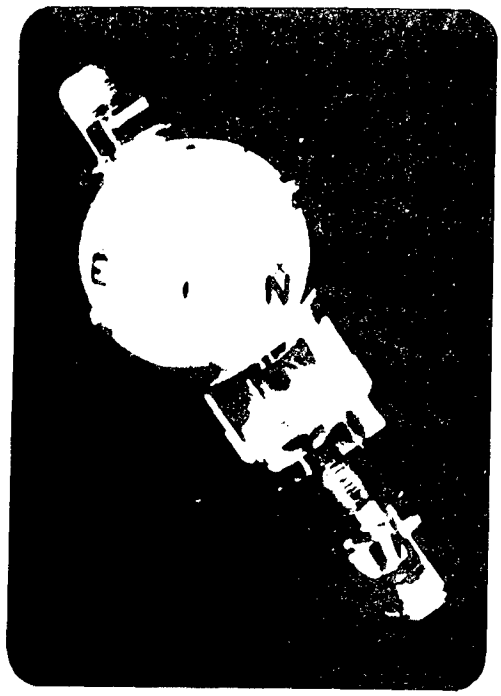

B. RECORDING SPHERE

FIGURE 14. CM^2 CURRENT METER

Specifications: Total weight including anchor: 2 kilograms

Total length with tube and flotation: 1 meter

The value of data collected depends upon the completeness and clarity of the records. Therefore, the adequate recording of data is highly important and every care should be exercised to record legibly and neatly.

The following guidelines should be used:

1. Use detailed tabular forms whenever possible. This is one of the best means of insuring completeness, brevity, and orderly arrangement of data.

2. Do not use loose pieces of paper. Enter all records in the record book.

3. Draw one diagonal line through items thought to be in error; do not erase, and do not pull out or throw away any material considered to be inaccurate.

4. Enter all field records with a good-quality pencil; avoid using ink because of danger of wetting.

5. Enter all information in clear concise, direct language; avoid use of extra words which add nothing essential to records.

6. Record all data at the moment they are secured. Never trust your memory.

7. Exact time and date of record (observation). This is extremely important, as all relationships of remote observations with records from established tide gages and current stations are dependent on time correlations.

8. Print all entries.

9. Make all computations on regular sheets of the record book and preserve them.

10. Keep all original records in a secure place.

GENERAL BIBLIOGRAPHY

U. S. Department of Commerce, "Coast and Geodetic Survey Manual of Current Observation," Special Publication No. 215. U. S. Government Printing Office, Washington, D. C., 1950, 87 pp.

U. S. Department of the Interior, "Geological Survey Stream-gaging Procedure, A manual describing methods and practices of the Geological Survey," Water-Supply Paper 888, U. S. Government Printing Office, Washington, D. C., 1945, 245 pp.

Food and Agriculture Organization of the United Nations, "Manual of Field Methods in Fisheries Biology," Provisional Edition, FAO, Rome, 1960, 152 pp.

King, H. W., C. O. Wisler, and J. G. Woodburn, "Hydraulics," John Wiley and Sons, Inc., New York, 1948, 351 pp.

Lagler, Karl F., "Freshwater Fishery Biology," William C. Brown Company, Dubuque, Iowa, 1952, 360 pp.

Welch, Paul S., "Limnology," McGraw-Hill Book Company, Inc., New York, 1952, 538 pp.

Welch, Paul S., "Limnological Methods," The Blakiston Company, Philadelphia, Toronto, 1948, 381 pp.

UNCLASSIFIED
Security Classification

DOCUMENT CONTROL DATA - R & D

(Security classification of title, body of abstract and indexing annotation must be entered when the overall report is classified)

1. ORIGINATING ACTIVITY *(Corporate author)*

U. S. Naval Oceanographic Office

2a. REPORT SECURITY CLASSIFICATION

Unclassified

2b. GROUP

3. REPORT TITLE

MANUAL OF SIMPLE FIELD TECHNIQUES FOR MEASURING WATER LEVEL FLUCTUATIONS AND SURFACE CURRENT PATTERNS

4. DESCRIPTIVE NOTES *(Type of report and inclusive dates)*

Informal Report

5. AUTHOR(S) *(First name, middle initial, last name)*

Willis S. Glidden and Donald A. Burns

6. REPORT DATE

7a. TOTAL NO. OF PAGES

32

7b. NO. OF REFS

7

8a. CONTRACT OR GRANT NO.

b. PROJECT NO.

HF 003 04 01

c.

F31-32-DGE

d.

9a. ORIGINATOR'S REPORT NUMBER(S)

IR NO. 67-50

9b. OTHER REPORT NO(S) *(Any other numbers that may be assigned this report)*

None

10. DISTRIBUTION STATEMENT

Distribution of this document is unlimited.

11. SUPPLEMENTARY NOTES

12. SPONSORING MILITARY ACTIVITY

U. S. Naval Oceanographic Office

13. ABSTRACT

This manual is designed to provide the non-professional hydrographer with the necessary techniques for taking water level and current measurements in rivers and canals. Those techniques which negate the need for sophisticated field equipment are stressed. Examples of data recording forms and instructions are provided to aid in collecting field observations.

DD FORM 1 NOV 65 1473 (PAGE 1)

S/N 0101-807-6801

UNCLASSIFIED
Security Classification

14. KEY WORDS	LINK A ROLE	LINK A WT	LINK B ROLE	LINK B WT	LINK C ROLE	LINK C WT
MANUAL OF SIMPLE FIELD TECHNIQUES FOR MEASURING WATER LEVEL FLUCTUATIONS AND SURFACE CURRENT PATTERNS						