AD 654695

RADC-TR-67-52
Final Report

ANALYSIS OF INTEGRATED CIRCUIT PACKAGE INTEGRITY USING HELIUM LEAK DETECTION TECHNIQUES

Edgar A. Doyle, Jr.

TECHNICAL REPORT NO. RADC-TR-67-52
May 1967

This document has been approved for public release and sale; its distribution is unlimited.

JUL

DE-65-10

Rome Air Development Center
Air Force Systems Command
Griffiss Air Force Base, New York

ANALYSIS OF INTEGRATED CIRCUIT PACKAGE INTEGRITY USING HELIUM LEAK DETECTION TECHNIQUES

Edgar A. Doyle, Jr.

This document has been approved for public release and sale; its distribution is unlimited.

DE-65-10

FOREWORD

This report covers work performed under RADC Discretionary Fund Project DE-65-10, entitled: "Reliability Evaluation Techniques for Integrated Circuits."

The author wishes to thank Mr. Gerald G. Sweet who prepared the integrated circuit package metallurgical cross sections and photographs, and Messrs. John F. Carroll, Jack S. Smith, and Vincent C. Kapfer for technical discussions related to the theoretical gas flow analysis presented in the report.

This report has been reviewed and is approved.

Edgar A. Doyle Jr.

Approved: EDGAR A. DOYLE, JR.
Reliability Physics Section
Reliability Branch

Approved: WILLIAM H. BETHKE
Chief, Engineering Division

FOR THE COMMANDER: IRVING J. GABELMAN
Chief, Advanced Studies Group

ABSTRACT

Current integrated circuit packaging techniques, a compilation of applicable package hermeticity testing techniques, and the required theoretical fluid flow background necessary to evaluate integrated circuit package integrity, are presented. The basic types of integrated circuit packages are described with the emphasis placed on defects in package construction and hermetic sealing techniques which can influence package integrity. A general description of standard hermeticity tests is given, and their inherent limitations, when used in determining integrated circuit package leak rates, are discussed. The helium leak detection system and test procedures for package leak rate measurements (dV/dt-std. cc/He/sec.) are described. A complete review and analysis of the classical steady state helium gas flow rate equations are given. The time dependence corrections to the classical flow laws, required when an enclosed volume (e.g. and IC flat pack) is imposed on the system are derived and applied to the helium leak detection technique. The analysis includes a detailed determination of equivalent hole diameters based on the measured package leak rate. The importance of obtaining a hermetically sealed package with reference to integrated circuit reliability is then discussed.

In the classical steady state gas flow analysis, the derivation of the free-molecular flow rate law is noteworthy. The specific approach taken in deriving this gas flow rate law allows a determination of the variation in the molecular flow rate magnitude at points within a cross-sectional plane of a cylindrical tube. This variation in molecular flow rate has been implied in the literature; however, the functional dependence of dN/dt on the radial distance from the tube axis has not previously been explicitly determined.

TABLE OF CONTENTS

Section	Title	Page
I	INTRODUCTION	1
II	INTEGRATED CIRCUIT PACKAGES	3
	1. Package Requirements	3
	2. Package Types	3
	3. Reliability Considerations	6
III	PACKAGE INTEGRITY TECHNIQUES FOR INTEGRATED CIRCUITS (HERMETICITY)	8
	1. Gross Leak Test	8
	a. Alconox-Water Solution Test	8
	b. Polyethylene-Glycol Test	9
	c. Technique for Increasing the Leak Detection Sensitivity of Gross Leak Tests (a) and (b)	9
	d. Air Pressure Bomb Test	9
	e. "Joy Bomb" Test	10
	2. Fine Leak Tests	10
	a. Radiflo Leak Test	10
	b. Helium Leak Test	10
IV	DESCRIPTION OF HELIUM LEAK DETECTION TECHNIQUE	12
	1. Helium Pressure Bomb	13
	2. Nitrogen Gas Wash	13
	3. Leak Rate Measurement Using the Veeco Helium Leak Detection System	13
V	GENERAL EQUATIONS DESCRIBING GAS FLOW THROUGH LONG CYLINDRICAL TUBES, APPLICABLE IN THE DETERMINATION OF INTEGRATED CIRCUIT PACKAGE LEAK RATES	17
VI	GAS FLOW RATE TIME DEPENDENCE CORRECTIONS	19
VII	HELIUM LEAK TEST ANALYSIS AND DETERMINATION OF EQUIVALENT HOLE DIAMETER BASED ON THE MEASURED PACKAGE LEAK RATE WITH HELIUM BOMB PRESSURE AND TIME SPECIFIED	30
	1. Physical Properties of the Flat Pack Integrated Circuit Package Required for the Theoretical Helium Leak Test Analysis	30

TABLE OF CONTENTS (Continued)

Section	Title	Page
	2. Analysis of the Steady State Viscous, Diffusional, and Free-Molecular Gas Flow Rates	30
	3. Analysis of the Time Dependent Viscous, Diffusional, and Free-Molecular Gas Flow Rates	37
	4. Determination of Equivalent Leak Hole Diameter	42
VIII	CONCLUSIONS AND RECOMMENDATIONS	45
	APPENDIX. Derivation of the Classical Equations Describing Fluid Flow through Long Cylindrical Tubes, Applicable in the Determination of Integrated Circuit Package Leak Rates	47
	1. Poiseuille's Laws of Viscous Fluid Flow for Liquids and Gases	47
	2. Diffusional Flow Laws of a Gas	54
	3. Free-Molecular Flow Laws of a Gas	57
	4. Summary of Equations Characterizing Fluid Flow Through a Cylindrical Tube Including Definition of Terms	64
	5. Analysis of the Classical Steady State Gas Flow Equations	65
	REFERENCES	68

LIST OF ILLUSTRATIONS

Figure	Title	Page
1	Integrated Circuit Packages: a. TO-type and Flat Package, b. Package Cross-Sectional Diagrams, c. Metallurgical Sections	5
2	Package Leak Rate Measurement Flow Diagram Illustrating: a. Helium Pressure Bomb, b. Nitrogen Flush, c. Veeco Helium Leak Detector Showing Mass Spectrometer, d. Readout Electronics	14
3	Veeco Mass Spectrometer Leak Detector and Helium Pressure Bomb Units used for Integrated Circuit Hermeticity Testing	15
4	Molecular Mean Free Path L of Helium and Air as a Function of Pressure	32
5	Steady State Helium Viscous Gas Flow Rates (dN/dt, dV/dt) as a Function of Helium Bomb Pressure and Tube Diameter	33
6	Steady State Helium Diffusional Gas Flow Rates (dN/dt, dV/dt) as a Function of Helium Bomb Pressure and Tube Diameter	34
7	Steady State Helium Free-Molecular Gas Flow Rates (dN/dt, dV/dt) as a Function of Internal IC Package Pressure and Tube Diameter	35
8	IC Package Internal Helium Partial Pressure Due to Viscous Flow as a Function of Helium Pressure Bomb Time for Several Hole Diameters	40
A-1	Force Diagram for Fluid Flow Through a Cylindrical Tube Due to a Pressure Differential	48
A-2	Diagram Illustrating the Frictional Force Resisting the Relative Motion of Two Adjacent Layers of a Viscous Fluid	49
A-3	Diagram Used in Deriving the Diffusional Gas Flow Law Through a Cylindrical Tube Due to a Concentration Gradient	55
A-4	Diagram Used in Deriving the Free-Molecular Gas Flow Law Through a Cylindrical Tube Due to a Pressure Gradient	58
A-5	Graph of Flow Integral Versus $\varkappa$	62

SECTION I

INTRODUCTION

Extensive research in the field of semiconductor surfaces by both the semiconductor industry and Government-sponsored programs [1,2,3,4,5,6,7,8,9] has resulted in the realization that surface effects determine, to a large extent, the electrical characteristics of p-n junctions. Current silicon junction devices and integrated circuits are fabricated almost exclusively using planar technology, i.e., oxide passivated diffused junction structures, resulting in a significant improvement in device reliability. In addition, these transistor structures, fabricated using the epitaxial-planar process, exhibit extremely low-junction leakage currents, have improved noise figure, d-c characteristics, voltage and power dissipation ratings, low-current and high-frequency gain characteristics, and switching speed when compared with earlier transistor structures.

Although a significant improvement in device performance has been achieved utilizing the planar technology, it has been shown that degradation of p-n junction reverse current-voltage characteristics and transistor grounded-emitter current gain (β) characteristics can result from inversion layer formation, where the typical failure modes observed are an increase ($I_R > I_{R\ max}$ specification) in reverse leakage current, and a reduction in β ($\beta < \beta_{min}$ specification), respectively. Various mechanisms have been identified [10] which cause semiconductor surface inversion layers including: (1) a fixed positive surface state charge at the oxide-silicon interface of an uncontaminated thermal oxide; (2) alkali ion contamination within the silicon dioxide which can migrate and redistribute at elevated temperatures; (3) a positive space-charge within the oxide due to exposure to ionizing radiation; (4) ionic charge on the surface of the oxide i.e. ionic contamination in a package where there exists a given level in parts per million (ppm) of moisture content which increases the mobility of the contaminant in the presence of an electric field; and (5) a strong electric field produced by a voltage applied to a metal field plate on the oxide surface over the silicon.

Field-induced junctions, (FIJ), and surface charge migration on the oxide surface using gated diode structures have been investigated by Fairchild Semiconductor, in work sponsored by the Rome Air Development Center under contract AF 30(602)-3776. [9] They have demonstrated the conditions required to induce surface depletion and inversion (field-induced junction) and the relationship between the rate of depletion or inversion layer growth due to ion migration and the sheet resistivity of the oxide surface. Further, Grove and Fitzgerald, [10] using a gated diode structure, have demonstrated the conditions required to generate large channel currents.

The discrete elements (that is, resistors, capacitors, diodes, and transistors) comprising a monolithic integrated circuit are interconnected using a metallization pattern consisting of conducting lands or strips of aluminum or molybdenum-gold deposited on the oxide surface. The connections to discrete elements are made by metallic deposition through etched oxide windows and subsequent alloying. The metallic lands of the interconnect pattern on the oxide surface cross directly over junctions and discontinuities in the oxide thickness. Thus, the possible formation of field-induced junctions (surface inversion or depletion) in integrated circuits is readily apparent with an applied potential to the metallic lands. In addition, since the oxide sheet resistivity, which governs the rate of inversion layer growth away from the land, is a function of the moisture content and contamination within the package, the importance of minimizing moisture content is evident. The presence of several parts per million water content will reduce the oxide sheet resistivity, thereby increasing the rate of inversion layer growth.

Results of the Minuteman II Reliability Program, where all integrated circuit devices were subjected to hermeticity tests with a specified maximum allowable leak rate of $5X10^{-7}$ std. cc./sec., have shown that surface-inversion type failures contributed significantly to the over-all device failure rate, and that a 100 per cent power burn-in screen was both necessary and effective in reducing integrated circuit surface inversion failures. Results of the Component Quality Assurance Program (CQAP) under the Minuteman II Program, where reliability tests were designed to accelerate specific failure mechanisms and generate device failures, have shown that surface inversion is one of the dominant failure mechanisms observed in integrated circuit devices.

Semiconductor surface-inversion is observed in integrated circuits during reliability stress testing even after passing hermeticity tests. These tests indicate the presence of ionic contamination and moisture content within the package after final seal or bulk oxide contamination. Since the rate of inversion layer formation due to surface ion migration is a function of the oxide sheet resistivity which, in turn, is a function of the contamination and relative humidity within the package, it points out the requirement for a hermetically-sealed integrated circuit package. It also indicates that the ultimate device reliability is related to the degree of package hermeticity. This fact, in itself, justifies extensive IC package hermeticity screen tests for insuring high-reliability devices.

The following sections describe the standard integrated circuit packages and hermeticity test techniques used for package leak detection and determination of leak rate magnitude. The classical fluid flow equations and derivations are included in the Appendix. The time-dependent flow equations developed in Section VI are used to determine the sensitivity of the helium system over a range of package leak rates. A method for equivalent leak hole diameter determination based on a measured package leak rate is reviewed.

The integrated approach taken here results in a comprehensive examination of hermeticity testing techniques used for evaluating IC package integrity.

SECTION II

INTEGRATED CIRCUIT PACKAGES

1. PACKAGE REQUIREMENTS

In general, integrated circuit packages are designed to meet a number of specific requirements, based on anticipated environmental conditions, with the most common requirements listed below:

a. The package must provide a mechanically stable device enclosure so reliability screen tests such as vibration, drop shock, centrifuge, and thermal shock, which are intended to simulate operating conditions, do not affect the operational characteristics of the device.

b. The package must provide electrical feedthroughs from the internal device itself to the package externals which are electrically insulated from the package for supplying power to the circuit.

c. The package must provide for heat transfer away from the device, within the package, since device parameters change significantly with temperature.

d. The package must be corrosion-resistant to external environments.

e. The package must be hermetic to prevent exposure of the internal device to high relative humidity ambients, etc., since the electrical parameters of the discrete elements comprising the integrated circuit can change value or degrade when exposed to this type of environment.

f. The package must provide a light shield since semiconductor junction device parameters are light-sensitive.

g. The package must isolate the internal device from external radiation and, also, in specific instances, act as a shield to prevent the internal circuit from radiating to and adversely affecting the operation of other external circuitry.

2. PACKAGE TYPES

The hermetic packages most commonly used for integrated circuits, which are designed to meet the requirements previously discussed, are the TO-type packages, and flat packages.

The TO-type package is made entirely of metal (i.e., gold-plated Kovar), where the leads are insulated from the metal package with glass, forming glass-to-metal seals. The Kovar header eyelet can be either a solid or recessed base type. The silicon die attach is accomplished using the gold-silicon eutectic formed by alloying, at an elevated temperature, the silicon die with the gold in the header. Interconnection of the integrated circuit die and the package leads is performed using various bonding techniques. The most common techniques are thermocompression bonding, ultrasonic bonding, and parallel-gap welding. Final sealing is accomplished by welding the can to the header.

The flat package construction varies from manufacturer to manufacturer. Generally, the leads and all metal parts of the package are gold-plated by the manufacturer. The package base and lid material may be metal (e.g., Kovar), ceramic (e.g., alumina (Al_2O_3) and beryllia (BeO)), or glass (glass composition varies between manufacturers). The package wall material may also be metal, ceramic, or glass where the base and wall can either be a single unit or separate units. The leads are insulated from the package with glass employing glass-to-metal sealing techniques. The silicon die attach to the package base is made, using either a eutectic or glass seal, depending on the base material, i.e., a eutectic preform is used for metal base packages and a glass preform for ceramic and glass base packages. The interconnection of the silicon die to the package leads is accomplished, using the bonding techniques previously mentioned. Final sealing is accomplished using either a eutectic (e.g., gold-silicon, gold-germanium, or gold-tin) or low temperature glass preform (e.g., polyceram), which is positioned between the lid and wall. It is subsequently heated until the eutectic, or glass, flows and wets the surfaces to be joined, forming the hermetic seal.

Figure 1 shows the completed TO-type and flat package assembly. Package cross sections with component parts, materials used, and hermetic seals are indicated. Metallurgical sections of typical hermetically-sealed packages with package components, materials, and seals are also shown. The flat package construction of the integrated circuit test vehicle, used under project DE-65-10, is similar to the flat package construction shown in Figure 1. The major differences are: (1) a metal base is used and (2) the gold-plated Kovar leads inside the package are a formed cantilever such that the lead welding pad at the end of the cantilever is elevated above the lead frame and the silicon die surface.

A more complete description of package construction, including the various metal, eutectic, ceramic, and glass materials used, and hermetic sealing techniques, is given in RADC-TR-65-61, July 1965, "Microelectronic Packaging Concepts."[11]

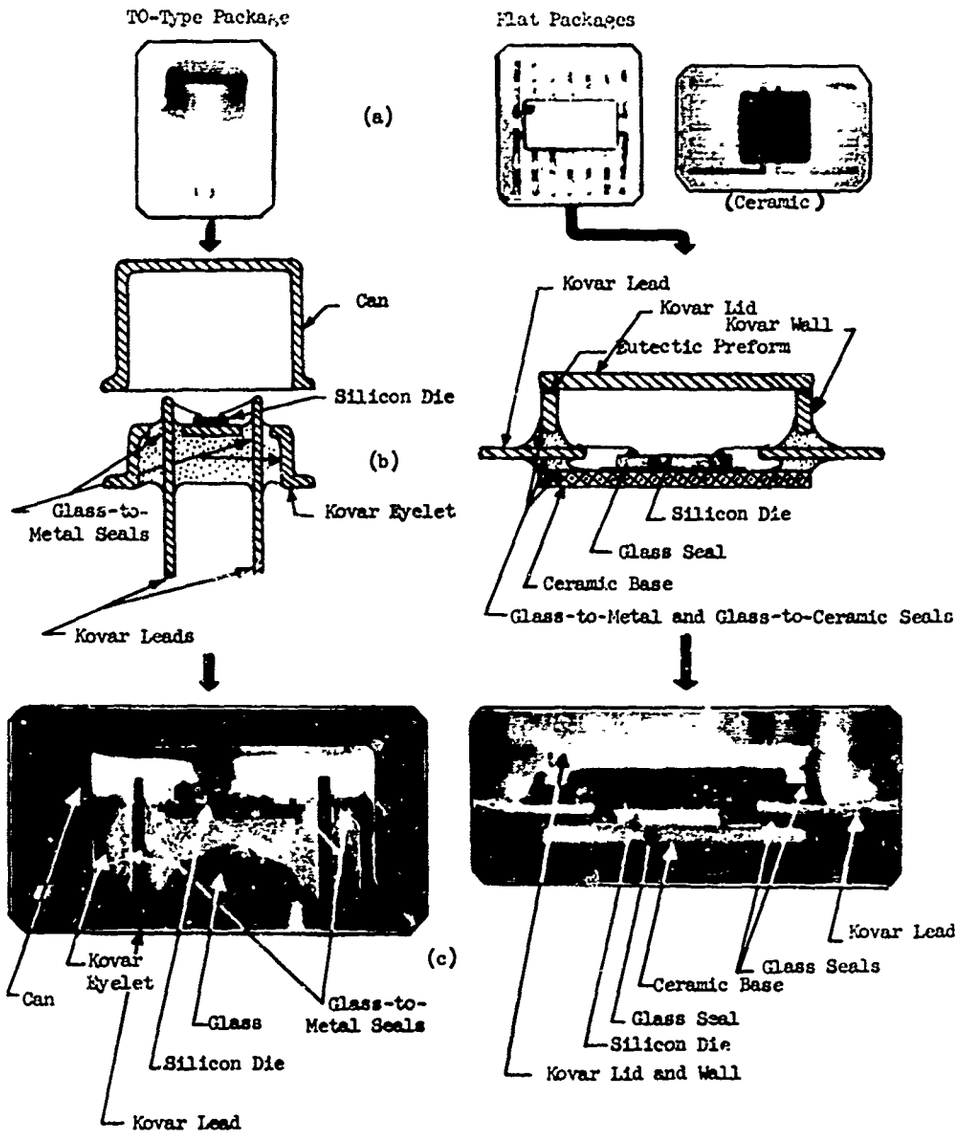

Figure 1. Integrated Circuit Packages: a. TO-type and Flat Package
b. Package Cross-Sectional Diagrams c. Metallurgical Sections

The package manufacturer visually inspects the package parts for mechanical defects, performs electrical insulation tests, and checks the hermetic seals, using either the helium or the Radiflo leak test. Thus, the hermeticity tests performed on the package after final seal is made will generally indicate the quality of the lid-to-package-wall seal. However, the possible damage to the manufacturers' package hermetic seals, due to improper handling, silicon die attach, lead bonding, and final seal operations cannot be overlooked.

3. RELIABILITY CONSIDERATIONS

In general, as previously pointed out, integrated circuit reliability, from the packaging standpoint, is dependent upon the degree of package hermeticity. The critical manufacturing process common to the described packages, which determines the ultimate degree of hermeticity, is the formation of hermetic glass-to-metal or glass-to-ceramic seals. The quality of the final seal of the package also determines the degree of package hermeticity. Generally this process is well-controlled, and does not involve the more critical process of hermetically-sealing a large number of leads while maintaining electrical lead insulation between the various parts of the package. The factors affecting both the quality of the initial seals and the degradation of the seals, when exposed to various environmental conditions such as high temperatures, vibration, thermal shock, etc., are listed below and include:

a. Differences in the thermal coefficient of expansion between the metal and glass or ceramic and glass. A slight mismatch in the thermal coefficient of expansion between the metal and glass is sufficient to cause a separation of metal and glass at some temperature. To prevent separation of metal and glass, an oxide is grown on the metal surfaces. The fusing then results in a continuous transition from metal, to metal oxides, to metal oxides in glass, to glass. The commonly used ceramics are metal oxides, and the transition is from ceramic, to ceramic in glass, to glass.

b. The uniformity of grown metal oxide buffers required to prevent the separation of metal and glass due to slight differences in the thermal coefficient of expansion. In the case of glass-to-metal seals, if thin spots in the grown oxide are present, upon fusing, it is possible for the oxide layer to be completely dissolved in the glass, thus eliminating the oxide buffer resulting in a leaky seal.

c. Material cleanliness (removal of oxides, oil, or particle contamination) during processing, in particular, of the metal surfaces prior to oxide growth. The cleanliness of the metal surface prior to oxidation and the control of the oxidation process will determine the oxide thickness uniformity required for a high quality hermetic seal. In general, any contamination on the surfaces of the material during sealing processes will produce a nonuniform seal between the two surfaces.

d. The quantity or volume of glass surrounding the leads and metal or ceramic surfaces. Further, a greater volume of glass surrounding the leads and in contact with other metal or ceramic surfaces will insure a more reliable seal.

Another major problem area in the hermetic sealing process is void formation which can be caused by the outgassing of gas pockets within the materials at elevated temperatures (fusing temperature). The outgassing of package materials during reliability stress testing at elevated temperatures is a possible source of contamination which could be detrimental or degrading to device operational characteristics.

Flexing the gold-plated Kovar leads could fracture the glass-to-metal seal, resulting in a leaky seal at that point. It is conceivable that reliability accelerated testing at elevated temperatures could degrade package hermeticity by destroying the hermetic seals at weak points in the package.

The preceding discussion delineated the requirements necessary for fabricating a hermetic integrated circuit package and some conditions under which the package hermetic seals could be destroyed. The following section will describe the various techniques used in determining the degree of hermeticity of a packaged circuit, i. e. after the silicon die attach and final sealing processes have been performed.

SECTION III

PACKAGE INTEGRITY TECHNIQUES FOR INTEGRATED CIRCUITS (HERMETICITY)

Hermeticity testing of integrated circuits can be broken down into the three main categories as listed below:

- Class A Leaks - Leak Rate $< 10^{-9}$ cc/sec.
- Class B Leaks - Leak Rates from 10^{-5} cc/sec. to 10^{-9} cc/sec.
- Class C Leaks - Leak Rate $> 10^{-5}$ cc/sec.

In general, an integrated circuit package is considered hermetic if it has a leak rate less than 5×10^{-7} std. cc/sec. The hermeticity tests used for determining IC package leak rates fall in two major classes as listed below:

- Gross Leak Tests - Leak Rates $> 10^{-5}$ cc/sec.
- Fine Leak Tests - Leak Rates $< 10^{-5}$ cc/sec.

There are various measurement techniques used in the semiconductor industry for measuring leak rates in different types of IC packages in the above two classes. These are described in the following subsections.

1. GROSS LEAK TESTS

a. Alconox-Water Solution Test

This test is conducted by immersing the package in a 90°C alconox (wetting agent) water solution for 15 seconds, observing it with a low power microscope for continued bubble formation from any point on the external package. The principle of this test is that the expansion of the gas, resulting in a pressure increase within the package due to the elevated temperature, will force part of the gas out of the package through a defective seal. A continuous stream of bubbles indicates a gross leak in the package. This test is inexpensive and requires a minimum of equipment and time. However, the solution can enter the package through a seal defect and damage the device.

b. Polyethylene-Glycol Test

This test is performed by placing the unit in hot polyethylene-glycol at 150°C and, again, observing with a low-power microscope for continued bubble formation. The test principle is identical with the alconox-water test, and a steady stream of bubbles from any point on the package is interpreted as a gross leak. Again, this test is inexpensive and requires little equipment and time. However, damage to the unit can result from the inflow of the liquid into the package.

c. Technique for Increasing the Gross Leak Detection Sensitivity of Gross Leak Tests (a) and (b)

The method used for increasing the leak detection sensitivity of the alconox-water solution test at 90°C and the polyethylene-glycol test at 150°C consists of submerging the package into either of the test solutions for several minutes. During this procedure the existing pressure differential forces part of the package internal gas out of the package. The partial outflow of gas thus creates a partial vacuum within the package if the package and internal gas are instantaneously returned to ambient temperature and atmospheric pressure exists outside the package. This condition can be simulated by removing the package from the test solution and immediately submerging it into methyl alcohol at 25°C and atmospheric pressure for several minutes. If a gross leak exists, alcohol will be forced into the package due to the pressure differential, i.e., ΔP = atmospheric pressure-internal package pressure, until pressure equilibrium is reached at the ambient temperature of 25°C. The package will then contain air at atmospheric pressure and liquid alcohol. The package is then removed from the alcohol bath and resubmerged into the alconox-water solution or polyethylene-glycol. The temperature of either test solution exceeds the boiling point of the methyl alcohol (64.5°C) within the package causing vaporization. The vaporization of the liquid alcohol in the package at the elevated temperature results in a higher pressure differential than that existing when the package initially contains gas at one atmosphere pressure. In addition, the liquid alcohol will continue to vaporize at a definite rate such that the pressure differential will exist for a longer time duration. The increased pressure differential existing over a longer time interval thus increases the detection sensitivity of Gross Leak Tests (a) and (b). Using this technique, again a continuous stream of bubbles emanating from the package is interpreted as a gross leak.

d. Air Pressure Bomb Test

This method of gross leak detection uses alcohol at room temperature. The unit under test is placed in a high-pressure (45 pounds per square inch) air atmosphere for four hours. It is then returned to ambient pressure, immersed in alcohol, and observed with a low-power microscope. The basic test principle is the inflow and outflow of air due to a pressure differential. Again, a steady stream of small bubbles is interpreted as a gross leak. Alcohol is chosen as the immersion medium because it is a solvent for any organic material which may clog seal leaks. Also, the alcohol

will not cause device damage. This technique has overcome the major disadvantages associated with the polyethylene-glycol and alconox-water solution test, but requires more time and equipment.

e. "Joy Bomb" Test

This test detects the presence of an ionized low viscosity solution which is forced into a leaky package under pressure. The typical test consists of a one-hour subjection of devices to 100 psig using a solution of water and "Joy", or various other detergents. Following this test, units are tested on an oscilloscope or transistor curve tracer for mobile hysteresis or reverse leakage current. A significant increase in the reverse leakage after Joy Bomb indicates a gross leak. This test requires time and equipment and, since the solution enters the package, damage to the device usually occurs.

2. FINE LEAK TESTS

a. Radiflo Leak Test

The Radiflo unit is an instrument used for measuring leak rates of enclosed volumes between 1×10^{-5} std.cc/sec. and 1×10^{-11} std. cc/sec. The system uses a radioactive gas (Krypton 85) as a tracer. The test consists of subjecting a sealed IC package to a mixture of a carrier and radioactive Krypton gas under pressure (nominally 100-200 psig) for a specified time. The maximum pressure the package can withstand must be determined so that as high a bomb pressure as possible can be used to minimize the bombing time. The IC packages are placed in the bombing chamber which is then evacuated and subsequently backfilled with the carrier gas and radioactive Krypton gas mixture to a specified pressure for a specified time. The radioactive and carrier gas mixture is then removed from the chamber by a series of "clean" gas purges, or washes, which also remove any adsorbed gas on the surfaces of the package. Each packaged device is then placed into the well of a scintillation counter, and a calibrated reading in terms of std. cc/sec. is obtained from the amount of radioactive gas within the package. The major advantage of the Radiflo leak test is that large quantities of devices can be bombed simultaneously, and individual device leak rate measurements can be performed in a minimum of time as compared with the helium leak test system. The disadvantage of Radiflo is its inability in detecting leak rates greater than 10^{-5} std. cc/sec. If the hole in the seal is large, allowing gross leakage ($\frac{dV}{dt} > 1 \times 10^{-5}$ std. cc/sec.), the radioactive gas can leave the package through the same defective seal and escape detection.

b. Helium Leak Test

Hermeticity testing of integrated circuit packages, conducted at RADC under project DE-65-10, uses the Veeco helium leak test system with helium gas as the tracer fluid. The system is capable of measuring package leak rates in the 1×10^{-5}

to 1×10^{-10} std. cc/sec. range. The test consists of placing a sealed integrated circuit package in a pressure chamber, which is subsequently purged with pure helium gas to eliminate the chamber air content, and then pressurized to a specific helium bomb pressure. The package is bombed at this pressure for a given length of time (nominally two to five hours at 45-60 psig), removed from the chamber where the external package surface is flushed with dry nitrogen gas to remove adsorbed helium gas, and then placed in a bell jar which is then evacuated. This allows the detection of part of the helium gas flowing out of the package by a mass spectrometer tuned for helium. The test variables, (1) helium bomb pressure and time duration, (2) information such as Veeco helium leak detector calibration, (3) time of measurement for leak rate determination, (4) characteristic curves of detected leak rate versus time during leak test under vacuum conditions, and (5) the limits of system detectability (minimum and maximum detectable leak rates), must be determined to evaluate integrated circuit package integrity using the helium leak detection system. This method of leak detection and the determination of test variables are presented in detail in the following sections.

SECTION IV

DESCRIPTION OF HELIUM LEAK DETECTION TECHNIQUE

In general, the basic principle underlying all methods of leak detection of an enclosed volume, as evidenced from the hermeticity tests described in the previous section, involves the passage or transfer of a tracer fluid (a liquid or gas) external to the volume, through a leakage path. This leakage path or paths can assume various geometrical configurations, and its existence is verified by detection of the tracer fluid which penetrated the enclosed volume. The basic difference between the Radiflo and the helium leak test lies in the method used for detection of the tracer fluid which is forced into the enclosed volume or package. In the Radiflo technique, a radiation count of the package, after pressure bombing, is made by employing a scintillation counter. The counts per minute readout obtained is a direct measure of the quantity of radioactive gas (Krypton 85) within the package, which is a function of the package leak rate. The measured radiation count is converted to an equivalent volume leak rate and recorded in std. cc/sec. Thus, the Radiflo leak test technique requires only that the radioactive gas enter the enclosed volume for detection and leak rate measurement. In the helium technique, again, the tracer gas (helium) is forced into the package by a pressure bomb cycle. However, the mass spectrometer detection technique requires the outflow of the helium gas within the package into the mass spectrometer for detection and leak rate measurement. Thus, the helium technique requires both the inflow and subsequent outflow of the tracer gas for package leak rate determination.

The following description of the helium leak test technique will emphasize the order of the test sequence, the equipment used during each test step, and, where applicable, the type of fluid flow the gas undergoes during specific test procedures. This can then be compared with the gas flow characteristics during the Radiflo test sequence.

Some of the basic considerations in the selection of helium for use as the tracer gas in the mass spectrometer type leak detection technique should be mentioned here:

- the rate of diffusion of helium gas through a leak, due to its small mass, is greater than that of any other gas, with the exception of hydrogen.
- the molecular diameter of helium is small,
- helium occurs in the atmosphere to the extent of only one part in 200,000 parts of air,

- helium is an inert gas and, as such, will not chemically react with the package or device materials,

- it is improbable that an ion due to any other gas will give an indication that can be mistaken for helium using mass spectrographic detection techniques.

Figures 2 and 3 show the Veeco leak detector equipment used, and the helium leak test flow diagram, respectively. Reference to these figures will be made, where appropriate, in the following test description.

1. HELIUM PRESSURE BOMB

Helium gas is forced (viscous or diffusional gas flow due to pressure differential) into the integrated circuit package by placing the package in a pressure chamber which is shown in Figures 2 and 3. The chamber is then purged with helium gas to eliminate the chamber air content, after which the bleeder valve is closed and the chamber pressure set to a specific value. It will be stated here (the applicable classical gas flow equations are derived in the Appendix) that the inflow of helium gas due to the pressure differential follows either Poiseuille's law of viscous gas flow or diffusional flow. The mean free path, L, of the helium gas molecules at the nominal bomb pressures is small, and assumed to be much less than the diameter of the hole, constituting a defective point, or leakage path, in the package. The package is then subjected to the pressure bomb for a specified time. The bomb pressure and time will determine the final partial pressure of helium within the package, depending on the leak rate.

It should be noted here that Poiseuille's viscous gas flow law or the diffusional flow law also applies during the Radiflo pressure bomb.

2. NITROGEN GAS WASH

After completion of the helium pressure bomb, the package is removed from the chamber and flushed with nitrogen gas to reduce the quantity of adsorbed helium gas on the external surfaces of the package.

3. LEAK RATE MEASUREMENT USING THE VEECO HELIUM LEAK DETECTION SYSTEM

The leak detector indicator is initially calibrated before testing, using a diffusion-type standard leak (Veeco Sensitivity Calibrator Type SC-4, $dV/dt = 7.0 \times 10^{-8} \pm 10\%$ std. cc/sec). After completion of the helium pressure bomb and nitrogen gas flush steps of the test sequence, the package is transferred from the pressure chamber to the bell jar, shown in Figures 2 and 3, which is connected to the test manifold of the Veeco leak detector. During the transfer, part of the helium gas penetrating the package will flow out of the package (viscous or diffusional flow). The bell jar is then evacuated increasing the pressure differential between the internal

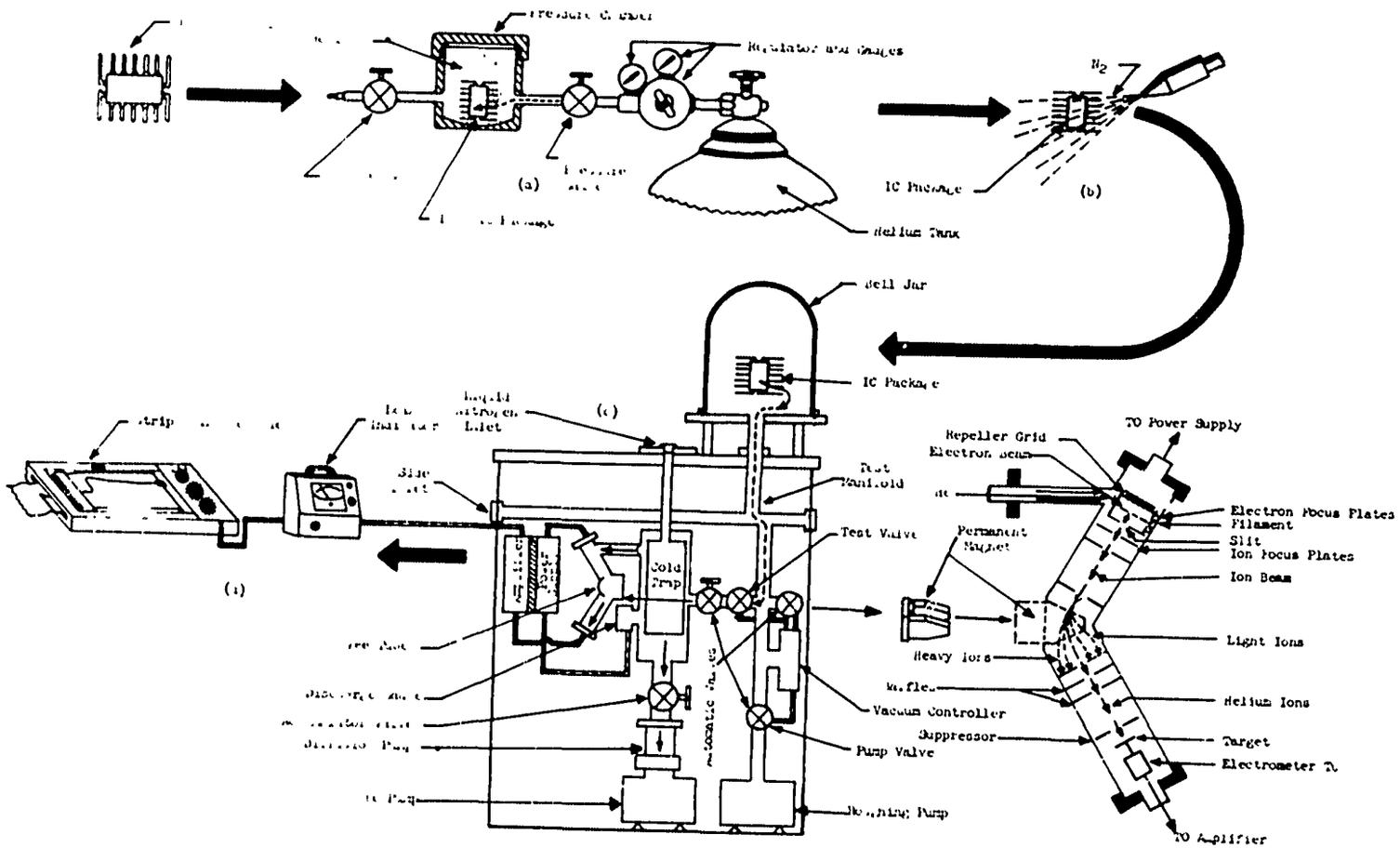

Figure 2. Package Leak Rate Measurement Flow Diagram Illustrating: a. Helium Pressure Bomb, b. Nitrogen Flush, c. Veeco Helium Leak Detector Showing Mass Spectrometer, d. Readout Electronics

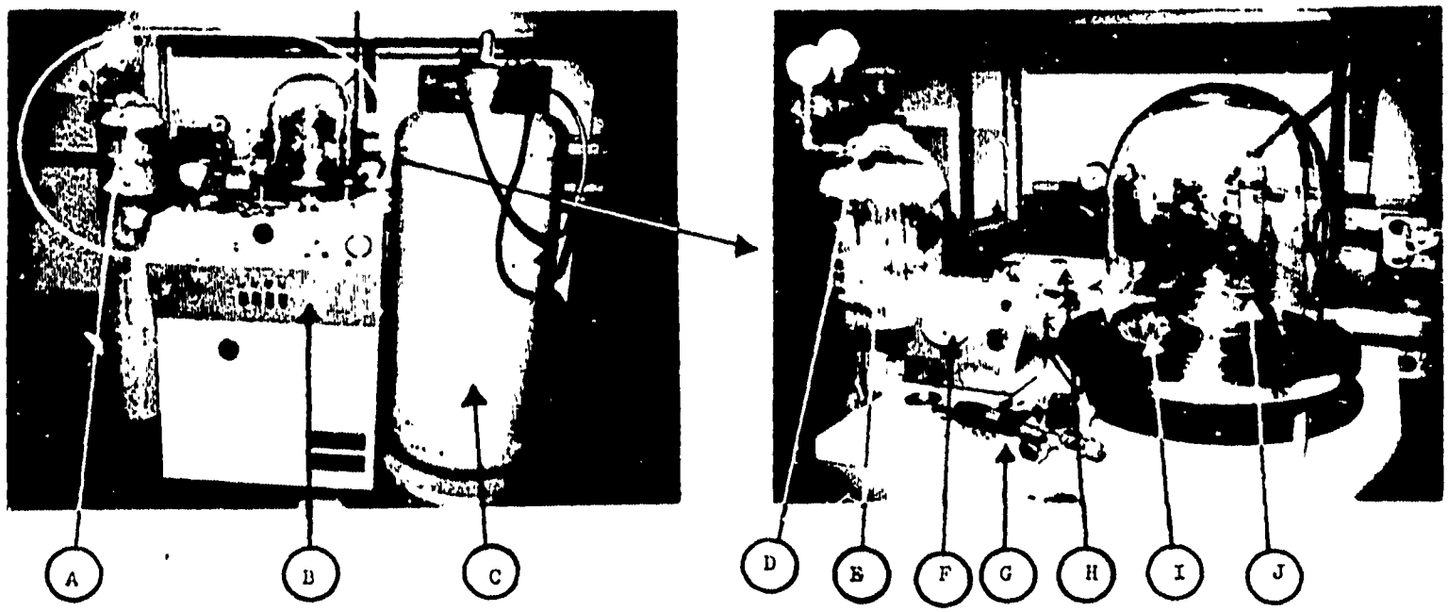

A. Helium Pressure Bomb Unit

B. Veeco Mass Spectrometer Leak Detector Unit (MS-9AB)

C. Liquid Nitrogen for Cold Trap

D. Helium Pressure Chamber

E. Helium Tank and Regulator (0-200 psig)

F. Leak Indicator

G. Sensitivity Calibrator (SC-4)

H. B&L Model VOM-6 Strip Chart Recorder

I. Wire Screen Containing Device Under Test

J. Bell Jar

Figure 3. Veeco Mass Spectrometer Leak Detector and Helium Pressure Bomb Units used for Integrated Circuit Hermeticity Testing

and external of the package, the magnitude of which is determined by the gas pressure inside, and the vacuum pressure outside the package. The flow of helium gas through the leak path in this case can follow the laws of viscous, diffusional, or free-molecular flow depending on the pressure (refer to Section VII-1). The mean free path, L, of the helium gas molecules increases with decreasing pressure, and at relatively low pressures ($P < 10^4$ dynes/cm^2) and high vacuum pressures (10^{-5} to 10^{-6} Torr range), the magnitude of L of the gas molecules will exceed the leak or hole diameter such that collisions with the surfaces or walls of the leak path or hole, rather than intermolecular collisions, will predominate and determine the molecular flow rate (free-molecular flow).

The helium gas molecules flowing out of the package into the bell jar pass down the test manifold, through the test valve, and into the cold trap region (Figure 3). Approximately 99 per cent of the helium gas content in the cold trap is exhausted by the diffusion pump and fore-pump system, the remainder of the gas passing through the Vee-tube port directly into the Vee-tube for detection. The Vee-tube is essentially a mass spectrometer peaked for helium detection (Figure 3). The remaining vacuum and electronic equipment in the system are required for maintaining the proper atmospheric conditions for optimum mass spectrometer operation and electrical readout, respectively.

The helium and other gas molecules entering the Vee-tube become positively charged ions by bombardment with electrons emitted from a tungsten filament. A positive potential repeller grid repels the ions through the slit forming an ion beam. The beam is accelerated by an electric field and passes through the ion focus plates. The ion beam then enters a transverse magnetic field (permanent magnet) which deflects the path of the ions, where the degree of deflection is determined by the mass of the ion, the entry velocity, and the magnetic field strength. The path of the lighter ions present, such as hydrogen, undergoes a large deflection while that of the heavier ions, such as nitrogen and oxygen, undergo only a slight deflection. A baffle plate with a slit opening is positioned in the tube and adjusted such that the path of the helium ions down the tube after deflection coincides with the center of the slit opening. All other ions present hit the baffle plates and thus do not reach the collector. The helium ions, however, reach the collector and are detected. The signal produced by the ion current is then amplified and fed to the leak indicator meter for electrical readout and leak rate determination. The output of the leak indicator meter is then fed into a strip chart recorder which provides a permanent record of the package leak rate as a function of time and improves the readout accuracy of the system.

The gas flow laws and equations referred to in the preceding helium leak test description are derived in the Appendix and summarized in the following section.

SECTION V

GENERAL EQUATIONS DESCRIBING GAS FLOW THROUGH LONG CYLINDRICAL TUBES, APPLICABLE IN THE DETERMINATION OF INTEGRATED CIRCUIT PACKAGE LEAK RATES

The viscous, diffusional, and free-molecular steady state gas flow rate laws, though derived previously by others and referenced where appropriate in the Appendix, are included in this report for the sake of unity and completeness, and to furnish the reader a complete theoretical background of the laws describing gas flow through cylindrical tubes. This approach results in a sound, physical understanding of the analysis of the helium package leak test system presented in Sections VI and VII. For the complete derivations of the fluid flow laws through long cylindrical tubes, the reader is referred to the Appendix.

The gas flow equations describing the steady state volume and molecular flow rates in terms of test parameters and package properties applicable to the helium leak detector system are summarized in this section.

Viscous Gas Flow Rate Equations:

$$\frac{dV}{dt} = \frac{\pi D^4 (P_1^{\,2} - P_2^{\,2})}{256 \eta \ell P_o} \qquad D >> L \qquad (1)$$

$$\frac{dN}{dt} = \frac{\pi D^4 (P_1^{\,2} - P_2^{\,2})}{256 \eta k T \ell} \qquad D >> L \qquad (2)$$

Diffusional Gas Flow Rate Equations:

$$\frac{dV}{dt} = \frac{\pi D^2 L v_a (P_1 - P_2)}{12 \ell P_o} \qquad D > L \qquad (3)$$

$$\frac{dN}{dt} = \frac{\pi D^2 L v_a (n_1 - n_2)}{12 \ell} \qquad D > L \qquad (4)$$

Free-Molecular Gas Flow Rate Equations:

$$\frac{dV}{dt} = \frac{\pi D^3 v_a (P_1 - P_2)}{12 \ell P_o} \qquad D < L \qquad (5)$$

$$\frac{dN}{dt} = \frac{\pi D^3 v_a (n_1 - n_2)}{12 \ell} \qquad D < L \qquad (6)$$

SECTION VI

GAS FLOW RATE TIME DEPENDENCE CORRECTIONS

In this section the most applicable steady state gas flow equations will be expanded to include the time dependence corrections required when an enclosed volume (e.g., IC flat package) is imposed on the system. This will then, constitute the basic equations used for evaluating the sensitivity of the helium leak test system to various package leak rates.

The previously summarized equations are valid for steady state gas flow through a circular tube where the initial conditions at the inlet and outlet of the tube are independent of time. When the gas molecules flowing through the tube are confined to a fixed volume or container at one end of the tube, the gas inflow or outflow rate, in the case of viscous or diffusional flow (pressure differential), will decrease with time due to the decrease in the pressure differential with time. Further, considering the free-molecular outflow case (concentration or pressure differential), the molecular flow rate will again decrease with time since the number of molecules within the enclosed volume decreases with time, thus reducing the pressure differential.

It is apparent that during the pressure bomb test procedure where the viscous or diffusional gas inflow laws apply, the inlet conditions are constant (helium bomb pressure) and the outlet conditions, namely the pressure within the enclosed volume, vary resulting in a change in the gas flow rate with time. Using the same argument, it is evident that during the package transfer from the pressure chamber to the bell jar, the gas outflow rate decreases with time. Similarly, during the leak rate measurement test procedure where the outlet is under a constant high vacuum condition and the free-molecular outflow laws apply, the inlet conditions, namely the gas molecular density and corresponding pressures within the enclosed volume, vary, which again results in a change in the gas flow rate with time. The gas flow equations applicable to the helium package leak rate measurement system must be further developed using the appropriate boundary conditions to include all time dependent terms such that the gas flow rate can be determined as a function of time.

In the steady state gas flow rate equations summarized in Section V, the pressure and concentration gradient, dP/dl and dn/dl, is negative by convention and, therefore, the subscripts 1 and 2 of both the P and n terms refer to the higher and lower pressure or molecular density respectively.

Throughout Section VI, P_2 and n_2 designate the pressure and molecular density within the IC package. In deriving the viscous and diffusional time dependent inflow equations (Helium Pressure Bomb) the subscript notation is consistent with that of Section V and the Appendix. Note that the viscous and free-molecular time corrected outflow equations are derived using equations (2) and (6) of Section V respectively. The basic equations marked by an asterisk, while of the same form as equations (2) and (6) in Section V, do not indicate a sign change but rather, a reversal in the P and n subscript notation. This reversal allows consistent internal package parameter designation while maintaining the correct pressure and concentration gradient sign convention.

Consider the helium bomb test procedure where the time dependence of the molecular $\frac{dN}{dt}$ and volume $\frac{dV}{dt}$ leak rate and the internal package pressure, P_2, must be determined. The molecular flow rate (eq. 2, Section V) and the internal package pressure can be expressed by:

$$\frac{dN}{dt} = \frac{\pi D^4 (P_1^2 - P_2^2)}{256\, \eta k T \ell} \qquad P_2 = \frac{nN^\circ kT}{V_c} = \frac{NkT}{V_c}$$

where:

D = tube diameter

P_1 = Helium Bomb pressure

P_2 = Internal IC package pressure

η = viscosity of tracer gas (helium)

k = Boltzmann's constant

T = Absolute temperature

ℓ = tube length

V_c = IC package volume

Now:

$$\frac{dP_2}{dt} = \frac{dN/dt\, kT}{V_c} = \frac{\pi D^4 (P_1^2 - P_2^2)}{256\, \eta \ell Vc} = A(P_1^2 - P_2^2)$$

where

$$A = \frac{\pi D^4}{256\, \eta \ell Vc}$$

The resulting differential equation is of the first order with variables separable. Separating variables and integrating gives:

$$\int_a^b \frac{dP_2}{(P_1^2 - P_2^2)} = A \int_o^c dt$$

where P_2^o = initial internal package pressure

Integration and evaluation of the definite integrals where $a = P_2^o$ at $t = 0$ and $b \Rightarrow P_2^f$ as $c \Rightarrow t_f$ gives:

$$\left[\ln \frac{(P_1 + P_2)}{(P_1 - P_2)} \right]_{P_2^o}^{P_2^f} = 2AP_1t_f$$

Thus:

$$\left[\frac{(P_1 + P_2^f)(P_1 - P_2^o)}{(P_1 - P_2^f)(P_1 + P_2^o)} \right] = e^{2AP_1t_f}$$

Setting $P_2^o = KP_1$, some fraction of the bomb pressure where $1 > K > 0$, and simplifying the final expression for the internal package pressure as a function of bomb time and pressure becomes:

$$P_2^f = P_1 \left[\frac{\frac{(1 + K)}{(1 - K)} e^{2AP_1t_f} - 1}{\frac{(1 + K)}{(1 - K)} e^{2AP_1t_f} + 1} \right] \tag{7}$$

Substituting the previous equation for P_2 into the gas flow rate equation, the molecular flow rate as a function of bomb pressure and time is:

$$\frac{dN}{dt} = \frac{\pi D^4 P_1^{\,2}}{256\,\eta k T \ell} \left[1 - \left(\frac{\frac{(1+K)}{(1-K)} e^{2AP_1 t_f} - 1}{\frac{(1+K)}{(1-K)} e^{2AP_1 t_f} + 1} \right)^2 \right] \tag{7a}$$

Referring to equation (1), if the volume flow rate is measured at the package pressure P_2, then setting $P_o = P_2$ gives the volume gas flow rate at the entrance to the internal package volume.

$$\frac{dV}{dt} = \frac{\pi D^4 P_1^{\,2}}{256\,\eta \ell} \frac{\left[1 - \frac{\frac{(1+K)}{(1-K)} e^{2AP_1 t_f} - 1}{\frac{(1+K)}{(1-K)} e^{2AP_1 t_f} + 1} \right]^2}{P_1 \left[\frac{\frac{(1+K)}{(1-K)} e^{2AP_1 t_f} - 1}{\frac{(1+K)}{(1-K)} e^{2AP_1 t_f} + 1} \right]} \tag{7b}$$

Similarly, the decrease in internal package pressure (loss of tracer gas) during the transfer from the pressure bomb chamber to the vacuum bell jar as a function of time can be derived again using eq. 2 of Section V as follows:

$$\frac{dN}{dt} = \frac{\pi D^4 (P_2^{\,2} - P_1^{\,2})^*}{256\,\eta k T \ell}$$

and

$$-\frac{dP_2}{dt} = dN/dt \frac{kT}{V_c}$$

Substitution of the expression for dN/dt into the equation for dP_2/dt, separation of variables and integration yields:

$$\int_a^b \frac{dP_2}{(P_2^{\,2} - P_1^{\,2})} = -A \int_o^c dt$$

where:

$$A = \frac{\pi D^4}{256\,\eta \ell V_c}$$

$P_2^{\,o}$ = initial internal package pressure after helium bomb

P_1 = constant one atmosphere ambient pressure

Setting $a = P_2^{\,o} = KP_1$, in this case $K \geq 1$, and integrating where $a = P_2^{\,o}$ at $t = o$ and $b \Longrightarrow P_2^{\,f}$ as $c \Longrightarrow t_f$ gives the following expression for P_2 as a function of time:

$$P_2^{\,f} = P_1 \left[\frac{1 + \frac{(K-1)}{(K+1)} e^{-2AP_1 t_f}}{1 - \frac{(K-1)}{(K+1)} e^{-2AP_1 t_f}} \right] \tag{7c}$$

The molecular and volume flow rate (outflow) as a function of time can be obtained by direct substitution of the previous expression for P_2 into the basic flow rate equation.

The viscous helium gas inflow during pressure bombing and outflow during the package transfer from the pressure chamber to the bell jar is expressed in a general form by the following equation where the internal package pressure, P_2, is expressed as a function of test parameters and package properties. At inflow, the high pressure tube end is P_1, (Helium bomb pressure) whereas at outflow conditions P_2 (internal package pressure) is the high pressure tube end resulting in gas outflow from the package and P_1 is atmospheric pressure.

$$P_2^{\,f} = P_1 \left[\frac{\mp 1 + \frac{(K \pm 1)}{(K \mp 1)} e^{\pm 2AP_1 t_f}}{1 \pm \frac{(K \pm 1)}{(K \mp 1)} e^{\pm 2AP_1 t_f}} \right] \tag{7d}$$

The upper and lower sign must be used for inflow and outflow conditions respectively. The value of K_{in} (inflow) and K_{out} (outflow) are:

$K_{in} = P_2^{\,o}/P_1$ = initial internal package pressure/helium bomb pressure.

$K_{out} = P_2^{\,o}/P_1$ = initial package pressure after helium bomb/one atmosphere ambient pressure.

It should be noted that in the outflow case, both helium and air, will flow out of the package with a molecular flow rate dN/dt proportional to their partial pressure within

the package since the viscosities of helium and air are approximately equal. In addition, the outflow equation can be considered valid when the package is placed in the bell jar and partially evacuated and the internal package pressure is high enough such that $D \gg L$ is satisfied along the majority of the tube length, (a necessary condition for viscous flow). However, the equations will fail when the internal package pressure decreases to such a magnitude that $D < L$, the condition where free-molecular flow exists.

When diffusional gas inflow to the package during the helium bomb test procedure is greater in magnitude than that predicted under viscous inflow conditions, the diffusional gas flow rate equation can be corrected to include the dependence of n_2 on time as follows:

$$\frac{dN}{dt} = \frac{\pi v_a D^2 L_o}{12 \ell} (n_1 - n_2) \quad D > L$$

$$\frac{dP_2}{dt} = \frac{dN/dt\, kT}{V_c}$$

or

$$\frac{dn_2 kT}{dt} = \frac{dN/dt\, kT}{V_c}$$

n_1 = constant

n_2 = internal package concentration

L_o = average MFP

v_a = average molecular velocity

After substitution and simplification, the resulting differential equation is of the first order with variables separable, thus

$$\frac{dn_2}{dt} = \frac{dN/dt}{V_c} = \frac{\pi v_a D^2 L_o}{12 \ell V_c} (n_1 - n_2)$$

Separating variables and integrating:

$$\int_d^e \frac{dn_2}{(n_1 - n_2)} = \frac{\pi v_a D^2 L_o}{12 \ell V_c} \int_o^c dt$$

where n_2^o is the initial internal package concentration at $t = 0$

The solution of this integral equation for n_2 or P_2 as a function of time under helium pressure bomb when $d = n_2^o$ at $t = 0$ and $e \Rightarrow n_2^f$ as $c \Rightarrow t_f$ becomes:

$$n_2^f = n_1 \left(1 - (1 - K) e^{\frac{-\pi v_a D^2 L_o t_f}{12 \ell V_c}} \right) \tag{8}$$

$$P_2^f = P_1 \left(1 - (1 - K) e^{\frac{-\pi v_a D^2 L_o t_f}{12 \ell V_c}} \right) \tag{8a}$$

where $K = n_2^o / n_1 = P_2^o / P_1$ and n_2^o is the initial concentration inside the package at $t = 0$.

The diffusional flow rate equation time dependence is obtained by substitution of the above expressions for n_2 and P_2, into the equations for dN/dt and dV/dt, thus:

$$\frac{dN}{dt} = \frac{\pi v_a D^2 L_o n_1}{12 \ell} \left[(1 - K) e^{\frac{-\pi v_a D^2 L_o t_f}{12 \ell V_c}} \right] \tag{8b}$$

$$\frac{dV}{dt} = \frac{\pi v_a D^2 L_o}{12 \ell} \left[\frac{(1 - K) e^{\frac{-\pi v_a D^2 L_o t_f}{12 \ell V_c}}}{1 - (1 - K) e^{\frac{-\pi v_a D^2 L_o t_f}{12 \ell V_c}}} \right] \tag{8c}$$

where dV/dt is measured at pressure $P_o = P_2$

The equations for dN/dt and dV/dt are approximate due to the fact that the mean free path was treated as a constant equal to the average mean free path over the pressure range involved. A more exact treatment requires expressing the MFP in terms of the pressure in the differential equation for dN_2/dt.

After the helium pressure bomb test procedure is completed, the package must be transferred to the bell jar for leak rate measurement. During the transfer, the pressure differential between the internal package pressure and atmospheric pressure will result in viscous or diffusional flow of both the helium gas and the air through the hole, resulting in a loss of helium. Since the viscosities of helium and air at 25°C are 196μ poise and 182μ poise respectively [12], the outflow of helium gas to air will be proportional to their partial pressures inside the can or the ratio: P helium/P air. For this case the time dependent viscous or diffusional flow rate equations apply and the quantity of helium gas lost in the transfer from the bomb chamber to the bell jar can be estimated. The actual transfer time, as will be seen later, becomes extremely important when the equivalent hole diameter exceeds one micron (1 μ). In addition, if a large number of units (100 - 200 devices) are pressure bombed simultaneously and the devices are leak checked in groups of 10 or 20, the transfer time and the time required for actual leak rate measurements becomes important. The specification of a maximum time limit on the time interval between pressure bombing and leak rate measurements using the Helium Leak Detector is necessary to insure that all the bombed devices maintain a partial pressure of helium inside the can, during leak rate measurement, which is approximately equal to the helium partial pressure at the end of the helium pressure bomb test procedure.

Now consider the free-molecular outflow of gas molecules from the internal package volume into the bell jar under vacuum conditions during the leak rate measurement test procedure. The molecular flow rate equation (eq. 6 Section V) valid for this type of gas flow is:

$$\frac{dN}{dt} = \frac{+\pi D^3 v_a}{12\ell} (n_2 - n_1)^{(*)} \quad D < L$$

where

$$L = \frac{2\pi n v_a}{8P}$$

n_1 = constant concentration (vacuum pressure)

n_2 = internal package concentration

v_a = average molecular velocity

and it is evident that the magnitude of dN/dt is determined by the time dependent molecular density n_2, inside the package or enclosed volume.

Since:

$$-\frac{dP_2}{dt} = \frac{dN/dtkT}{V_c}$$

or

$$-\frac{dn_2}{dt} = \frac{dN/dt}{V_c}$$

Substituting the expression for dN/dt into the relation for $\frac{dn}{dt}$, and simplifying:

$$\frac{dn_2}{dt} = -\frac{\pi v_a D^3 (n_2 - n_1)}{12 \ell V_c}$$

Again the resulting differential equation is of the first order with variables separable. Separation of variables and integration gives the following expression:

$$\int_d^e -\frac{dn_2}{(n_2 - n_1)} = \frac{\pi v_a D^3}{12 \ell V_c} \int_o^c dt$$

where n_2^o is the initial concentration within the package at t = 0.

Integration and evaluation of the definite integrals where $d = n_2^o$ at t = 0 and $e \Rightarrow n_2^f$ as $c \Rightarrow t_f$ gives the expression for n_2 and P_2 as a function of time, thus:

$$n_2^f = n_2 \left(1 - (1 - K)\, e^{-\frac{\pi v_a D^3 t_f}{12 \ell V_c}} \right) \tag{9}$$

where $K = n_2^o / n_2$

$$P_2^f = P_2 \left(1 - (1 - K)\, e^{-\frac{\pi v_a D^3 t_f}{12 \ell V_c}} \right) \tag{9a}$$

The free molecular flow rate equation time dependence is obtained by direct substitution of the above expressions for n_2 and P_2 into the equations for dN/dt and dV/dt, thus

$$\frac{dN}{dt} = \frac{\pi v_a D^3}{12\ell}\left[n_2 (1 - K)e^{-\frac{\pi v_a D^3 t_f}{12\ell V_c}}\right] \tag{9b}$$

$$\frac{dV}{dt} = \frac{\pi v_a D^3}{12\ell}\left[\frac{(1 - K)e^{-\frac{\pi v_a D^3 t_f}{12\ell V_c}}}{1 - (1 - K)e^{-\frac{\pi v_a D^3 t_f}{12\ell V_c}}}\right] \tag{9c}$$

where dV/dt is measured at pressure $P_o = P_2$

The time dependent gas flow equations, based on the restricting enclosed volume at the appropriate tube end, that is, the integrated circuit flat package, allows the determination of the initial magnitudes of dN/dt and dV/dt and their time rate of change, and the internal package pressure as a function of time under specified test and package parameters. In particular, the helium bomb pressure and time duration required to detect and accurately measure a defined leak rate range with corresponding equivalent hole diameters can be estimated. In addition, the decrease in the helium partial pressure within the package due to viscous outflow during the transfer of the package from the pressure chamber to the bell jar can be estimated. This information is required since the helium pressure loss within the package during the transfer sets an upper time limit on the time interval between the termination of the pressure bomb cycle and the actual leak rate measurement. It should be noted again that the gas flow equations must include the time dependence corrections due to the boundary conditions imposed on the gas flow during the actual package leak rate measurement technique.

It is clear that, (1) setting t = 0 in both the inflow equations for gas flow rate (dN/dt, dV/dt) and internal package pressure P_2 gives the initial magnitude of dN/dt, dV/dt, and P_2 during the helium pressure bomb test procedure, and (2) setting t = 0 in both the outflow equations for gas flow rate (dN/dt, dV/dt) and internal package pressure P_2 gives the initial magnitude of dN/dt, dV/dt, and P_2 during the leak rate measurement test procedure.

The time-corrected inflow rate equations must be used when the package leak rate is large, as the leak rate magnitude is directly dependent on the effective leak hole

diameter and length. In this case the differential pressure is significantly reduced, due to the increase in the internal package pressure, when subjecting the package to helium pressure bomb for a specified time interval. Similarly, for high package leak rates again implying relatively large equivalent hole diameters, the time corrected outflow gas flow equations must be used when the molecular density or internal package pressure significantly decreases during the time duration required for transfer and package leak rate measurement using the helium leak detector system.

SECTION VII

HELIUM LEAK TEST ANALYSIS AND DETERMINATION OF EQUIVALENT HOLE DIAMETER BASED ON THE MEASURED INTEGRATED CIRCUIT PACKAGE LEAK RATE WITH HELIUM BOMB PRESSURE AND TIME SPECIFIED

1. PHYSICAL PROPERTIES OF THE FLAT PACK INTEGRATED CIRCUIT PACKAGE REQUIRED FOR THE THEORETICAL HELIUM LEAK TEST ANALYSIS

The three essential properties required for hermeticity test analysis of the flat package used for packaging the integrated circuit (SN347-Dual Low-Level Nand Gate) test vehicle used under project DE-65-10 are (1) the internal volume of the package, (2) the average length of the glass-to-metal seals and, (3) the internal package pressure and ambient. The above stated required package properties are:

(1) Internal volume[13] ---------- $\approx 10^{-2}$ cc.

(2) Average glass-to-metal seal length ----- $\approx 0.015''$ or 0.038 cm.

(3) Internal ambient and pressure[13] -------- Air at ≈ 1.0 atm.

In general, the internal volume of the package will vary depending on the physical dimensions of the die and the amount of material used for die attach. Excess glass on the inside of the package at the glass to metal seals will also decrease the internal volume. In addition, there are internal volume differences depending on the TO number of the package used. The glass to metal seal length will vary slightly due to excess glass surrounding the leads. The internal package pressure is nominally one atmosphere[13] (generally < 1.0 atm. since the package is sealed using elevated temperatures which, when returned to ambient room temperature, creates a small partial vacuum within the package). The internal ambient or gas composition will depend on the circuit manufacturer.[13]

2. ANALYSIS OF THE STEADY STATE VISCOUS, DIFFUSIONAL, AND FREE-MOLECULAR GAS FLOW RATES

In general, the type of gas flow existing in a circular tube will be determined by the tube dimensions such as the length ℓ, which will determine whether end corrections for turbulent flow must be considered, and the tube diameter D. If the tube length is long compared to the diameter D, entrance and exit conditions can be neglected and the

type of gas flow existing within the tube over the majority of the tube length will then be determined by the ratio D/L. Thus, for any tube diameter D, it is evident that the magnitude of the molecular mean free path L, which is a function of the absolute pressure at any point along the tube length, will determine the nature of the gas flow. The transition from pure viscous flow (high pressure) to a combination of both viscous and diffusional flow (intermediate pressure) and, finally, to pure free-molecular flow (low pressures) at a fixed tube diameter has generally been described in the literature by the viscous flow laws for the high pressure range, viscous flow corrected for slip at the tube walls for the intermediate pressure range, and the free-molecular flow laws for the low pressure range. Figure 4 shows the average velocity of helium and air at 25°C and[12] the molecular mean free path L as a function of the absolute pressure.

As previously stated, the package manufacturer conducts hermeticity tests on the fabricated integrated circuit package prior to lid and die attachment to determine the quality of the glass to metal seals. One technique using the helium leak detector system consists of sealing one side of the package (vacuum seal) to the helium leak detector and subjecting the other package side to helium gas under one atmosphere pressure. Since the appropriate package sides are under a constant vacuum pressure and a constant one atmosphere helium gas pressure, and there is no limiting package volume, steady state helium gas flow (in this test it is assumed that the free-molecular gas flow law applies) will exist through any defective seal point in the package. The molecular gas flow rate is then independent of time. The package leak rate is then measured using the helium leak detector which is calibrated using a standard leak such as the SC-4. For this type of package leak test, the helium gas flow rates as a function of test parameters and package average glass-to-metal seal length and hole diameter are of importance.

In addition, when subjecting the sealed integrated circuit package to the helium pressure bomb test procedure, if the package volume is relatively large and/or the equivalent leak hole diameter is small, approximate steady state helium gas flow (in this case the viscous or diffusional gas flow laws apply) will also exist through any defective seal point in the package for a time interval determined by the package volume, helium bomb pressure, hole diameter, etc.

The graphs in Figures 5 and 6 show the steady state molecular dN/dt and volume dV/dt gas flow rates for viscous and diffusional flow respectively as a function of test and package parameters. In Figure 5 the viscous flow rates are shown as a function of several nominal helium bomb pressures with assumed tube diameters. The constant pressure of one atmosphere on the opposite tube end and the tube length were selected to simulate the normal internal package pressure and the average glass to metal seal length. In Figure 6 the diffusional flow rates are shown as a function of several helium bomb pressures and an internal package pressure of one atmosphere with assumed tube diameters. Here, again, the pressures and tube lengths were selected to simulate internal package pressures, nominal helium bomb pressures, and the average glass-to-metal seal length used in Figure 5. Figure 7 gives the magnitudes of dN/dt and dV/dt

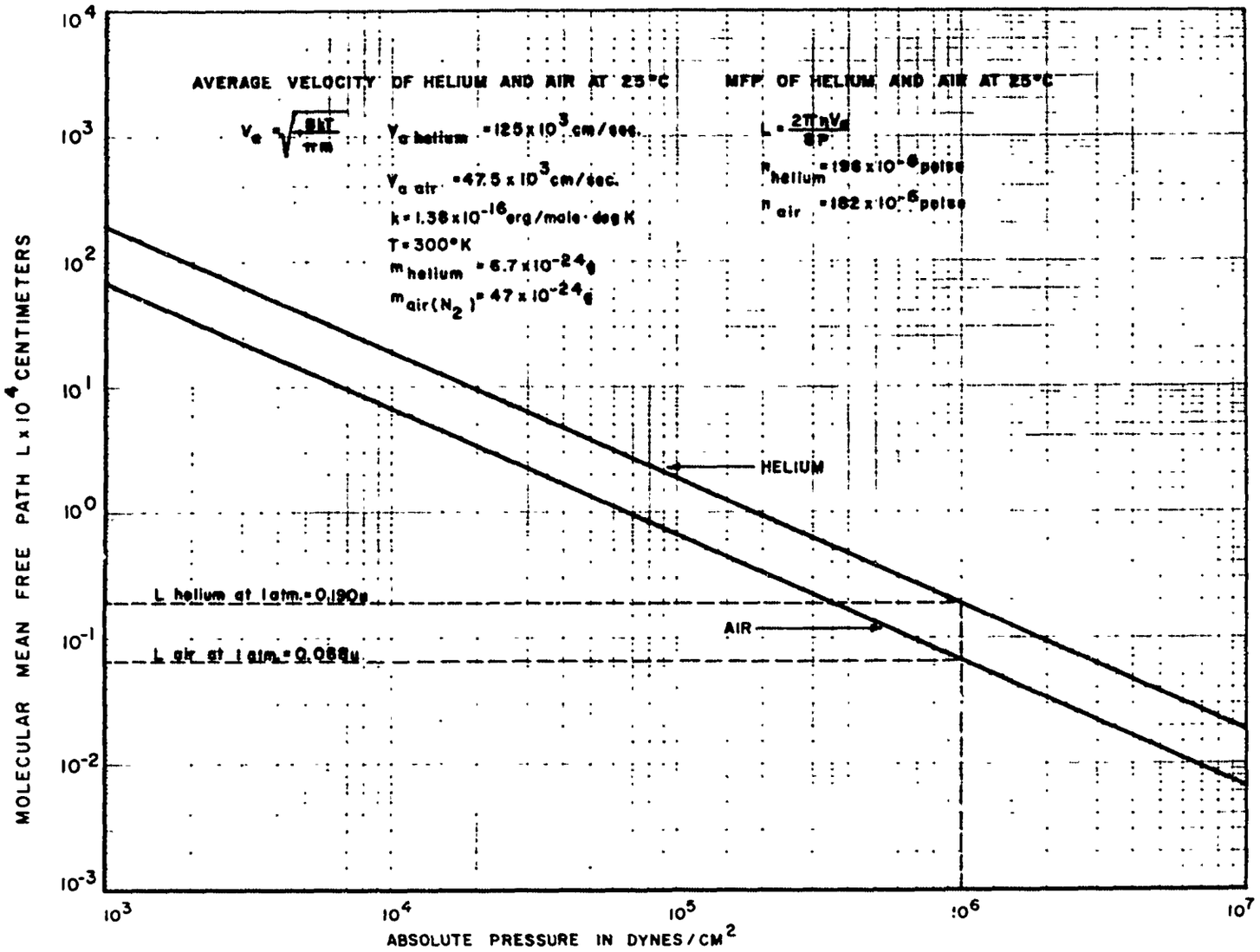

Figure 4. Molecular Mean Free Path L of Helium and Air as a Function of Pressure

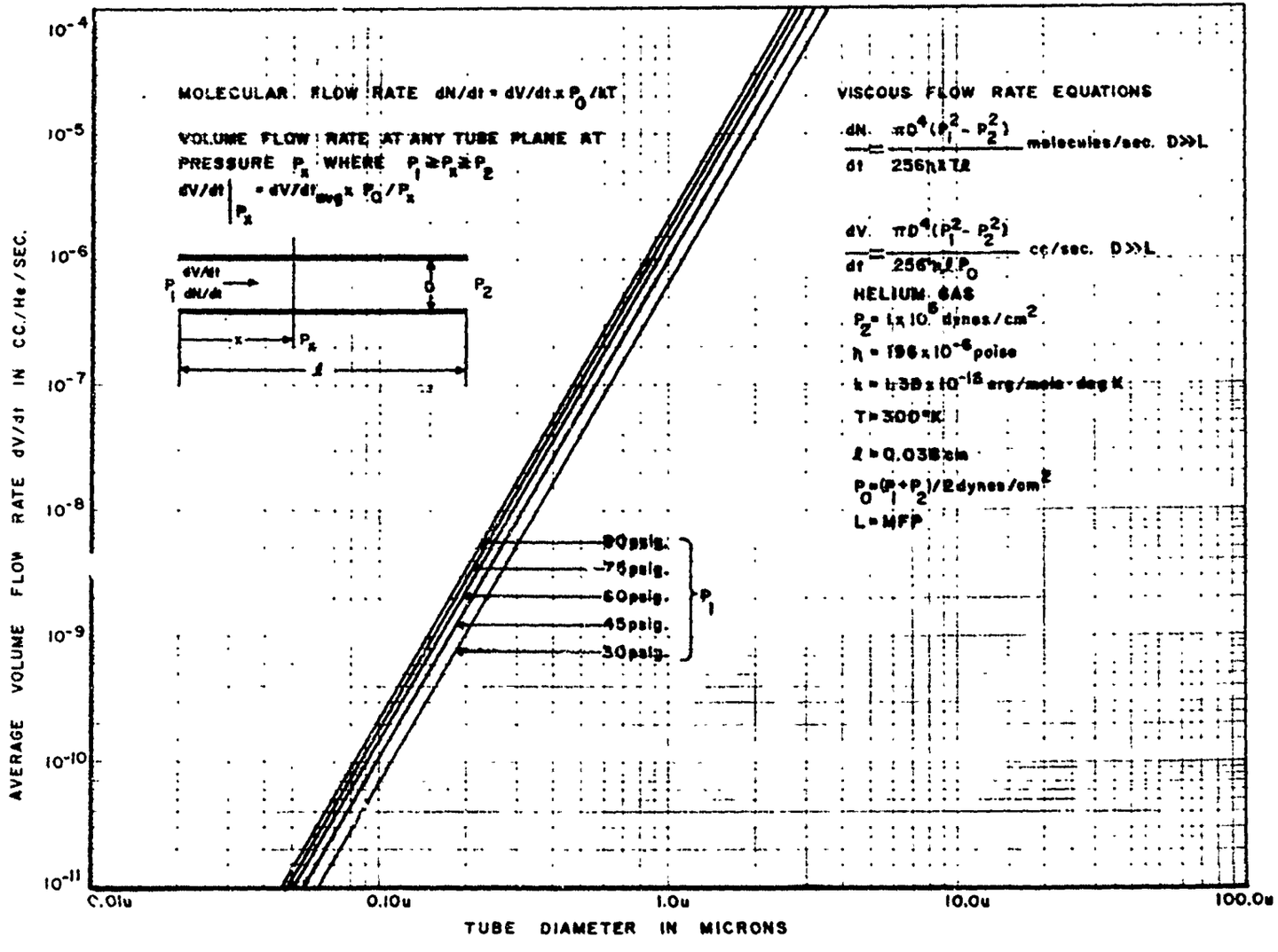

Figure 5. Steady State Helium Viscous Gas Flow Rates (dN/dt, dV/dt) as a Function of Helium Bomb Pressure and Tube Diameter

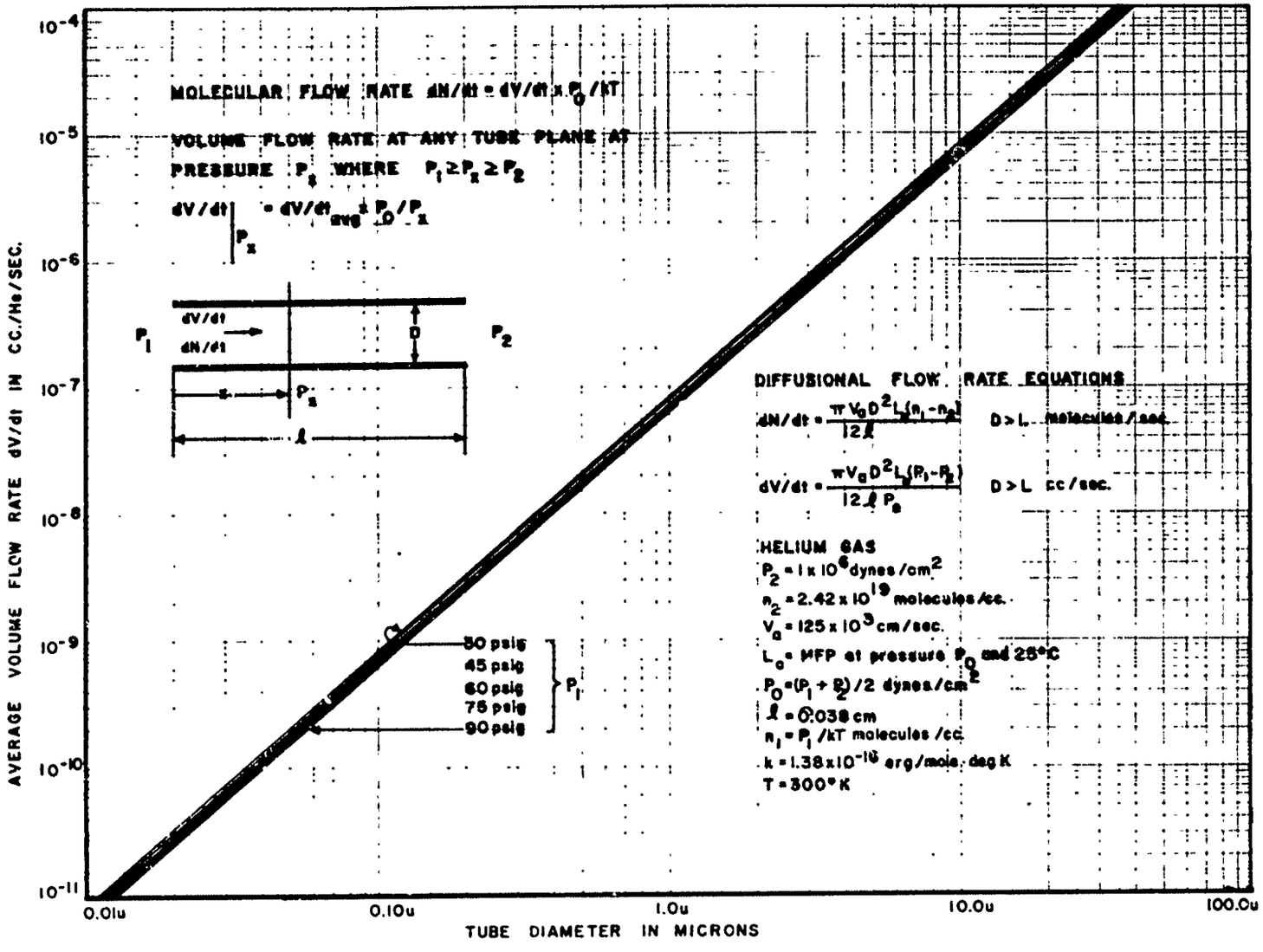

Figure 6. Steady State Helium Diffusional Gas Flow Rates (dN/dt, dV/dt) as a Function of Helium Bomb Pressure and Tube Diameter

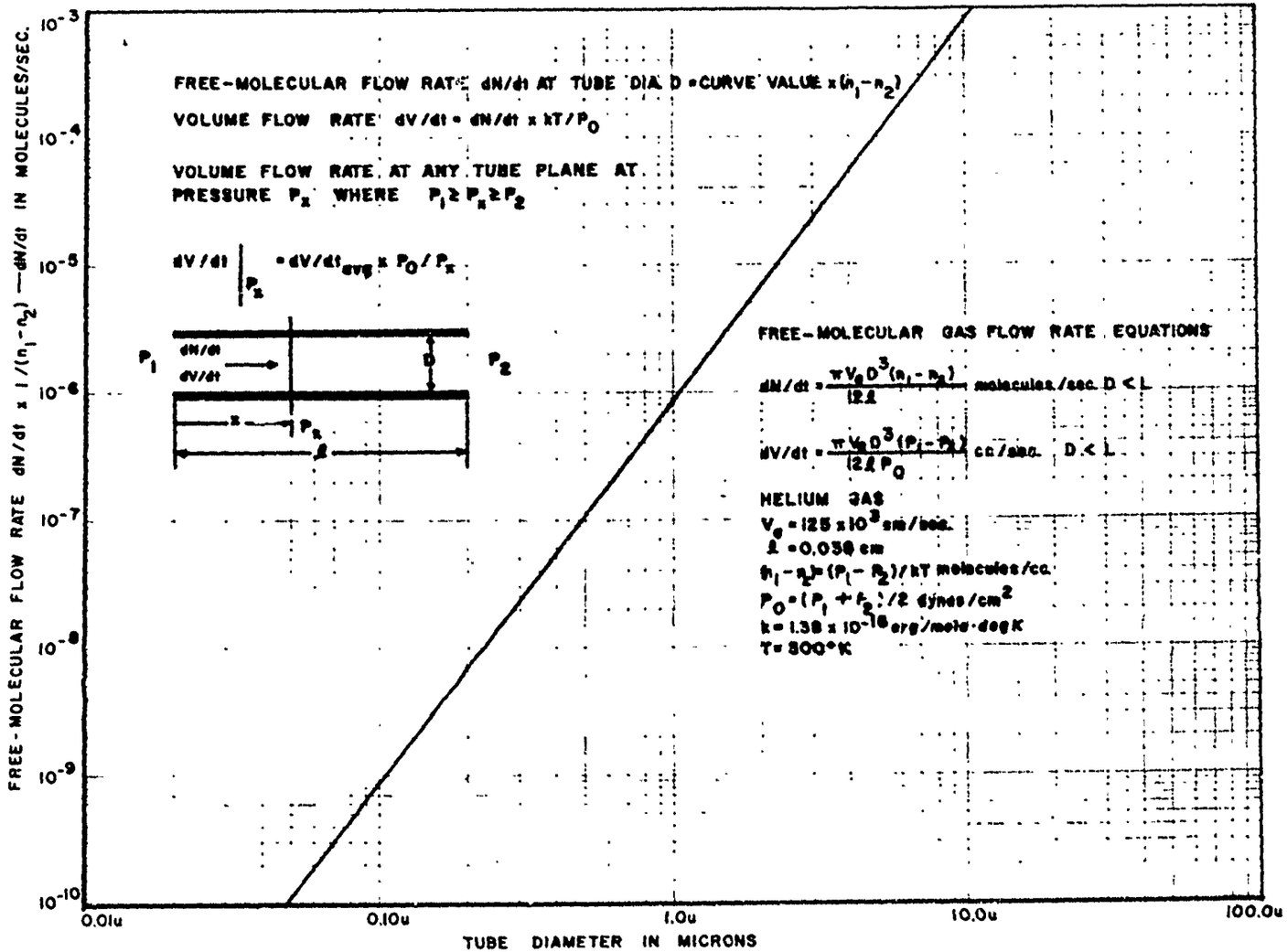

Figure 7. Steady State Helium Free-Molecular Gas Flow Rates (dN/dt, dV/dt) as a Function of Internal IC Package Pressure and Tube Diameter

for helium free-molecular flow in terms of the pressure and concentration differential. The length of the package glass-to-metal seal used in calculating the flow rates is consistent with that value used for determining the viscous and diffusional gas flow rates. Note that for free-molecular flow at these pressures the tube diameter must be considerably smaller than that for viscous or diffusional flow. At one atmosphere the tube diameter required for free-molecular flow must be less than 10^{-5} cm. It is difficult to conceive a tube of constant diameter through a seal with these dimensions. Further, it has been shown by Davis, Levenson, and Milleron[16] that at low pressures, the tube conductance and gas flow rate under free-molecular flow conditions is dependent on the wall surface roughness and, in fact, decreases as the degree of surface roughness increases. As previously stated, in an actual non-hermetic IC package, smooth and continuous leak paths are improbable (e.g., separation of the glass to Kovar lead seal will result in a leakage path bounded on one side by the rough metal).

Inspection of the free-molecular flow rate dN/dt restrictions when $n_2 = 0$, as is the case when the outlet end of the tube is at high vacuum, and $n_1 \approx 10^{19}$ molecules/cc, the approximate molecular density of the internal package gas at one atmosphere, indicates that at the calculated density gradient $dn/dx \approx 10^{19}$ molecules/cc/0.038 cm $\approx 2.6 \times 10^{20}$ molecules/cm^4, the restricting condition of small density gradients is violated. In addition, if $P_2 = 0$ in the volume flow rate equation, the magnitude of dV/dt is totally independent of the pressure P_1 within the package. Based on the preceding statements, the validity of using this equation in describing the helium gas flow out of the package under vacuum conditions with a high internal package pressure is questionable. It appears that a number of conditions could possibly exist depending on the equivalent leak hole diameter and geometry including, (1) a gradual transition from viscous to diffusional gas flow or a combination of both types could exist until the pressure in the package reaches such a value that all restricting conditions for free-molecular flow are satisfied; (2) a transition from viscous or diffusional flow to free-molecular flow at some point within the tube length could occur depending on the hole diameter and the pumping speed of the vacuum system; or (3) the entire tube length could be under high-vacuum conditions.

The preceding discussion points out the difficulty in describing the type of gas flow within a package leak hole or tube during the helium pressure bomb and leak rate measurement test procedures.

The curves of dN/dt and dV/dt shown in Figure 7 assume that the free-molecular flow laws for outflow of helium gas from the package are valid for the helium leak test measurement when the magnitude of the absolute pressure is sufficiently reduced such that the tube or equivalent hole diameter is small compared to the molecular mean free path and the conditions that $D < L$ and small density gradients exist are satisfied.

The pressure at which the volume flow rates were calculated is the average pressure within the tube, $(P_1 + P_2)/2$, thus average volume flow rates are plotted. The

volume flow rate at any plane within the tube at pressure P_x, where $P_1 \geq P_x \geq P_2$, can be determined by multiplying the average volume flow rate by the ratio P_{avg}/P_x. The volume flow rates can also be referenced to standard temperature and pressure by setting $P_x = P_{stp}$.

It should be noted here that the steady state magnitude of dN/dt and dV/dt as shown in Figures 5, 6, and 7, where the specified test and package parameters were selected to represent actual leak test parameters and package properties, gives the initial (t = 0) magnitudes of dN/dt and dV/dt under identical conditions. Here the values of the package pressure and internal volume, hole diameter, etc., require the use of the time corrected gas flow rate equations. Therefore, the gas flow rate equations from which the curves of Figures 5, 6, and 7 were plotted give the magnitudes of dN/dt and dV/dt that are valid for steady state gas flow. These equations and corresponding curves hold where there is no restricting enclosed volume on the system and give only the initial magnitudes of dN/dt and dV/dt when the gas flows through a hole or tube into or out of an enclosed volume, such as the integrated circuit flat package.

Recently, Lund and Berman[15] have developed an equation describing the flow of gases in capillaries of various length-to-radius ratios over the pressure range extending from the free-molecular to viscous gas flow. The flow of gas through a tube under a pressure gradient is expressed as the sum of two terms, namely: (1) a diffusive component which decreases with increasing pressure, and (2) a drift component which increases with increasing pressure. The developed gas flow rate equation gives the same results as those obtained using the classical flow rate equations summarized in Section V of this report, within the limited pressure range over which each flow law is valid in describing the helium gas flow. The magnitudes of dN/dt and dV/dt calculated and plotted in Figures 5, 6, and 7 remarkably agree with the values calculated using the general equation of Lund and Berman.

3. ANALYSIS OF THE TIME-DEPENDENT VISCOUS, DIFFUSIONAL, AND FREE-MOLECULAR GAS FLOW RATES

The time-dependent gas flow rate equations as derived in Section VI where an enclosed volume (IC package) imposed a defined boundary condition on the system will be discussed separately following the testing sequence.

Inspection of the viscous and diffusional gas flow equations describing inflow during the helium bomb pressure test procedure shows that:

- the internal package pressure increases from its initial value of one atmosphere air pressure at t=0 to the helium bomb pressure as $t \to \infty^+$ where the magnitude of V_c, D, ℓ, and P_1 determine the bomb time required to reach pressure equalization.

- the molecular dN/dt and volume dV/dt flow rates decrease from their intitial magnitudes at t=0 to zero as $t \rightarrow \infty^+$ where again the time at which pressure equalization or the flow rate approaches zero is determined by the test and package parameters stated above.

Considering next viscous or diffusional outflow from the package when the package is maintained at one atmosphere external pressure, i.e., during the transfer of the package from the bomb chamber to the bell jar:

- the internal package pressure decreases from its initial value after the helium pressure bomb test procedure at t=0 to a pressure determined by the transfer time. The final pressure if the package is maintained at one atmosphere external pressure obviously would be one atmosphere or pressure equilibrium.

- the molecular and volume flow rates, dN/dt and dV/dt, decrease from their initial magnitude at t=0 to a flow rate again determined by the transfer time. The flow rates go to zero if pressure equalization is attained.

- The time interval required to reach approximate pressure equilibrium, a specific internal package pressure, or gas flow rate is determined by the test and package parameters previously discussed. In addition, the gas composition and flow rates at outflow conditions will be proportional to the internal package partial pressures of helium gas and air.

Finally, considering free-molecular gas outflow from the package where the external package is subjected to high vacuum conditions as is the case during the leak rate test procedure:

- Viscous or diffusional gas flow may exist for a given time interval until the absolute pressure within the package and leak hole is reduced to such a magnitude that for a given hole diameter D, $D < L$ holds, and free-molecular gas flow exists within the tube or hole. During viscous or diffusional flow the internal package pressure and gas flow rates decrease from their initial magnitudes after helium pressure bomb and package transfer at t=0 with time until free-molecular flow exists. The times required to reach a specific package pressure is determined by the test and package parameters.

- Under the conditions of free-molecular flow i.e. when the absolute pressure is such that $D<L$, the internal package pressure and gas flow rates will continue to decrease with time until pressure equilibrium is attained. The final package pressure is determined by the ultimate pressure of the vacuum system.

- During both viscous or diffusional and free-molecular gas outflow from the package, the outflowing gas will contain both helium and air, where the gas flow rates are approximately proportional to the partial pressure of the gas within the package. The approximation is required here since the free-molecular gas flow rate is directly proportional to the average molecular velocity, and from Figure 4, it is seen that the ratio of the average velocity of helium to air is approximately 2.50.

In order to evaluate the effectiveness of the helium leak test system as a reliability screen test, it is necessary to determine the range of molecular or volume leak rates, which are dependent on the package and test parameters as well as the equivalent tube or hole diameter, that are within the detection sensitivity of the system.

Figure 8 shows the results of computer computations indicating the time required for the internal package pressure to attain any specific value and the approximate time for pressure equalization as a function of tube diameter when the integrated circuit package is subjected to a helium bomb pressure of 45 psig. It is apparent that for tube diameters greater than 5 microns, pressure equalization is attained in less than ten minutes, and since the inflow and outflow rates are approximately equal, most of the helium forced into the package during pressure bombing will leak out during the transfer of the package to the bell jar and the pumpdown cycle of the vacuum system prior to the leak rate measurement. For this case, depending on the hole diameter, the measured package leak rate will be orders of magnitude less than the true leak rate and thus could be mistaken for a hermetic package. It is evident that a gross leak test, such as one of the types described in Section III, must be conducted in conjunction with the fine leak test to insure package hermeticity. Currently, there is no single leak test capable of detecting both gross package leaks, i.e., $dV/dt > 10^{-5}$ std. cc/He/sec., and fine package leaks, i.e., $10^{-9} < dV/dt < 10^{-5}$ std.cc/He/sec.

Further, at a tube diameter of 0.5 microns, the bomb time required to attain an internal helium partial pressure of one atmosphere is approximately 100 hours. This pressure bomb time is excessive, from the manufacturer's viewpoint, when the user specifies a helium leak screen test on thousands of individual units. Thus the standard bomb time used by the semiconductor industry is generally four (4) hours at a bomb pressure of 45 psig and represents a tradeoff between detection sensitivity and testing time. Therefore, under these specified test conditions, the helium leak test is optimized to detect and measure with reasonable accuracy the necessary range of package leak rates. The current maximum integrated circuit package leak rate specification is $dV/dt < 5 \times 10^{-7}$ std.cc/He/sec. In addition, measured leak rates $< 10^{-9}$ std.cc/He/sec. may be attributed entirely to the outgassing of adsorbed helium on the external package surfaces. The nitrogen gas flush test procedure reduces this adsorbed helium; however, the presence of greases or films on the package could result in significant outgassing of adsorbed helium which points out the necessity for a clean

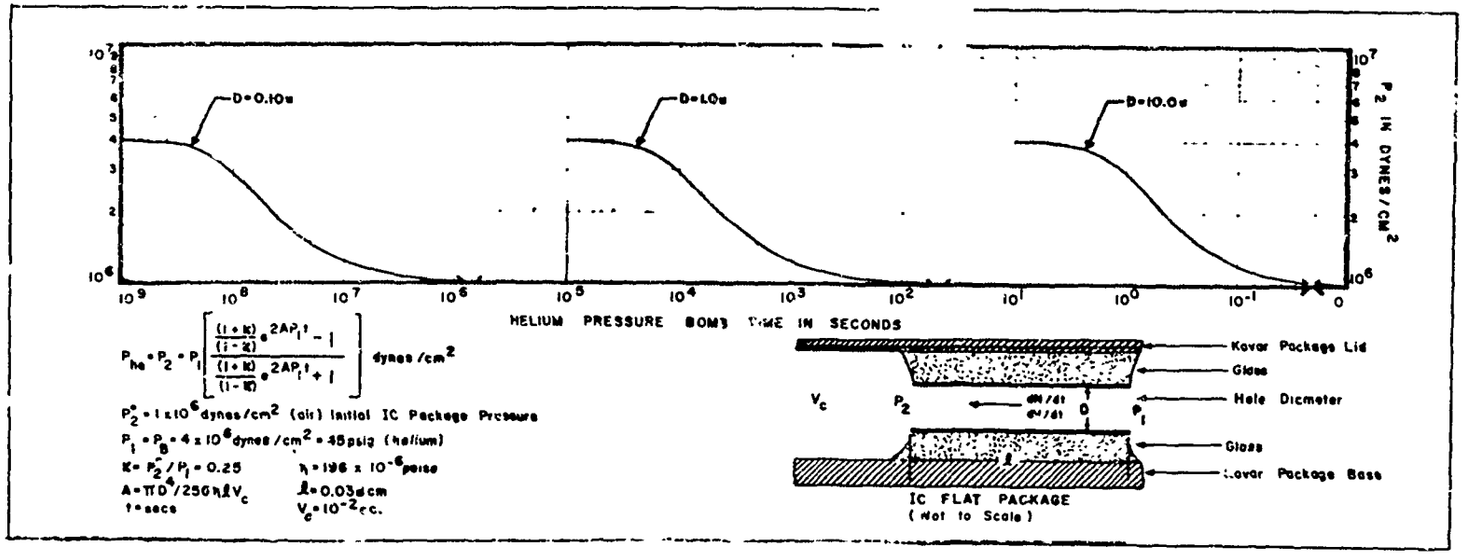

Figure 8. IC Package Internal Helium Partial Pressure Due to Viscous Flow as a Function of Helium Pressure Bomb Time for Several Hole Diameters

external package surface. It is readily apparent that the package leak rate range over which the helium leak test system is most sensitive lies in the 10^{-9} - 10^{-6} std. cc/He/sec range which corresponds to equivalent hole diameters in the range from 0.5-5.0 microns. Secondly, the greater the ratio of the partial pressure of helium to air within the package, the more accurate the measured package leak rate becomes. This is due to the fact that the helium leak detector system detects only helium gas flowing out of the package, and since the leak rate is defined by the equivalent hole diameter the true leak rate is the summation of the leak rate of helium and air.

Since package hermeticity is an essential requirement for assuring the reliability of integrated circuits and there is no single hermetic seal test capable of detecting and measuring package leak rates over the required range ($dV/dt \geq 10^{-9}$ cc/sec.), both a fine and a gross leak test, in that order, must be conducted to assure package hermeticity. The test order is important when gross leak tests using liquid tracer fluids are employed since minute particle contaminants within the liquid can seal existing leakage paths prior to fine leak testing. However, even when both fine and gross leak tests are performed, a nonhermetic package can escape detection. In the case of a gross leaker where the volume leak rate is equal to or greater than 10^{-4} std. cc/sec., the defective seal point or hole can be temporarily sealed by particles or contaminants in the test solution particular to the type of gross leak test utilized. In addition, there exists the volume leak rate range from approximately 10^{-6} to 10^{-4} std. cc/sec., where both the fine leak tests, including the Helium and Radiflo test, and the gross leak tests are relatively insensitive. Within the above leak rate range, the equivalent hole diameters are relatively large and, when using either of the standard fine leak test systems, most of the tracer fluid forced into the package during the pressure bomb test procedure flows out of the package before the leak rate measurement is performed, resulting in a measured leak rate orders of magnitude lower than the actual leak rate. Further, the detection sensitivity of the standard gross leak tests for leak rates less than 10^{-4} std. cc/sec., is a matter of speculation.

The measurement of package hermeticity utilizing the described standard fine and gross leak tests is based purely on the detection of a tracer fluid which is forced into the package and the subsequent detection of the fluid within or penetrating the package. It is readily apparent that these types of hermeticity tests measure package integrity with no direct correlation between circuit reliability and package leak rate. A measured package leak rate exceeding the maximum specified value may be the summation of the leak rates of a large number of small holes (defective seal points), or a single large hole. In the former case, the average hole diameter can be small enough such that no appreciable amount of water vapor or moisture can penetrate the defective seals. In the latter case, the diameter of the singular hole can be large enough to allow the penetration of a sufficient amount of moisture to cause circuit parameter degradation. Thus, the concept of a maximum acceptable leak hole diameter specification has inherently more physical meaning when relating package hermeticity to integrated circuit reliability.

4. DETERMINATION OF EQUIVALENT LEAK HOLE DIAMETER

One method for estimating the equivalent hole diameter based on a measured package leak rate was presented by Nielson and Weisberg.[14]

Assuming that the laws of viscous flow are valid under helium pressure bomb test conditions, Poiseuille's law can be used to determine the final concentration of helium gas within the package as a function of test parameters, package properties, and hole diameter as follows:

$$\frac{dN}{dt} = \frac{\pi D^4 (P_1^2 - P_2^2)}{256 \eta k T \ell} \tag{2}$$

Following the analysis of Neilson and Weisberg, integrating this first order differential equation to obtain the total number of molecules forced into the package in time t:

$$N_2 = \frac{\pi D^4 (P_1^2 - P_2^2)\, t}{256 \eta k T \ell}$$

Solving for the tube diameter in terms of the test parameters one obtains:

$$D^4 = \frac{256 \eta k T \ell N_2}{\pi (P_1^2 - P_2^2)\, t}$$

where P_1 is the helium bomb pressure, P_2 is the initial internal package pressure, t is the pressure bomb time, and N_2 is the final concentration (number of molecules) of helium forced into the package in time t.

During outflow under vacuum conditions the solution of the free-molecular flow equation for the equivalent hole diameter in terms of the measured leak rate dN/dt, the initial concentration of helium within the package n_2, and package properties gives:

$$D^3 = \frac{dN/dt\ (12 \ell)}{\pi V_a (n_2 - n_1)} \tag{6}$$

Since $N_2 = (n_2 - n_1) \times$ Volume of the package, the two expressions for the tube diameter can be combined and solved for the equivalent leak hole diameter which results in the following relation:

$$D = \left[\frac{3072\, \eta k\, T \ell^2\, V_c\, (dN/dt)}{\pi^2\, v_a\, (P_1^2 - P_2^2)\, t} \right]^{1/7} \quad (14) \qquad (10)$$

This equation is obviously valid only for small package leak rates since it assumes that during helium pressure bomb and leak rate measurement test procedures the magnitudes of dN/dt and P_2 (n_2) at both inflow and outflow conditions are independent of time. In addition, this final equation for estimating the equivalent hole diameter based on a measured package leak rate assumes that, since N_2 was considered equal to $(n_2 - n_1) \times$ Package Volume, the free-molecular gas flow law is valid for determining the rate of outflow of helium gas at relatively high pressures (10^4 - 10^7 dynes/cm^2 or 0.01 - 10 atmospheres) which may introduce a significant error as discussed in Section VII-2. With reference to the curves of Figure 4, it is apparent that for the nominal tube diameters ranging from 0.10 to 10 microns, free-molecular flow will exist when the pressure is approximately equal to or less than 10^4 dynes/cm^2. Depending on the tube diameter and pumping speed of the vacuum system, it is conceivable that the pressure within the package could decrease to an absolute pressure of 10^4 dynes/cm^2 during the pumpdown cycle. To determine the error in the calculated value of D when the leak rate measurement is made at a time when the package pressure differs significantly from the pressure after the helium pressure bomb, assume a condition where the internal package pressure after helium pressure bomb is 10^7 dynes/cm^2. It is clear that if the package leak rate dN/dt is measured at time t_m when the internal package pressure is near 10^4 dynes/cm^2, the ratio

$$\frac{n_2}{n_t} = \frac{\dfrac{N_2}{V_c}\ \text{(concentration after helium pressure bomb)}}{\dfrac{N_t}{V_c}\ \text{(concentration at time of dN/dt measurement)}} = 10^3 \text{ where } n_1 \simeq 0$$

and it follows that: $N_2 = 10^3\, n_t \times$ Volume

Solving for the diameter D using this equality between the inflow and outflow equations results in increasing the radicand by the factor of 10^3. Thus, the calculated value of D assuming $(n_2 - n_1) = N_2/V_c$ will be smaller than the actual value by a factor of

$\sqrt[7]{10^3}$. The more correct value of D will then be D calculated multiplied by $\sqrt[7]{10^3}$ or more generally:

$$D_{actual} = D_{calculated} \times \sqrt[7]{\frac{P_2 \text{ (pressure after helium bomb)}}{P_m \text{ (pressure at dN/dt measurement)}}} \qquad (11)$$

Comparison of the calculated values of D from both the original and the modified expression, giving the more accurate value for D using standard test parameters and package properties, indicates that the equation given by Neilson and Weisberg[14] gives order of magnitude approximations for the equivalent hole diameter over a limited range of diameters. The accuracy of the calculated value of D, when the pressure at which the package leak rate is measured is unknown, is greatest at the small hole diameters, and significant error is introduced when the hole diameter exceeds 5 microns for reasons explained previously.

Another consideration is the fact that the viscous inflow laws are only approximately valid if the equivalent leak hole is the effective summation of several smaller diameter holes. Further, both the inflow and outflow of helium gas from the package can result from the diffusion of the helium through the glass seals or ceramic material depending on the type of package. If this condition exists, the equations used for estimating the equivalent leak hole diameter will not accurately describe the type of gas flow existing under test conditions.

SECTION VIII

CONCLUSIONS AND RECOMMENDATIONS

The review and analysis of the classical steady flow rate equations pointed out the important flow characteristics and the restricting conditions under which steady state viscous, diffusional, and free-molecular gas flow can exist in a cylindrical tube. These basic equations were then expanded to include the necessary time dependence corrections required when an enclosed volume, i.e., the integrated circuit package, is imposed on the system.

The steady state molecular and volume flow rate versus tube diameter curves shown in Figures 5-7 allow a rapid determination of dN/dt and dV/dt magnitudes for the basic types of helium gas flow through cylindrical tubes over a range of tube diameters and inlet and outlet pressures. The pressure magnitudes were selected to simulate typical internal and external package pressures consistent with the helium leak test system. The tube length used was the average glass-to-metal seal length of several integrated circuit metal flat packages. These curves are consistent with the results obtained using the Lund-Berman general gas flow rate equation.

Analysis of the helium leak test system using the time corrected flow equation shows that the volume leak rate range over which the helium system has the greatest detection sensitivity is from 10^{-9} to 10^{-6} std. cc/He/sec. In addition, the detection sensitivity of the standard gross leak tests decreases significantly for package leak rates less than 10^{-4} std. cc/sec. Therefore, it is evident that hermeticity testing of integrated circuit packages must include both a fine and a gross leak test. However, non-hermetic packages can still escape detection due to the lack of overlap between the fine and gross leak tests. Both tests are relatively insensitive for detecting non-hermetic packages with volume leak rates in the 10^{-6} to 10^{-4} std. cc/sec. range. Therefore a single hermeticity screen test capable of detecting and accurately measuring the total volume leak rate range of $dV/dt \geq 10^{-9}$ std. cc/sec. is required.

The time dependent flow rate equations developed in this report can be used to estimate gas flow rates and internal package pressures as a function of time under defined hermeticity test parameters and actual package properties. Secondly, the helium bomb time and pressure required to optimize the helium leak test sensitivity over a desired volume leak rate range can be determined. At a helium bomb pressure of 45 psig, the hole diameter required for a volume leak rate of 5×10^{-7} std. cc/He/sec., the standard maximum IC package leak rate specification, is approximately 0.85 μ (microns). A specified minimum helium partial pressure within the package of one

atmosphere after pressure bomb requires a four-hour helium pressure bomb time. This specified minimum internal helium pressure and the helium bomb test parameters of 45 psig for four hours represents a reasonable engineering tradeoff between leak detection sensitivity and test time.

The detection sensitivity of the helium system can be increased by employing a closed system with a two-port pressure chamber, with the inlet and outlet connected directly to the high pressure helium tank and leak detector respectively, thereby eliminating package transfer and minimizing vacuum pumpdown time. However, it is felt that the slight increase in detection sensitivity gained increases primarily the leak rate measurement accuracy for volume leak rates within the range of the maximum sensitivity of the system.

The evaluation of integrated circuit package integrity employing the standard hermeticity tests discussed is obviously not based on an established correlation between package leak rate and circuit reliability. Therefore, studies directed toward determining the time required for a given ppm of water vapor, which is sufficient to degrade circuit parameters, to penetrate a package as a function of equivalent hole diameter and external ambient relative humidity must be conducted.

The projected high usage of plastic encapsulation or packaging by the semiconductor industry will accelerate the development of hermeticity tests based entirely on device reliability, since the package volume here is the volume of plastic encapsulant surrounding the device. The ultimate reliability of integrated circuits can be achieved only when the design of reliability accelerated stress tests and screen tests are based on the physical mechanisms which contribute to circuit parameter degradation.

APPENDIX

DERIVATION OF THE CLASSICAL EQUATIONS DESCRIBING FLUID FLOW THROUGH LONG CYLINDRICAL TUBES APPLICABLE IN THE DETERMINATION OF INTEGRATED CIRCUIT PACKAGE LEAK RATES

1. POISEUILLE'S LAWS OF VISCOUS FLUID FLOW FOR LIQUIDS AND GASES

When an incompressible fluid, e.g., a liquid, flows under steady state conditions through a closed tube, both the mass and the volume passing any given point within the tube per unit time are constant. However, with a compressible fluid, e.g., a gas, the mass per unit time is still constant (continuity of mass flow under steady state conditions requires that no accumulation or diminution of fluid occurs), but the effects of pressure and temperature on the volume cause a variation in the volume flow rate at points within the tube. The derivations used here for viscous flow rates of both incompressible and compressible fluids follow that given by Kennard.[17] In the following fluid flow derivations the high pressure tube end and the low pressure tube end will be designated P_1 and P_2 respectively.

Consider a liquid flowing in a cylindrical tube of length ℓ and radius a due to a pressure differential Δp between the inlet and outlet end of the tube as shown in Figure A-1. It will be assumed that the flow is steady and everywhere parallel to the axis of the tube, p is a function of x only, v is a function of r only, and that the liquid in contact with the tube wall has zero velocity (i.e., no slip occurs). The preceding conditions imply laminar flow of the liquid. Since the fluid is incompressible, the pressure is uniformly distributed throughout the length of the tube ℓ, and the pressure gradient $dp/d\ell$ is constant.

Further, consider a fluid inside an inner cylinder within the cylindrical tube with length dx and radius r.

For a steady flow of fluid due to the pressure differential to exist in the axial direction, the net force due to the pressure differential at opposite ends of the elemental length dx must equal the viscous force or drag exerted by adjacent fluid cylinders on each other. Thus, the following condition must be met for steady flow to exist:

$$\Sigma F_x \text{ (due to pressure differential)} = F_v \text{ (due to viscous drag)} \qquad \text{(A-1)}$$

Since pressure equals force per unit area,

$$\Sigma F_x = P_1 A - P_2 A = A \Delta P \qquad \text{(A-1a)}$$

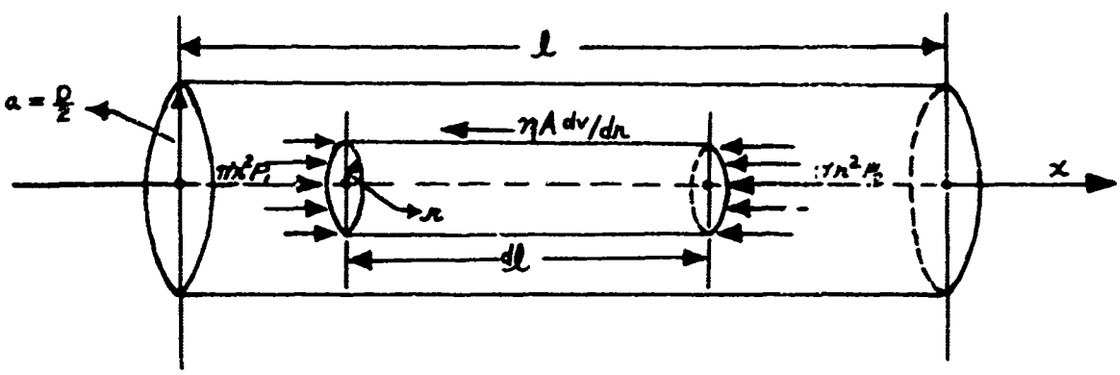

Figure A-1. Force Diagram for Fluid Flow Through a Cylindrical Tube Due to a Pressure Differential

The viscous or frictional force F_v, resisting the relative motion of any two adjacent fluid layers, is proportional to S, the area of the interface, and to dv/dr, the velocity gradient between them. This is illustrated in Figure A-2. Expressed mathematically:

$$F_v \sim S\frac{dv}{dr} \qquad \text{or} \qquad F_v = -\eta\, S\frac{dv}{dr} \tag{A-1b}$$

where dv/dr is negative and the constant of proportionality

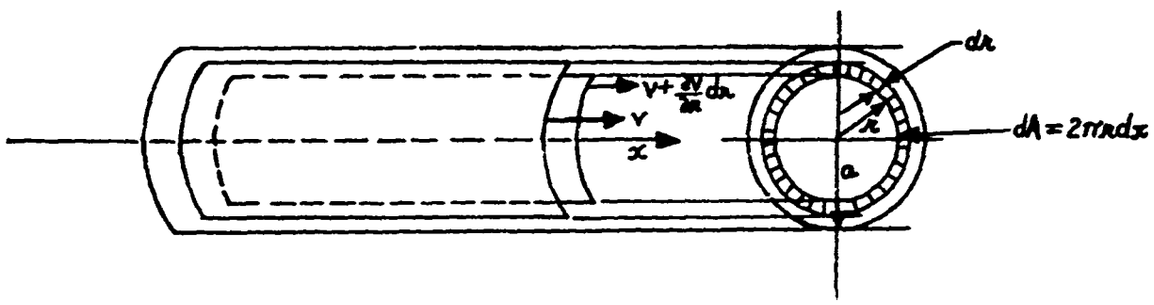

Figure A-2. Diagram Illustrating the Frictional Force Resisting the Relative Motion of Two Adjacent Layers of a Viscous Fluid

where η is the coefficient of viscosity and is characteristic of the fluid.

Then, equating forces:

$$\pi r^2 \, dp = -\eta \, 2\pi r \, dx \frac{dv}{dr} \tag{A-2}$$

Since $\frac{dp}{dx}$ is constant over the tube length ℓ

$$\frac{dp}{dx} = -(p_1 - p_2)/\ell \tag{A-2a}$$

Rewriting equation A-2:

$$-dv = -\frac{(p_\ell - p_2)}{2\eta} r \, dr \tag{A-2b}$$

Integrating, assuming no slip at the tube wall such that at $r = a$, $v = o$

$$-\int_{v_1}^{o} dv = -\frac{(p_1 - p_2)}{2\eta\ell} \int_{r_1}^{a} r \, dr$$

$$v = -\frac{(p_1 - p_2)}{4\eta\ell} (a^2 - r^2) \tag{A-3}$$

To obtain the total volume V or liquid flow through the tube per unit time:

$$\frac{dV}{dt} = \int v \, dA = \int_{o}^{a} v \, 2\pi r \, dr \tag{A-4}$$

Substituting the expression for v:

$$\frac{dV}{dt} = -2\pi \frac{(p_1 - p_2)}{4\eta\ell} \int_o^a (a^2 - r^2)\, r\, dr$$

$$\frac{dV}{dt} = -2\pi \frac{(p_1 - p_2)}{4\eta\ell} \int_o^a (a^2 r - r^3)\, dr \qquad \text{(A-4a)}$$

Integration of the above expression yields:

$$\frac{dV}{dt} = -\frac{2\pi (p_1 - p_2)}{4\eta\ell} \left[\frac{a^2 r^2}{2} - \frac{r^4}{4} \right]_o^a$$

$$\frac{dV}{dt} = \frac{\pi a^4}{8\eta\ell} (p_1 - p_2) \qquad \text{(A-5)}$$

Thus, assuming no slip at the tube wall, equation A-5 represents Poiseuille's equation for the volume flow rate of an incompressible fluid where the volume flow rate is constant throughout the tube length.

Consider now the flow of a compressible fluid, a gas, where the pressure gradient $\frac{dp}{dx}$ along the tube is not a constant. Using equation (A-2):

$$\pi r^2 dp = -\eta 2\pi r\, dx \frac{dv}{dr} \qquad \text{(A-2)}$$

Again assuming no slip at the tube wall such that at v = o, r = a, rearranging and integrating:

$$\int_{v_1}^{o} dv = \frac{1}{2\eta} \frac{dp}{dx} \int_{r_1}^{a} r\, dr$$

$$-V = \frac{1}{2\eta} \left[\frac{a^2}{2} - \frac{r^2}{2} \right] \frac{dp}{dx} \qquad \text{(A-6)}$$

The above equation expresses the velocity of gas flow in the tube as a function of the pressure gradient at a specific plane and the radial distance r from the tube axis.

Since the mass of the gas flowing through any cross sectional area of the tube per unit time must be a constant, the mass flow rate can be determined as follows:

$$\frac{dV}{dt} \times \rho \text{ (density)} = \frac{dM}{dt} \tag{A-6a}$$

$$\int_0^a 2\pi r v dr = \text{total volume flowing through a cross sectional area of the cylindrical tube} \tag{A-6b}$$

Multiplying the volume flow rate by the density of the fluid at a specific plane within the tube, we obtain the total mass flow through that plane per unit time:

$$\frac{dM}{dt} = \rho \int_0^a 2\pi r v dr \tag{A-6c}$$

Now, $\rho = pM/RT$ where p is pressure, M is the molecular mass, R is the gas corstant, and T the absolute temperature in an ideal gas.

Thus, the density of the gas at any plane within the tube is a function of the pressure at that plane. Note here that for an incompressible fluid the density is not a function of pressure.

Substituting for ρ and v and integrating:

$$\frac{dM}{dt} = -\frac{2\pi}{4\eta} \frac{pM}{RT} \frac{dp}{dx} \int_0^a (a^2 - r^2) r dr \tag{A-6d}$$

$$\frac{dM}{dt} = -\frac{2\pi}{4\eta} \frac{pM}{RT} \frac{dp}{dx} \left[\frac{a^2 r^2}{2} - \frac{r^4}{4} \right]_0^a$$

$$\frac{dM}{dt} = -\frac{\pi a^4}{8\eta} \frac{pM}{RT} \frac{dp}{dx} \tag{A-6e}$$

Integrating over the tube length ℓ and the pressure p where p_1 and p_2 are the pressures at opposite ends of the cylindrical tube, we can obtain the total mass flow per unit time at any plane of the tube:

$$\int_0^{\ell} dx \left(\frac{dM}{dt}\right) = -\frac{\pi a^4}{8\eta} \left(\frac{M}{RT}\right) \int_{p_1}^{p_2} pdp \qquad \text{(A-6f)}$$

$$\frac{dM}{dt} = \frac{\pi a^4}{8\eta\ell} \left(\frac{M}{RT}\right) \left[\frac{1}{2} (p_1^2 - p_2^2)\right] \qquad \text{(A-6g)}$$

Now the volume flow rate at a cross sectional plane within the tube can be determined by dividing the last equation by the density of the fluid at that plane which, in turn, is a function of the pressure p_o at that plane.

Thus:

$$\frac{dV}{dt} = \frac{dM}{dt} \div \rho = \frac{\pi a^4}{8\eta\ell p_o} \left[\frac{1}{2} (p_1^2 - p_2^2)\right] \qquad \text{(A-6h)}$$

Here, p_o is the pressure at which the volume flow rate is measured.

Again, where there is no slip at the wall of the tube, the volume flow rate at pressure p_o is expressed by the following:

$$\frac{dV}{dt} = \frac{\pi a^4}{16\eta\ell p_o} (p_1^2 - p_2^2) \qquad \text{(A-7)}$$

The basic equations for the volume flow rate of an incompressible and a compressible fluid in terms of the tube diameter D, where $\frac{D}{2} = a$, can be expressed as follows:

$$\frac{dV}{dt} = \frac{\pi D^4}{128\eta\ell} (p_1 - p_2) \text{ where } D >> L \text{ (Incompressible Fluid)} \qquad \text{(A-8)}$$

$$\frac{dV}{dt} = \frac{\pi D^4}{256\eta\ell p_o} (p_1^2 - p_2^2) \text{ where } D >> L \text{ (Compressible Fluid)} \qquad \text{(A-9)}$$

The equation for the volume flow rate of a compressible fluid (i.e., a gas) can be expressed in terms of the molecular flow rate as follows:

$$pV = nRT \text{ or } p_o V = nRT$$

Now, k (Boltzmann's Constant) $= \frac{R}{N^\circ} \frac{\text{(gas constant)}}{\text{(Avogadro's Number)}}$

Therefore, $R = kN^\circ$ and $p_o V = nRT = (nN^\circ)kT$

$$V = \frac{(nN^\circ)kT}{p_o}$$

Rewriting, we have:

$$\frac{dV}{dt} = \frac{\pi D^4}{256\eta\ell p_o}(p_1^2 - p_2^2)$$

$$\frac{dV}{dt} = \frac{d}{dt}\frac{(nN^\circ)kT}{p_o} = \frac{\pi D^4}{256\eta\ell p_o}(p_1^2 - p_2^2) \qquad \text{(A-10)}$$

$$\frac{dN}{dt} = \frac{\pi D^4 (p_1^2 - p_2^2)}{256\eta kT\ell}$$

where $N = nN^\circ$ = number of molecules and $D >> L$.

2. DIFFUSIONAL FLOW LAWS OF A GAS

Consider the molecular flow by diffusion through a circular tube due to a concentration gradient, dn/dx. In this case a uniform temperature and pressure throughout the tube must be assumed since both a temperature gradient, dT/dx, and a pressure gradient, dp/dx, will result in gas flow through the tube. It is assumed then that, $P_1 \cong P_2$, the temperature is uniform, $D >$ L, and a concentration gradient dn/dx exists along the tube.

The fundamental diffusion equation (Fick's first diffusion law) is expressed as follows:

$$\frac{dN}{dt} \sim \frac{Adn}{dx} \text{ or } \frac{dN}{dt} = -AD^* \frac{dn}{dx} \quad (18) \qquad \text{(A-11)}$$

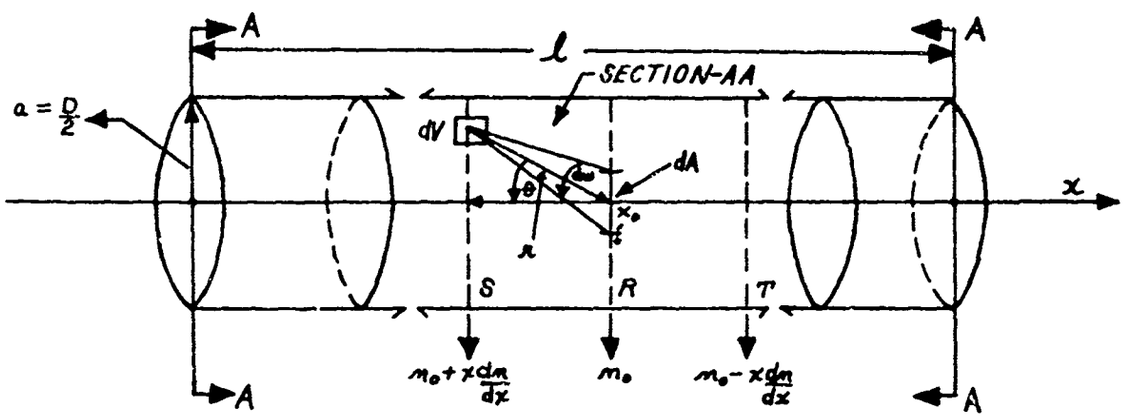

Figure A-3. Diagram Used in Deriving the Diffusional Gas Flow Law Through a Cylindrical Tube Due to a Concentration Gradient

where dN/dt is the number of molecules per second passing a given plane of cross-sectional area A, D* is the diffusion coefficient, or coefficient of self-diffusion and dn/dx is the concentration gradient along the tube.

It is further assumed that the tube cross-sectional area is circular with diameter D, and that the concentration gradient, dn/dx, is uniform throughout the tube. Thus, substituting expressions for the cross-sectional area and concentration gradient the above equation becomes:

$$\frac{dN}{dt} = -\frac{D^* \pi D^2}{4} \frac{(n_1 - n_2)}{\ell} \tag{A-11a}$$

In general, the magnitude of D*, which is a function of the molecular velocity and mean free path, is determined by the particular gas under consideration and can be derived using the Kinetic Theory of Gases. The circular tube geometrical dimensions, D (diameter) and ℓ (tube length), and the molecular concentrations n_1 and n_2 at opposite ends of the tube can be assigned representative numerical values for molecular flow rate analysis. The complete derivation of the coefficient of self-diffusion is given by Sears,[19] and is expressed as follows:

$$D^* = \frac{1}{3} v_a L \tag{A-11b}$$

where D* is the coefficient of self-diffusion,

v_a is the molecular average velocity and,

L is the mean free path at the pressure within the tube.

The total number of molecules flowing past any circular plane within the tube per unit time is:

$$\frac{dN}{dt} = -D^* A \frac{dn}{dx} = -D^* \frac{\pi D^2}{4} \frac{(n_1 - n_2)}{\ell} \tag{A-11c}$$

Substituting for D* (diffusion coefficient)

$$\frac{dN}{dt} = -\frac{\pi D^2 v_a L}{12 \ell} (n_1 - n_2) \tag{A-12}$$

where $D > L$ and $P_1 \cong P_2$

and

$$\frac{dV}{dt} = \frac{\pi D^2 v_a L (P_1 - P_2)}{12 \ell P_o} \tag{A-12a}$$

where $D > L$

Since the molecular concentrations n_1 and n_2 at opposite ends of the tube have different magnitudes, diffusional gas flow can be interpreted as a flow resulting from the partial pressure gradient created within the tube.

It should be noted here that if a pressure gradient exists along the tube length, the total molecular flow rate will be the sum of the viscous and the diffusional flow rates. In general, however, the viscous flow rate will exceed the diffusional flow rate only when $D >> L$. Thus, as D approaches the magnitude of L, the diffusional flow rate will predominate.

3. FREE-MOLECULAR FLOW LAWS OF A GAS

The preceding molecular flow rate derivation assumed $D > L$, a condition under which intermolecular collisions occur. Now, if $D < L$, the collision of molecules with the walls of the tube rather than intermolecular collisions will predominate and determine the molecular flow rate. A uniform temperature throughout the tube must again be assumed. The appropriate molecular flow rate when $D < L$ is derived by Kennard[17] using the kinetic theory of gases and is given by the following equation:

$$\frac{dN}{dt} = \frac{\pi D^3 v_a (n_1 - n_2)}{12 \ell} \tag{A-13}$$

where:

$D < L$

$D << \ell$

$\frac{L}{n} \frac{dn}{dx} << 1$

The following derivation for the free-molecular flow rate of a gas through a cylindrical tube of diameter D and length l differs from that given by Kennard[17] in that the molecular flow rate $\frac{dn}{dt}$ at any point in the cross-sectional area of the circular tube is derived. The total flow rate at any plane in the circular tube can then be determined by integration over the cross-sectional area. Kennard's flow equation is in a more general form, where the cross-sectional area can assume various geometrical shapes.

Figure A-4 shows a circular tube of radius a and length ℓ. It is assumed that the tube walls are perfectly diffusing surfaces, the temperature is uniform, and that a

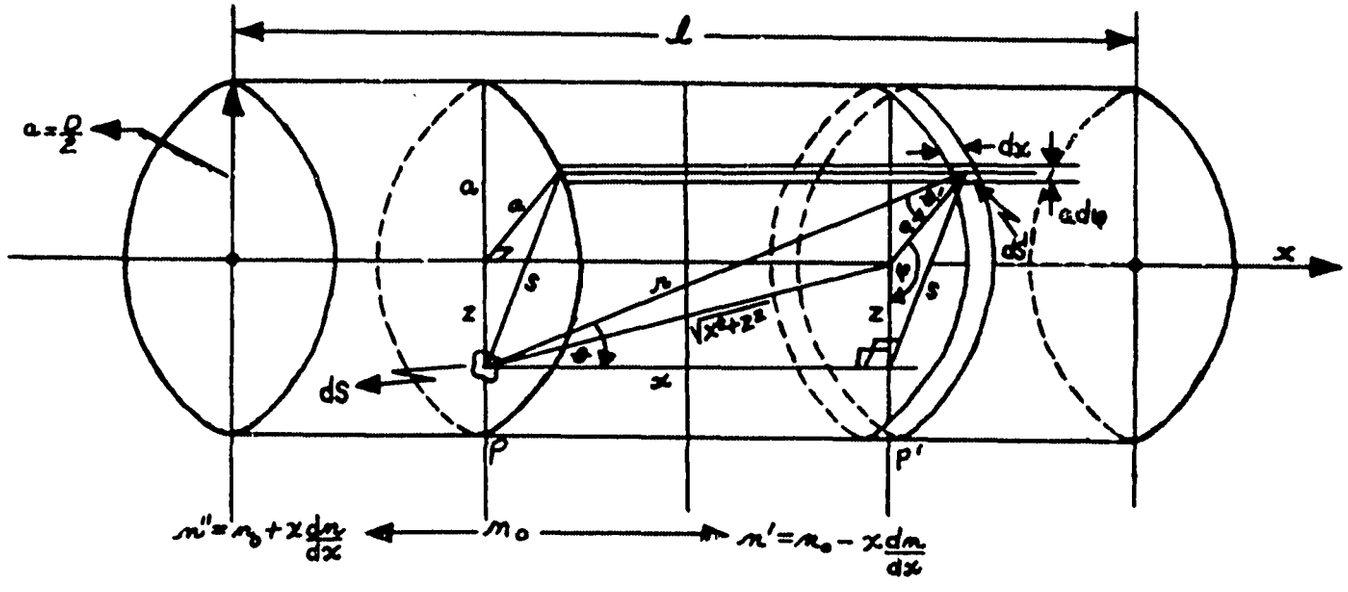

Figure A-4. Diagram Used in Deriving the Free-Molecular Gas Flow Law Through a Cylindrical Tube Due to a Pressure Gradient

constant pressure differential, $(P_1 - P_2)$ between the two opposite ends of the tube is maintained such that a concentration gradient, $\frac{dn}{dx}$ exists along the tube length.

Consider an elemental area ds, a distance z from the tube axis and lying in the cross-sectional plane designated P. The molecules flowing through ds come from all points on the interior wall surfaces and since perfectly diffusing surfaces are assumed, the total number of molecules flowing toward ds from an elemental surface area ds' is

$$dN = \frac{n' V_a ds' dt \, ds' \cos \theta'}{4\pi r^2} \qquad \text{(A-13a)}$$

where

$$dw = \frac{ds \cos \theta}{r^2}$$

From Figure A-4 the following relations are apparent:

$$r^2 = x^2 + s^2$$

$$\cos\theta = \frac{X}{r}$$

$$\left.\begin{aligned} \cos\theta' &= \frac{r^2 + a^2 - (x^2 + z^2)}{2ra} \\ s^2 &= a^2 + z^2 - 2az \cos\psi \end{aligned}\right\} \text{(Cosine Law)}$$

$$r^2 = x^2 + a^2 + z^2 - 2az \cos\psi$$

$$ds' = a\,d\psi\,dx$$

Substituting for $\cos\theta$, $\cos\theta'$, ds':

$$dN = \frac{n' v_a ds dt}{4\pi r^2} \frac{(x)}{r} \frac{(r^2 + a^2 - x^2 - z^2)}{2ra} a\,d\psi\,dx$$

The concentration n' at any plane p', where the restriction of small concentration gradients is imposed, can be expressed as:

$$n' = n_o + x \frac{dn}{dx}$$

Substituting for n' gives:

$$dN = \frac{v_a dsdt}{4\pi r^2} \frac{(x)}{r} \frac{(r^2 + a^2 - x^2 - z^2)}{2ra} \frac{(n_o + xdn)}{dx} ad\psi dx \qquad \text{(A-13b)}$$

Then substituting for r to obtain dN in terms of a, x, z, and ψ gives the general equation describing molecular flow through dS in time dt:

$$dN = \frac{v_a dSdtna}{4\pi} \left[\frac{x\,(a - z\cos\psi)}{(x^2 + a^2 + z^2 - 2az\cos\psi)^2} d\psi dx \right]$$

$$+ \frac{v_a dSdt\,a\,dn}{4\pi\ dx} \left[\frac{x^2\,(a - z\cos\psi)}{(x^2 + a^2 + z^2 - 2az\cos\psi)^2} d\psi dx \right] \qquad \text{(A-13c)}$$

The total number of molecules flowing through dS in time dt is then:

$$dN = \frac{v_a dSdtna}{4\pi} \int_0^{2\pi} \int_{-\infty}^{+\infty} \frac{x\,(a - z\cos\psi)\,dxd\psi}{(x^2 + a^2 + z^2 - 2az\cos\psi)^2}$$

$$+ \frac{v_a dSdt\ adn}{4\pi\ dx} \int_0^{2\pi} \int_{-\infty}^{+\infty} \frac{x^2\,(a - z\cos\psi)}{(x^2 + a^2 + z^2 - 2az\cos\psi)^2} dxd\psi \qquad \text{(A-13d)}$$

The integral contained in the first term of this expression vanishes, thus:

$$dN = \frac{v_a dSdt\ a\ dn}{4\pi\ dx} \int_0^{2\pi} \int_{-\infty}^{+\infty} \frac{x^2\,(a - z\cos\psi)}{(x^2 + a^2 + z^2 - 2az\cos\psi)^2} dxd\psi \qquad \text{(A-13e)}$$

Integration with respect to dx gives:

$$dN = \frac{v_a\ dSdt\ adn}{4\pi\ dx} \int_0^{2\pi} (a - z\cos\psi) \int_{-\infty}^{+\infty} \frac{x^2\ dx\ d\psi}{(x^2 + C^2)^2}$$

where

$$C^2 = a^2 + z^2 - 2az \cos \psi$$

Then:

$$dN = \frac{v_a dSdt\ a\ dn}{4\pi\ dx} \int_0^{2\pi} (a - z \cos \psi) \frac{(\pi)}{2C} d\psi$$

$$dN = \frac{v_a dSdt\, a\, dn}{8\ dx} \int_0^{2\pi} \frac{(a - z \cos \psi)\ d\psi}{(a^2 + z^2 - 2az \cos \psi)^{1/2}} \qquad \text{(A-13f)}$$

Integration with respect to $d\psi$ to obtain the general expressions for the total number of molecules flowing through dS in time dt as a function of z, the radial distance from the tube axis, requires a numerical integration. However, the integral is directly solvable at two values of z, namely z = 0 and z = a.

At z = 0

$$dN = \frac{v_a dSdt\, a\, dn}{8\ dx} \int_0^{2\pi} d\psi = \frac{v_a \pi dSdt\ adn}{4\ \ dx}$$

At z = a

$$dN = \frac{v_a\ dSdt\ adn}{8\ \ dx} \int_0^{2\pi} \sqrt{1 - \cos \psi}\ d\psi = \frac{v_a \pi dSdt\ adn}{2\pi\ \ \ dx}$$

This flow integral was evaluated at several values of z by numerical integration, using the following integral form:

$$\text{F. I.} = \int_0^{2\pi} \frac{(a - z \cos \psi)\, d\psi}{(a^2 + z^2 - 2az \cos \psi)^{1/2}} = \int_0^{2\pi} \frac{(1 - \chi \cos \psi)\, d\psi}{(1 + \chi^2 - 2\chi \cos \psi)^{1/2}} \qquad \text{(A-13g)}$$

where $z = \chi a$

The results of computer calculations is shown in the Figure A-5 and gives the value of the flow integral from $\varkappa = 0$ to $\varkappa = 1$ corresponding to $z = 0$ and $z = a$ respectively.

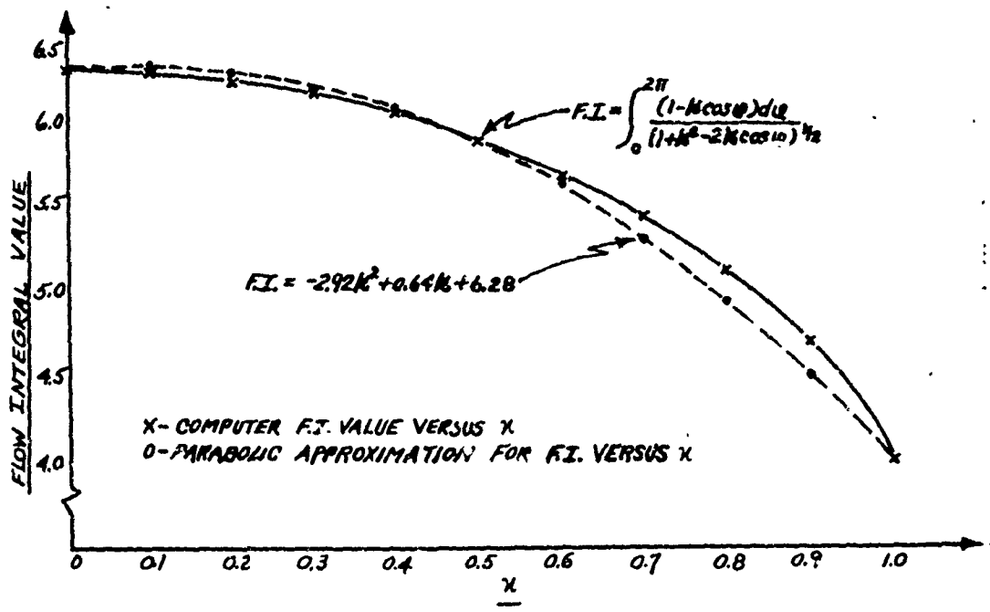

Figure A-5. Graph of Flow Integral Versus $\varkappa$

The expression for dN/dt, through an elemental area dS at a point z, a radial distance $\varkappa a$ from the axis, using the parabolic approximation function then becomes:

$$\frac{dN}{dt} = \frac{v_a \, adn \, dS}{8 \, dx} \left[- 2.92 \frac{z^2}{a^2} + 0.64 \frac{z}{a} + 6.28 \right] \tag{A-13h}$$

Integration over the circular cross-sectional area where $dS = z d\psi dz$

$$\frac{dN}{dt} = \frac{v_a \, adn}{8 \, dx} \int_0^{2\pi} \int_0^a z \left(-2.92 \frac{z^2}{a^2} + 0.64 \frac{z}{a} + 6.28 \right) dz d\psi \tag{A-13i}$$

$$\frac{dN}{dt} = \frac{v_a \, (adn) \, 2\pi \, (2.62 \, a^2)}{8 \, dx} = \frac{\pi v_a a^3 \, dn}{1.525 \, dx} \tag{A-13j}$$

In terms of the tube diameter D and tube length ℓ the flow rate becomes:

$$\frac{dN}{dt} = \frac{\pi v_a D^3 (n_1 - n_2)}{12.2 \ell} \tag{A-13}$$

where

$D < L$

$D << \ell$

$\frac{L}{n} \cdot \frac{dn}{dx} << 1$

$$\frac{dV}{dt} = \frac{\pi v_a D^3 (P_1 - P_2)}{12.2 \ell \, P_o} \tag{A-14}$$

The equations derived in this section are valid after steady state, flow exists within the tube. Entrance and exit conditions were considered negligible. The gas flow equations derived, including limiting conditions, are summarized for reference in the following subsection.

These equations are valid when considering small package leak rates where the change in the internal package pressure during both the inflow (helium pressure bomb) and outflow (leak rate measurement) test procedures can be considered negligible.

4. SUMMARY OF EQUATIONS CHARACTERIZING FLUID FLOW THROUGH A CIRCULAR TUBE INCLUDING DEFINITION OF TERMS

Type of Fluid Flow	Equation		Equation Referenced	Limiting Conditions
Poiseuille's Law for Flow of an incompressible fluid, i.e., a liquid	$\frac{dV}{dt} = \frac{\pi D^4 (P_1 - P_2)}{128 \eta \ell}$		(A-8)	$D \gg L$
Poiseuille's Law for Flow of a compressible fluid, i.e., a gas	$\frac{dV}{dt} = \frac{\pi D^4 (P_1^2 - P_2^2)}{256 \eta \ell P_o}$	(1)	(A-9)	$D \gg L$
	$\frac{dN}{dt} = \frac{\pi D^4 (P_1^2 - P_2^2)}{256 \eta k T \ell}$	(2)	(A-10)	$D \gg L$
Diffusional Flow of a gas due to a concentration gradient (Large diameter tube equation)	$\frac{dN}{dt} = \frac{\pi D^2 L v_a (n_1 - n_2)}{12 \ell}$	(4)	(A-12)	$D > L$ $P_1 \simeq P_2$
	$\frac{dV}{dt} = \frac{\pi D^2 L v_a (P_1 - P_2)}{12 \ell P_o}$	(3)	(A-12a)	$D > L$
Free-molecular Flow of a gas due to a concentration gradient or pressure gradient (Small diameter tube equation)	$\frac{dN}{dt} = \frac{\pi D^3 v_a (n_1 - n_2)}{12 \ell}$	(6)	(A-13)	$D < L$ $D \ll \ell$ $\frac{L}{n} \cdot \frac{dn}{dx} \ll 1$
	$\frac{dv}{dt} = \frac{\pi D^3 v_a (P_1 - P_2)}{12 \ell P_o}$	(5)	(A-14)	$D < L$ $D \ll \ell$ $\frac{L}{n} \cdot \frac{dn}{dx} \ll 1$

DEFINITION OF TERMS

dV/dt = flow rate through circular tube in terms of volume (cc) of liquid or gas flowing per unit time

dN/dt = gas flow rate through circular tube in terms of the number of molecules flowing per unit time

D	=	diameter of circular tube in centimeters
ℓ	=	length of circular tube in centimeters
η	=	viscosity of fluid in poise (gm/sec. cm)
k	=	Boltzmann's Constant in ergs $^{\circ}K^{-1}$
T	=	absolute temperature (Degree Kelvin)
L	=	mean freepath of molecules in centimeters
v_a	=	average velocity of molecules in cm/sec.
N^o	=	Avogadro's number (molecules mol^{-1})
D^*	=	Coefficient of self-diffusion (cm^2/sec)
R	=	Universal gas constant in ergs $^{\circ}K^{-1}$ mol^{-1}
P_o	=	Average pressure or pressure at which dV/dt is measured in dynes/cm^2
P_1, P_2	=	pressures at opposite ends of circular tube in dynes/cm^2
n_1, n_2	=	concentration of the gas molecules under consideration at opposite ends of the tube in terms of the number of molecules per unit volume (molecules/cc)
dP/dx	=	pressure gradient along tube in terms of force per unit area (dynes/cm^2) per unit length.
dn/dx	=	concentration gradient along tube in terms of molecules per unit volume (molecules/cc) per unit length.

5. ANALYSIS OF THE CLASSICAL STEADY STATE GAS FLOW EQUATIONS

The classical steady state equations describing the various types of gas flow through cylindrical tubes point out the nature of the flow and the restricting conditions required for each type of flow to exist (viscous, diffusional, and free-molecular). The variation in the gas flow rate through a given cross-sectional plane within the tube, the variation of the flow rate at points within any specified tube plane, and the

molecular dN/dt and volume dV/dt flow rates as a function of the type of gas, hermeticity test parameters and package properties are also indicated. It is readily apparent that for steady state viscous gas flow:

- D >> L for viscous flow to exist within the tube.
- The magnitude of dN/dt and dV/dt is directly proportional to the fourth power of the tube diameter and the difference between the inlet and the outlet pressure squared.
- The molecular flow rate dN/dt is equal and constant at all planes within the tube.
- The volume flow rate dV/dt at any plane within the tube is constant with time but since dV/dt is a function of the pressure at a specific plane, dV/dt varies along the tube length.
- The pressure gradient dP/dx along the tube varies linearly.
- The molecular flow is a maximum at the center of the tube and decreases to zero at the wall.

In the case of steady state pure diffusional gas flow:

- D > L for diffusional flow to exist.
- The magnitude of dN/dt and dV/dt is directly proportional to the square of the tube diameter, the mean free path of the gas molecules, and the pressure differential.
- The molecular flow rate dN/dt is equal and constant at all planes within the tube.
- The volume flow rate dV/dt at any plane within the tube is constant with time and is a function of the pressure at that plane as in the case of viscous flow.
- The pressure gradient dP/dx and concentration gradient dn/dx along the tube is constant.
- The molecular flow is uniform at all points within any plane of the tube.

Lastly, for steady state free-molecular flow:

- $D < L$ for free-molecular gas flow to exist.
- The magnitude of dN/dt and dV/dt is directly proportional to (a), the third power of the tube diameter and, (b) the pressure differential.
- The molecular flow rate dN/dt is equal and constant at all planes within the tube.
- The volume flow rate dV/dt at any plane within the tube is constant or time independent. However, the flow rate at a specific plane is a function of the pressure at that plane, thus the volume flow rate varies along the tube length.
- The pressure gradient dP/dx and concentration gradient dn/dt along the tube is constant.
- The molecular flow is a maximum at the center of the tube and decreases by a factor of approximately 2.50 from its value at the center at the tube wall.

The intent of the above analysis is to delineate the basic dependences, limiting conditions, and distinct differences in the three types of gas flow considered, some of which are not readily apparent by inspection of the final equations.

REFERENCES

1. "N-type Surface Conductivity on P-type Germanium," W. L. Brown, Physical Review Vol. 91, p. 518, 1953.

2. "Stability of Thermally Oxidized Silicon Junctions in Wet Atmospheres," M.M. Atalla, A.R. Bray and R. Linder, Suppl. Proc. Inst. Elec. Engrs. 106, p. 1130, 1959.

3. "Effect of Surface Recombination and Channel on P-N Junction and Transistor Characteristics," C.T. Sah, IEEE Trans. on Elec. Dev., Vol. 9 pp. 94-108, 1962.

4. "Investigation of Thermally Oxidized Silicon Surfaces Using Metal-Oxide-Semiconductor Structures," A.S. Grove, B.E. Deal, E.H. Snow and C.T. Sah, Solid State Electronics Vol 8, p. 145, 1965.

5. "Failure Mechanisms in Silicon Semiconductors," W. Schroen and W.W. Hooper, Final Report, RADC-TR-64-524, March 1965. (AD 615-312)

6. "Detailed Study of Deleterious Effects on Silicon Transistors," Dr. Ki Dong Kang, Final Report, RADC-TR-65-35, May 1965. (AD 465-920)

7. "Semiconductor Reliability - The Correlation of Excess Noise With Deleterious Surface Phenomena," E.A. Doyle Jr., J.S. Smith, and G.G. Sweet, RADC-TR-65-379, December 1965. (AD 627891)

8. "Investigation of Reliability Testing and Prediction Techniques for Integrated Circuits," H.G. Carlson, S.L. Gill, J.E. Hall, et.al., RADC-TR-65-463. February 1966. (AD 479895)

9. "A Study of Failure Mechanisms In Silicon Planar Epitaxial Transistors," H. Sello, et al., RADC-TR-66-36, June 1966 (AD 487527)

10. "Mechanisms of Channel Current Formation In Silicon P-N Junctions," D.J. Fitzgerald and A.S. Grove, Paper presented at the Fourth Physics of Failure Symposium, Chicago, November 1965. See list of References.

11. "Microelectronic Packaging Concepts," RADC-TR-65-61, July 1965. (AD 619444)

12. "Scientific Foundations of Vacuum Technique," S. Dushman, John Wiley & Sons, Inc., New York, 1949, pp 13, 31 and 36.

13. "Investigation of Surface Failure Mechanisms In Semiconductor Devices by Envelope Ambient Studies," G.V. Brandewie, P.H. Eisenburg, and R.A. Meyer, Paper presented at the Fourth Annual Physics of Failure Symposium, Chicago, November 1965.

14. "Analysis of Leak Detection In Industrial Silicon Rectifiers," J.M.S. Neilson and H. Weisberg, Solid State Design, pp 28-32, September 1963.

15. "Flow and Self-Diffusion of Gases in Capillaries. Part I and Part II," L.M. Lund and A.S. Berman, Journal of Applied Physics, pp 2489-2508, Vol. 37, May 1966.

16. "Effect of 'Rougher-than-Rough' Surfaces on Molecular Flow through Short Ducts," D.H. Davis, L.L. Levenson, and N. Milleron, Journal of Applied Physics, Vol 35, pp. 529-532, March 1964.

17. "Kinetic Theory of Gases," E. H. Kennard, McGraw - Hill Book Co. Inc. New York and London, 1938, pp. 292-294 and pp. 302-305.

18. "Gas Chromatography, "H. Purnell, John Wiley & Sons Inc., New York and London, 1942, pp. 46-47.

19. "An Introduction To Thermodynamics — The Kinetic Theory of Gases and Statistical Mechanics," F.W. Sears, Second Edition, third printing, December 1956, pp. 269-272.

UNCLASSIFIED

Security Classification

DOCUMENT CONTROL DATA - R&D

(Security classification of title, body of abstract and indexing annotation must be entered when the overall report is classified)

1 ORIGINATING ACTIVITY (Corporate author) Rome Air Development Center Reliability Branch Griffiss Air Force Base, New York 13440	2a REPORT SECURITY CLASSIFICATION UNCLASSIFIED 2b GROUP N/A

3 REPORT TITLE

ANALYSIS OF INTEGRATED CIRCUIT PACKAGE INTEGRITY USING HELIUM LEAK DETECTION TECHNIQUES

4 DESCRIPTIVE NOTES (Type of report and inclusive dates)

Final Report on Hermeticity Testing under DE-65-10

5 AUTHOR(S) (Last name, first name, initial)

Doyle, Edgar A. Jr.

6 REPORT DATE May 1967	7a TOTAL NO OF PAGES 84	7b NO OF REFS 19
8a CONTRACT OR GRANT NO b PROJECT NO DE-65-10 c d	9a ORIGINATOR'S REPORT NUMBER(S) RADC-TR-67-52 9b OTHER REPORT NO(S) (Any other numbers that may be assigned this report)	

10 AVAILABILITY/LIMITATION NOTICES

This document has been approved for public release and sale; its distribution is unlimited.

11 SUPPLEMENTARY NOTES	12 SPONSORING MILITARY ACTIVITY Rome Air Development Center, EMERP Griffiss Air Force Base, New York 13440

13 ABSTRACT Current integrated circuit packaging techniques, a compilation of applicable package hermeticity testing techniques, and the required theoretical fluid flow background necessary to evaluate integrated circuit package integrity, are presented. The basic types of integrated circuit packages are described with the emphasis placed on defects in package construction and hermetic sealing techniques which can influence package integrity. A general description of standard hermeticity tests is given, and their inherent limitations, when used in determining integrated circuit package leak rates, are discussed. The helium leak detection system and test procedures for package leak rate measurements (dV/dt-std.cc/He/sec.) are described. A complete review and analysis of the classical steady state helium gas flow rate equations are given. The time dependence corrections to the classical flow laws, required when an enclosed volume (e.g. and IC flat pack) is imposed on the system are derived and applied to the helium leak detection technique. The analysis includes a detailed determination of equivalent hole diameters based on the measured package leak rate. The importance of obtaining a hermetically sealed package with reference to integrated circuit reliability is then discussed.

In the classical steady state gas flow analysis, the derivation of the free-molecular flow rate law is noteworthy. The specific approach taken in deriving this gas flow rate law allows a determination of the variation in the molecular flow rate mangitude at points within a cross-sectional plane of a cylindrical tube. This variation in molecular flow rate has been implied in the literature; however, the functional dependence of dN/dt on the radii distance from the tube axis has not previously been explicity determined.

DD FORM 1473

UNCLASSIFIED

Security Classification

UNCLASSIFIED
Security Classification

14 KEY WORDS	LINK A ROLE	LINK A WT	LINK B ROLE	LINK B WT	LINK C ROLE	LINK C WT
Circuit Packaging						
Hermeticity Tests						
Reliability						

INSTRUCTIONS

1. ORIGINATING ACTIVITY: Enter the name and address of the contractor, subcontractor, grantee, Department of Defense activity or other organization *(corporate author)* issuing the report.

2a. REPORT SECURITY CLASSIFICATION: Enter the overall security classification of the report. Indicate whether "Restricted Data" is included. Marking is to be in accordance with appropriate security regulations.

2b. GROUP: Automatic downgrading is specified in DoD Directive 5200.10 and Armed Forces Industrial Manual. Enter the group number. Also, when applicable, show that optional markings have been used for Group 3 and Group 4 as authorized.

3. REPORT TITLE: Enter the complete report title in all capital letters. Titles in all cases should be unclassified. If a meaningful title cannot be selected without classification, show title classification in all capitals in parenthesis immediately following the title.

4. DESCRIPTIVE NOTES: If appropriate, enter the type of report, e.g., interim, progress, summary, annual, or final. Give the inclusive dates when a specific reporting period is covered.

5. AUTHOR(S): Enter the name(s) of author(s) as shown on or in the report. Enter last name, first name, middle initial. If military, show rank and branch of service. The name of the principal author is an absolute minimum requirement.

6. REPORT DATE: Enter the date of the report as day, month, year; or month, year. If more than one date appears on the report, use date of publication.

7a. TOTAL NUMBER OF PAGES: The total page count should follow normal pagination procedures, i.e., enter the number of pages containing information.

7b. NUMBER OF REFERENCES: Enter the total number of references cited in the report.

8a. CONTRACT OR GRANT NUMBER: If appropriate, enter the applicable number of the contract or grant under which the report was written.

8b, 8c, & 8d. PROJECT NUMBER: Enter the appropriate military department identification, such as project number, subproject number, system numbers, task number, etc.

9a. ORIGINATOR'S REPORT NUMBER(S): Enter the official report number by which the document will be identified and controlled by the originating activity. This number must be unique to this report.

9b. OTHER REPORT NUMBER(S): If the report has been assigned any other report numbers *(either by the originator or by the sponsor)*, also enter this number(s).

10. AVAILABILITY/LIMITATION NOTICES: Enter any limitations on further dissemination of the report, other than those imposed by security classification, using standard statements such as:

(1) "Qualified requesters may obtain copies of this report from DDC."

(2) "Foreign announcement and dissemination of this report by DDC is not authorized."

(3) "U. S. Government agencies may obtain copies of this report directly from DDC. Other qualified DDC users shall request through _____."

(4) "U. S. military agencies may obtain copies of this report directly from DDC. Other qualified users shall request through _____."

(5) "All distribution of this report is controlled. Qualified DDC users shall request through _____."

If the report has been furnished to the Office of Technical Services, Department of Commerce, for sale to the public, indicate this fact and enter the price, if known.

11. SUPPLEMENTARY NOTES: Use for additional explanatory notes.

12. SPONSORING MILITARY ACTIVITY: Enter the name of the departmental project office or laboratory sponsoring *(paying for)* the research and development. Include address.

13. ABSTRACT: Enter an abstract giving a brief and factual summary of the document indicative of the report, even though it may also appear elsewhere in the body of the technical report. If additional space is required, a continuation sheet shall be attached.

It is highly desirable that the abstract of classified reports be unclassified. Each paragraph of the abstract shall end with an indication of the military security classification of the information in the paragraph, represented as *(TS), (S), (C), or (U)*.

There is no limitation on the length of the abstract. However, the suggested length is from 150 to 225 words.

14. KEY WORDS: Key words are technically meaningful terms or short phrases that characterize a report and may be used as index entries for cataloging the report. Key words must be selected so that no security classification is required. Identifiers, such as equipment model designation, trade name, military project code name, geographic location, may be used as key words but will be followed by an indication of technical context. The assignment of links, rules, and weights is optional.

UNCLASSIFIED
Security Classification