AD 653451

U.S. Naval Air Development Center

Johnsville, Pennsylvania

NADC-MR-6618 23 May 1967

A Technique for Determining an Index of Visual Alertness from the Electroencephalogram

Naval Air Systems Command
AirTask R360 FR 102/2021/R01 101 01
(RF-5-01)

DISTRIBUTION OF THIS DOCUMENT IS UNLIMITED

ARCHIVE COPY

DDC
RECEIVED
JUN 22 1967
A

Limitations concerning the distribution of this report and revelation of its contents appear on the inside of this cover.

DEPARTMENT OF THE NAVY
U. S. NAVAL AIR DEVELOPMENT CENTER
JOHNSVILLE
WARMINSTER, PA. 18974

Aerospace Medical Research Department

NADC-MR-6618 23 May 1967

A Technique for Determining an Index of Visual Alertness from the Electroencephalogram

Naval Air Systems Command
AirTask R360 FR 102/2021/R01 101 01
(RF-5-01)

DISTRIBUTION OF THIS DOCUMENT IS UNLIMITED

Prepared by: George E. Bergey
William C. Sipple
William A. Hamilton
Russell D. Squires, M.D.

Approved by: Carl F. Schmidt, M.D.
Research Director
Aerospace Medical Research Department

Released by: E. M. Wurzel, CAPT, MC, USN
Director
Aerospace Medical Research Department

SUMMARY

This is a progress report describing a technique for evaluating the visual alertness of humans. This technique utilizes a transistorized EEG analyzer consisting of an automatic signal level control, a number of paralleled active bandpass filters, and a switching arrangement to allow modification of bandpass characteristics by the user. The output of the analyzer consists of four D.C. signals, the voltage of each being proportional to the EEG activity within the variable frequency bands selected by the experimenter. This evaluation of visual alertness involves monitoring these four analyzer outputs while the subject performs a routine designed to provide alpha suppression.

TABLE OF CONTENTS

	Page
SUMMARY	ii
INTRODUCTION	1
DESCRIPTION OF EQUIPMENT	1
PROCEDURE	10
DISCUSSION	14
REFERENCES	19

LIST OF FIGURES

Figure	Title	Page
1	Front panel of EEG frequency analyzer	3
2	Rear view of analyzer	4
3	Block diagram of frequency analyzer	5
4	Automatic signal level control	6
5	Bandpass filter	7
6	Bandpass characteristics of the EEG analyzer	9
7	Chart recording showing continuous monitoring of the four output channels of the analyzer	11
8	Similar chart recording	12
9	Average value of each of the four outputs of the EEG frequency analyzer at the end of twenty 60-second intervals.	13
10	Histograms showing the same data as shown in Figure 9 after normalization.	15
11	Bandpass characteristics of two paralleled filters	16
12	Output level vs. input amplitude at three different frequencies for a bandpass filter.	17

INTRODUCTION

Since the discovery in 1870 by Richard Caton (5) of electrical activity originating in the exposed brain of a dog, and Hans Berger's (3) studies of similar voltages present on the scalp of man in 1928, a variety of attempts have been made to extract meaningful information from this electrical activity. The apparently warranted assumption which must be made before undertaking any method of analysis, from simple subjective interpretation to complex computer analysis, is that some correlation exists between the electroencephalogram (EEG) and the activity of the brain from which it is being recorded.

A number of previous investigators have correlated certain characteristics of the human EEG to the degree of alertness or visual attention exhibited by a subject (4, 13). The authors have had need, during the course of certain experiments, to evaluate this alertness parameter and have devised the system described in this report to assist in the analysis of the EEG. This analyzer utilizes a number of sharply-tuned active bandpass filters to separate the EEG waveform into its sinusoidal components within a number of frequency bands generally considered to be physiologically significant in terms of having some correlation to the previously mentioned index of alertness. Several methods of employing frequency analysis techniques to the human EEG have been developed, including certain optico-mechanical systems (6, 7), tuned mechanical resonator systems (2, 12), electrical bandpass filters (1), an FM discriminator system (10), and a number of methods whose complexity necessitates the use of digital computers (9, 11). The device described herein is somewhat similar in some respects to the analyzer described by Baldock and Walter (1) in 1946, however some of the limitations of this earlier device have been eliminated. The Walter analyzer performs a frequency analysis of the EEG during consecutive ten-second time intervals, with integration during these time segments producing a voltage proportional to the average EEG amplitude with the frequency bands being monitored. As with any bandpass filtering system, since amplitude variations are reflected in the analysis, the experimenter cannot determine by measurement of the output voltage exactly to what extent frequency and/or amplitude varied during each ten-second interval. That is, a relatively short burst of high amplitude EEG at a given frequency might result in the same output as a longer train of either lower amplitude waves of the same frequency or waves of a different amplitude and slightly different frequency. With the Walter analyzer, phase relationships between changes in EEG content cannot be determined; no information is given as to exactly what moment during each of the ten-second intervals EEG variations occurred. Physically, the analyzer described in this report has the advantage of being entirely of solid-state design, making it considerably lighter and more compact than earlier units.

DESCRIPTION OF EQUIPMENT

This EEG analyzer is relatively simple and inexpensive, portable, and capable of being operated by a discriminator of an FM telemetry system, thereby eliminating the need for any restraining wires connecting the subject to the unit. Of course, if on-line monitoring capabilities are not required, tape-recorded EEG signals can be analyzed.

The analyzer, shown in Figures 1 and 2 is best described in three sections following the block diagram of Figure 3.

The EEG signal being analyzed first enters an automatic signal level control, see Figure 4. The signal level control consists of a Darlington network, Q_1, Q_2, to provide the analyzer with a high input impedance, thus minimizing loading effects. The signal then enters the first of two cascaded operational amplifiers, A_1, A_2. In the feedback loop of amplifier A_1 is a light-dependent resistor, so that the gain of A_1 is dependent upon the light incident on this variable resistor. The lamp providing the varying intensity light for this photosensitive resistor is driven by a direct-coupled transistor pair, Q_3, Q_4, with changes in the base voltage of Q_3 causing variations in the voltage across the lamp. The higher the amplitude of the input signal, the brighter the lamp glows, thus lowering the resistance of the "Ray Signal" resistor and decreasing the voltage gain of amplifier A_1. The output of A_2, in phase with the input signal, does not exceed an amplitude of 5 volts peak-to-peak with input signal level variations from ten to one thousand millivolts.

The output of A_2, which is the EEG modified so that the overall amplitude of the waveform is a constant 5 volts peak-to-peak, is then connected to a number of paralleled bandpass filters of the type shown in Figure 5 which separate the modified EEG waveform into its sinusoidal components. These active filters employ two direct-coupled transistors, Q_1, Q_2. Positive feedback from the emitter of Q_2 is fed through an R-C parallel-T phase shifting network consisting of R_1 and R_2 ganged, and C_1 and C_2. For the circuit shown in Figure 5, $C_1 = C_2 = C_3 = 3/f_c$ where C is expressed in microfarads and f_c is the desired center frequency of the filter in hertz. Adjustment of R_1, R_2 varies this frequency. In order to minimize changes in the Q and center frequency of the filters with temperature fluctuations, C_1, C_2, C_3 must be of a low temperature coefficient type such as General Electric metallized polycarbonate capacitors. Ambient temperature should be kept relatively constant ($\pm 5^{\circ}$F.) to ensure stability. Silicon diodes D_1 and D_2 act to effectively narrow the bandwidth of the bandpass filter. Since there is a constant voltage drop across each diode of approximately 0.6 volt, no output voltage will be present until the filter passes at least a 1.2 volt peak-to-peak signal. Diodes D_3, D_4 rectify the passed signal, resulting in a D. C. output, the voltage of which is proportional to the EEG activity within the bandpass of the filter. The 5 kilohm variable resistor in series with the supply voltage is used to adjust the gain of the transistor pair. For maximum selectivity it should be adjusted for the maximum possible gain without causing the circuit to break into oscillation. The 50 kilohm input voltage-dividing potentiometer should be used to adjust all filters of equal D. C. output at their individual tuned center frequencies for an equal amplitude sinusoidal input signal.

The time constant of each filter is approximately 5 cycles per hertz for full output at the tuned center frequency. Therefore, the maximum delay occurs in the one hertz bandpass where that filter will show full output five seconds after the occurrence of one hertz EEG activity. Some phase distortion is therefore introduced by these filters; e.g., a simultaneous burst of 10 hertz and 20 hertz EEG activity will be indicated in the corresponding output channels with a delay of $\frac{5 \text{ cycles}}{10 \text{ hertz}} = 0.5$ seconds for the 10 hertz burst and 0.25 seconds for the 20 hertz

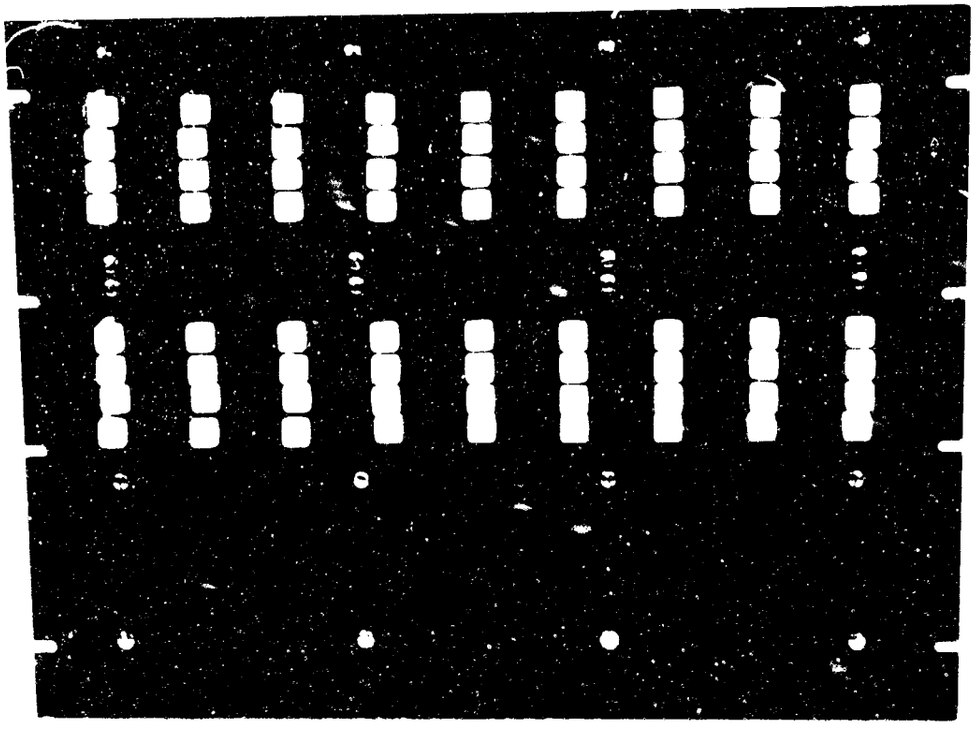

Figure 1. Front panel of EEG frequency analyzer showing push-button switches which allow the experimenter to switch any number of narrow bandpass filters into one or more of four readout channels.

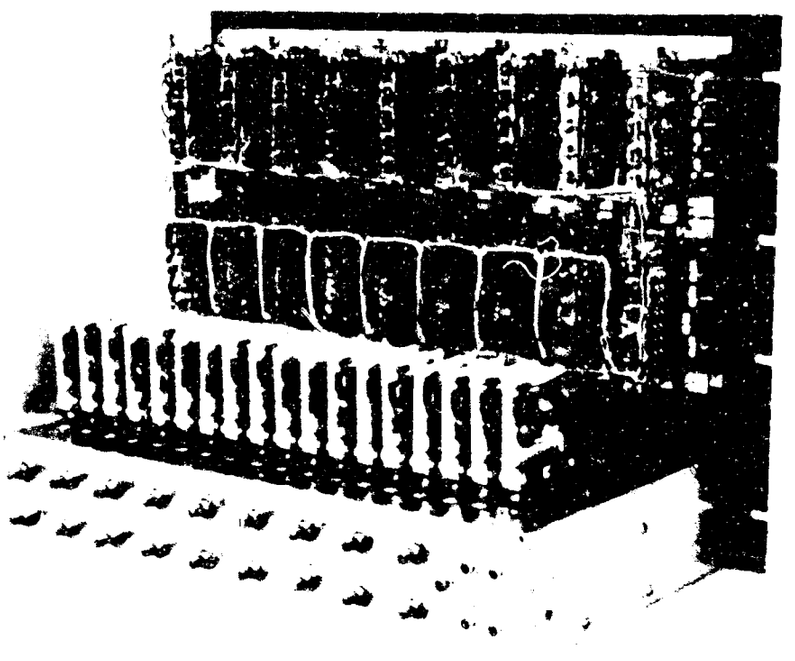

Figure 2. Rear view of analyzer showing eighteen interchangeable bandpass filters, each tuned to a different center frequency.

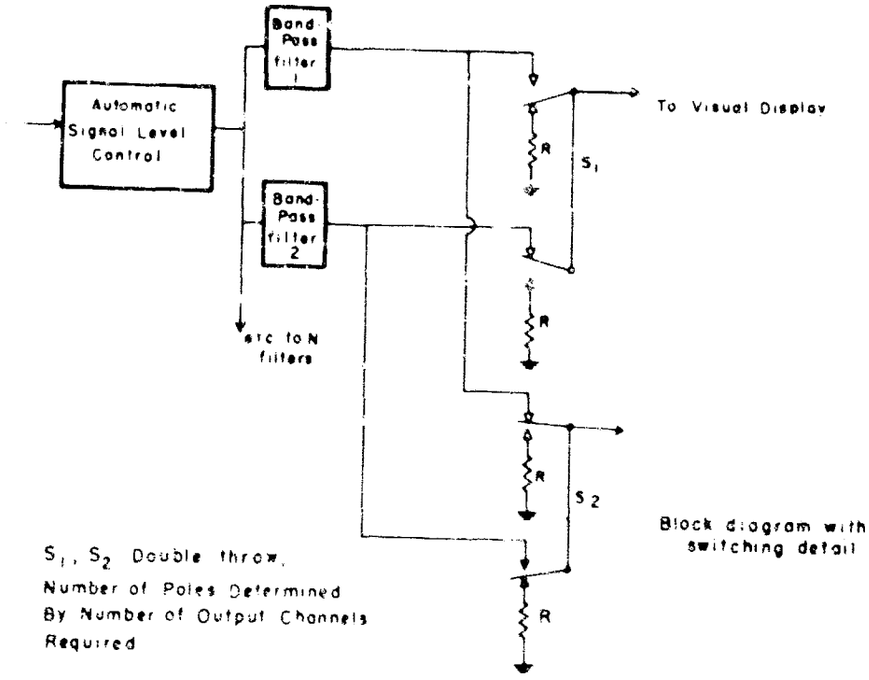

Figure 3. Block diagram of frequency analyzer. For the analyzer described herein, N=18, and the switches have four poles.

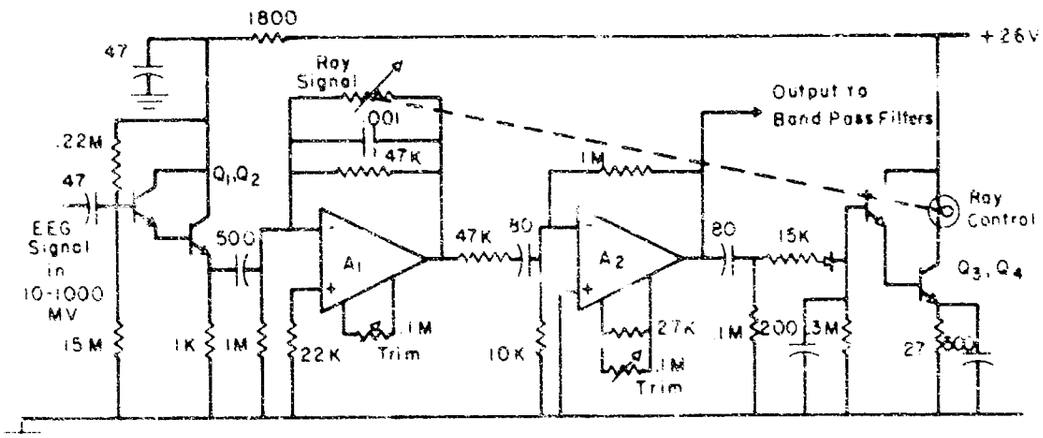

AUTOMATIC SIGNAL LEVEL CONTROL

A_1, A_2 Philbrick PP65AU
Ray Raytheon Rayistor 1112P
Q_1, Q_2 RCA 2N2102
Q_3, Q_4 RCA 2N3878

Resistance in Ohms
Capacitance in Microfarads
+ and - 15VDC required for A_1, A_2

Figure 4. Automatic signal level control which produces an output of 5.0 v p-p regardless of input amplitude variations from 10 to 1000 millivolts.

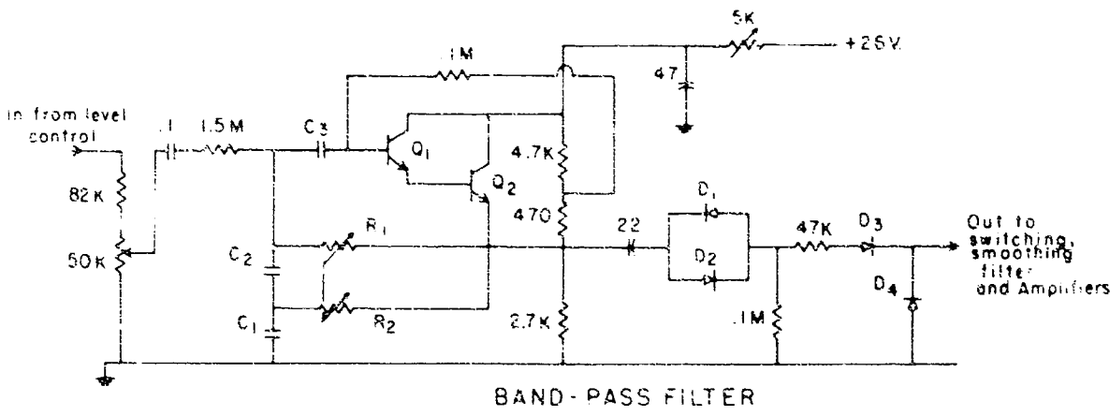

R_1, R_2 25K Dual
C_1, C_2, C_3 Value depends on Center frequency
D_1, D_2 1N458
D_3, D_4 1N294
Q_1, Q_2 2N2712

Resistance in Ohms
Capacitance in Microfarads

Figure 5. Bandpass filter. The direct current output varies proportionally with EEG activity within a preselected bandpass of less than one hertz.

burst. Hence, although the bursts occurred at precisely the same time, the outputs of the analyzer will indicate a time difference of 0.5 - 0.25 = 0.25 seconds in their occurrence. This phase lag will probably be insignificant for even the most critical of users. Also, random noise will not significantly affect the outputs of the filters since each filter requires five cycles of signal at its tuned frequency before maximum D. C. output is attained.

The "comb-filtering" effect produced by the paralleled narrow bandpass filters also enhances the noise-cancelling properties of the analyzer (8).

Any number of these individual one hertz filters can be paralleled to examine the EEG spectrum as desired. The analyzer being discussed utilizes eighteen such filters, each tuned to a different center frequency and wired on an individual circuit board so as to allow interchangeability and future additions or deletions of specific frequencies (Fig. 2).

These D. C. outputs could be monitored individually, however this analyzer uses a series of push-button switches, (Fig. 3) mounted on the front panel of the unit (Fig. 1) which allow the experimenter to combine any filter or number of filters into one or more of four output channels. The appropriate filters are generally switched so that the EEG would be filtered into the four frequency bands accepted as being physiologically and psychologically significant; i.e., the outputs of the six bandpass filters in the 10-12 hertz band are paralleled to one of the four output channels which is classically labelled the alpha band. Similarly, other filters are switched so as to analyze EEG activity within bands of 0.5 - 4 hertz, 5 - 7 hertz, and 19 - 30 hertz, correspondingly labelled the delta, theta, and beta bands (Fig. 6). This switching arrangement provides flexibility in selecting the bandwidths of these four bands.

Displaying these D. C. outputs on a chart recorder enables the experimenter to read out EEG data at a much slower speed than the 25 mm/sec speed required for adequate resolution of the unprocessed EEG signal, thereby providing the opportunity to visually inspect changes in the frequency content of the EEG over relatively long periods of time. This slower chart speed also enables the experimenter to compare EEG activity with simultaneously-recorded EKG, respiration, GSR, blood pressure and other data which are inherently more meaningful when displayed at speeds slower than is necessary for resolution of unprocessed EEG.

For the aforementioned purpose of evaluating alertness, the authors found it convenient to further analyze these D. C. outputs. A Pace TR-10 analog computer has been successfully used to continuously calculate the average value of the output voltage of each of the four output channels described above. The computer performs the operation:

$$Av = \frac{1}{t_n - t_{n-1}} \int_{t_{n-1}}^{t_n} v(t)\,dt$$

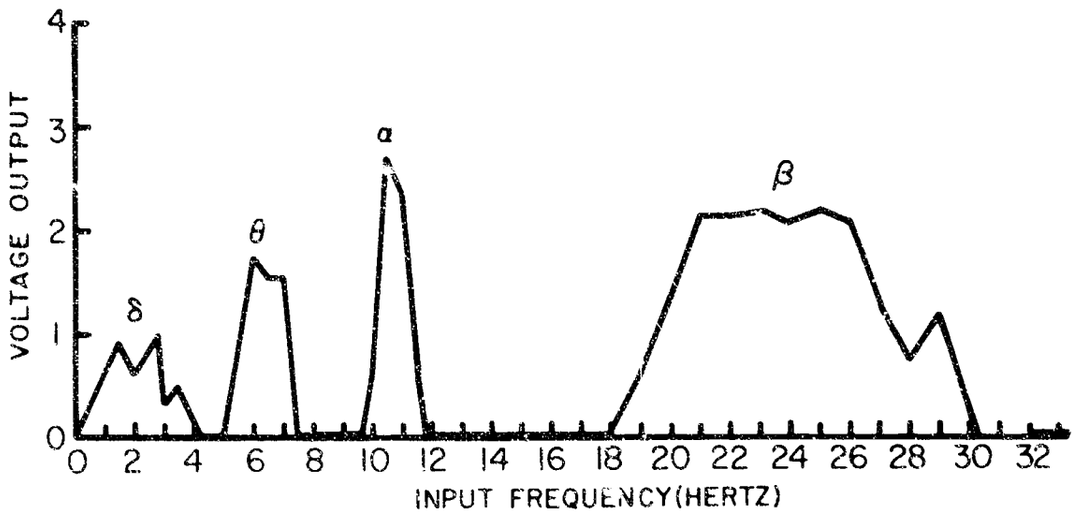

Figure 6. Bandpass characteristics of the EEG analyzer showing the four bandpasses utilized in most experimentation. The input voltage for this graph is sinusoidal, held at 5 volts peak-to-peak by the automatic signal level control.

Where: $v(t)$ = the varying D. C. output of any one channel of the analyzer

$t_n - t_{n-1}$ = the time interval during which the average voltage level is being computed

Av = the average value of $v(t)$ over this interval

Use of this additional averaging process does not necessarily introduce the drawbacks associated with the Walter analyzer (1) previously mentioned; i.e., within the epoch of time $t_n - t_{n-1}$ information about trains of EEG waves is retained since this averaging process is continuous. The phase distortion introduced by averaging is insignificant compared to that introduced by the bandpass filters themselves because of the narrower range of frequencies involved; that is, the frequency of the oscillations in the D. C. output of the filters does not cover as wide a range as does the EEG input to the filters. Also, this averaging process can be performed simultaneously with the direct readout of the filtering analyzer so that phase relationship can be more precisely determined by observing this direct readout while the average D. C. level of each of the four output voltages over some period of time is continuously calculated by the analog computer throughout the interval.

PROCEDURE

The following technique is used by the authors, using the equipment described above, to evaluate the visual alertness of a subject over a twenty-minute period of time.

The subject, whose EEG is generally telemetered to the above analyzing equipment, is first instructed to close his eyes and relax as completely as possible for a sixty-second interval. Immediately following this interval, he is told to open his eyes and, for another sixty-second interval, to stare as intently as possible at an oscilloscope on which is displayed the D. C. output of the alpha band of filter unit. The greater the effort expended by the subject in concentrating on his alpha trace, the greater the degree of alpha suppression and the lower the trace becomes. The technique of using an oscilloscope provides a feedback loop to the subject, permitting him to evaluate his own "visual concentration level" and it was found, generally induces a greater degree of alpha suppression than intent concentration on, for example, some static target.

This entire routine consists of twenty consecutive sixty-second ($t_n - t_{n-1} = 60$ seconds) intervals with alternate intervals of the relaxing and staring procedure described previously. Figures 7 and 8 show typical continuous outputs of the frequency analyzer before being fed into the computer for calculation of the average values. Figure 9 was constructed from the average output level as computed by the analog computer at the end of each sixty-second interval only so that in this graph, information about phase relationships during each interval is lost, although the actual computer output showed continuous average values.

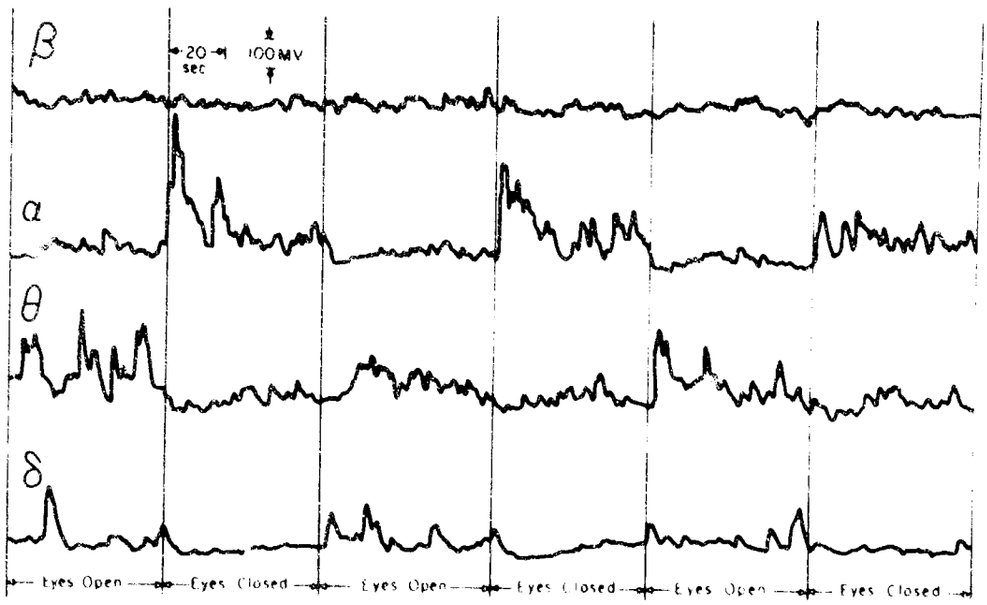

Figure 7. Chart recording showing continuous monitoring of the four output channels of the analyzer during part of the eyes open/closed routine as described in the text. The graph in Figure 9 shows the result of computation, by an analog computer of the average voltage of the four outputs during similar intervals in another experiment.

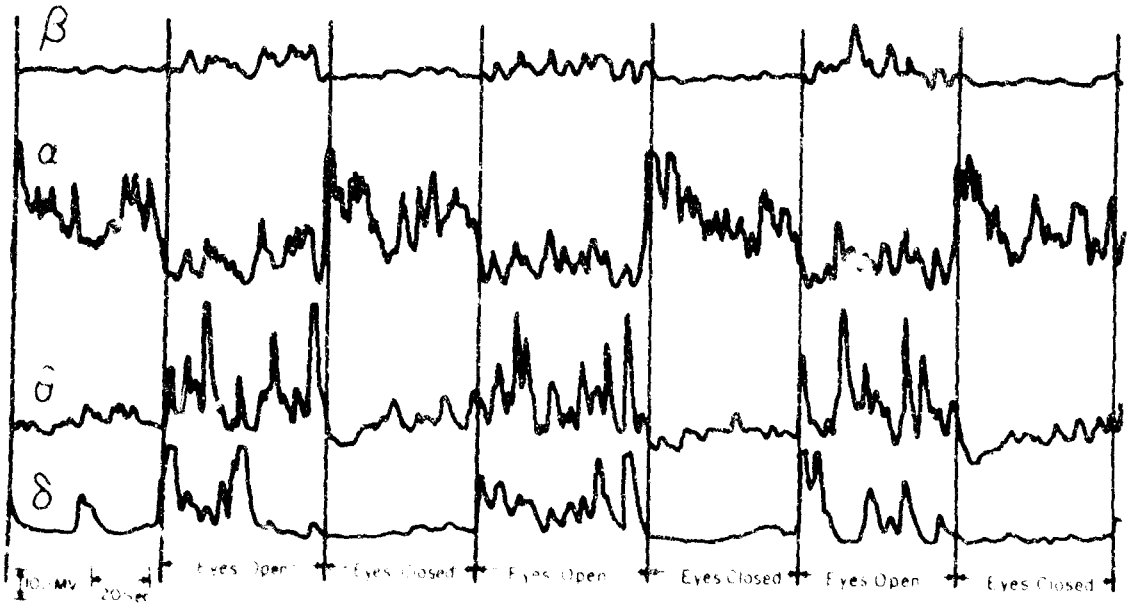

Figure 8. Similar chart r ording made with another subject performing the same eyes open/closed routine. Notice the inc eased changes in beta activity compared with Figure 7.

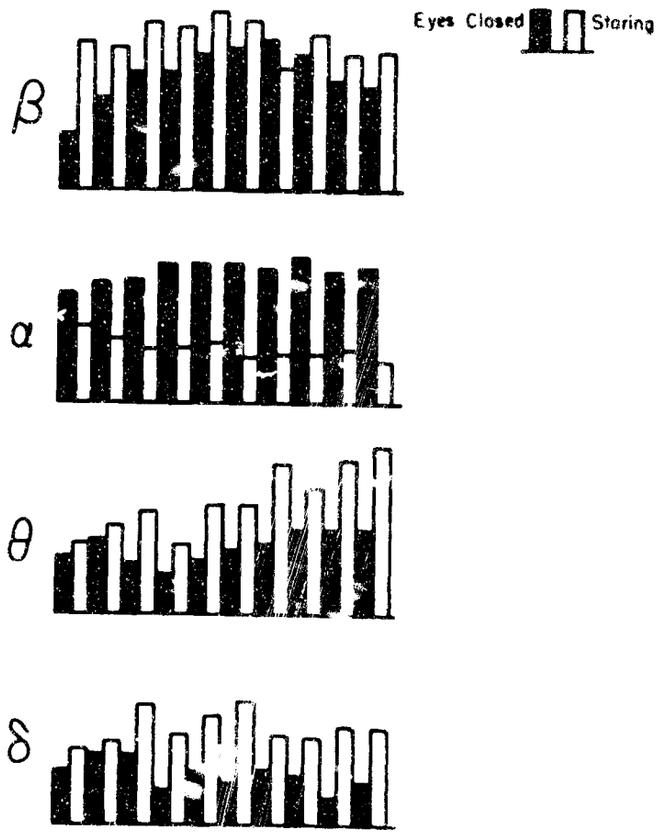

Figure 9. Average value of each of the four outputs of the EEG frequency analyzer at the end of twenty 60-second intervals. During alternate intervals, the subject was instructed to close his eyes, relaxing as completely as possible; and then to open his eyes, concentrating intently on a bargraph oscilloscope on which was displayed the output of the analyzer's α channel. Bandpasses for this experiment are as shown in Figure 6.

The meaning of the absolute value of each bar of the graph of Figure 9 is, at best, obscure; this value being influenced to some extent by electrode contact, slight offset of the averaging computer bias, and an indeterminate combination of EEG amplitudes within a certain bandpass. For the stated purpose of evaluating visual alertness, the authors found it more convenient to interpret this output data if it were first linearly normalized; that is, in terms of the graph of Figure 9, the value of the shortest bar in any particular bandpass is subtracted from every bar in that graph. This effectively sets equal to zero the shortest bar in that bandpass. The highest bar is then arbitrarily set equal to one hundred and of course all other bars are then considered to have a value between 0 and 100. Each of the four histograms, one for each bandpass, is then redrawn so that this arbitrary 0 to 100 ordinate scale is the same height for each graph.

Figure 10 shows the same data of Figure 9 after normalization as described above. As can be seen from the graphs in Figure 10, this normalization process emphasizes changes in average EEG activity from the eyes-closed to the eyes-open state. These changes between states proved to be the most informative index of alertness, rather than the absolute value of the average, hence this normalization is justified. The reader is reminded that the 0 to 100 scale is arbitrary and represents different amounts of relative activity for each of the four bandpasses.

DISCUSSION

The device described in this report should not be construed as being capable of performing a precise frequency analysis of the EEG, but rather as an instrument which has proven valuable in the evaluation of visual alertness. Empirically, it was found that this type of evaluation of the EEG could be performed without the need for the larger, more complicated, and more expensive data processing equipment necessary for a more precise frequency analysis, although the authors do have such equipment available when particular situations require a more precise analysis.

Each of the three sections of this analyzer, the signal level control the bandpass filters and the switching arrangement, contribute some errors which cause the output of the analyzer to differ somewhat from the more precise output of conventional passive RLC bandpass filters, and the limitations on output precision thus imposed should be evaluated by prospective users of this equipment before this unit is used to analyze EEG.

The automatic signal level control, by its very nature, theoretically introduces harmonic distortion. The bandpass filters do not actually analyze the EEG but rather the EEG signal as modified by this level control. This device was incorporated into the analyzer to limit the dynamic range of the amplitude of the signal entering the input of the bandpass filters, thus minimizing the effects shown in Figures 11 and 12. Also, this automatic level control minimizes variations in EEG amplitude due to differences in electrode contact, an effect

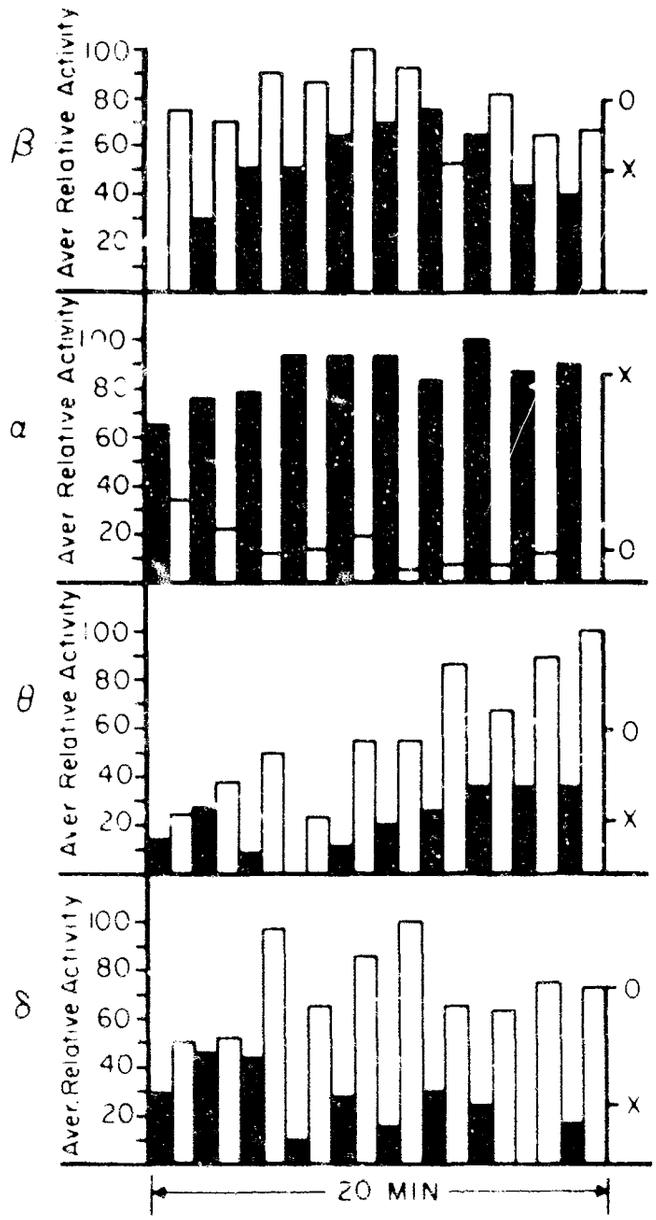

Figure 10. Histograms showing the same data as shown in Figure 9 after normalization. (See text).

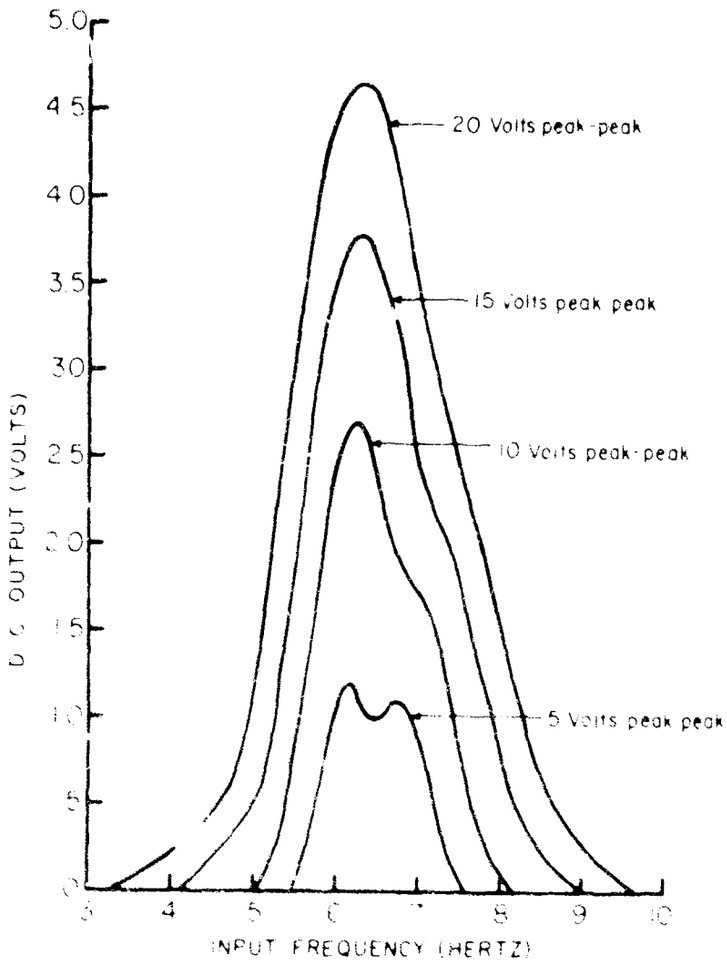

Figure 11. Bandpass characteristics of two paralleled filters. The automatic signal level control was bypassed and the input voltage varied from 5 to 20 volts peak-to-peak.

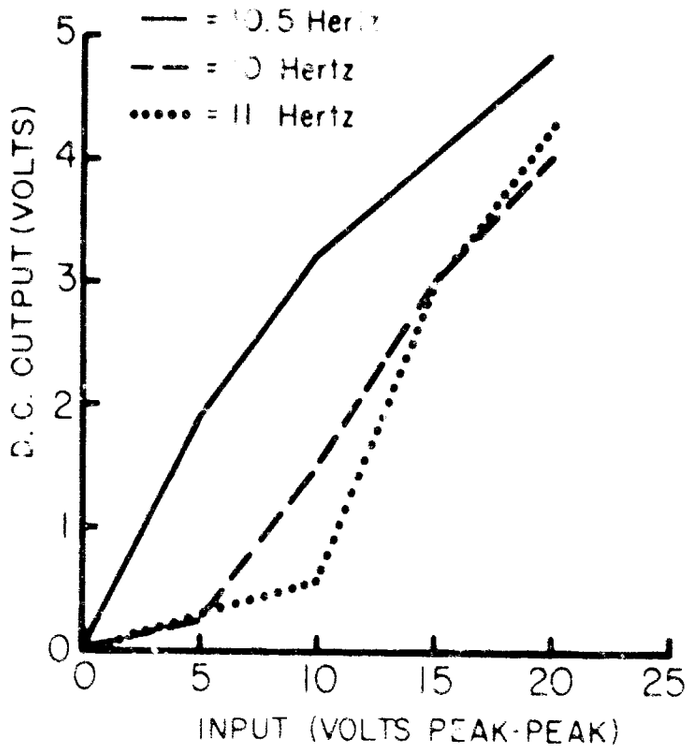

Figure 12. Output level vs. input amplitude at three different frequencies for a bandpass filter tuned to 10.5 hertz. Note the increased selectivity at the 5 volts peak-to-peak input amplitude point. The signal level control was, of course, bypassed to plot this graph.

which is difficult to avoid when a number of different subjects are involved in a particular experiment. If the input signal were purely sinusoidal, the output of the analyzer would be as shown in Figure 6 regardless of input amplitude variations from 10 to 1000 millivolts peak-to-peak. The EEG waveform, however, is not sinusoidal and hence can be considered to be the sum of a number of sinusoids of different amplitude and frequencies. This is not to say that the EEG actually originates in the brain as the sum of pure sinusoids, but rather that an equivalent waveform can be synthesized in this manner. The automatic signal level control of this analyzer maintains only the overall amplitude of the complex waveform at a constant (5 volts peak-to-peak) amplitude; the amplitudes of any harmonic sinusoids of amplitude less than that of the overall waveform cannot be controlled by this device. Hence variations in harmonic amplitudes are reflected in the output of the corresponding bandpass filters.

The filters, while extremely compact, simple, and inexpensive, have the disadvantage of being non-linear as shown in Figure 12.

The switching arrangement, although adding ease of operation and flexibility to the analyzer, results in an output as shown in Figures 6 and 11 when a number of filter outputs are paralleled as described earlier. This transfer function is rather unorthodox when compared with that of a system utilizing a single, standard, RLC filter to filter the bandpasses shown.

All of the "drawbacks" of this analyzer mentioned above can be considered disadvantages only in that they cause this analyzer to differ from standard RLC filters, and yet this device has proven capable of producing meaningful data. It is difficult to say, when dealing with a waveform as complex as this irregular potential of yet unknown origin, whether or not one is more justified in using conventional filtering techniques than in subjecting the EEG to analysis with the analyzer described in this report. In any case, this analyzer has empirically proven useful in evaluating the visual alertness of human subjects.

REFERENCES

1. Baldock, G. R. and W. G. Walter. A new electronic analyzer. Electronic Eng. 18: 339-342, 1946.

2. Barbour, J. An automatic low frequency analyzer. Rev. Sci. Instr. 18: 516-522, 1947.

3. Berger, H. Über das elektrenkephalogramm des menschen. Arch. Psychiat. 87: 527-570, 1929.

4. Brazier, M. A. B. The electrical activity of the nervous system. MacMillan, New York, 1953.

5. Caton, R. The electric currents of the brain. Brit. Med. J. 2: 278, 1875.

6. Cohn, R. A cycloscopic study of the human electroencephalogram. J. Gen. Physiol. 25 (4): 517-522, 1942.

7. Grass, A. M. and F. A. Gibbs. A fourier transform of the electroencephalogram. J. Neurophysiol. 1 (6): 521-526, 1938.

8. Kyle, J. Selective audio amplifiers. Electronics World 74 (1): 84-88, 1965.

9. Ormsby, J. F. A. Design of numerical filters with applications to missile data processing. J. Assoc. Comp. Mach. 8 (4): 440-466, 1961.

10. Riehl, J. L. Analog analysis of EEG activity. Aerospace Med. 32 (12): 1101-1108, 1961.

11. Walter, D. O., J. M. Rhodes, D. Brown, and W. R. Adey. Comprehensive spectral analysis of human EEG generators in posterior cerebral regions. Electroenceph. Clin. Neurophysiol. 20: 224-237, 1966.

12. Walter, W. G. Electronic Eng. XVI, 9, 1943.

13. Handbook of Physiology, Vol. I. Neurophysiology. American Physiological Society, Washington, D. C., 1959.

UNCLASSIFIED
Security Classification

DOCUMENT CONTROL DATA - R&D

(Security classification of title, body of abstract and indexing annotation must be entered when the overall report is classified)

1. ORIGINATING ACTIVITY *(Corporate author)*

Aerospace Medical Research Department
U. S. Naval Air Development Center,
Johnsville, Warminster, Pa.

2a. REPORT SECURITY CLASSIFICATION

Unclassified

2b. GROUP

3. REPORT TITLE

A Technique for Determining an Index of Visual Alertness from the Electroencephalogram

4. DESCRIPTIVE NOTES *(Type of report and inclusive dates)*

Phase Report

5. AUTHOR(S) *(Last name, first name, initial)*

Bergey, George E.
Sipple, William C.
Hamilton, William A.
Squires, Russell D.

6. REPORT DATE

23 May 1967

7a. TOTAL NO. OF PAGES

19

7b. NO. OF REFS

13

8a. CONTRACT OR GRANT NO.

b. PROJECT NO.

AirTask R360 FR 102/2021/R01 101 01

c. (RF-5-01)

d.

9a. ORIGINATOR'S REPORT NUMBER(S)

NADC-MR-6618

9b. OTHER REPORT NO(S) *(Any other numbers that may be assigned this report)*

10. AVAILABILITY/LIMITATION NOTICES

Distribution of this Document is Unlimited.

11. SUPPLEMENTARY NOTES

12. SPONSORING MILITARY ACTIVITY

13. ABSTRACT

This is a progress report describing a technique for evaluating the visual alertness of humans. This technique utilizes a transistorized EEG analyzer consisting of an automatic signal level control, a number of paralleled active bandpass filters, and a switching arrangement to allow modification of bandpass characteristics by the user. The output of the analyzer consists of four D.C. signals, the voltage of each being proportional to the EEG activity within the variable frequency bands selected by the experimenter.

This evaluation of visual alertness involves monitoring these four analyzer outputs while the subject performs a routine designed to provide alpha suppression.

DD FORM 1 JAN 64 1473

UNCLASSIFIED
Security Classification

UNCLASSIFIED
Security Classification

14 KEY WORDS	LINK A ROLE	LINK A WT	LINK B ROLE	LINK B WT	LINK C ROLE	LINK C WT
1. Physiology						
2. Electroencephalogram						
3. Frequency Analyzer						
4. Bandpass Filters						
5. Visual Alertness						

INSTRUCTIONS

1. ORIGINATING ACTIVITY: Enter the name and address of the contractor, subcontractor, grantee, Department of Defense activity or other organization *(corporate author)* issuing the report.

2a. REPORT SECURITY CLASSIFICATION: Enter the overall security classification of the report. Indicate whether "Restricted Data" is included. Marking is to be in accordance with appropriate security regulations.

2b. GROUP: Automatic downgrading is specified in DoD Directive 5200.10 and Armed Forces Industrial Manual. Enter the group number. Also, when applicable, show that optional markings have been used for Group 3 and Group 4 as authorized.

3. REPORT TITLE: Enter the complete report title in all capital letters. Titles in all cases should be unclassified. If a meaningful title cannot be selected without classification, show title classification in all capitals in parenthesis immediately following the title.

4. DESCRIPTIVE NOTES: If appropriate, enter the type of report, e.g., interim, progress, summary, annual, or final. Give the inclusive dates when a specific reporting period is covered.

5. AUTHOR(S): Enter the name(s) of author(s) as shown on or in the report. Enter last name, first name, middle initial. If military, show rank and branch of service. The name of the principal author is an absolute minimum requirement.

6. REPORT DATE: Enter the date of the report as day, month, year; or month, year. If more than one date appears on the report, use date of publication.

7a. TOTAL NUMBER OF PAGES: The total page count should follow normal pagination procedures, i.e., enter the number of pages containing information.

7b. NUMBER OF REFERENCES: Enter the total number of references cited in the report.

8a. CONTRACT OR GRANT NUMBER: If appropriate, enter the applicable number of the contract or grant under which the report was written.

8b, 8c, & 8d. PROJECT NUMBER: Enter the appropriate military department identification, such as project number, subproject number, system numbers, task number, etc.

9a. ORIGINATOR'S REPORT NUMBER(S): Enter the official report number by which the document will be identified and controlled by the originating activity. This number must be unique to this report.

9b. OTHER REPORT NUMBER(S): If the report has been assigned any other report numbers *(either by the originator or by the sponsor)*, also enter this number(s).

10. AVAILABILITY/LIMITATION NOTICES: Enter any limitations on further dissemination of the report, other than those imposed by security classification, using standard statements such as:

(1) "Qualified requesters may obtain copies of this report from DDC."

(2) "Foreign announcement and dissemination of this report by DDC is not authorized."

(3) "U. S. Government agencies may obtain copies of this report directly from DDC. Other qualified DDC users shall request through _____."

(4) "U. S. military agencies may obtain copies of this report directly from DDC. Other qualified users shall request through _____."

(5) "All distribution of this report is controlled. Qualified DDC users shall request through _____."

If the report has been furnished to the Office of Technical Services, Department of Commerce, for sale to the public, indicate this fact and enter the price, if known.

11. SUPPLEMENTARY NOTES: Use for additional explanatory notes.

12. SPONSORING MILITARY ACTIVITY: Enter the name of the departmental project office or laboratory sponsoring *(paying for)* the research and development. Include address.

13. ABSTRACT: Enter an abstract giving a brief and factual summary of the document indicative of the report, even though it may also appear elsewhere in the body of the technical report. If additional space is required, a continuation sheet shall be attached.

It is highly desirable that the abstract of classified reports be unclassified. Each paragraph of the abstract shall end with an indication of the military security classification of the information in the paragraph, represented as *(TS), (S), (C), or (U)*.

There is no limitation on the length of the abstract. However, the suggested length is from 150 to 225 words.

14. KEY WORDS: Key words are technically meaningful terms or short phrases that characterize a report and may be used as index entries for cataloging the report. Key words must be selected so that no security classification is required. Identifiers, such as equipment model designation, trade name, military project code name, geographic location, may be used as key words but will be followed by an indication of technical context. The assignment of links, roles, and weights is optional.

DD FORM 1473 (BACK)

UNCLASSIFIED
Security Classification

UNCLASSIFIED

U. S. Naval Air Development Center, Johnsville, Warminster, Pennsylvania
Aerospace Medical Research Department

A Technique for Determining an Index of Visual Alertness from the Electroencephalogram: (U) Phase Report: by George E. Bergey, William C. Sipple, William A. Hamilton and Russell D. Squires, M.D., 19 pp, 23 May 1967.

This is a progress report describing a technique for evaluating the visual alertness of humans. This technique utilizes a transistorized EEG analyzer consisting of an automatic signal level control, a number of paralleled active bandpass filters, and a switching arrangement to allow modification of bandpass characteristics by the user. The output of the analyzer consists of four D.C. signals, the voltage of each being proportional to the EEG activity within the variable frequency bands selected by the experimenter. This evaluation of visual alertness involves monitoring these four analyzer outputs while the subject performs a routine designed to provide alpha suppression.

I. Report NADC-MR-6618
II. AirTask R360 FR102/2021/R01 101 01 (RF-5-01)

1. Physiology
2. Electroencephalogram
3. Frequency Analyzer
4. Bandpass Filters
5. Visual Alertness

UNCLASSIFIED

U. S. Naval Air Development Center, Johnsville, Warminster, Pennsylvania
Aerospace Medical Research Department

A Technique for Determining an Index of Visual Alertness from the Electroencephalogram: (U) Phase Report: by George E. Bergey, William C. Sipple, William A. Hamilton and Russell D. Squires, M.D., 19 pp, 23 May 1967.

This is a progress report describing a technique for evaluating the visual alertness of humans. This technique utilizes a transistorized EEG analyzer consisting of an automatic signal level control, a number of paralleled active bandpass filters, and a switching arrangement to allow modification of bandpass characteristics by the user. The output of the analyzer consists of four D.C. signals, the voltage of each being proportional to the EEG activity within the variable frequency bands selected by the experimenter. This evaluation of visual alertness involves monitoring these four analyzer outputs while the subject performs a routine designed to provide alpha suppression.

I. Report NADC-MR-6618
II. AirTask R360 FR102/2021/R01 101 01 (RF-5-01)

1. Physiology
2. Electroencephalogram
3. Frequency Analyzer
4. Bandpass Filters
5. Visual Alertness

UNCLASSIFIED

U. S. Naval Air Development Center, Johnsville, Warminster, Pennsylvania
Aerospace Medical Research Department

A Technique for Determining an Index of Visual Alertness from the Electroencephalogram: (U) Phase Report: by George E. Bergey, William C. Sipple, William A. Hamilton and Russell D. Squires, M.D., 19 pp, 23 May 1967.

This is a progress report describing a technique for evaluating the visual alertness of humans. This technique utilizes a transistorized EEG analyzer consisting of an automatic signal level control, a number of paralleled active bandpass filters, and a switching arrangement to allow modification of bandpass characteristics by the user. The output of the analyzer consists of four D.C. signals, the voltage of each being proportional to the EEG activity within the variable frequency bands selected by the experimenter. This evaluation of visual alertness involves monitoring these four analyzer outputs while the subject performs a routine designed to provide alpha suppression.

I. Report NADC-MR-6618
II. AirTask R360 FR102/2021/R01 101 01 (RF-5-01)

1. Physiology
2. Electroencephalogram
3. Frequency Analyzer
4. Bandpass Filters
5. Visual Alertness

UNCLASSIFIED

U. S. Naval Air Development Center, Johnsville, Warminster, Pennsylvania
Aerospace Medical Research Department

A Technique for Determining an Index of Visual Alertness from the Electroencephalogram: (U) Phase Report: by George E. Bergey, William C. Sipple, William A. Hamilton and Russell D. Squires, M.D., 19 pp, 23 May 1967.

This is a progress report describing a technique for evaluating the visual alertness of humans. This technique utilizes a transistorized EEG analyzer consisting of an automatic signal level control, a number of paralleled active bandpass filters, and a switching arrangement to allow modification of bandpass characteristics by the user. The output of the analyzer consists of four D.C. signals, the voltage of each being proportional to the EEG activity within the variable frequency bands selected by the experimenter. This evaluation of visual alertness involves monitoring these four analyzer outputs while the subject performs a routine designed to provide alpha suppression.

I. Report NADC-MR-6618
II. AirTask R360 FR102/2021/R01 101 01 (RF-5-01)

1. Physiology
2. Electroencephalogram
3. Frequency Analyzer
4. Bandpass Filters
5. Visual Alertness