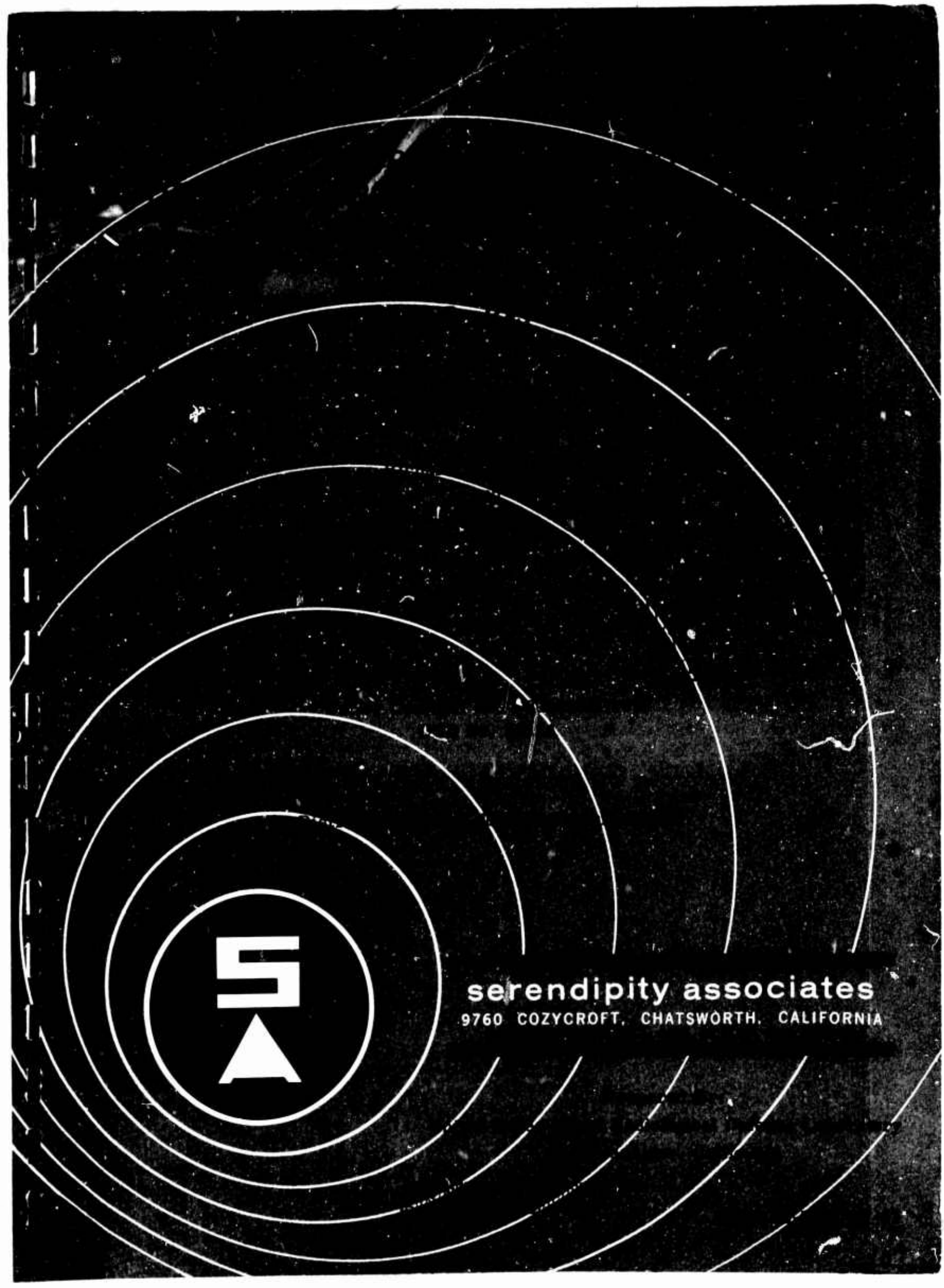
S
serendipity associates
9760 COZYCROFT, CHATSWORTH, CALIFORNIA

TR-44-67-1 (U)

AN OPERATIONAL CONCEPT OF AN EMERGENCY MEDICAL COMMAND AND COMMUNICATIONS SYSTEM

FINAL REPORT

By

Richard E. Shoemaker

and

Barry Korn

February 1967

Prepared for

United States Naval Radiological Defense Laboratory

San Francisco, California

Under Contract No. N0022866C1616

OCD No. 2422A

This report has been reviewed in the Office of Civil Defense and approved for publication. Approval does not signify that the contents necessarily reflect the views and policies of the Office of Civil Defense.

Distribution of this document is unlimited.

SERENDIPITY ASSOCIATES

199 First Street

Los Altos, California

LIST OF FIGURES

Figure No.		Page
1	Examples of Communications Links - San Jose EMCCS	8
2	Existing San Jose EMCCS	9
3	Conceptual EMCCS - Alarm Phase	51
4	Conceptual EMCCS - Operational Phase	55
5	Conceptual EMCCS - Resource Exhaustion Phase	64

LIST OF TABLES

Table No.		Page
1	Factors Influencing Message Frequency	67

TABLE OF CONTENTS

	Page
FOREWORD	vii
ABSTRACT	ix
SUMMARY	xi
INTRODUCTION	1
APPROACH	5
INITIAL INVESTIGATION: SAN JOSE	7
GENERAL OPERATIONAL PARAMETERS	17
Plans	19
System Training and Exercise	23
Central Control of Medical Resources	24
Temporary Medical Centers (TMC)	27
Communications Links	28
Treatment Centers	30
Transportation	30
Support	31
Disaster Operations Commander	32
Backup Requirements	32
DESCRIPTION OF CONCEPTUAL EMCCS	35
System Elements	35
Central Medical Control	36
Treatment Centers	38
Transportation	43
Support Groups	44
Information Types	45

Table of Contents (Continued)

	Page
Information Flow Diagram	49
Alarm Phase	52
Operational Phase	56
Resource Exhaustion Phase	65
Communications Links and Message Frequency Derivation	66
IMPLEMENTATION	77
Disaster Plans	80
Central Control	81
Temporary Medical Care Centers	84
Communications	85
Jurisdictional Problems	90
FUTURE WORK	93
REFERENCES	97

FOREWORD

This report was prepared on Contract N0022866C1616, OCD number 2422A. In June 1966, the Office of Civil Defense, Department of Defense contracted with Serendipity Associates, Los Altos, California to develop an operational concept for emergency medical command and communications that would be effective during the emergency and post-attack period following a nuclear attack. Mr. J. W. Downs and Dr. O. M. Meredith of the United States Navy Radiological Defense Laboratory have successively served as Technical Monitors for the research.

Many people aided the project staff in conducting the study. The time and effort of Mr. Robert Mason, Santa Clara County Communications Director; Mr. Charles Rehling, San Jose Assistant Director of Civil Defense; Mr. Frank Holt, Santa Clara County Operational Area Coordinator; and Dr. Richard Alexander, Chairman of the Santa Clara County Medical Association Disaster Committee are gratefully acknowledged.

ABSTRACT

An operational concept for an Emergency Medical Command and Communications System (EMCCS) is derived from an analysis of natural disaster reports and the anticipated conditions attending a nuclear attack. A conceptual EMCCS model is described in terms of system elements, types of information circulated, communications links and traffic load determinants. A general approach to implementation of an EMCCS is described with a brief discussion of constraints imposed by current commitments and projected changes. The importance of validating the conceptual EMCCS is discussed and future research is suggested.

SUMMARY

Reports on localized natural disasters invaribly reveal serious inadequacies in communications and command of medical resources. The magnitude of casualties which could result from a thermonuclear attack would result in an even greater requirement for an effective emergency medical command and communications system (EMCCS).

This report examines the emergency medical system for the City of San Jose, California and local disaster reports from across the country. Significant similarities and differences between emergency medical organizations are analyzed and general operational parameters are derived. The needs for control of medical resources and coordination with other disaster organizations are found to be essential to an effective EMCCS. Information necessary to effective execution of the control function must be readily available to the medical officer in charge of a field medical care center and to the person(s) responsible for overall direction of the emergency medical response.

Based upon analysis of command, communications and general medical requirements, a conceptual EMCCS concept is formulated which emphasizes centralized control of medical resources. The staff and field elements of the system and the types of information circulated among the elements are defined. Three phases of system operation are suggested and an information flow diagram is presented for each phase. Factors which might affect message frequency are applied to functions and information exchanges to determine expected loads on the system.

This report sets forth basic principles and general functional requirements for an EMCCS. Diversity in kind and number of variables which exist between cities precludes a universally valid and directly applicable EMCCS design. However, it is fully realized that the primary value of the EMCCS concept to the Office of Civil Defense is its ultimate utility.

A general approach toward implementation is suggested which follows from the emphasis upon essential functions and requirements analysis. Each major function group is discussed within the context of probable city commitments and projected changes. Utilization of the Emergency Operations Center for control of emergency medical operations and several plans for establishing temporary care centers are suggested.

The importance of embedding the EMCCS within the normal system is emphasized, and telephones, because of simplicity of operation and user familiarity are preferred for some functions. However, the vulnerability of the telephone to blast effects and the requirement for communications backup indicates the desirability of a special radio frequency for medical communications.

Because of widespread devastation attending a nuclear attack the implication for an EMCCS which covers several cities is discussed with consideration of resulting jurisdictional problems.

Empirical validation of the conceptual EMCCS is suggested within the context of the OCD's continuing emergency operations research program.

INTRODUCTION

The tremendous devastation attending a nuclear attack would, in a heavily populated area, result in an enormous number of injuries. It is important that the finite resources available to local medical officials be utilized such that as many casualties as possible receive appropriate and expeditious treatment. The means for realizing that goal is an effective Emergency Medical Command and Communications System (EMCCS).

Preparation for disaster medical operations by cities are often based upon previous experience. Problems which occur in one disaster are specifically countered in the next. Cities without a recent disaster history are unable to develop an effective EMCCS based upon their own experience. However, there is a great deal that one city can learn from the experiences of others in handling emergency medical operations.

This report is concerned with development of an operational employment concept for a general EMCCS. Integrated field study and research analysis was applied to the problem to define the functional requirements for an EMCCS within a hypothetical nuclear disaster environment. The approach attempts to derive general system requirements which transcend place and circumstance and also to identify the important city parameters which would affect actual EMCCS implementation.

The basis for all current civil defense and disaster planning is the Federal Civil Defense Act of 1950, though civil defense itself is the joint responsibility of federal, state and local governments. The federal government establishes overall programs and priorities, authorizes and conducts research, provides training at federal schools, and administers the civil defense effort on a nationwide basis through eight regional headquarters.

The concern of officials at the federal and state level about maintaining local government in the aftermath of a nuclear attack has resulted in a civil defense organization which gives complete sovereignty to cities for disaster operations. The city has absolute authority for direction of local actions, committing city funds or resources and for requesting mutual aid in the event of a disaster of any proportion and must be viewed as the basic autonomous unit. Higher levels of government or civil defense can assist or intervene only upon request by the city.

The EMCCS, itself, is conceptualized as a subsystem of the larger disaster command and control structure concerned with the coordinated control of a city's resources in coping with all the demands of the nuclear post-attack situation.

To adequately assess system requirements it is necessary to define the proposed operational environment. It had been assumed that data from target damage assessment models would be available from ongoing OCD research studies. In its absence, we can define the environment in qualitative terms only.

By the method of extremes it is possible to bracket the disaster situation which would most likely confront the organized EMCCS. A city which suffers a direct hit by a nuclear weapon would first have few survivors and second, the medical resources themselves (hospitals, personnel, vehicles and supplies) would most likely be lost. The requirement for treating casualities would have to be met by an adjacent city or other agency. At the other extreme is the case in which the object city is untouched by blast damage but would assist adjacent areas which did suffer casualties. Somewhere in the middle is the situation in which a large part of a city is destroyed but some portion of the medical resources can still be mobilized. It is in the area of the last case that we have assumed the operational environment to exist.

Important to any research of this type is its ultimate utility. The value of this report to the OCD is believed to be its potential use as a set of guidelines or a checklist for those concerned with developing or evaluating Emergency Medical Command and Communications Systems.

The scope of the research is limited to the derivation of an EMCCS operational employment based upon functional rather than physical system components. However, in discussing implementation, specific recommendations or alternatives are offered with respect to system elements.

BLANK PAGE

APPROACH

The primary objective of the study is to develop an operational employment concept for an Emergency Medical Command and Communications System within a post-nuclear attack environment. The approach integrates field study and research analysis to develop a set of functional requirements for a general EMCCS.

The scope of research with regard to EMCCS functions is defined in time, as the point at which a disaster situation is reported to the official disaster organization and continuing until normal operations are resumed. Specific functions are those concerned with command and coordination of medical resources such that an optimum operational environment is established for casualty care.

The initial step in the research design was to select an existing city-operated emergency medical command and communications system to serve as an EMCCS prototype. As a consequence of its participation in previous Office of Civil Defense programs, San Jose was expected to have accumulated a large store of relevant information. Another factor which led to the selection of San Jose as a preliminary model was its proximity to the contractor's Los Altos facility.

Data was collected on the San Jose system which established a basic functional framework of emergency medical activities. The system was analyzed and a logic flow diagram was constructed to reveal interactions required between elements. Thus, the San Jose emergency medical command and communications system was modeled in terms of its necessary functions and the resulting information transfer requirements.

Having defined an EMCCS prototype, a blast damage model was to be superimposed on the system to reveal positive and negative aspects of the San Jose system when exposed to a hypothetical nuclear attack environment. An alternative to that approach was taken when it was learned that the damage model would not be ready in time for this report.

An intensive library research effort was conducted to obtain information as to the effectiveness of various emergency medical command and control systems (formal and informal) during actual disaster operations. Major sources of information are outlined below:

1. San Jose local disaster reports
2. Ohio State University Disaster Research Reports
3. American Medical Association, Disaster Medical Care Committee Council on National Security
4. Conferences with Civil Defense and communications officers, hospital and local disaster medical care personnel
5. Conferences with amateur radio groups
6. Disaster symposia
7. Observations of disaster drills

The analysis of those data resulted in a set of design guidelines which reflect the basic requirements for the conceptual EMCCS operational concept.

The analysis continued by defining the major functions of an Emergency Medical Command and Communications system independent of disaster type. Information essential to proper execution of the various functions were determined and categorized into types and sources. Lines of communication were then drawn between system elements which were found to require information exchanges. The approach taken allows formulation of an EMCCS operational concept which is amenable to general application and is not dependent upon the characteristics of a particular city.

INITIAL INVESTIGATION: SAN JOSE

San Jose, California was selected as the original data base for this study. Numerous interviews, field investigations, and document reviews were conducted to develop a functional description of the existing Emergency Medical Command and Communications System. San Jose is integrated within the Santa Clara County Coordinated Ambulance Program, resulting in a combined city-county medical system which operates on a day-to-day basis as well as in the event of a disaster.

The Emergency Medical Command and Communications System, as currently organized for the city of San Jose, is described in the following schematic and functional diagrams. Consideration of salient system characteristics are discussed in terms of their estimated effectiveness in accomplishing the medical objectives.

Major system functions are command, communications, data handling, transportation, and medical treatment, and each is discussed below. Functional titles are presented in capital letters and correspond to those used in the diagram. Abbreviations above the functions indicate the person/group performing the function.

Upon receiving initial notification of the existence of a disaster, the San Jose Emergency Operations Center (EOC) dispatches appropriate fire and police units which TRAVEL TO DISASTER SCENE. The first ranking officer (of either service) to arrive at the scene will

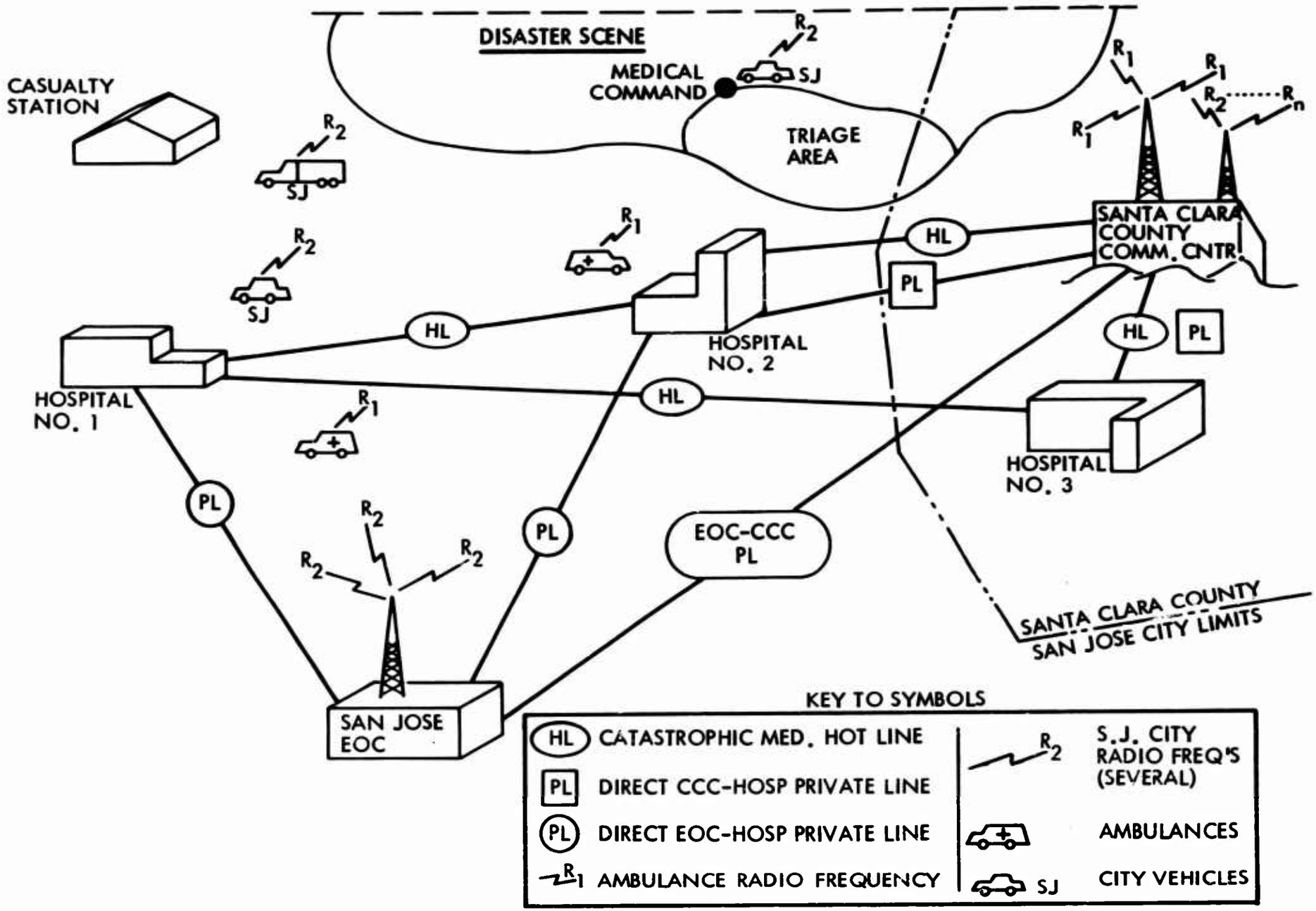

FIGURE 1. EXAMPLES OF COMMUNICATION LINKS – SAN JOSE EMCCS

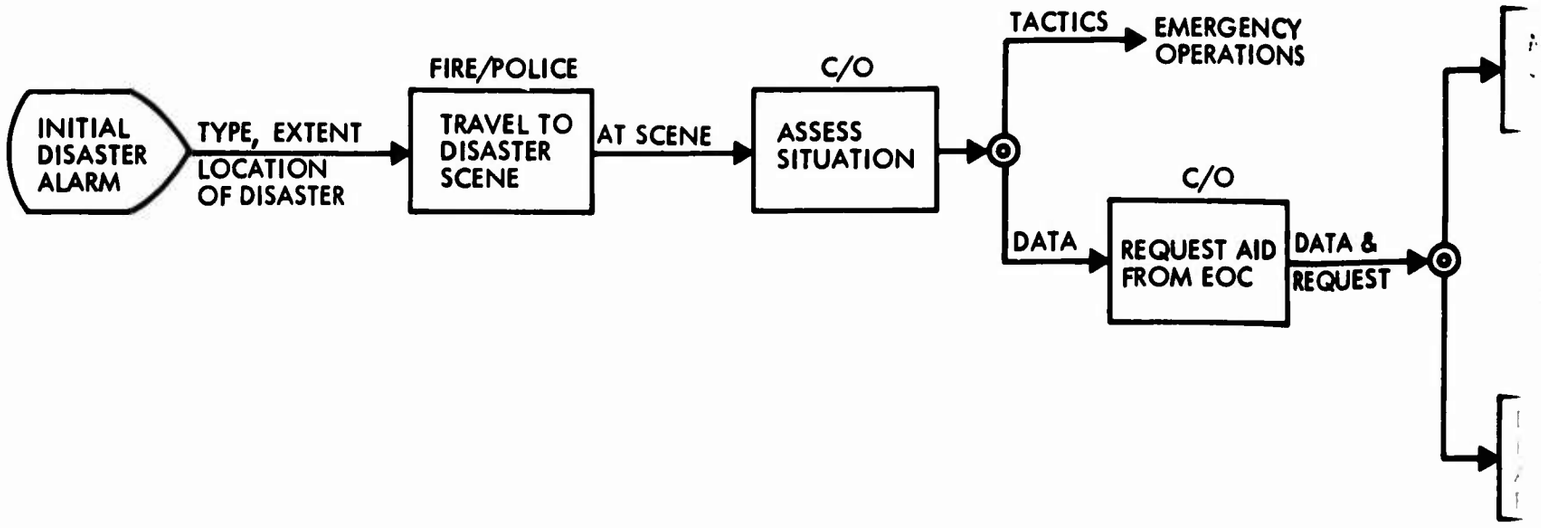
INITIAL DISASTER ALARM
TYPE, EXTENT
LOCATION OF DISASTER
FIRE/POLICE
TRAVEL TO DISASTER SCENE
AT SCENE
C/O
ASSESS SITUATION
TACTICS
EMERGENCY OPERATIONS
DATA
C/O
REQUEST AID FROM EOC
DATA & REQUEST

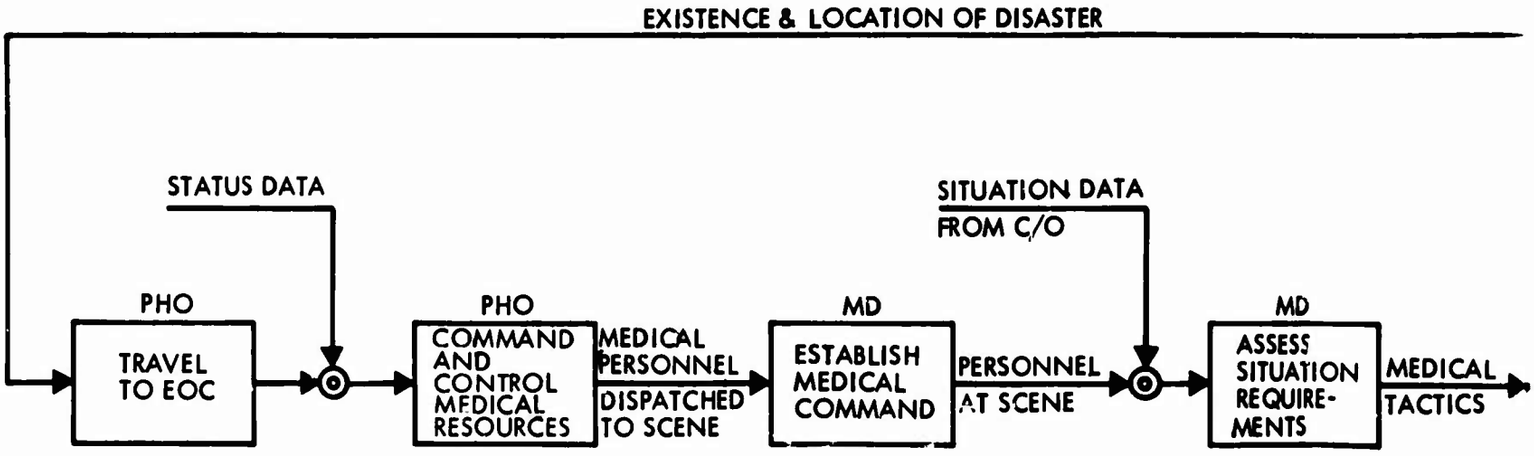
EXISTENCE & LOCATION OF DISASTER
STATUS DATA
PHO
TRAVEL TO EOC
PHO
COMMAND AND CONTROL MEDICAL RESOURCES
MEDICAL PERSONNEL
DISPATCHED TO SCENE
MD
ESTABLISH MEDICAL COMMAND
PERSONNEL
AT SCENE
SITUATION DATA
FROM C/O
MD
ASSESS SITUATION REQUIRE-MENTS
MEDICAL
TACTICS

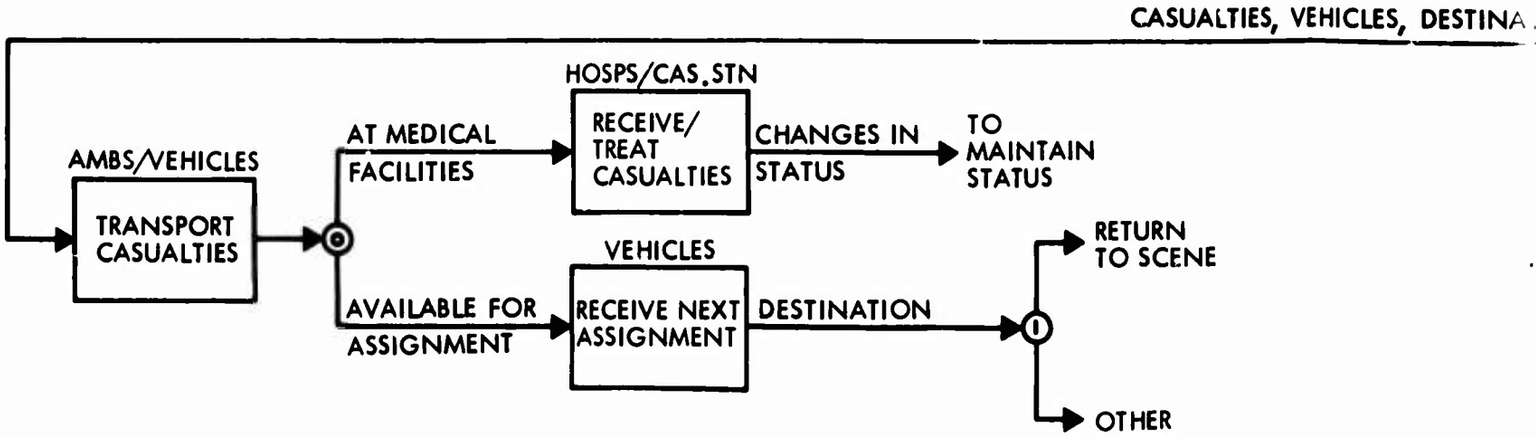
CASUALTIES, VEHICLES, DESTINA
AMBS/VEHICLES
TRANSPORT CASUALTIES
AT MEDICAL
FACILITIES
HOSPS/CAS.STN
RECEIVE/ TREAT CASUALTIES
CHANGES IN
STATUS
TO MAINTAIN STATUS
AVAILABLE FOR
ASSIGNMENT
VEHICLES
RECEIVE NEXT ASSIGNMENT
DESTINATION
RETURN TO SCENE
OTHER

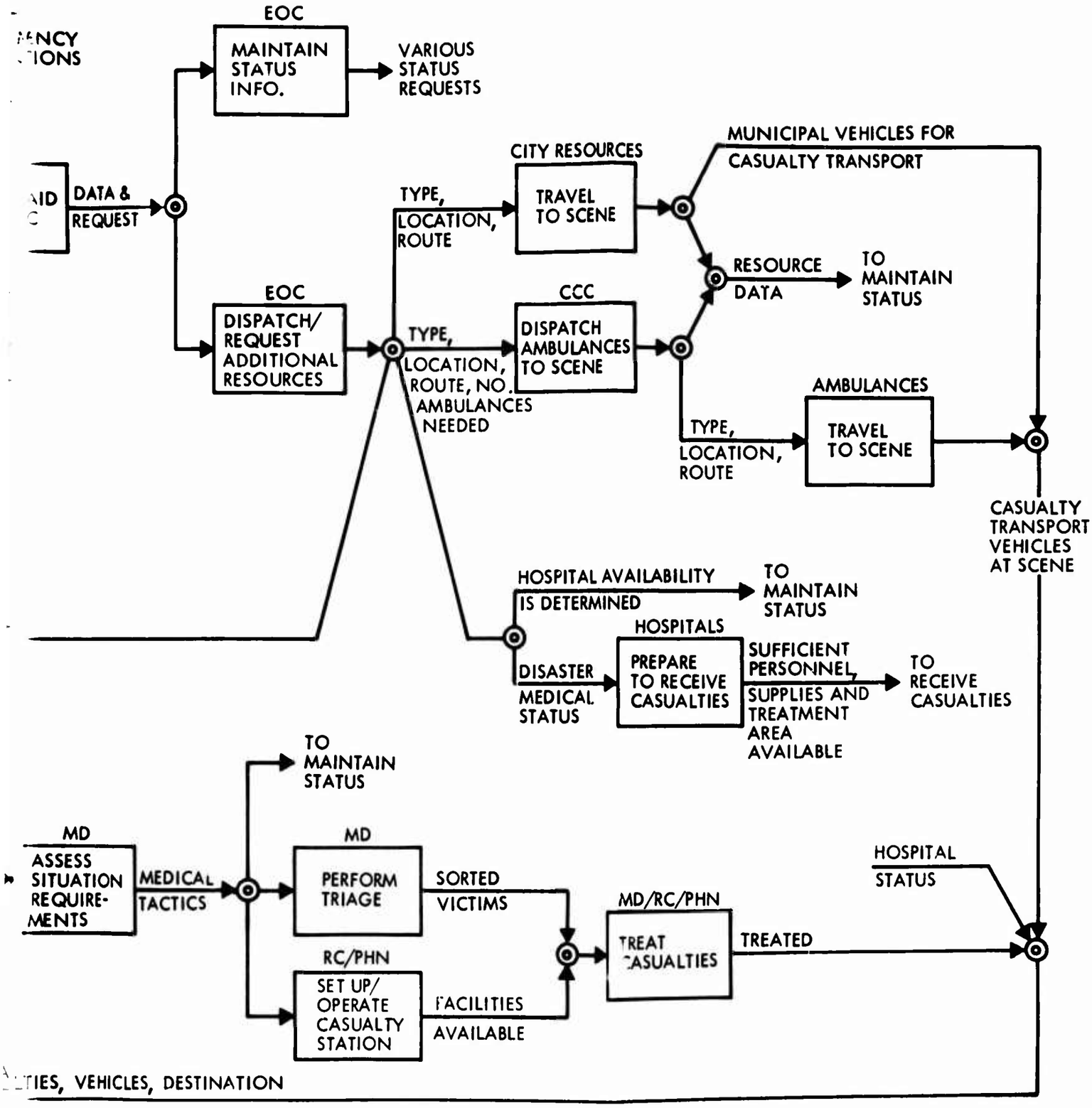

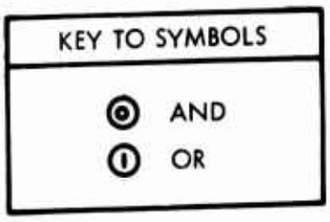

FIGURE 2. EXISTING SAN JOSE EMCCS

ASSESS THE SITUATION to determine the nature of the disaster, its extent and possible development, an estimate of the type and number of casualties, and the additional resources needed to handle the emergency (e.g., fire, police, public works, first aid personnel, ambulances, etc.). The disaster scene commanding officer (C.O.) then will transmit status data to the EOC and REQUEST AID FROM EOC via fire or police radio.

The EOC receives status information and the requests for support and records them for future use. All radio traffic is recorded on a 24-hour basis and stored on magnetic tapes. This function, MAINTAIN STATUS INFORMATION, is very important for planning and coordination purposes and is a major input to the command function. The data must be maintained in a manner and location which allows easy access by EOC personnel (large charts, maps, etc.).

The police/fire dispatchers in the EOC will DISPATCH/REQUEST ADDITIONAL RESOURCES to the disaster scene. While police, fire, public works, and other city-owned and controlled personnel and equipment can be directly sent to the scene, a unique system of ambulance control exists in Santa Clara County. Begun in 1961, a coordinated county-wide ambulance dispatching and control program handles all emergency ambulance service and is operated by the County Communications Center (CCC).[1] Thus, the EOC will request, via direct private telephone line, the CCC to DISPATCH AMBULANCES TO SCENE. Information given to the CCC will include the existence, location, and route to the disaster and the number of ambulances requested. (Currently, there are 24 ambulances operated

---

[1]Santa Clara Communications Department, Coordinated Ambulance Program, 1966. Service is provided for all sixteen cities and unincorporated County area, with specific companies assigned to specific zones. Strict control is maintained over emergency ambulance activity.

BLANK PAGE

in the County by six private companies.) Once the ambulances have been dispatched, the CCC will notify the EOC that the vehicles are enroute (TRAVEL TO SCENE). Since this disaster is postulated to severely tax the emergency resources, Public Works (PW) vehicles will be assigned to provide medical transportation to augment regular ambulances. PW vehicles are radio-equipped and thus can be controlled from the EOC. The ambulances are equipped with radios set at the County Medical frequency, and the CCC is linked to each company's office via direct private lines; dispatch can be made by either means.

The EOC will also contact various hospitals in the area, inform them of the disaster and their probable degree of involvement, and determine their status, i.e., how many casualties they can treat immediately, how soon they can expand their treatment facilities, etc. This is of prime importance to all parties since, quoting the Disaster Research Center (ref. 20):

> Hospitals close to the area or hospitals that are well known to the community often receive the greatest number of injured, thus taxing their resources, while other hospitals which would be capable of caring for casualties receive few or no victims.

This fact was driven home in San Jose in March, 1963. A boiler exploded in the basement of the Thrifty Drug/J.C. Penney Department Store building, and a total of 72 casualties were treated. Nearly half of these victims were taken to San Jose Hospital, since it was the nearest facility. Some direction to other hospitals was exercised, but only after San Jose Hospital was almost full. Direct private telephone lines now exist for this purpose (obtaining and updating status information). Since the

hospitals felt insufficient warning was given before the first casualties began arriving, procedures have been changed, and the EOC dispatcher now alerts the hospitals in the city and determines their status as soon as he has dispatched the emergency vehicles.[1] Also, following the Penney's explosion, a county-wide, Catastrophic Disaster Hot Line telephone system was installed by the County. Most of the hospitals in the County, the Red Cross Blood Bank, and the CCC are on the line. It is, effectively a party line with all points simultaneously connected although a bell-ringing code is used to alert a particular destination. This is a CCC-administered facility, and San Jose EOC does not have a position on the line.

Since the EOC dispatcher does not have a direct line to the hospitals outside the city, he will have to request the CCC to interrogate those hospitals and relay their status back to the EOC. Following alert, the hospitals PREPARE TO RECEIVE CASUALTIES and arrange to have sufficient personnel, supplies, and treatment areas available upon the arrival of casualties.

To assume overall control of medical operations, the City Public Health Officer (PHO) is summoned, and REPORTS TO EOC. At the EOC, the PHO will confer with Civil Defense, Fire, Police, and other officials, review the status information available, and COMMAND AND CONTROL MEDICAL RESOURCES to coordinate the various medical activities. Several major activities are performed under this broad "command" heading. The Public Health Officer will contact a hospital near the disaster scene and request that a physician be dispatched to assume medical direction at the scene.

Typically, the disaster scene is teeming with activity and confusion is almost unavoidable. Traffic snarls created by emergency vehicles,

---

[1] Pace, Joseph L., M. D., (San Jose City Councilman), J.C. Penney's Explosion - March 22, 1963, Presentation to Ad Hoc Committee on Communication Services on Initial Care and Transportation in Medical Emergencies, October 1963.

sightseers, news media personnel, etc., often delay or prevent medical personnel from reaching the scene (ref. 33). A proposal designed to alleviate that problem has been advanced by the Santa Clara County Medical Society's Medical Disaster Committee. The proposed plan calls for an official emergency vehicle (police, fire, etc.) to be dispatched to a designated hospital to pick up and transport a doctor to the disaster scene. This provides the fastest available transportation since the emergency vehicle driver, is in contact with the EOC and can be informed of the most desirable route. This plan also provides for the establishment of zones, or regions, throughout the County and the designation of a major general hospital as the facility in charge of that region -- at least to the extent of supplying the MD for on-site direction and possibly other, trained personnel (ref. 26). Just how, or whether the plan will affect the San Jose EMCCS is yet to be determined.

The next activity performed by the PHO is to send Public Health Nurses and Red Cross workers to the scene to aid the physician in charge. In various reports, the Disaster Research Center has noted that a great deal of work at a disaster scene is performed by volunteers. However, they also note that volunteers represent unknown qualities (and quantities) -- in terms of training, stability, reliability, etc. and that it is unwise to plan on the convergence of a fixed number of volunteers. Rather, it is better to formulate, train, and rely upon a cadre of nurses, Red Cross personnel, etc. in providing medical assistance and use volunteers in supplementary roles.

The major and continuing activity of the PHO is coordination between disaster scene(s) requirements and medical resources. That activity continues for the duration of the disaster, or until all casualties have been treated and/or transported from the scene.

At the scene, the physician will ESTABLISH A MEDICAL COMMAND, at which point the other medical personnel can gather to await instructions. The MD will receive a briefing from the emergency services' commanding

officer to determine the number of casualties, if they have been placed in any specific locations, the likelihood of additional victims, and any other information necessary or helpful to his work. He will then ASSESS SITUATION REQUIREMENTS to derive his own plans for on-site direction of medical activities. He will coordinate these plans with the PHO at the EOC, probably via a Police or Fire Department vehicle radio.

The major function of the physician directing the medical operations at the scene will be to PERFORM TRIAGE, which is (ref. 25):

> The dynamic and continuing professional medical process of classifying the sick and injured according to the urgency and types of conditions presented, in order that each casualty may receive optimum treatment and care in the best staffed and equipped treatment facility available, within the optimum time and in favorable conditions, to the end that the greatest good can be rendered to the greatest number in the shortest time within the means available.

This sorting procedure will normally divide the casualties into several groups, based on type and severity of injury, and requirements for treatment.

As close to the scene as possible, the Red Cross and/or Public Health Nurses will SET UP/OPERATE A CASUALTY STATION. There are about thirty casualty stations throughout the County, with seven located in San Jose. Other Red Cross and nursing personnel and the MD on the scene will TREAT CASUALTIES with minor injuries. Those casualties which must be treated elsewhere will be loaded onto the ambulances or public works trucks, depending on the nature of the injuries. The vehicles will then TRANSPORT CASUALTIES to the various hospitals or the casualty station. Instructions to vehicle drivers will come from three sources. The MD will make

the hospital/casualty station decision, the EOC will tell the Public Works driver which hospitals to proceed to, and the CCC will provide the ambulances' destinations.

When the vehicles arrive at the hospitals or casualty station, the medical facilities personnel will RECEIVE/TREAT CASUALTIES. As the facilities continue to receive casualties, their status will change, and they will relay these changes directly to the EOC or indirectly via the CCC Hot Line. After the vehicles unload the victims at the facilities, they will check in with their respective control stations (EOC and CCC) to RECEIVE NEXT ASSIGNMENT. The assignment may be to return to the scene for more casualty transportation, to a different disaster location, back to their non-emergency location, or be assigned to a different commander (e.g., Public Works vehicles could be assigned to the Fire Commander for debris clearance).

This functional description can be considered as a cyclical outline. That is, depending on the disaster conditions several, or all, of the functions can be repeated. For example, additional fires could break out, requiring more resources at the scene; or the casualties could overwhelm the capacity of one physician, and the PHO would have to dispatch additional doctors to the scene for triage and treatment. Several physicians might be required to run the casualty station if the triage indicated a good deal of short duration surgery. These developments will result from close coordination of on-scene activities with the MD in charge of the disaster scene medical activity.

In order to carry out this coordination, communications facilities must be constantly available to the physician. Currently, San Jose feels that there would be sufficient emergency vehicles at the scene to provide the MD with communications wherever he needs them. However, the fact that there are no established communications means planned for the casualty stations, and that no facilities unique to the MD have been established could be serious shortcomings to efficient and thorough medical relief operations.

The preceding paragraph suggests several areas in which San Jose/ Santa Clara County could use improvement. Basically, San Jose has no direct control over the ambulances operating over its territory. While the county-wide system is very effective it illustrates the general problem of city-county or city-city relations. A discussion of this problem as it affects implementation of an EMCCS is presented in a later section. An additional problem is the lack of a terminal on the county-wide medical hot line linking county communications, hospitals, and blood bank. Such a terminal at the city EOC would allow faster, more accurate status reporting and alerting than the present methods. And, the areas of hospital personnel notification and recall are quite nebulous and should be examined to provide a more positive procedure of getting personnel rapidly to their disaster stations.

Two major problems are handled very positively by San Jose: distribution of news release information and need for overall medical coordination. Erroneous and inflated casualty information regarding victims of the Penney's explosion was given to mass media by several sources. This generated excessive concern, increased congestion at the scene, and unneeded offers of major assistance from throughout the country. Upon review of the city's fire, police, and medical response to the emergency, it was decided that the Disaster Coordinator would verify all news releases before sending them to press, radio, and television.

Secondly, the San Jose personnel recognize the need for an overall medical coordinator to handle the dispatching and use of the system's resources to avoid waste and time. Thus, the city's Public Health Officer has been designated to fill that position, and he is summoned to the EOC as the need arises. Selection of the Public Health Officer, however, potentially raises another problem (see Implementation).

GENERAL OPERATIONAL PARAMETERS

Viewed at the gross level all emergency medical systems perform, with more or less success, three major functions:

- Command
- Coordination/decision-making
- Communications

All three are closely entwined, for through the exercise of command, the emergency medical system is channeled and controlled. Implied in command is the authority to coordinate between system elements and to make decisions with regard to resource allocation. The means by which these functions are executed is communications. And, as pointed out by Dr. Quarantelli, "rapid and accurate communications are the core of any effective organizational response to emergencies; without communications other problems cannot be solved." (ref. 20)

Within each major function are a number of subfunctions which reflect implementation differences between emergency medical systems. Information contained in disaster reports was categorized according to the function to which it was related using the preliminary functional framework developed for San Jose. The analysis of the San Jose system, itself, allowed examination of one set of constraints and a basis for estimating the potential effectiveness of the established EMCCS during emergency conditions. The other disaster organizations studied were also found to differ in their effectiveness in performing various emergency medical functions. In retrospect, it is possible to evaluate the alternative means employed by those organizations in terms of the overall goal of the emergency medical system. That is, to provide for

appropriate and expeditious treatment for as many casualties as possible, given a finite number of resources. The magnitude of the medical requirement subsequent to a nuclear attack unquestionably would exceed a given city's capability. For example, ambulances in many cities are privately owned commerical enterprises. The number of vehicles is determined by the day to day needs of the community. No company could stay in business if it maintained personnel and equipment much in excess of routine requirements. Public agencies, as well, are reluctant and inhibited by taxpayers to spend the large sums necessary to have "excessive" vehicles and personnel at the ready. Thus, supply and demand operate to preclude preparation for the 80 year flood or the seemingly remote nuclear war.

It appears reasonable to assume that a city's medical needs will exceed the physical ability to service. The problem is not the maximum system which can easily handle the emergency medical needs regardless of magnitude, but rather, the most effective system, i.e., that which makes maximum use of available resources. Of course, it would be possible to develop specifications for an ideal emergency medical command and communications system (one that takes prompt and appropriate action for every injured individual), but its impracticality would be obvious to potential users.

Within the context of command, coordination, and communications, the EMCCS must provide for specific operations and is faced with the same general problem shared by the Army Medical Corps in battle.

Records of catastrophic disasters indicate that the disaster site like the battlefield, is typically remote from a medical care facility. What seems as a statement of the obvious establishes several important requirements on the emergency medical system, e.g., transportation, first aid, and communications. Briefly stated, the emergency medical system must provide for treatment at the disaster site and transportation of seriously injured to hospitals or other treatment stations for definitive care.

Review and synthesis of actual disaster reports has revealed certain similarities which transcend location and disaster type. Those common strengths and weaknesses of the observed EMCCS's have been arranged into a set of design guidelines and are discussed separately below.

The work of the Disaster Research Center at Ohio State University will lead ultimately to the "formulation of general principles of social organization which come into effect in a crisis." (ref. 33) They have chosen to withhold evaluation until all the facts are in. We are forced by our task to take that step from incomplete facts to conclusion. It is believed that the level at which we make our evaluations will allow them to be both valid and useful.

PLANS

The scope of research specifically excludes examination of disaster plans. However, the analysis of disaster reports revealed that the most outstanding requirement for any EMCCS is an operational plan -- a description of procedures and how the system works. Anything short of complete automation requires provision of operating procedures for personnel. Moreover, those systems which, due to multiple and some unknown contingencies, cannot be automated benefit most from the unique ability of the human to handle novel stimuli. But even here, operation guidelines should be provided.

Research indicates that where plans were developed over time with specific organization-task assignments the response to disaster was found to be fast and efficient. The 1964 flood in Cincinnati, Ohio was very well handled by the disaster organization. The disaster plan and organization implementing it was a product of long experience with periodic floods (ref. 7). But in another city, prior flood experience did not result in an emergency plan, and disaster operations were marked with conflicts between organizations, duplicity of functions and confusion (ref. 32). Similar disorganization and over-response was reported in the description of the nursing home fire in Ohio (ref. 9):

> ... the actual organizational response was marked by a great deal of ad hoc decision making, the absence of any overall or central control and considerable improvisation in intra and intergroup operations.

The disaster plan for San Antonio was thorough enough for "natural disasters, fire, common explosions and war", but did not adequately cover unexpected or unusual situations, e.g., the explosion at Medina AEC base in 1963 (ref. 13).

The most effective system is that which programs or provides appropriate procedures for foreseeable situations and establishes ground rules for handling unexpected conditions. The plan should assign responsibility for performance of the required system functions and specify exactly the proper response (both means and content) to any given input (ref. 1).

> Personnel who did not undertake as much coordinating work as would have been desirable, might have been much more attuned to this need had they been assigned such a function in a disaster plan.

One problem, of course, is that it is impossible to predict every possible input or situation resulting from a particular disaster.

The fact that input contingencies are difficult to define often results in an EMCCS which assigns responsibility for major functions but does not specify the methods by which they are to be carried out. Then, it is especially difficult to develop an effective communications system; a plan which states only that "these people will do their best" cannot be used to specify communications requirements.

It is true that plans which are based upon little empirical data will not provide for every contingency. But there is a tendency for planners to become overwhelmed by the unknown aspects and fail to provide procedures for those that are known.

Communications systems which over-react to unspecifiable requirements usually provide a means for every system element to talk to every other element. The argument is simply that since we do not know what the requirements will be, we must design for <u>any</u> contingency.

To some extent that is true, but a system which provides equal communications capability for all stations (such as a party-line) fails to use the information that is available, i.e., the fact that some links are known to be more probable than others. There is some degree of certitude in the most uncertain situations. No one can say exactly what the unique communications requirements would be for a particular disaster. But it is possible to anticipate relative traffic loads between system elements if their general operational procedures are spelled out in detail.

As was learned at one natural disaster, plans developed by the city or its agencies specifically, "should be fully distributed and understood by all emergency organizations likely to come in contact with the originating group . . . to prevent wasteful duplication of effort." (ref. 2)

In addition, the general disaster plan for a city should integrate or dictate the plans developed by sub-elements (hospitals, fire department, police, etc.) and should be compatible with Civil Defense Operational Area and State plans. Research findings indicate that hospitals which did not have disaster operations plans at the time of a local disaster, while not completely overwhelmed, operated at far less than optimum efficiency.

Special attention should be given to plans for utilizing paramedical groups and unskilled volunteers including Red Cross, Salvation Army, ROTC, CAP and CD auxiliary (ref. 15). Small boat owners were organized for orderly mobilization during floods in Cincinnati, Ohio (ref. 32). Often these groups have independently formulated disaster plans in addition to or in the absence of a city plan.

It was noted in the Fitchville, Ohio Nursing Home fire in November of 1963, that the Red Cross was never formally notified and thus its mobilization trailed considerably behind the sequence of events. The Salvation Army was able to respond more quickly since it did not wait for requests or orders -- its personnel simply came to the disaster upon hearing of it (ref. 9). In the absence of known plans, volunteer workers in another situation might even be subject to arrest for converging to the disaster area. Certainly the entire situation would have benefited from pre-disaster planning and in the deployment of volunteer workers.

Disaster planners must evaluate the capabilities of particular volunteer organizations and decide upon their best utilization within the context of their own city. By definition, volunteers cannot be relied upon to the degree that firemen, policemen or other city employees can. In general, such groups should be given support functions.

SYSTEM TRAINING AND EXERCISE

A system which includes human operators, no matter how well planned, if unexercised will perform less than optimally. However, there is evidence that an unexercised plan is better than no plan at all (ref. 15).

The operational effectiveness of a system has been proven to be a function of the frequency and realism of exercise. Even if the actual emergency differs drastically from the simulated exercise, personnel will have a sensitized attitude towards potential difficulties and problems (ref. 17). Likewise, when personnel are always assigned the same tasks during emergency operations, emergency functions approach the routine (ref. 32).

However effective and necessary practice drills may be, they are often expensive and less than enthusiastically executed, since they interfere with routine operations which have a more apparent and immediate importance. One of the most beneficial aspects of the disaster drill is the debriefing session, but even this is sometimes rushed because personnel must attend to other duties. [1]

A more direct and positive method to insure efficient operation during emergency conditions is to embed the emergency medical command and communications system within the normal system -- differences being only in the kind and frequency of traffic. A system which uses the same or similar procedures and channels for routine and emergency operations is, in a sense, constantly exercising its emergency plan. For example, all ambulance dispatches in the County of Santa Clara

---

[1] Author's observation in disaster drill at El Camino Hospital, Mountain View, California, 29 September 1966.

are executed by the County Communications Center. That function and the personnel performing it would be unchanged during emergency operations.[1]

CENTRAL CONTROL OF MEDICAL RESOURCES

A common requirement experienced by all cities which have faced a large scale disaster is the need for a central control point from which to direct and coordinate disaster operations. Some hospitals are flooded with casualties while others receive none or are oblivious to the disaster. Ambulances converge on one area while other areas call vainly for help.

Without some type of central control, action is taken without authority or direction (ref. 34 and 32). At the disaster scene, the authority gap is sometimes filled by unqualified persons at different places and, naturally, without proper coordination. At other times, the organization with the greatest recognized capability will fill the power void. In either case the lack of a recognized and unified point of authority produces a recurrent validation requirement. The validation process can result in conflict, overlapping activity and failure to use available resources (ref. 32).

The general function associated with a control center is, for our purposes, overall control of the emergency medical response. It was noted in the Montreal disaster of 1965, that distribution of casualties to the several hospitals was not controlled and resulted in some unnecessary overload. It was also noted that no means was provided for information transfer between hospitals and the disaster site thus limiting the hospitals' ability to prepare for the casualties (ref. 2).

---

[1]Santa Clara Communications Department, Coordinated Ambulance Program, 1966.

The link from disaster sites to hospitals is not necessary if a control center is linked to both and coordinates needs and surpluses. For large scale disasters, the control center must be linked to the action elements. The means by which control and coordination is exercised is communications.

A general requirement also exists for coordination between the needs of various system elements. In one instance the lack of coordination and clear lines of authority caused ambulances to be diverted from their instructed destinations by unknown persons, possibly off-duty policemen (ref. 17). It was observed at the Attleboro, Massachusetts explosion in 1964 that the absence of an inter-organization control center caused organizational units "to work independently at the task which 'seems most urgent' to them for some time." (ref. 34) The importance of coordinating emergency medical services with all emergency services is keenly recognized by the American Medical Association (ref. 16).

Another important function made possible by a central control area is collation and synthesis of data which allows command decisions to be based upon complete information. During the Baldwin Hills Dam disaster operation, the Civil Defense staff acted effectively as liaison between other organizations for information gathering, resource checking, etc. (ref. 8).

In some of the natural disasters studied, the requirement for central control was adequately met by establishing a headquarters at the disaster scene (refs. 2, 8). Where casualties are few and concentrated in one area the need for coordination is reduced and resource allocation becomes less critical. The value of central control is most appreciated when the disaster covers a broad front or several different locations, as would no doubt be the case in a nuclear attack. Control and allocation of resources becomes critical and decisions must be based upon accurate and current status information.

Establishing central control does not preclude the existence of field control areas or satellites which have similar functions in smaller areas. The remote sites would reduce the load on the main control center and could serve as backup to the control center.

The official in charge of emergency medical operations (CMC) should have communications facilities which allow him to control the allocation of medical resources and to coordinate activities with other disaster agencies.

Throughout the foregoing discussion emphasis has been placed upon requirements produced by widespread devastation, i.e., multiple casualty stations, multiple hospital involvement, auxiliary vehicles, etc. While the natural or non-war caused disasters which have been researched did not produce the magnitude of injuries which would accompany a nuclear detonation, the characteristics of the conceptual EMCCS must appreciate the greater demands. The requirement for central control did not arise as a result of its observed inclusion in disaster operations but rather from its absence.

A large scale disaster which results from a nuclear war would also produce a requirement for coordination with higher levels of government. There should be a point within city disaster organizations which has the necessary data and authority to request aid and provide status information to the Operational Area coordinator. That function is reasonably assigned to the disaster control center.

In general, it is preferable to have a central control and communications point. The major advantage is that command decisions have benefit of complete information, thus:

1. Avoiding duplication of efforts

2. Enabling efficient coordination with other agencies

3. Capitalizing on the situational factors -- position of mobile resources, radio frequencies available, etc.

4. News releases are consistent and represent the total situation.

Much would be gained, especially in large scale disasters, if the CMC were co-located with a disaster control center which is manned by high level representatives of all participating disaster organizations. The CMC and other department chiefs should have the authority to make critical command decisions and to coordinate disaster efforts.

TEMPORARY MEDICAL CENTERS (TMC)

Dr. Francis C. Jackson[1] states that "The essence of disaster medicine is the establishment of priority in emergency care." (ref. 16) The first point at which casualty sorting (triage) is conducted is at the disaster site or the Temporary Medical Center. The medical function is performed within an integrated field command which includes other disaster organizations.

The major source of criticism at the Fitchville nursing home fire was the lack of local control. A mixture of coordinated and uncoordinated activity resulted in much duplication of effort (ref. 9). Similar criticism was leveled at the Attleboro, Massachusetts, disaster in 1964 (ref. 34).

The establishment of a field command and communications center does not insure efficient operations, however. A command post was set up early at the Baldwin Hills Dam disaster, but much rescue activity (and especially helicopter rescue) was uncoordinated. This was largely because it was a single organization's facility (police). While the fire department command post was also established, there was little information feedback from the disaster site, and "... to a considerable extent what people did

[1]Dr. Jackson is Chairman of the AMA's Committee on Disaster Medical Care.

depended on 'what they saw that needed to be done'." (ref. 8) Considerable difficulty was encountered in Indianapolis because a communications center was not established until the police chief arrived about an hour after the coliseum explosion. Existing ambiguous control was also noted at the La Salle (Canada) disaster scene (ref. 2).

A TMC provides for prompt medical attention for casualties and serves as a source of accurate assessments of the medical situation. Information inputs from the various disaster sites can be analyzed at the main control center to obtain a good estimate of medical resource requirements. The EMCCS can thus anticipate shortages and take action, when possible, to preclude their occurrence.

The Temporary Medical Center should be established early and manned by ranking representatives of the disaster organizations involved. The medical officer's functions relative to the EMCCS are supervision of first aid and triage, assessment of the general medical situation and obtaining transportation for evacuees through the main control center.

COMMUNICATIONS LINKS

Communication link requirements are contingent upon the particular EMCCS organization. The ambulance driver should know to which hospital he must go, and which is the best route. But from whom he obtains that information depends upon the particular EMCCS plan.

It was stated in a preceding section that the CMC must have communications links with all action elements to obtain status information and direct/coordinate emergency medical activities. However, in

their chapter on disaster communications, Garb and Eng list strategic points between which, they believe, communication should be established and maintained (ref. 12):

1. The impact area and the forward command post. If the impact area is large, it may be necessary to divide it into sectors, with each sector reporting to the command post.

2. The forward command post with:

   a. Impact area.
   b. Medical collection point.
   c. Rear command post, if one has been set up.
   d. Highway patrol headquarters.
   e. State civil defense headquarters.
   f. At least one hospital or medical facility in the rear area.

3. The medical collecting point with:

   a. Forward command post
   b. Hospitals.

4. Hospitals with:

   a. Command posts.
   b. Every other hospital in the area.
   c. Highway patrol headquarters.
   d. Local municipal police headquarters.
   e. State and local civil defense headquarters.

The major difference between the above communications network and the one being developed in this report is the central control concept. The research data, taken together with considerations of extra-medical disaster organization, reveal, a clear requirement for a central control point -- in addition to a temporary medical center. Many of the external communications links set forth above would be obviated by a CMC embedded within a disaster control center.

The communications system for an EMCCS which employs the central control concept would establish links between the CMC and the following system elements.

TREATMENT CENTERS

1. TMC

2. Fixed hospitals

3. Fallout shelters

In order to effectively allocate resources it is necessary to have complete and current data from which to predict future requirements. Such information obtained from all system elements is vital to the CMC function. Treatment centers also require status information such as probable number and type of casualties they can anticipate.

To fully realize the potential of hospitals to effectively treat casualties, it is essential that they be kept informed of what to expect. In one disaster study six out of seven hospitals were unaware of the disaster situation until the arrival of the first group of casualties (ref. 5). Still there was no indication of how many more would be arriving. Elsewhere, it was reported that advance warning was supplied to the hospital via police (communications means not given) which enabled hospital emergency operations to be initiated and physicians were standing by 20 minutes after the explosion (ref. 2).

TRANSPORTATION

1. Medical vehicles (ambulances)

2. Auxiliary municipal vehicles (public works, fire, police)

3. Other available vehicles (military, commercial, private)

Blast and fire damage together with the mass of private vehicles will restrict traffic flow over some city streets. Traffic information is received from various sources: police, fire, private citizens, etc. When collated, information on traffic conditions for various site-to-hospital routes can be relayed to emergency medical vehicles, thus avoiding unnecessary delays enroute.

SUPPORT

1. Municipal organizations (public health, fire, police, public works)

2. Paramedical groups (Red Cross, Salvation Army)

3. Communications groups (RACES, ham operators)

Convergence of people to the disaster site and treatment stations requires that local traffic control be maintained by police. The convergence phenomenon in disasters is a major problem and is widely recognized (ref. 11). A dramatic example of convergence was experienced subsequent to an explosion at an Atomic Energy Commission Base at San Antonio, Texas. In spite of a dust cloud somewhat resembling a mushroom shape, people rushed to the area (ref. 13). Coordination between traffic controllers and the EMCCS is essential to effective medical operations. Traffic control service is required not only for street and disaster scene, but in the vicinity of the hospital and within the hospital itself. It is reported (ref. 33):

> ... when the influx of casualties is occurring and when the effort of dealing with victims is at its peak, there are frequently great masses of people jamming the corridors and the parking areas outside. At times, the approach and exit routes to the hospitals become completely clogged.

When the emergency medical command and communications center is integrated with other disaster functions coordination requirements are more easily met.

During conditions of overload, as would result in a major disaster, volunteer or paramedical groups such as the Red Cross and Salvation Army can play an important role. It is important, however, that the efforts of these and other volunteer groups be controlled. Problems resulting from over-response and inefficient utilization of auxiliary manpower have been discussed earlier (refs. 34 ,32 , and 2), and in one case medical auxiliaries never were formally notified of the disaster (ref. 9). Where the Red Cross was well integrated with the disaster organization, they were able to make a definite contribution (ref. 7).

RACES or informal groups having mobile radio equipment should be linked with the EMCCS. This group of volunteers provides a means for the EMCCS to react to unforeseen communications requirements, e. g., by dispatching a RACES operator to newly required locations. The Civil Defense staff in Paramount, California are all members of RACES (ref. 8) and probably represents the ultimate integration.

DISASTER OPERATIONS COMMANDER

The Disaster Operations Commander, in charge of the total disaster effort, would serve as an intermediary between mass news media and between high government echelons. The CMC would make requests for additional resources and report medical status to the Commander for action.

BACKUP REQUIREMENTS

Failure to perform some system functions would result in severe EMCCS degradation. The dependency of EMCCS functions upon communications channels in turn makes certain channels very critical. A

conceptual EMCCS must provide communications equipment and/or procedures to compensate for a failure in the primary communications mode. No communications backup was provided for the receiving hospital at the Attleboro explosion disaster and when phone lines became jammed the hospital was isolated from the rest of the system (ref. 34). The Santa Clara County-San Jose City communications net includes both a hot line to each major hospital and a party line between the communications center and most hospitals in the County.

BLANK PAGE

DESCRIPTION OF CONCEPTUAL EMCCS

The overall Emergency Medical Command and Communication System is described in four sections. The first section describes the system elements, sub-elements and their major functions. Next, the different types of information circulated among these elements are defined. Third, communications links are formulated, showing how required information is distributed among the various elements. And finally, a diagram and description of all functions performed by the elements within the system are presented. The typical operations of the system are shown with an explanation of the interdependency among elements and the information required by each element (or sub-element) to achieve the medical goal of the entire system: optimum treatment of the greatest number of casualties in the severely constrained post-nuclear attack environment.

SYSTEM ELEMENTS

The recommended Emergency Medical Command and Communication System (EMCCS) contains four major system element groups:

- Central Medical Control
- Treatment Centers
- Transportation
- Support Groups

Each of these groups and their major functions are discussed below.

CENTRAL MEDICAL CONTROL

The number of personnel comprising this system element can vary from one overall medical coordinator to a fairly sizable staff, depending on the size and complexity of the urban area and its disaster medical requirements. The several functions for which Central Medical Control (CMC) is responsible are: managing all available medical resources; arranging for additional aid or supplies from all possible sources; and rendering assistance to other elements of the medical response system. More specifically, the decision making and overseeing role of the CMC staff requires that the following actions be taken.

1. Select location, dispatch equipment, and assign personnel to man various temporary medical treatment centers (triages, casualty stations) in the field.

2. Dispatch and route transportation resources to specific locations (ambulance pools, temporary medical centers, hospitals, supply stations).

3. Control distribution of transportable casualties to the various hospitals based on needs and hospital space availability.

4. Supply medical advice and/or supplies and personnel to fallout shelters depending on accessibility to shelters.

5. Issue casualty and other medically oriented information to the Disaster Coordinator for release to news media.

6. Coordinate medical needs with those of other related public safety groups.

7. Aid in recalling medical personnel to hospitals.

To insure effective performance of these functions, various types of information showing status and needs must be collated and maintained at CMC. Previous sections in this report support the recommendation for this central "clearinghouse," and since there will be a great deal of interaction between CMC and other supporting groups, it is recommended that the CMC be physically co-located in the Emergency Operations Center (EOC) or other disaster headquarters, with other command groups. Benefits which accrue from that organization are listed below.

1. Close, rapid, person to person contact among high level, responsible officials - allows continual opportunity for coordination of resources and actions; inter-organization consultation on current, pressing matters; and harmonious operations toward mutually recognized goal. The staff personnel would include fire, police, civil defense, public works, public health, and other public agency representatives; Red Cross, Salvation Army, and similar auxiliary organizations; and perhaps liaison officers of military or other groups operating over territory greater than that under EOC control.

2. Unified status displays - several emergency agencies and staffs will utilize the same information (e.g., Disaster Locations, Radiation dose and spread patterns, Casualty Status, Street/Transportation availability), and a single set of displays will reduce update time and will lower probability of error related to independently maintaining current information at several locations.

3. Decreased load on overall communication system - direct, personal contact among high level personnel virtually eliminates need for communications between outlying and support groups and satisfies the requirement of all staff personnel being able to confer with one another at will.

External communications facilities must be provided to allow contact between the CMC and other system elements throughout the entire period that the EMCCS is operational.

TREATMENT CENTERS

Two major types of medical facilities make up this system element: permanent and temporary locations. Their major functions and communications requirements are discussed in detail below.

Permanent

Established hospitals form the most intensive, long-term element of the EMCCS. Their major function will be to provide required treatment to casualties transported from field triage sites. However, it is anticipated that due to community awareness of the hospital, many people will converge upon hospitals -- both casualties and non-injured. Thus, a triage station will have to be established in the hospital area and some form of security or crowd control will also be required (cf. Support element).

To plan for casualty arrival (number and type), to supply status information, and to request needed supplies from CMC, communications means must be provided for contact between hospitals and CMC as required throughout the disaster period.

Hospitals must be able to communicate with Central Medical Control throughout the post-attack period to efficiently carry out their function. Proper distribution of casualties from disaster locations, rapid replenishment of consumable medical supplies, and aid in recalling of medical personnel to the hospitals are some of the requirements for continuing communications ability. Depending on the hospital and community disaster plans, personnel will be alerted in a variety of ways.

The CMC can aid in this action if hospitals report their specific personnel needs early in the post-attack time period and as the needs arise throughout the emergency operations period.

Moreover, early alerting of hospitals by CMC will permit hospitals to begin vital, disaster dictated preparations before casualties arrive. Such actions as increasing bed capacity, re-allocating types of treatment areas, activating the decontamination area, activating the supplementary morgue area, and implementing the emergency records system require some time to carry out (ref. 31). Early warning significantly aids the hospital staff in these duties.

Temporary

Temporary medical treatment centers (TMC) including assigned personnel are grouped into this sub-element. Sites for triage activities, casualty stations, packaged disaster hospitals, and radioactive fallout shelters are the four types of temporary medical centers. Personnel can range from doctors trained in military procedures of triage (casualty injury sorting), nurses and other medical personnel, to private citizens recruited from the general area to assist in various tasks as needed.

Triage Sites

The triage function, i.e., sorting casualties into treatment priorities, is based largely on military procedures and results in the establishment of classes of injury severity and treatment required. Medical authorities have recognized that the sorting process is of paramount importance during disaster operations to insure best possible treatment in the shortest time for the most people. Moreover, sorting must continue at each stage of the treatment process, at each treatment center, throughout the post-attack period.

In discussing the triage function, Bowers and Hughes note that (ref. 10):

> Casualties seem to fall into four natural categories and these have been formalized into Treatment Groups. There are the walking wounded, well known in combat surgery and the various non-effectives who need very little specialized care, making up the Minimal Treatment Group. Next are the casualties who obviously require Immediate Treatment if they are to survive. Then there are the casualties who require resuscitative measures before coming to operation or whose condition will not deteriorate unduly by a period of waiting, making up the Delayed Treatment Group. Finally, there are those patients who are so seriously injured that survival cannot be anticipated or patients for whom necessary treatment facilities are not available. These make up the Expectant Treatment Group.

The Army issued a bulletin in 1955 and estimated that approximately 40% of total casualties would fall in the Minimal Treatment Group and 20% in each of the other groups (ref. 28). These percentages were based on large civil disaster and expected atomic disaster figures. However, more recent information regarding the greatly increased damage area, greater difficulty in transporting the injured to medical centers, rapid exhaustion of resources, and rapid incidence of death from serious injuries and radiation from thermonuclear attack had led to regrouping the proportion of casualties among the groups. Citing the above information, Dr. Bowers and Hughes estimate the figures at 45%, 5%, 45%, and 5%, for the four

groups, respectively (ref. 10). An alternate, three-category sorting scheme has been suggested by Garb and Eng in their Disaster Handbook for the post-attack environment (ref. 12). While this priority grouping may be further revised with increased knowledge of nuclear disaster effects, nevertheless the sorting procedure itself remains as the most significant function to be performed at the disaster site. Dr. Francis C. Jackson, Chairman of the American Medical Society's Committee on Disaster Medical Care emphasized the importance of the triage procedure in an emergency operations symposium (ref. 16):

> The essence of disaster medicine is the establishment of priority in emergency care... This is a continuous procedure which must be instituted at every stage of the survivor's progress beginning at the time of his injury and extending to the period of final or definitive care for his injury.

The triage activities may be conducted by themselves near the disaster site, in conjunction with temporary or fixed treatment centers, or both, depending on the number, type, and distribution of casualties throughout the overall disaster area.

Casualty Stations and Packaged Disaster Hospitals

Transportable casualties may be moved either to fixed hospitals or temporary casualty stations following the initial sorting procedure. Two main types of temporary centers are commonly used in major disaster medical care: Casualty or First Aid Stations and Packaged Disaster Hospitals (formerly named Civil Defense Emergency Hospitals). A Casualty Station is defined as : "A First Aid and treatment center for disaster victims equipped to care for 400 casualties"(ref. 25). Supplies and equipment for setting up Casualty Stations are generally located in public or semi-public buildings (schools, churches), and

typically, personnel assigned carry out the functions of triage and "... treatment such as arresting hemorrhage, treatment of shock, dressing of wounds, relief of pain and protection of burns and fractures" (Ref. 25).

Casualties requiring more intensive care or surgery will be taken to fixed or Packaged Disaster Hospitals (PDH). The Federal Government has provided supplies and equipment to help meet the needs of continuing post-attack (or other major disaster situations) medical care in the form of the PDH, which includes (Ref. 30):

> ... hospital supplies, equipment, and pharmaceuticals packaged for long-term storage. In a disaster, it can be used to expand the hospital to which it was assigned. PDH's may be stored in existing hospitals or under supervision of city government Civil Defense departments or it can be set up as a separate 200-bed hospital in an appropriate pre-selected building and operated as an adjunct to its assigned hospital.
>
> Services in the PDH must necessarily be limited primarily to the preservation of life with the most sparing use of supplies and skilled manpower. Many of the services and comforts provided in an existing hospital under normal circumstances must be sacrificed during a disaster operation.

Specific hospital or public health doctors, nurses, and aides are assigned to PDH's and Casualty Stations. However, the large number of expected casualties will probably necessitate using auxiliary medical and other manpower. Various types of information must be exchanged between the persons in charge of the Temporary Medical Care Center (TMC) and CMC throughout the period of their operation. These information types will be discussed in detail in a following section. At the site, the officer in charge of the TMC will provide directions to vehicle drivers regarding the destinations of movable casualties.

Fallout Shelters

The fallout shelters' major function is to provide protection from radioactive contamination, but they must also serve as self-contained medical treatment centers. Shelter provisions typically include medical supplies and instructions for their use, and city shelter programs often establish a shelter manager who has been trained in some form of first aid procedures.

Depending on the number of casualties, types of injuries, availability of trained personnel (both assigned and by chance), and the level of supplies, various needs for communicating with the CMC will arise. Proximity to the blast and the radiation levels outside may preclude access to shelters, and the EMCCS contribution may take the limited form of advice. For those shelters which can be entered, both medical personnel and supplies may be offered if such resources are available at the time. Thus, while the basic communications content will be questions and answers about medical procedure, content could increase to include requests for dispatch of supplies and/or personnel.

TRANSPORTATION

Regular ambulances in daily use together with auxiliary vehicles borrowed from governmental departments (public works, buses, military, post office, fire, police) or private businesses (taxicabs, delivery, construction) are the components. The main function of the transportation resources is to move specific casualties from triage sites in the field to either the fixed or temporary treatment centers, depending on instructions from CMC and the medical officer in charge of a TMC.

Vehicle information needs include location of destination and suitable routine, both subject to change on short notice. Thus, it is desirable that the opportunity for contact between CMC and transportation be provided

throughout the period of this system element's operation. However, and especially in the case of supplementary, borrowed equipment, dispatch via origin and/or destination points (TMC, CMC, hospitals) provide a usable alternative to radio control.

SUPPORT GROUPS

The EMCCS elements will need both information and assistance from several types of agencies and organizations. Medically oriented groups such as public health, Red Cross, and Salvation Army may be asked to supply personnel and supplies to staff the temporary medical centers. Public safety agencies such as state and local police may be requested to provide some form of security around medical treatment centers and traffic control over routes between the various medical/disaster locations. Additional resources such as vehicles, supplies, or equipment may be required, and such groups as police and fire departments, public works departments, and State and Federal Civil Defense organizations will likely be contacted. Information about radiation, street, and weather conditions which may have significant effects on field or shelter operations may be supplied by police, fire, Civil Defense, or other responsible group according to provisions in the disaster plans. Finally, information about casualties and treatment center locations will be supplied to the official in charge of all disaster operations for release to news media for periodic dissemination.

The requirements for close contact between CMC and representatives of the supporting groups are quite important, since it is anticipated that medically-owned resources may be rapidly depleted. Thus, the recommendation of including CMC in the same facility as representatives of support groups is re-emphasized (cf. CENTRAL MEDICAL CONTROL). More effective interaction with less need for an external, high-level system results from the single direction and coordination center.

INFORMATION TYPES

The information exchanged during the operation of the recommended Emergency Medical Command and Communication System (EMCCS) is divided into six major groups, or types, four of which are further divided into several sub types. The major types are: (1) Disaster Status and Implications, (2) Resource Status, (3) Casualty Status, (4) Environmental Conditions, (5) Support Requirements, and (6) Tactical Information. These classes and their sub types are defined below.

1. DS- DISASTER STATUS AND IMPLICATIONS includes all available information describing the location, nature, extent, and possible future development of any disaster.

   a. DL - LOCATION General area covered and specific areas with special characteristics: Large concentration of casualties, heavy fire damage, relatively undamaged spots, and sites for and of triage/first aid activities.

   b. DN - NATURE Various types of damage: fire, flooding due to ruptured water pipes, major concentrations of debris.

   c. DE - EXTENT Absolute or relative amounts of damage from various causes.

   d. DFD - FUTURE DEVELOPMENTS Areas and people likely to become engulfed, time for spread to take place, probable degree of involvement.

2. RS - RESOURCE STATUS covers information concerning location, availability, operation, and amount of personnel, equipment and supplies.

   a. PS - PERSONNEL STATUS Number, availability, location of regular medical (doctors, nurses, public health, aides), auxiliary medical (Red Cross), and supplementary (other city employees, on-scene volunteers) personnel.

b. HS - HOSPITAL STATUS Number of casualties which can be immediately handled; time and type of preparation needed to treat additional victims; and estimates of medical, food, water, electrical power, other supplies on hand and needed, and estimate of people converging upon existing, permanent hospitals.

c. TMS - TEMPORARY MEDICAL CENTER STATUS Exact location, number of occupied and available beds, amount of medical and sustentative supplies remaining, and approximate number of casualties at or converging upon all temporary facilities; disaster sites/triages, first aid stations, or temporary hospitals.

d. VS - VEHICLE STATUS Location, amount, and operational function of ambulances, specifically assigned support vehicles (e.g., public works trucks, police station wagons, fire pickup trucks), and other randomly acquired vehicles -- their availability for use, ETA to hospital or other location, and any mechanical, logistical, or operational problems encountered.

e. GLS - GENERAL AND LOGISTICAL STATUS Current condition and anticipated needs of medical, communications, power, or other equipment, and stock level of food, water, medical, or other supplies at any location.

3. CS - CASUALTY STATUS Number and type of casualties, severity of injuries, their identity when known, and anticipated amount of additional victims at disaster site/triage locations, hospitals, first aid stations, or other treatment or holding centers. Also includes estimated time required to treat casualties present.

4. EC - ENVIRONMENTAL CONDITIONS

a. SCR - STREET CONDITIONS/ROUTING INFORMATION Impassable areas and streets due to debris, fire, flooding, or mass convergence of private vehicles and/or people; optimum driving and/or walking routes for medical and supply vehicles and casualties able to walk to treatment centers.

b. WC - WEATHER CONDITIONS Any weather characteristics which would aid or hinder rapid medical mobilization and operation: wind, rain, temperature, visibility.

c. RAD - RADIATION DATA Dose rate at various locations in and surrounding disaster area; rate and amount accumulated by casualties, medical and support personnel; anticipated future radiation spread patterns.

5. SR - SUPPORT REQUIREMENTS Requests for personnel, equipment, supplies, or other type of aid from any medical location, vehicle, etc.

6. TI - TACTICAL INFORMATION Instructions and coordination information to effectively render medical aid.

a. DC - DISPATCH COMMAND AND CONTROL Authorization and direction for personnel to report to hospitals, triage sites, or other locations; for vehicles to transport casualties; for supplies to be maintained and transported; or any other type of initial or continuing control function.

b. MC - MEDICAL COORDINATION Information regarding methods and degrees of treatment at various locations; questions and advice on medical procedure.

There is overlap of subject matter in several sub types due to similarity of input conditions (physical damage data appears in both Disaster Status and Environmental Conditions), location of information sources (number of casualties appears in Disaster Status and Resource Status), and intent of information use (location data of various types appear in Disaster Status, Environmental Conditions, and Tactical Information.

Since similar content is exchanged among a number of different communication points and for different purposes, the discussion of the communications links and the actual information exchanged will clarify these overlapping conditions.

INFORMATION FLOW DIAGRAM

The post-attack operations of the EMCCS can be divided into three time phases: Alarm, Operational, and Resource Exhaustion. Procedures are carried out in the Alarm Phase by the disaster control center and take the form of alerting the various system elements to prepare them for their roles in the Operational Phase. Since this phase begins with official notification of the disaster (e.g., by the Governor, the President, or a nuclear detonation) and ends with the arrival of the CMC staff at the Control Center, the time can vary from about ten minutes to one hour, depending on the CMC staff's location, difficulty of travel, and other attack related problems. The Operational Phase includes all physical operations of the system elements and all decision making and communications necessary to implement and support those operations. This phase continues as long as personnel and material are readily available. Again, depending on such attack related phenomena as number of casualties and type and degree of devastation within the area under control of the EMCCS the phase could continue from several hours to about one week. Finally, the Resource Exhaustion Phase begins when nearly all resources have been distributed throughout the system. The major functions during this phase will accomplish a continuing re-evaluation of needs, revising and reassigning priorities, and redistributing the remaining material and personnel to most effectively carry out the overall medical goals of the EMCCS.

The unique constraint of nuclear attack radiation may significantly alter progression through the defined phases. If a high rate of radiation exists around the Control Center and CMC staff cannot enter, many of the Operational Phase coordination functions may be performed by personnel already inside. If high rates exist in several portions of the populated area, medical action may have to be focused on the "safe" zones to avoid injuring the medical personnel. And, the worst case of the entire urbanized region being subjected to an unsafe rate may lengthen the Alarm Phase and

allow only for coordination among and preparation by protected system elements to implement their functions when the environmental conditions improve sufficiently. The Operational Phase in this instance may be restricted to providing information and advice to fallout shelter occupants, providing they are in contact with the Control Center. If the CMC staff cannot enter Control Center, a day to day control staffer (fire or police dispatcher) with First Aid training may have to render basic advice to the shelters. This constraint is also discussed in the Implementation Chapter.

The diagrams in this section have been prepared to illustrate the required communication links among the various elements and the types of information circulated along those links. One phase is represented on each diagram, followed by a discussion of the various functions performed during the phase. The functions are numbered and organized on the diagrams according to the group performing them, and are discussed in numerical order. They are arranged on the basis of requirements and constraints, that is the input to one function must be the output from the immediately preceding function(s). For example, if Function A is "Report Vehicle Status" and Function B is "Dispatch Vehicle", then obviously the information output of A is needed to perform B. This, then, is the only "time" connotation to the functional arrangement.

The following symbols are used in the diagrams:

⊙ "AND" (e.g., Alarm Phase, Function 3: both the Disaster Status from Function 1 and Resource Status are required to perform Function 3.)

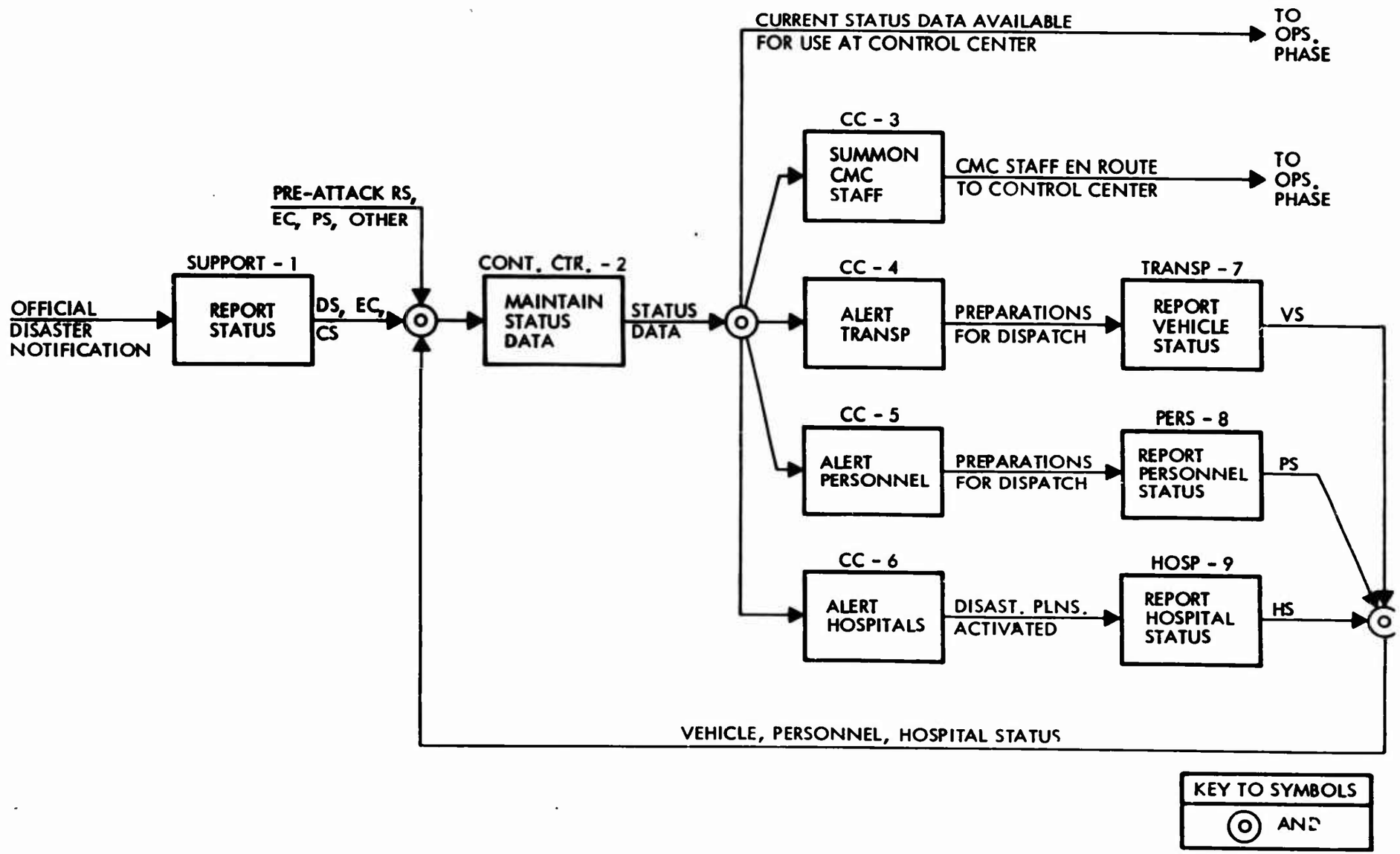

FIGURE 3. CONCEPTUAL EMCCS — ALARM PHASE

⊕ "AND/OR" (Any one path, several paths, or all paths entering or exiting this gate may be utilized. E.G., Function 2: CMC staff can exercise tactics in any one/several/all directions via subsequent actions.)

ALARM PHASE

1. SUPPLY STATUS INFORMATION (Support)

Following official notification of the disaster at the Control Center and after the trans-attack period has ended, support resources (e.g., fire and police) are dispatched to the field. Upon assessing the situation at their various locations they will report Disaster Status, preliminary Casualty Status, and Environmental Conditions (including Radiation) to the Control Center. Also reported will be Support Requirements: needs for more of their own units and, affecting the EMCCS, needs for medical personnel and equipment.

2. MAINTAIN STATUS INFORMATION (Control Center)

Pre-attack Resource, Environmental, and other status information has been routinely maintained and posted for use at Control. When Support reports disaster information (Function 1) Control will update and post the appropriate data. Status data will also be supplied as the outputs of Functions 7, 8, and 9, and this function will continue throughout the entire phase.

3. SUMMON CMC STAFF (Control Center)

Using a predetermined list of medical personnel showing their positions, locations, methods of contact, and alternates (Personnel Status) and the information received from Function 1, Control Center will get in touch with all of the CMC staff, alert them

of the situation (perhaps more accurately than commercial broadcast radio), and tell them to report to Control Center to assume their roles in post-attack operations.

4. ALERT TRANSPORTATION (Control Center)

Control Center will contact the existing medical transportation resources using the Resource Status data (location, contact method, availability) and Disaster Status data from Function 2 and will instruct them to man and prepare all their vehicles for subsequent dispatch by CMC.

The question of whether to immediately dispatch the ambulances (as would be done under less serious circumstances) or to await the arrival of CMC staff will be resolved by the attack-related phenomena. Widespread casualties, radiation danger, and sheer number of injured will make it fruitless to randomly send out the ambulances.. Rather, a coordinated and planned deployment of these resources will provide better utilization of them.

5. ALERT PERSONNEL (Control Center)

Many personnel for field assignment are not connected with specific hospitals (Public Health doctors and nurses, Red Cross and other paramedical groups) and thus must be alerted for subsequent mobilization. Using Personnel Status information from Function 2, the alerting process can be set in motion.

6. ALERT HOSPITALS (Control Center)

Using the Disaster and Casualty Status from Function 2 and planned hospital alerting procedures, the Control Center will contact all hospitals in the system and will instruct them to implement their disaster plans and be ready to receive casualties. Control will also

request current Hospital Status (number of casualties which can be immediately treated) as well as an estimate of the number of casualties which can be received after the hospitals have increased their treatment capability according to plan. Hospitals will start their personnel recall program and the other steps previously noted in the System Elements section.

7. REPORT VEHICLE AND PERSONNEL STATUS (Transportation)

After receiving the Control Center alert (Function 4) and making necessary preparations, ambulance services will report the status of their men and equipment to Control. Depending on factors discussed in Function 4, they will probably await dispatch orders from CMC.

8. REPORT PERSONNEL STATUS (Personnel)

Following Control Center alert (Function 5) personnel supervisors will contact and ready the required kind and number of people. Personnel will await dispatch instructions from CMC in Operational Phase, and will report their status to Control.

9. REPORT HOSPITAL STATUS (Hospitals)

Hospitals will begin to implement disaster plans upon hearing of the attack from Control (Function 6). After checking administrative records and their planned maximum disaster patient load, hospitals will report this information to Control. They will await CMC dispatch of casualties and casualty information in Operational Phase.

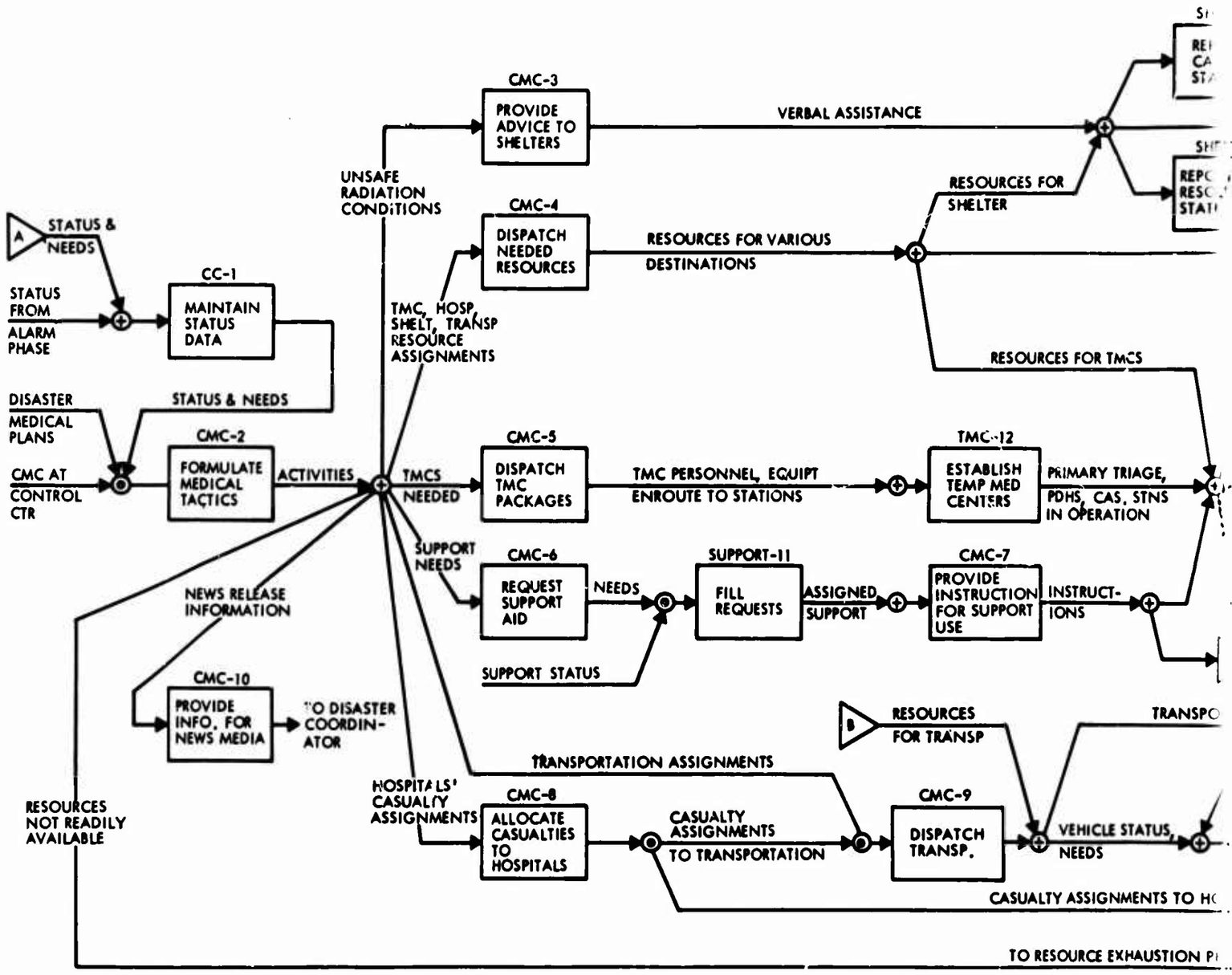
A
STATUS & NEEDS
STATUS FROM ALARM PHASE
CC-1
MAINTAIN STATUS DATA
DISASTER MEDICAL PLANS
STATUS & NEEDS
CMC AT CONTROL CTR
CMC-2
FORMULATE MEDICAL TACTICS
ACTIVITIES
UNSAFE RADIATION CONDITIONS
TMC, HOSP, SHELT, TRANSP RESOURCE ASSIGNMENTS
TMCS NEEDED
SUPPORT NEEDS
NEWS RELEASE INFORMATION
CMC-10
PROVIDE INFO. FOR NEWS MEDIA
TO DISASTER COORDINATOR
RESOURCES NOT READILY AVAILABLE
HOSPITALS' CASUALTY ASSIGNMENTS
CMC-3
PROVIDE ADVICE TO SHELTERS
VERBAL ASSISTANCE
CMC-4
DISPATCH NEEDED RESOURCES
RESOURCES FOR VARIOUS DESTINATIONS
RESOURCES FOR SHELTER
RESOURCES FOR TMCS
CMC-5
DISPATCH TMC PACKAGES
TMC PERSONNEL, EQUIPT ENROUTE TO STATIONS
TMC-12
ESTABLISH TEMP MED CENTERS
PRIMARY TRIAGE, PDHS, CAS, STNS IN OPERATION
CMC-6
REQUEST SUPPORT AID
NEEDS
SUPPORT STATUS
SUPPORT-11
FILL REQUESTS
ASSIGNED SUPPORT
CMC-7
PROVIDE INSTRUCTION FOR SUPPORT USE
INSTRUCTIONS
B
RESOURCES FOR TRANSP
TRANSPO
TRANSPORTATION ASSIGNMENTS
CMC-8
ALLOCATE CASUALTIES TO HOSPITALS
CASUALTY ASSIGNMENTS TO TRANSPORTATION
CMC-9
DISPATCH TRANSP.
VEHICLE STATUS, NEEDS
CASUALTY ASSIGNMENTS TO HO
TO RESOURCE EXHAUSTION P

A

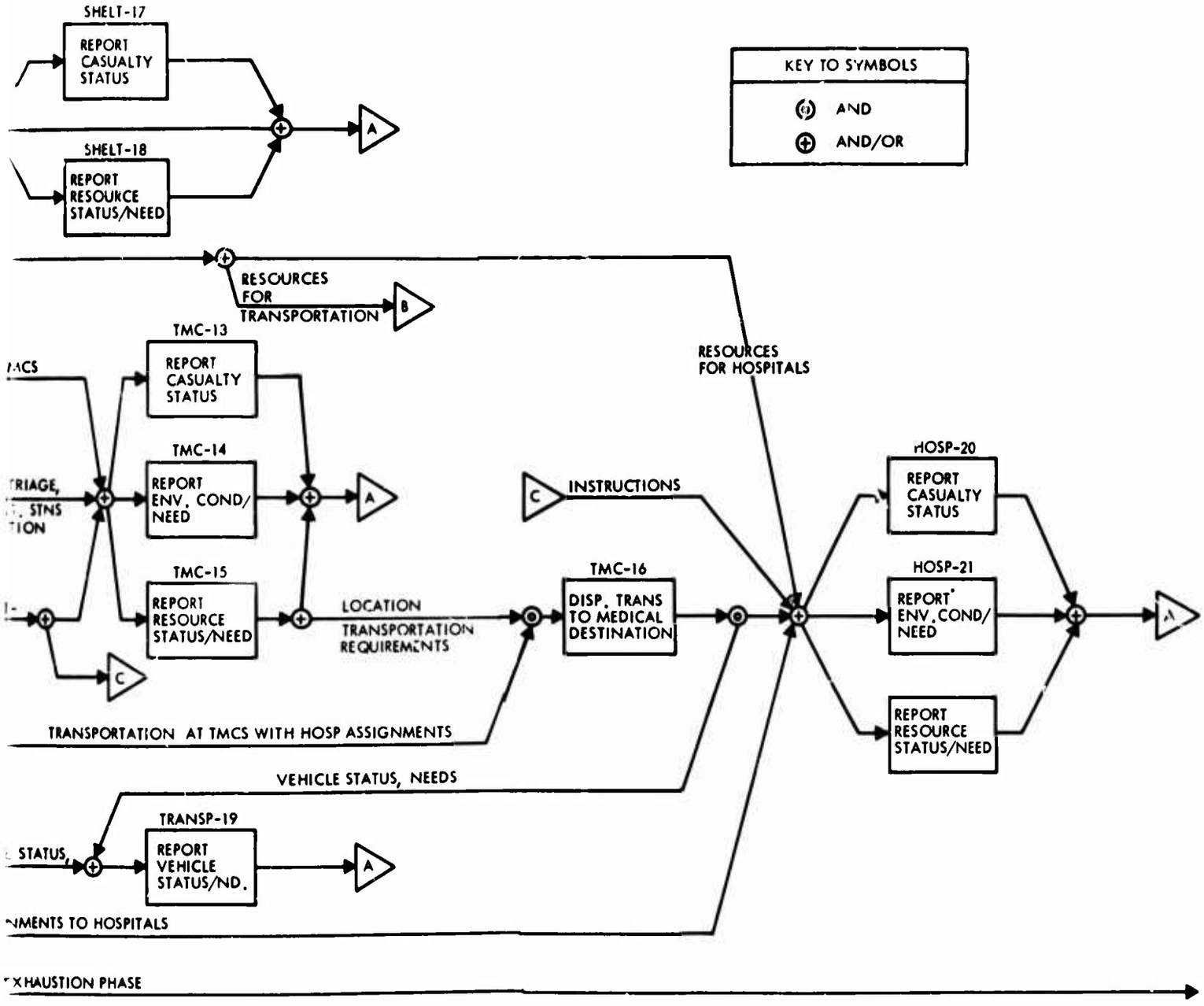

FIGURE 4. CONCEPTUAL EMCCS – OPERATIONAL PHASE

OPERATIONAL PHASE

1. MAINTAIN STATUS (Control Center)

Continual updating and posting of all status report shortages must be done throughout the entire post-disaster period (all three phases) to provide information on which CMC decisions and tactics will be based. Control Center will receive such information from Temporary Medical Centers, Hospitals, Transportation, Fallout Shelters, and all Support agencies and groups.

The CMC needs status information from all system elements in order to resolve multiple demands for limited resources and establish the allocation strategy most likely to attain system goals. Through communications with the TMC's the CMC can provide for appropriate transportation (e. g., ambulance, trucks or buses) and by reference to hospital status data and route information he can select the appropriate receiving hospital.

2. FORMULATE MEDICAL TACTICS (Central Medical Control)

Current status information from Function 1 and established disaster medical plans provide the framework within which CMC can formulate the operational tactics to achieve the EMCCS overall goal. Consideration of concentrations of casualties, pre-attack deployment of packaged disaster hospitals and casualty station supplies, availability of personnel, availability of hospital treatment space, and weather, street, and radiation conditions will result in such decisions as TMC locations, personnel assignments, preliminary casualty allocations among hospitals, transportation assignments, and initial needs for aid from support groups.

BLANK PAGE

Perhaps the most significant factors to influence mobilization of EMCCS field resources are the level and distribution of radioactive fallout. Total city exposure to high rates would prevent the system from activating at all; and slight exposure of small city areas to low or safe rates would allow rapid, complete implementation of plans and resources. The general case should fall somewhere in between these extremes and might take the form of both safe and dangerous rates distributed over many places within the urban area.

3. PROVIDE ADVICE TO SHELTERS (CMC)

Scattered high levels of radiation would prevent some fallout shelters from being opened, and the only form of CMC aid to shelter casualties would be verbal advice. Either spontaneously or in response to CMC interrogation, shelters will report Casualty Status (Function 17) and Resource Status and/or Needs (Function 18). Included will be any medical problems such as type of treatment and diagnosis. The CMC staff should be available to answer these questions to provide the most effective care under the severely constrained conditions.

4. DISPATCH NEEDED RESOURCES (CMC)

In response to requests for assistance, personnel, or other resources from any/every system element, CMC will send the needed resources to the element. Both requests for and status of available supplies will be outputs of Function 1. After evaluating requests, availability, and priorities of allocation, CMC will route resources to the appropriate destinations.

5. DISPATCH TMC PACKAGES (CMC)

CMC will evaluate Disaster, Casualty, Personnel, and Environmental Status, and pre-disaster deployment of stored Temporary Medical Care facilities (Function 1) to determine locations and number of TMC packages. CMC will then dispatch these packages and may require aid from various support groups (transportation, security, auxiliary personnel; see Function 6).

6. REQUEST SUPPORT AID (CMC)

Many times during this phase help from support groups will be required. Police route clearance and security for TMC's, Red Cross or other auxiliary personnel for various treatment locations, trucks and vehicles for casualty transport are examples of this type of aid. Function 1 will provide information on need for support assistance and, to a high degree, the support availability itself. CMC will contact the support group commander and request specific assistance (see Function 11).

7. PROVIDE INSTRUCTIONS FOR SUPPORT USE (CMC)

After support resources have been assigned to the EMCCS (Function 10), CMC will relay its plans for the use of the new resources to the appropriate medical element. Personnel can be assigned to hospitals or TMC's for use as litter bearers, vehicles can be dispatched to/from hospitals by the commanders at the sites, and supplies can be provided to back up regular medical material. These instructions will allow CMC to maintain coordination over the system, thus allowing optimum use of all support aid.

8. ALLOCATE CASUALTIES TO HOSPITALS (CMC)

Function 1 provides Hospital Status and Casualty Status information. Using these data CMC allocates groups of transportable casualties to hospitals. Transportation services are assigned to specific casualty groups and hospitals (Function 9), and the hospitals are notified of the type and number of casualties to expect.

9. DISPATCH TRANSPORTATION (CMC)

Transportation Status, requests for transportation, environmental conditions (all supplied from Function 1), and hospital casualty allocations (from Function 8) are utilized to make transportation assignments. CMC provides destination, routing, and purpose of assignment to vehicles as they are dispatched (see Function 19).

10. PROVIDE INFORMATION FOR NEWS MEDIA (CMC)

To avoid inaccurate news bulletins and resulting problems, the CMC staff will prepare medical information for release. Status data (from Function 1) will be used to generate casualty figures, TMC locations and availability, and positive instructions to the general public. When possible, rationale will accompany instructions to prevent detrimental situations from occurring (mass convergence, non-directed area clearance, etc.). (See Operational Parameters.) Once the information has been organized it will be forwarded to the overall disaster coordinator for subsequent distribution to broadcast stations.

11. FILL REQUESTS (Support)

Support group staffs receive requests for assistance from CMC (Function 6) throughout this phase of operations. After considering their own needs and available resources, the support staffs will assign personnel, material, or other aid to CMC. Support will be dispatched either with detailed instructions (via CMC support request) or simply to destinations with instructions to await their arrival (Function 7).

12. ESTABLISH TEMPORARY MEDICAL CENTERS (TMC)

When personnel assigned to TMC packages receive their dispatch commands from CMC (Function 5) they will proceed to the designated locations and organize equipment/personnel to begin operations. Each center (Primary Triage sites, Casualty Stations, Packaged Disaster Hospitals) will conduct its activities under the guidance and control of a physician, preferably one with experience in trauma, military or disaster medicine. As emphasized in the System Elements section the sorting process will be the most productive activity, in terms of optimum resource utilization, and will thus be performed at each of the TMC's as well as hospitals. Three communications functions result from and continue through TMC operations: Function 13 - Casualty Status, Function 14 - Environmental Conditions, and Function 15 - Resource Status.

13. REPORT CASUALTY STATUS (TMC)

Once the TMC is in operation (Function 12), as casualties arrive, the numbers and types of persons treated will be reported to CMC. This can be done spontaneously by the TMC, it can follow a predetermined periodic schedule, or it can occur in response to CMC interrogation. These alternatives should largely be resolved in

disaster plans. The data will be received and maintained at Control (Function 1) for overall coordination and subsequent release to news media.

14. REPORT ENVIRONMENTAL CONDITIONS AND/OR NEEDS (TMC)

Various environmental conditions can significantly affect TMC operations, and this information must be available to CMC for best overall use of the TMC's. In addition to the problem of radiation rates, inclement weather will dictate the need for shelter, light, and heat, nearby fire or flooding can produce much debris needing clearance for casualty access to the TMC's, and other environmental conditions can produce similar needs. Again, depending on plans (see also the following section on Communications Frequency) the timing of messages can vary among three alternatives.

15. REPORT RESOURCE STATUS AND/OR NEEDS (TMC)

Once TMC's are in operation (Function 12) the use and status of personnel, supplies, and transportation will change, and CMC must be apprised of these changes to insure smooth resupply, rotation of personnel, or assignment of transport vehicles. Thus, following a schedule, interrogation by CMC, or in response to significant changes/needs the TMC's will report this information to CMC (Function 1).

16. DISPATCH TRANSPORTATION TO MEDICAL DESTINATION (TMC)

Various groups of casualties will need transportation to several destinations: Casualty Stations, PDH's, or Hospitals. As the dispatched vehicles (Function 9) arrive, TMC commanders will instruct the drivers as to group and proper type of destination. Radio controlled vehicles will have specific destination information from

Function 9. In cases of non-radio controlled vehicles, TMC will supply both type and name of destination (e.g., Casualty group number 6 to Mercy Hospital, group number 7 to PDH at California High School).

17. REPORT CASUALTY STATUS (Shelters)

Shelters will report casualty information to CMC for purposes of overall post-attack operations control and release to news media for subsequent broadcast to the general public. This information, combined with that from Function 18 will be used by CMC in supply resources to the shelters (see Functions 3 and 4). Since shelter occupancy is limited, this function will be performed infrequently (see following section on Communications Frequency).

18. REPORT RESOURCE STATUS AND/OR NEEDS (Shelters)

Use of medical resources and any trained personnel within the shelter will form the basis of this function. Resource status and requests for assistance will be maintained by Control (Function 1) for subsequent assignment of fresh personnel and/or material. The radiation levels surrounding the shelters will limit the extent of aid rendered by CMC: it may be reduced to verbal advice (Function 3) or increased to dispatch of doctors and supplies (Function 4). Current OCD plans call for including monitoring equipment in fallout shelters and information from such monitoring will be maintained at Control to allow CMC (and other public safety groups) to devise tactics.

19. REPORT VEHICLE STATUS AND/OR NEEDS (Transportation)

Several types of vehicle status must be reported to CMC for efficient use of all vehicles: vehicle availability, location, acknowledgement of assignments, and casualty load. Information concerning

vehicle needs such as fuel, medical supplies, routing information, and security will also be reported to Control for posting (Function 1).

20. REPORT CAUSALTY STATUS (Hospitals)

Hospitals will transmit casualty types and levels to CMC for overall operations coordination and news media release. Several alternatives are available, as previously discussed in Function 13.

21. REPORT ENVIRONMENTAL CONDITIONS AND/OR NEEDS (Hospitals)

Again, as discussed in Function 14 for TMC's, hospitals will report local conditions or problems which could affect their medical operations. One action based on high radiation rate which is unique to hospitals is possible evacuation of staff, patients, and supplies to safe areas even before treatment of arriving casualties. Thus, this information will be reported very soon after initial alerting is received from Control.

22. REPORT RESOURCE STATUS AND/OR NEEDS (Hospitals)

To allow CMC to adequately replenish hospital supplies, equipment, and personnel, resource status and requirements information will be reported to Control throughout the post-attack operations. This function includes transmittal of Hospital Status information, used by CMC to allocate casualty loads to various facilities (Function 8). As with Function 18, there are alternate procedures for implementing this function.

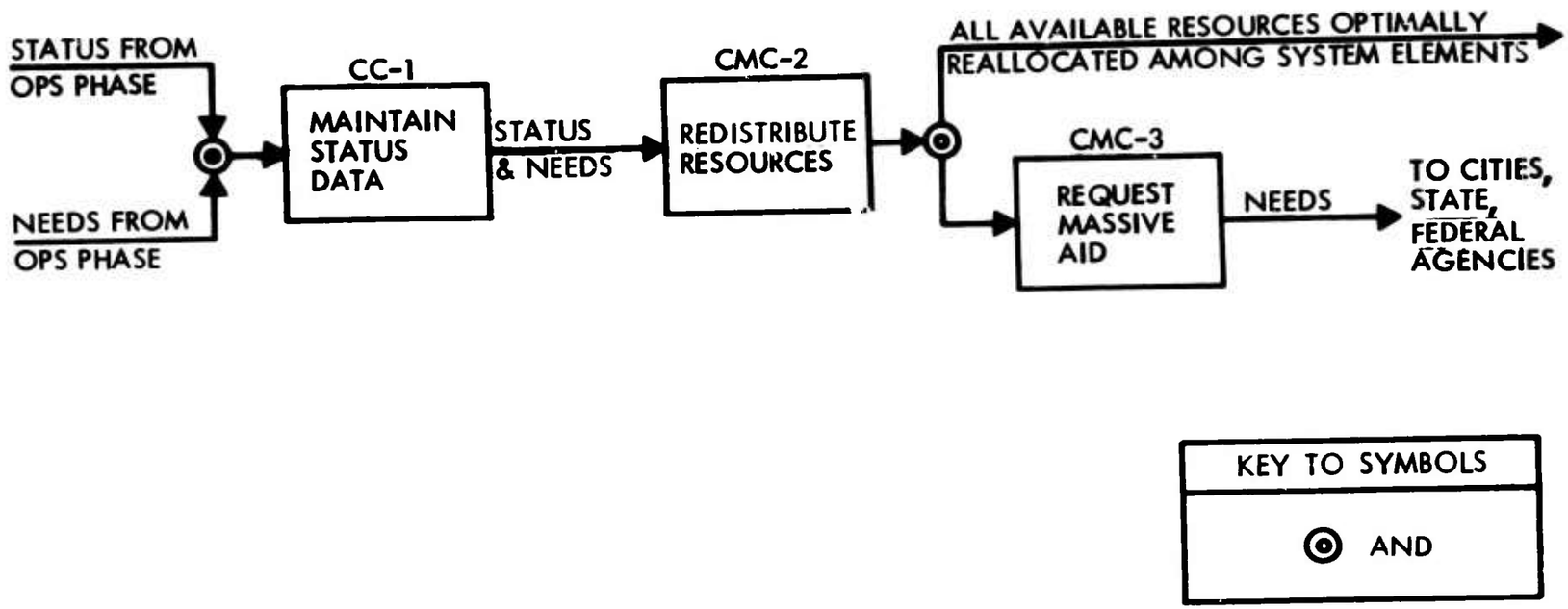

FIGURE 5. CONCEPTUAL EMCCS - RESOURCE EXHAUSTION PHASE

RESOURCE EXHAUSTION PHASE

1. MAINTAIN STATUS (Control Center)

This function is performed throughout all phases of post-attack operations to give CMC all information required to optimally utilize available resources.

2. REDISTRIBUTE RESOURCES (CMC)

Since medical supplies, personnel, treatment space, or other resources are not readily available, CMC has the task of evaluating all status reports and all requests for aid (from Function 1) and then optimally reallocating the existing resources among all system elements. This may involve transferring personnel, transferring medical supplies, and closing or consolidating treatment centers. The result of this function is a severely constrained EMCCS and a heightened need for massive aid from areas with surplus resources (see Function 2).

3. REQUEST MASSIVE AID (CMC)

This is an extension of Function 16 of the Operational Phase, REQUEST SUPPORT AID. Nearby, less attack-affected communities, State, and Federal agencies will be contacted and requested to give aid.

COMMUNICATIONS LINKS AND MESSAGE FREQUENCY DERIVATION

The following table lists the system contacts and the type of information which must be exchanged in order to perform the required functions. Factors which influence the frequency of message types are described for three time phases:

ALARM PHASE Describes the important factors which contribute to message frequency during the initial phase of the disaster, prior to the arrival of the Medical Coordinator at the medical Control Center. Estimated duration: ten minutes - one hour.

OPERATIONAL PHASE Describes the factors which contribute to message frequency subsequent to the arrival of the Medical Coordinator and implementation of the medical disaster plan as long as personnel, equipment, and supplies are readily available. Estimated duration: several hours to one week.

RESOURCE EXHAUSTION PHASE Describes the important factors which determine the frequency of communications when nearly all resources have been allocated throughout the entire medical response system. Available resources are supplied or redistributed to meet the most pressing needs.

Two additional factors in the structuring and use of the system are message type and message length. Message length is often determined by its content type and also by the means used to relay that content -- language or code. Generally, use of code produces shorter average length than does use of language. However, other considerations such as the type and number of personnel involved in the system and the size and character of any city's existing, day to day public safety communications system would require more data than this general study can provide to make the code versus language decision. Therefore, resolution of this problem should await the actual process of implementing an EMCCS in a particular city or metropolitan region.

Table 1. Factors Influencing Message Frequency

COMMUNICATION LINK	INFORMATION	ALARM PHASE	OPERATIONAL PHASE	RESOURCE EXHAUSTION PHASE
CMC COMMUNICATIONS TO SHELTERS	Medical Coordination: Specific medical advice regarding methods and procedures. Frequency of requests made by shelter. See SHELTER COMMUNICATIONS TO CMC.	Probably no requirement.	Frequency of communications coordinating needs and surpluses and arranging transfer is a function of: 1. Number of shelters, requirements for supplies (cf. SHELTER COMMUNICATIONS TO CENTRAL CONTROL) 2. Availability of medical supplies elsewhere.	Inter-shelter coordination requirements would tend to increase if other sources of supply are depleted. Thus, this message type should increase with time as a function of total injured and medical supplies in reserve.
SHELTER COMMUNICATIONS TO CMC	Casualty Status: Identification of dead and injured for release by central control agency.	No casualty status calls are expected from the shelter during this phase.	At this time dead and injured will have been sorted and shelters will begin reporting. Important determiners of message frequency will be: 1. Total number of shelters in use. 2. Total dead or injured—which is a partial function of proximity to nuclear blast (see Support Requirements below).	Same comments as for OPERATIONAL PHASE. However, since no new casualties are assumed to enter the shelter, the frequency of casualty status messages will be reduced this phase.
	Support Requirements: Requests for medical assistance in terms of advice, supplies or personnel. In a "worst" case, only advice via communications system can be rendered. In the case where shelters are accessible, both medical personnel and supplies can be given directly, if available.	Probably, no message of this type will be transmitted at this time.	During this phase first aid will be administered to injured civilians who have reached the shelter. During this period there would be the greatest requirement for communications with outside medical services. The frequency of communications to Central Control depends upon: 1. Total number of shelters in use. 2. Number and type of injuries would decrease in the order: burns, wounds and broken bones, radiation sickness, going away from the blast. Requirements for medical supplies and personnel also decrease in that order. Burns require more attention and bandages than wounds, and wounds require more supplies and attention than radiation	Requests for medical support should decrease at some point when all casualties have received as much care as can be provided in the shelter.

Table 1. Factors Influencing Message Frequency (Continued)

COMMUNICATION LINK	INFORMATION	ALARM PHASE	OPERATIONAL PHASE	RESOURCE EXHAUSTION PHASE
			injury. Hence, the need for support decreases with distance from ground zero. 3. Number of medical supplies and medical/paramedical personnel within the shelters relative to the type and number of injured.	
CMC COMMUNICATIONS TO TRANSPORTATION	Dispatch Command and Control (DC): Communicate specific assignments to emergency vehicle drivers.	Transportation alert by Control Center prior to CMC arrival.	During this period, vehicles will be dispatched to transport injured to hospitals and aid stations under direction of the CMC in an effort to maximize their utilization. Frequency of emergency vehicle dispatch will include the ALARM PHASE factors as well as: 1. Average trip length in time, as determined by average distance and speed. 2. Number of supplementary vehicles, e.g., public works trucks, taxicabs, and other vehicles as included in disaster plan. 3. Possibility for multiple dispatch, e.g., sent n trucks.	During this period all available vehicles will be in use and requests for medical vehicles will greatly exceed their availability. Dispatch communications will reach their maximum frequency and resolve to a function of: 1. Vehicle availability (as in OPERATIONAL PHASE). 2. Delays due to CMC decision requirements.
TRANSPORTATION COMMUNICATIONS TO CMC	Vehicle Status: Reports related to location and availability of medical transport vehicles.	Depending upon the particular disaster plan, emergency medical vehicles may be dispatched immediately to individually requested locations, or may be ordered to "stand by" status while awaiting the arrival of the designated individual(s) at the	Once dispatched, status information is required or medical vehicles at each transition, i.e., (1) enroute to pickup, (2) arrival at pickup point, (3) enroute to hospital or aid station, (4) arrival at ultimate destination, (5) available for dispatch. Such information allows the dispatcher to predict vehicle availability and location. Factors which affect the frequency of vehicle status reports are:	Frequency of vehicle status messages will be a function of the above factors plus indirect inputs from vehicles without radio.

Table 1. Factors Influencing Message Frequency (Continued)

COMMUNICATION LINK	INFORMATION	ALARM PHASE	OPERATIONAL PHASE	RESOURCE EXHAUSTION PHASE
		Control Center. In either case, current status information would be recorded at the center. Frequency of calls during this phase depends upon: 1. The number of independent agencies operating emergency medical vehicles.	1. Total number of radio controlled emergency medical vehicles. 2. Average trip duration, which is a function of city size, i.e., average distance traveled at average speeds.	
	Support Requirements Requests for fuel or other vehicle supplies, or street/routing security assistance. Requests for relief drivers would probably go directly to the parent agency. Traffic information would be most efficient if included in dispatch data.	Emergency medical vehicles would probably not require or request support at this time.	Support requirements would be requested by emergency medical vehicles as a function of: 1. Use rate —which is a function of average trip length (see TRANSPORTATION/VEHICLE STATUS OPERATIONAL PHASE). 2. Total number of emergency medical vehicles in operation. 3. Condition of roads, traffic and need for security assistance. 4. Need for fuel, repairs, or other assistance.	In general, the frequency of support requests should increase with time, but should be a function of the same factors as VEHICLE STATUS, OPERATIONAL PHASE.
CMC COMMUNICATIONS TO HOSPITAL	Support Requirements Notification to hospitals as to number of casualties to expect.	Notification of disaster and instructions to implement hospital disaster preparations with more information to come in OPERATIONAL PHASE.	Subsequent to routing ambulance vehicles to hospitals, the hospitals are notified as to the number and type of injured. The frequency of such calls will be at most equal to: 1. The number of trips of ambulances to hospitals. However, there will probably be less due to simultaneous vehicle routing to the same hospital.	At this point in the disaster the requirement for alerting hospitals may reappear since special arrangements must be made by hospitals already operating at capacity. Frequency of communications again becomes a function of factors discussed in the ALARM PHASE.

Table 1. Factors Influencing Message Frequency (Continued)

COMMUNICATION LINK	INFORMATION	ALARM PHASE	OPERATIONAL PHASE	RESOURCE EXHAUSTION PHASE
			During this phase, decisions related to assignment of emergency medical vehicles to hospitals will be based upon current hospital status maintained at the control center. After the initial alert, the hospitals can probably expect as many patients as they originally reported they could handle.	
HOSPITAL COMMUNICATIONS TO CMC	Hospital Status: Information of availability of beds, special treatment room space, and other space (cafeteria, conference rooms, corridors) for immediate treatment of casualties. Data needed at Control Center for optimum distribution of casualties throughout the medical system.	No CMC established, but should interrogate hospitals shortly after start of this phase to have data available when CMC arrives to take command. (cf. Casualty Status Information)	Space will be consumed and frequency of hospital-originated communications will vary directly with: 1. Number of hospitals 2. Number and type of casualties 3. Rate of casualty influx to hospitals 4. Proportion of casualties which must be kept at hospitals following treatment As with Casualty Status, disaster plans anticipating great masses of casualties converging on hospitals should establish a periodic, CMC generated interrogation schedule, flexible enough to cope with the above determinants, but regular enough to impose some order on the hospitals.	There will be very little need for communicating a "full" or "nearly full" condition to CMC. Rather, only upon a significant increase in available space will the hospitals contact the CMC.
	Casualty Status: Information on number, type, and identification of casualties and dead at hospitals. Basic to all subsequent planning by CMC since it directly affects consumable supplies, personnel utilization, and allocation of other resources.	Only a small number of casualties are expected to arrive at hospitals in this phase, and information can be given Control Center when it requests Hospital Status information. Probably, identification data will not be transmitted due	Casualties will rapidly fill hospitals as function of proximity to blast, size and community knowledge of hospitals, availability of transportation (official, private, foot), and availability of streets/routes. Communications frequency governed by 1. Number of hospitals 2. Total number of casualties 3. Rate of casualty influx to hospitals	Casualties may still be converging upon hospitals with little or no space or supplies to give them. Communications will again depend on: 1. Number of hospitals 2. Number of new casualties 3. Rate of new casualty convergence And, alternate plan of periodic interrogation is applicable.

Table 1. Factors Influencing Message Frequency (Continued)

COMMUNICATION LINK	INFORMATION	ALARM PHASE	OPERATIONAL PHASE	RESOURCE EXHAUSTION PHASE
		to excessive time requirements but will be maintained at hospital for later use, and only statistical data will be passed to Control Center. (cf. Hospital Status Information).	4. Rate at which hospital space is filled (from original space availability in ALARM PHASE). Alternate is periodic (one, two hour) interrogation of hospitals by CMC. Would allow periodic data collection in hospitals, and might more effectively allocate communications time and facilities.	
	Personnel Status and Support Requirements Current condition of medical personnel and needs for additional or replacement personnel.	Few, if any communications since hospitals will be at "normal" pre-attack levels of personnel. A request for AM/FM broadcast of personnel recall procedures may be given Control depending on degree of availability of normal telephone lines for personnel alerting by individual hospitals (probably via the "chain letter" concept).	Personnel needs will be for more trained people to cope with heavy inflow of casualties (largely dependent on proximity to blast). Communications frequency is based on 1. Effectiveness of personnel recall procedures 2. Rate of casualty inflow 3. Type of injuries 4. Number of casualties 5. Medical effectiveness of personnel (casualties/hour handled by personnel) 6. Health condition of medical personnel (length of time worked, accumulated radiation, lack of food and rest, etc.) 7. Availability of "normal" communications for hospital-generated personnel contact	Replacement of exhausted personnel will be major need. Both communications frequency and in-hospital personnel rotation plans will be based on (5) and (6) of OPERATIONS PHASE.
	General/Logistical Status and Support Requirements Reports of current levels of medical, sustentative, mechanical, or other supplies or equipment in use at hospitals and the needs for replenishment or repair of these items.	Few communications since supplies will be at "normal" pre-attack levels.	Medical supplies consumed at a rate corresponding to the rate of casualty influx and, perhaps, to a large number of similar injury types (burns, fractures). Status reports will either be answers to CMC interrogation and varying with	Most hospitals will need supplies or equipment in this phase, but continual requests for the few remaining supplies throughout the system will probably result in communications blocking rather than meeting of requirements. Thus, Supply Status/Needs messages

Table 1. Factors Influencing Message Frequency (Continued)

COMMUNICATION LINK	INFORMATION	ALARM PHASE	OPERATIONAL PHASE	RESOURCE EXHAUSTION PHASE
			1. Number of hospitals 2. Rate of casualty influx, etc. or will be combined with requests for more personnel on an as-needed basis (cf. Personnel Status Information).	in this phase should take the form of answers to CMC interrogation. Again, frequency will be determined by: 1. Number of hospitals 2. Number of untreated casualties at hospitals 3. Inflow rate of new casualties Operational Phase parameters along with constraints of this phase will govern messages: few additional resources available but high probability of additional casualties arriving at hospitals.
CMC COMMUNICATIONS TO TMC	Medical Coordination (MC): In response to requests from TMC.	See TMC COMMUNICATIONS TO CMC		
	General and Logistic Status (GLS): In conjunction with communications from TMC requesting support to allow the TMC to plan their activities with knowledge of the range and type of support available.	See TMC COMMUNICATIONS TO CMC		
TMC COMMUNICATIONS TO CMC	Temporary Medical Location, Weather, and Radiation Status and Related Support Requirements: Local conditions at triages, casualty stations, and packaged hospitals to permit CMC to expand or close existing centers, open additional ones, or keep the facilities at the existing level.	The TMCs will not be established until the OPERATIONAL PHASE.	Allows Central Control to assess needs for changing the number, capacity, or function of temporary medical centers, and related communications will depend upon: 1. Rate at which casualties converge. 2. Total number of casualties. 3. Rate and type of weather change. 4. Rate change and accumulated radiation dose. Radiation information may be supplied within the Control Center from a support agency (and thus not using medical communications), or it may be initiated by the	Factors listed in OPERATIONAL PHASE will continue to influence communications frequency, but by this time a considerable number of casualties may have died, and the need for body disposition will increase communications.

Table 1. Factors Influencing Message Frequency (Continued)

COMMUNICATION LINK	INFORMATION	ALARM PHASE	OPERATIONAL PHASE	RESOURCE EXHAUSTION PHASE
			TMC at regular intervals (e.g., one or two hours) as determined by overall disaster plans (cf. Personnel Status and Support Requirements).	
	Personnel Status and Support Requirements Current condition of medical personnel and needs for additional or replacement personnel to maintain or increase medical efficiency.	Temporary Medical Centers not established until OPERATIONAL PHASE.	The greatest needs will be for additional personnel to cope with the heavy influx of casualties (largely dependent upon the distance from the blast). The frequency of communications is affected by 1. Number and type of personnel originally dispatched relative to their need as determined by a. Rate of influx of casualties b. Type of injuries c. Number of casualties 2. Health and efficiency condition of personnel (length of time worked, accumulated radiation, lack of food and rest, etc.). (cf. Temporary Medical Location Status).	Replacement of exhausted personnel will be the major need of this phase, and communications will vary with items (1) and (2) above and, to a lesser degree, with item (1.a).
	General/Logistical Status and Support Requirements: Current levels of medical, sustentative, mechanical, or other supplies and equipment in use at the medical centers and the needs for replenishment of these items.	Temporary Medical Centers not established until OPERATIONAL PHASE.	Medical supplies will be consumed at a rate corresponding to the rate of casualty influx and, perhaps, a large number of similar injury types (e.g., burn victims). Status reports in this phase will either be answers to CMC interrogations (varying with the number of temporary and permanent medical centers, number of casualties, etc.) or combined with requests for more personnel on an as-needed basis. (cf. Personnel Status Information)	Most medical centers will have need for supplies/equipment in this phase, and constant requests to CMC should probably result in communications blocking rather than meeting of requirements. Thus, supply status/needs in this phase will take the form of answers to CMC interrogations to optimally allot or "squeeze out" the last remaining supplies among all medical centers. As above, the frequency will vary with: 1. Number of medical locations. 2. Number of untreated casualties at centers. 3. Rate of influx of new casualties.

Table 1. Factors Influencing Message Frequency (Continued)

COMMUNICATION LINK	INFORMATION	ALARM PHASE	OPERATIONAL PHASE	RESOURCE EXHAUSTION PHASE
	Vehicle Status and Support Requirements Information regarding casualty transportation status at temporary medical centers and needs of the centers for additional vehicles.	Temporary Medical Centers not established until OPERATIONAL PHASE.	Vehicle status information will be supplied Control Center on request to aid CMC in maintaining overall resource status (this will occur infrequently, probably as a result of some breakdown in CMC–Medical vehicle direct contact or in CMC–support vehicle indirect contact). Requests for more transportation will vary with 1. Number of transportable casualties. 2. Rate of influx of these casualties. 3. Number of available vehicles. 4. Length of vehicle cycles. 5. Number of Temporary Medical Centers.	The OPERATIONAL PHASE parameters will govern the communications in this phase, but with additional constraints of the phase itself–few additional resources available but the high probability of additional casualties arriving at the Temporary Medical Centers.
	Casualty Status Records of number, type, and identification of casualties and deceased at Temporary Medical Centers. This information allows CMC to send additional personnel/supplies to these centers with very heavy casualty influx and not waste them at centers with adequate personnel-casualty ratios.	Temporary Medical Centers not established until OPERATIONAL PHASE.	Casualty information will not be collected and maintained at TMC, but only statistics will probably be reported. A periodic reporting cycle (perhaps every two or four hours) can be established, depending on disaster plans, or casualty information can be sent along with other communications (supplies or personnel needs, e.g.,). The "as needed" frequency will be determined by 1. Rate of casualty influx to center. 2. Rate at which casualties can be sorted by medical personnel (this should be used to formulate the "regular" reporting frequency in disaster plans). 3. Number of Temporary Medical Centers.	Casualty status in this phase is more important than OPERATIONAL PHASE due to probable continued influx of casualties, but with static, "used up" conditions of resources. Some factors affect frequency, but more importance to CMC to optimally reallocate remaining resources throughout the system.

Table 1. Factors Influencing Message Frequency (Continued)

COMMUNICATION LINK	INFORMATION	ALARM PHASE	OPERATIONAL PHASE	RESOURCE EXHAUSTION PHASE
CMC COMMUNICATIONS TO PERSONNEL	Dispatch Command and Control: In the course of initiating and exercising the disaster plan, personnel will be altered and dispatched to specific operational locations.	Depending upon the disaster plan, either the "chain letter" telephone alerting concept may be used (if phone lines are usable), or the various agencies (hospitals, transportation, etc.) may request Control Center to issue an appeal via commercial radio facilities.	During this phase communications to medical personnel, in the general sense, will be for reassignment. The frequency of such calls partially measures the adequacy of the disaster plan relative to the requirements of the situation. For a reasonably well designed disaster plan personnel reassignments during this period should be few.	The heavy demands for medical and paramedical personnel will require decisions by the CMC as to their best utilization. Reassignments should increase during this period. Frequency of messages will be some fraction of the number of requests for personnel. (See Communications to CMC from Hospitals and TMC.)
CMC COMMUNICATIONS TO SUPPORT (LOCAL AND STATE POLICE, MILITARY)	Security Support Requirements: Requests to clear routes for medical personnel and vehicles (e.g., around treatment centers and hospitals) and to control crowds likely to gather around hospitals and treatment centers.	An Operational Area disaster plan typically assigns traffic control responsibility to the individual who operates in a similar capacity under non-disaster conditions. In California, the ranking Highway Patrol officer in the County assumes that responsibility for the Operational Area. In cities, the Police Chief would be responsible for traffic control. The disaster plan itself should direct the traffic control activities of police with regard to hospitals during the ALARM PHASE. Individual support requests would occur when CMC is established, in the OPERATIONAL PHASE.	Traffic clearance and routing information requests will begin during this phase. In all probability such calls will not require external communications since the recommended procedure is to centrally locate the disaster operation executives. However, if they are not physically grouped and external communication must be estimated, the frequency of requests will be a function of 1. Number of Temporary Medical Care centers established. 2. Number of different routes necessary to reach various hospitals or treatment centers (which depends in turn on number of such facilities and their proximity to one another). Messages would equal the numbers mentioned above if each requirement were handled independently. Since that is unlikely, message frequency will be less.	Message frequency during this phase may actually decrease since no new facilities can be developed. Only changes in resource allocation (e.g., moving a casualty station) would require different traffic support.

Table 1. Factors Influencing Message Frequency (Continued)

COMMUNICATION LINK	INFORMATION	ALARM PHASE	OPERATIONAL PHASE	RESOURCE EXHAUSTION PHASE
CMC COMMUNICATIONS TO SUPPORT	Support Requirements Requests for additional transportation service, supplies, equipment, or personnel. The recommended system provides for representatives of all operational elements to be physically located in the same facility, and thus able to talk directly to one another, thus eliminating external communications needs. To assess the additional communications burden where that concept is not employed, frequency factors are discussed here.	No additional support likely to be requested prior to using own medical resources.	Requests for support will be a direct function of the rate at which resources are used and the number of resources. For example, requests for additional vehicles for use as ambulances depend on the ratio of available-requested ambulances. The need for medical vehicles, supplies, and personnel are related to blast proximity. (cf. SHELTER COMMUNICATIONS TO CENTRAL CONTROL) At some point there will be no additional support available, and requests will stop.	Except for modifying current use of loaned equipment or personnel, requests for additional support should be reduced to requests for temporary assistance by personnel actively engaged in other disaster activities (e.g., rescue workers temporarily used to transfer medical supplies).
SUPPORT COMMUNICATIONS TO CMC	Environmental Conditions Information necessary to select casualty station or triage sites and vehicle routes, or modify them over time.	Only partial data will probably be obtained from officials at the scene. Data will be collected for the CMC prior to his arrival.	Information may be obtained by the CMC through shared status displays. Otherwise, EC data will be reported upon CMC's request. No direct communications from support units in the field to TMC in Control Center are anticipated.	Same comments as under OPERATIONAL PHASE.
	Disaster Status: The general picture of the disaster situation should be available to the CMC through shared status displays at the Control Center. Specific questions will be relayed through the particular parent agency (i.e., police, fire, public works). Frequency of specific requests depends on the adequacy of status displays to meet the CMC's needs.			
CMC COMMUNICATIONS TO DISASTER COORDINATOR (EOC COMMANDER)	The most efficient control of disaster operations can be exercised if the executive elements are physically centralized as in EOC. Physical problems in communication are minimized as are time delays. The communications between the CMC and the Disaster Coordinator, police and fire would, in the recommended system, be accomplished without resort to external communications.			
	Disaster Status - Support Requirements: Statements of current medical status, current and projected medical support requirements.	Reports of this type would probably be submitted periodically as prescribed in the disaster plan. However, the plan will undoubtedly allow supplementary requests of an emergency nature. A reasonable guess as to the frequency of reports would be every two hours, but varying with the severity of the disaster. Unscheduled requests for support would not appear in the ALARM PHASE but would increase over time.		

Table 1. Factors Influencing Message Frequency (Concluded)

COMMUNICATION LINK	INFORMATION	ALARM PHASE	OPERATIONAL PHASE	RESOURCE EXHAUSTION PHASE
	News Release Data: Includes casualty status and location of temporary medical care facilities.	Probably too early for accurate data to be available.	The location of temporary medical care facilities will be submitted to the Disaster Coordinator for periodic release over broadcast channels. Casualty status will be submitted to the Disaster Coordinator for release at his discretion.	Revisions to the list of Temporary Medical Care (TMC) Centers will be submitted to the Disaster Coordinator for broadcast. Frequency of submission will be a function of changes in number and location of TMC centers.
TMC COMMUNICATIONS TO TRANSPORTATION	Dispatch Command: Instructions to vehicle drivers to transport specific (groups of) casualties to hospitals, casualty stations. (While this is a direct, face to face communications, it is a factor in determining vehicle cycle times.)	Temporary Medical Centers not established until OPERATIONAL PHASE.	Instructions will be transmitted directly between medical and transportation personnel, and thus will not affect use of communications hardware. Frequency is determined by: 1. Number of movable casualties. 2. Frequency of vehicle arrivals at Temporary Medical Centers.	Same as OPERATIONAL PHASE but probably less frequent since transportation resources will be fully deployed among all medical locations.

BLANK PAGE

IMPLEMENTATION

The concept which provides for transporting medical personnel into the impact area to establish casualty stations is predicated on the assumption that they will not, as a consequence, receive a lethal dose of radiation. In the worst case, with high radiation levels throughout the city and survivors buttoned-up in fallout shelters, the only EMCCS implementation possible would be limited to communicating medical advice to shelterees.

Persons who are 10 to 50 miles from ground zero may suffer lacerations from broken glass. Persons who are up to 25 miles away may sustain flash burns. Depending on the type of blast, casualties will have a 30 to 90 minute grace period before fallout descends (ref. 12).

> These victims are likely to swamp existing hospitals, unless trained and taught to take a better course. ... If they go to hospitals unprepared to shelter them from fallout, they will probably die of fallout radiation. A better solution would be to have these victims go to shelters where advanced first-aid workers can stop bleeding... and give other life saving care.

The assumption which underlies the operational EMCCS concept is that each function will be implemented to the extent that it is not temporarily inhibited or modified by intense atomic radiation.

This report sets forth basic principles and general functional requirements for an EMCCS. Diversity in kind and number of variables which exist between cities precludes a universally valid and directly applicable EMCCS design. However, it is fully realized that the primary value of the EMCCS concept to the Office of Civil Defense is its ultimate utility. The task of implementing the EMCCS concept in terms of an

individual city's needs and capabilities is not an easy one. The purpose of this section is to suggest a general approach toward implementation which follows from our emphasis upon essential functions and requirements analysis.

Briefly stated, implementation of the operational EMCCS concept requires that functional equivalents of the system described herein be established within the context of the particular city. Functional equivalents of the system elements should be first designated. Communications links necessary to performance of essential functions are then drawn. And finally, communications resources are assigned to the links and the system is evaluated by assessing the effects of link degradation. The evaluation is conducted on the basis that a communications failure which results in the loss of control is critical and backup facilities may be indicated.

The scope of the research is limited to the derivation of an EMCCS operational employment based upon functional rather than physical system components. However, the discussion to follow takes each major function-group and suggests possible implementation considering such things as probable current commitments and projected changes.

DISASTER PLANS

The importance of planning was stressed in a preceding section (General Operational Parameters). It should be re-emphasized that any EMCCS plan must be included within the city's overall disaster operations plan. In order to be accepted, the plan must be endorsed by the responsible city officials and formally adopted as part of the general plan. The Santa Clara County (California) Medical Association has taken the initiative to independently develop specific disaster medical procedures which will be formally submitted to the County Board of Supervisors for approval and incorporation into any master plan. Ideally, implementation of the EMCCS plan should be a smooth transition from the normal routine. When possible personnel should be assigned to serve in a similar capacity for both routine and disaster operations. As mentioned earlier, ambulance dispatchers in Santa Clara would function in the same role during routine and disaster

situations. The importance of system training and exercise also has been stressed with the conclusion that the operational effectiveness of the EMCCS is significantly increased if it is embedded within the normal system. (See System Training and Exercise under General Operational Parameters.)

A disaster planning manual developed for the OCD states that the desired end result of a community's efforts to establish an emergency communications system (ref. 14):

> is the same for every community -- a communication system for each disaster situation which will permit all units involved, both primary and support groups, to communicate with any other unit through no more than one communications relay, and yet not overload any one channel.

That approach reflects the "general strategy" discussed by Lang and Lang which is plagued by coordination problems. On the other hand, "A specific strategy pre-supposes that the major elements in the situation can be predicted in advance", but suffers from some rigidity (ref. 18).

The type of planning endorsed by this report is development of a specific strategy, but one which includes procedures for non-normal situations. The plan focuses on the concept of central control.

CENTRAL CONTROL

Traditionally fire, police, public works and other city agencies have physically separate communications centers. During disaster operations inter-organizational coordination requires information transfer and discussion* between these groups. The burden on external communications would be reduced and the coordination requirements would be more effectively met if the communications centers were combined.

The Office of Civil Defense and many cities are supporting the Emergency Operations Center (EOC)concept. Over 2,000 cities in the United States have EOC's in operation or under construction (ref. 3).

---

*Coordination is an active process of give and take -- a process more quickly and easily executed face to face.

An optimum EMCCS should recognize the predictable trend toward city-operated EOC's and incorporate the concept into the design. That is not to say that every city, regardless of size, must have an EOC, but that the functions assigned to the EOC must be somehow performed if the system is to operate effectively.

For example, a hospital receiving injured can operate more effectively if it knows how many patients to expect over time. Whether that information is obtained by an EOC and relayed to the hospital or it is received by phone from the disaster site is irrelevant to some extent. Certainly, a small town with only one hospital might find it more cost effective to control medical operations directly from the hospital. In Travis County (Texas) the disaster plan places the medical headquarters at one of five hospitals (ref. 16). However, it is more often found that where more hospitals and aid stations are involved some method for coordinating the needs between disaster organizations is necessary. The EOC appears to be well suited to that function.

The function of medical command and coordination within the EOC or other disaster headquarters should be performed by personnel trained and/or experienced with administering emergency medical resources. The requirement for issuing medical advice demands that a physician be present at the headquarters. It is a moot question whether the CMC should be a practicing physician, a hospital director or a public health officer.

Local civil defense is largely composed of government employees for very real practical reasons. The public health officer is thus a prime candidate for the CMC post. However, the concept recommended by the Division of Health Mobilization of the U. S. Public Health Service

(ref. 29, that medical care is a function of Emergency Health Services in disasters, has been seriously questioned. It is argued that (ref. 16):

> Medical Services by their very nature revolve around a hospital. Any planning or organization for total community emergencies must, therefore, utilize the hospitals as the functioning agency during the planning and operational phases in preparation for the ultimate stress of naturally occurring disasters. Such medical services, however, cannot be placed within the province of health departments, since in the daily operation of these agencies the Health Officer does not function in an echelon fashion with the Hospital Administrator, the local hospital association, or the component medical society.

The problem of separating health and medical functions has been long recognized. But as one researcher has said, the problem may not have been solved often enough (ref. 21).

The traditional role of the Public Health Service in controlling diseases and sanitation would receive greatest emphasis subsequent to the treatment of acute injuries. It is recognized that the secondary epidemics which have frequently accompanied wars have killed more people than weapons (ref. 12). However, the EMCCS is more concerned with immediate emergency medical operations. Other OCD-sponsored studies have examined this area of concern (cf. ref. 23).

It is conceivable that the structure which has been designated to house the EMCCS Control Center may be destroyed by blast or become uninhabitable due to fallout contamination. An EOC or similar communications center which is in operation on a day-to-day basis and somewhat protected from blast and fallout (e.g., underground) would be a good choice of location for the CMC. However, since the Control Center is the heart of the EMCCS, it is important that alternative means be provided for performing the Control Center functions.

TEMPORARY MEDICAL CARE CENTERS

As stated at the beginning of this section, the dispatch of medical personnel into the disaster area should only be done when radiation levels permit. Full implementation of the EMCCS thus might be delayed for a few hours or for as much as two weeks.

In addition to strictly medical functions, the medical officer in charge of the Temporary Medical Care Center (TMC) serves as a communications point for exchange of information with the Disaster Control Center. The TMC could be a triage/casualty station, packaged disaster hospital, first aid station or fallout shelter.

As pointed out by Dr. Jackson, probably the ideal medical officer in charge at a disaster site is one with experience in military medicine or trauma (ref. 16). In any case, the disaster plan should designate how that position will be filled and include alternatives.

The location of the TMC at the disaster site is dictated by the requirements for triage or a casualty station. However, in nearly all cases one can expect that police or fire personnel will set up the initial on-site command post. Since the need for coordination between disaster organizations demands that their respective headquarters be integrated, the location should be selected with the requirements for a casualty station in mind. Plans for the integrated field command post should be well worked out in advance.

The New York City plan provides for a mobile Catastrophe Unit at each of the municipal hospital centers. Upon receipt of a disaster call from the borough communications bureau, the Catastrophe Unit proceeds to the scene and the medical officer in charge establishes

liaison with the Police Coordinator. The assignment and control of all medical personnel at the scene becomes the responsibility of the medical officer in charge (ref. 19). The Hampden District Medical Society (Massachusetts) plan calls for mobile disaster teams to be dispatched to disaster scenes from nearby hospitals (ref. 4). The Santa Clara County (California) Medical Association is recommending a similar procedure but with the added provision for a police vehicle to report to a designated hospital and transport a physician and nurse to the disaster scene.[1]

As the number of system elements and geographic area increases, the tactical aspect of central control should be delegated to field command posts. The function of the Medical Director of the EOC would then become largely one of coordination between needs of the various aid stations and hospitals.

COMMUNICATIONS

By focusing on functions and associated information transfer requirements, it is apparent that the need for communication and the information transferred are constant -- only the means are variable.

In the previous discussion of System Training and Exercise and throughout the report emphasis is placed on the fact that the EMCCS becomes more effective if emergency operations are simply an extension of normal procedures. Wherever possible, normal lines of communication should be used for emergency operations.

---

[1] Proposal by Santa Clara County Medical Society Medical Disaster Committee.

Most hospitals normally use the telephone as their sole communications device. Even the Seattle Hospital Radio System (see page 93) utilizes R. A. C. E. S. personnel to operate their radios and not full-time hospital personnel. A telephone system, if undamaged by the effects of a nuclear blast would appear to be the preferred means for fixed point to point communications. It is preferred because it is simple to operate, relatively troublefree and easily maintained, and is familiar to all potential users.

While the telephone might be preferred for the reasons listed above, the vulnerability of phone lines, especially those exposed above ground, requires that an EMCCS which employs the phones should have backup communications provisions when telephones are inoperative.

The two major objections to the use of telephone for disaster operations is their vulnerability to blast damage and potential jamming through overload. All indications are that communications traffic over normal phone lines will increase sharply subsequent to disaster impact. It is anticipated that such lines, if still in operation, would be jammed and unavailable for emergency utilization. In almost every disaster document studied, hospital phone lines were reported to be jammed. These shortcomings can be partially corrected by:

1. Placing phone lines underground.

2. Physically precluding unessential calls. In most United States cities the phone companies have installed what is called "Line Load Control" which consists of a master switch which, when thrown, allows outgoing calls to be placed only from priority listings such as physicians' exchanges, important city employees and officials, etc.[1]

---

[1] Personal communcation with Lyman Swan, San Jose City Telephone Engineer.

Still, essential functions which require communications ability should be assigned backup facilities that are not subject to the same types of interference which might degrade the primary system. The Santa Clara County (California) Communications Center has partial redundancy in the form of a mobile communications van. Destruction of the communications center would result in the loss of phone links, but the mobile van contains all the radio capability. Seattle, Washington has a number of Civil Defense Radio Vans which have radio contact with 22 hospitals.[1] Ideally, each radio van should be able to serve as backup to the net control station. Outside Tacoma and Seattle local disaster plans call for police cars with two-way radios to be assigned to hospitals as backup in case phones are unusable.[2]

Areas like San Jose and Santa Clara County (California) which have an ambulance dispatch radio frequency in operation might consider its utilization in meeting other EMCCS communications requirements. The number of radio frequencies available is limited and some large cities have difficulty in obtaining enough radio channels to accomplish routine functions. The City of Long Beach, California is developing a medical radio net and is making plans to join in the Los Angeles County medical net when it comes into being.[3] The stated purpose of the radio net is to:[4]

a. To permit more efficient operations by making available means for rapid contact between hospitals

---

[1] Personal correspondence with Edwin H. Lofquist, M. D., King County Washington Medical Society Disaster Committee, 14 November 1966.

[2] Paper by Edwin H. Lofquist, M. D., presented to Washington State Council for Disaster Medical Services, on Emergency Hospital Communications, 30 January 1966.

[3] Personal communication from E. R. Pershing, Department of Emergency Preparedness, City of Long Beach, California.

[4] Proposed Long Beach Medical Radio Net, Long Beach Department of Civil Defense, Long Beach, California

and other medical facilities, ambulances, and personnel who are members of the net.

b. To provide a means for coordinating the sharing of patient load between the various hospitals in case of disaster.

c. To assure an equitable distribution of supplies and available assistance when telephone communications are disrupted.

The Federal Communications Commission imposes certain requirements on those utilizing the medical frequency:[1]

> To be eligible for participation in the medical emergency radio net, a hospital must offer 24-hour service and have a capability of operating its radio station on a similar basis. An ambulance service must show that its services are available to all medical facilities involved in the net. Each hospital and ambulance service must make application for its respective station and obtain operator permits for personnel involved.

Research indicates that a major share of the confusion at hospitals results from inadequate communications with other hospitals and the disaster site (ref. 27). Minimum facilities for hospitals are protected, hard-wire, private phone lines between each hospital and CMC. Additional phone lines in form of a party line linking all hospitals, blood bank, and CMC allow simultaneous issuance of instructions from CMC to all other points. Procedures might be for initial alerting of hospitals in Alarm Phase by EOC over the hot line, and for hospitals to supply their status information individually via the private lines.

Optimum hospital facilities would include both phone lines and an on-line radio network. Using radio as a backup system is widely recommended to cope with situations resulting from destruction of

---

[1] Proposed Long Beach Medical Radio Net, Long Beach Department of Civil Defense, Long Beach, California.

normal and emergency telephone equipment and lines. However, unless radio is used on more than just a "test every Friday at 10:00 AM" basis, operational difficulties may result. Research has indicated that even personnel trained in radio communications (e.g., firemen) tend to increase message length in difficult situations, thereby blocking radio channels (ref. 27). And, untrained personnel may exhibit the same characteristics or "freeze" at the microphone, also blocking the channel.

Communications backup can be provided in the form of procedures for using facilities assigned to other functions or organizations. For example, communications between the CMC and a TMC might be accomplished using a police cruiser's radio at the TMC site.

A continuing requirement for communications exists between the Control Center and the TMC. One way of meeting that requirement would be to have the medical disaster team carry a two-way radio along with initial supplies. Packaged hospitals and casualty stations should include a radio tuned to a special medical disaster frequency or otherwise prepared to communicate with the Control Center.

Citizen band handy-talkies might be used to link the TMC with surrounding triage areas. The New York Police plan provides for the assignment of walkie-talkie radios to strategic locations within the disaster area, such as parking and staging areas, traffic control points, first aid station and ambulance parking area (ref. 19). Such instruments can significantly reduce the traffic over regular radio channels as was observed at a Mountain View, California hospital disaster drill.[1] However, the growing popularity of the citizen band radio may result in "jamming" by private citizens in some areas during disaster operations.

Local radio stations are quite cooperative and offer their broadcast capacility to civil defense personnel to make special broadcasts. In seriously damaged areas, public address trucks and bullhorns can be used to give instructions to victims, e.g., shelter and aid station locations.

---

[1] Author's conversation with Assistant Chief Robert Burns, Mountain View Fire Department, 1966.

It was noted earlier that the Seattle/Tacoma plan calls for R. A. C. E. S. personnel to operate hospital radios. The San Jose (California) plan utilizes R. A. C. E. S. operators to react to novel or unexpected communications requirements. Upon sounding of the alarm, R. A. C. E. S. personnel go "on the air" in a monitoring mode. Instructions from the EOC give specific assignments over the amateur bands. Other R. A. C. E. S. operators have pre-assigned roles as fallout shelter radio operators and report to their respective shelter managers (ref. 24). It is also reported that a hospital radio net is in use in the Milwaukee area and hospitals across the entire state of New Jersey have radio contact, but no mention is made of operator personnel (ref. 6).

JURISDICTIONAL PROBLEMS

In attempting to conceptualize the post-nuclear attack environment it becomes immediately obvious that the devastation will rarely be contained within any one city's boundary markers. Mutual aid agreements, though somewhat effective in the past, probably will not be adequate to the emergency wrought by a nuclear detonation. In a situation which demands more personnel and equipment than could possibly be mustered, it is imperative that maximum utility be made of those resources which are available. There is a clear implication that an EMCCS should not be developed for a city but rather for a geographic area.

However, cities are very unwilling to give up any part of their sovereignty to regional governmental or functional bodies. They typically feel they can provide at least adequate service to their residents, for example, in areas of police and fire protection, public health and sanitation, and public works. Nevertheless, since resources available to provide these services are directly related to size and wealth of the city, many smaller communities are financially unable to build physical facilities, hire competent personnel, and maintain well-operated

services. Thus, either the city suffers in one or more services or it combines with surrounding communities to effect economies of large scale operations. Many counties provide high quality services to their component cities on a contractual basis. Benefits accrue to the residents as a result of several cities' and the county's resources being combined.

In smaller or rural communities, plans and training should provide at least a framework of action to cope with disasters of greater magnitude than purely local incidents. For example, resources of several neighboring communities might have to be used to suppress a serious fire (as in the Fitchville, Ohio nursing home fire where confusion reigned, and over-response and suplication of effort characterized the rescue activities - ref. 9). Without coordination, planning and exercise resources are often wasted.

FUTURE WORK

This report has been primarily concerned with the development of an operational concept. While some suggestions have been offered relative to implementation, it remains for the individual city to interpret its specific hardware requirements.

Specific steps toward developing a disaster communications system such as determining equipment inventory, availability and vulnerability, etc. is described in another OCD document (ref. 14). However, the problem of determining exactly how many communications instruments of each type is necessary for a given city is especially difficult. Implementation of EMCCS in terms of specific equipment requires a number of contingency analyses by the subject city. That is, how will the equipment be affected by a general power failure or a utilities shut-down command? What percentage of the phone lines employed by the EMCCS are protected? What are the city-associated variables which affect communications requirements?

The information types and required communications links have been listed. To decide the appropriate communications means and the number of radio frequencies or phone lines which would be required by a given city subsequent to a nuclear attack, an estimate of communications traffic volume is necessary. The volume is determined by message length and frequency. These factors vary with each function, the user, whether voice or code is employed, number of system elements and whether they are interrogated or call as they deem necessary. The list could be carried much further. Many determiners of message frequency were included in Table 1. It is probably true that some factors are more important than others.

Probably the single most important variable affecting implementation of the optimal EMCCS concept is the potential resources available. A town with one hospital and one ambulance must perform the same functions as a larger city but the means may be quite different. An argument could be made for using the number of system elements as a gage of communications requirements. For example, if there is a requirement for ten aid stations, but personnel were available for only five the need for communications equipment would be determined, not by the requirement for aid stations, but rather the number actually deployed.

Ultimately, this area of research should provide the OCD with a general EMCCS model which accurately predicts the specific requirements of a particular city as a function of its general characteristics. The conceptual EMCCS developed in the current study is the first step in achieving that objective. However, it is a qualitative functional model based upon analytic research. It is important that it be quantified and empirically validated.

The attempts at modeling the EMCCS in the course of the present research have revealed the many parameters which affect system design. Thus, the basis has been established for developing a digital simulation model. After it is constructed, the simulation model can be used to determine communications effectiveness and the variable to which the conceptual EMCCS is sensitive (e.g., communication linkages, distribution of casualties, message frequency, message length, queues for communication lines, etc.).

The most appropriate context for validation would appear to be cities which are currently being studied by other OCD contractors. The application of the conceptual paradigm to these cities would make use of the community-descriptive parameters developed by previous investigators and would insure the fullest utility of the study.

Results of the study should be expressed in an algorithm form which can be used by individual city planners not only in designing a new EMCCS but also for assessing the degree of adequacy and effectiveness of any current system.

REFERENCES

1. Adams, David. The Minneapolis Tornadoes, May 6, 1965 Notes on the Warning Process, Working Paper #7, Disaster Research Center, Ohio State University, September 1965.

2. Adams, David. The 1965 Montreal Canada Apartment House Explosion: Some Notes and Comparisons with the Indianapolis, Indiana Coliseum Explosion, Research Note #12, Disaster Research Center, Ohio State University, July 1965.

3. American Medical Association, Committee on Disaster Medical Care, Quarterly Report on Disaster Medical Care, Vol. 2, No. 2, April 1966.

4. American Medical Association, Committee on Disaster Medical Care, Quarterly Report on Disaster Medical Care, Vol. 3, No. 1, January 1967.

5. American Medical Association, Summary of Proceedings, Fifteenth National Conference on Disaster Medical Care, Chicago, 1964.

6. American Medical Association, Summary of Proceedings, Sixteenth National Conference on Disaster Medical Care, Chicago, 1965.

7. Anderson, William A. Some Observations on a Disaster Subculture: The Organizational Response of Cincinnati, Ohio to the 1964 Flood. Research Note #6. Disaster Research Center, Ohio State University, June 1965.

8. Anderson, William. The Baldwin Hills, California Dam Disaster, Research Note #5, Disaster Research Center, Ohio State University, August 1964.

9. Anderson, William and Quarantelli, E. L. A Description of Organizational Activities in the Fitchville, Ohio Nursing Home Fire, Research Note #8, Disaster Research Center, Ohio State University, August 1964.

10. Bowers, Warner F. and Hughes, Carl W. Surgical Philosophy in Mass Casualty Management, Charles C. Thomas, Springfield, Illinois, 1960.

11. Fritz, C. W., Mathewson, J. H. Convergence Behavior in Disaster: A Problem in Social Control, National Academy of Sciences, National Research Council, Pub. 476, Washington D. C., 1957.

12. Garb, Solomon and Eng, Evelyn, Disaster Handbook, Springer Publishing Company, Inc., New York, 1964.

13. Haas, J. Eugene. Organizational Response to an Explosion at Medina AEC Base, San Antonio, Texas, November 13, 1963, Research Note #1, Disaster Research Center, Ohio State University, January 1964.

14. Haswell, D. B., et al, A Disaster Planning Manual for Small Communities, Bio-Dynamics, Inc., Cambridge, Massachusetts, April 1965.

15. Hundley, James, R., Jr. Some Research Questions and Planning Implications Raised by Observations Made at a Flood Threat in Laredo, Texas, and Nuevo Laredo, Mexico, September 25, 1964, Research Note #9, Disaster Research Center, Ohio State University, January 1965.

16. Jackson, Francis, C., M. D., "Disaster Medical Care", Symposium on Emergency Operations, Robert C. Bricston, editor, System Development Corporation, SP-2579, Santa Monica, 1 September 1966.

17. Kennedy, Will C. Some Preliminary Observations on a Hospital Response to the Jackson, Mississippi Tornado of March 3, 1966. Working Paper #9, Disaster Research Center, Ohio State University, June 1966.

18. Lang, Kurt and Lang, Gladys E., "Planning for Emergency Operations," Symposium on Emergency Operations, Robert C. Bricston, editor, System Development Corporation, SP-2579, Santa Monica, 1 September 1966.

19. New York City Police Department, Operations Manual for Disasters, New York, 1962.

20. Quarantelli, Enrico, Mass Behavior and Governmental Breakdown in Disasters: Viewpoint of a Researcher, Paper 1964-2, Disaster Research Center, Ohio State University, 1964.

21. Rainey, C. "Discussion of Papers on Planning," Symposium on Emergency Operations, Robert C. Bricston, editor, System Development Corporation, SP-2579, Santa Monica, 1 September 1966.

22. Raker, J. W., et al, Emergency Care In Disasters, National Academy of Sciences, National Research Council, Washington, D. C., 1958.

23. Salmon, Raphael J. Environmental Health Planning for Postattack Conditions: Some Problems, Programs, and Priorities, Final Report R-OU-197, Research Triangle Institute, Durham, North Carolina, April 1966.

24. San Jose City, RACES Operating Manual, San Jose, California, 1 October 1964.

25. San Jose City Health Department, Disaster Nursing Handbook, February 1962.

26. Santa Clara County Medical Society, Medical Catastrophic Disaster Plan for Santa Clara County, 2 December 1963.

27. Spencer, V. H., et al, Trans-attack and Post-attack Communications Requirements for Fire-fighting Operations and Control, Final Report, TR 3-66-19 (U), Serendipity Associates, Chatsworth, California, June 1966.

28. United States Army Early Medical Management of Mass Casualties in Nuclear Warfare, Technical Bulletin M. E. D. 246, 12 October 1955.

29. United States Public Health Service, Community Emergency Health Preparedness, Publication No. 1071-A-2, Washington, D. C., 1964.

30. United States Public Health Service, Establishing the Packaged Disaster Hospital, Publication No. 107-F-1, Washington, D. C. 1966.

31. United States Public Health Service, Hospital Planning for Nuclear Disaster, Publication No. 107-G-1, Washington, D. C. 1965.

32. Yutzy, Daniel. Authority, Jurisdiction and Technical Competence, Interorganizational Relationships at Great Falls, Montana, During the Flood of June 8-10, 1964, Research Note #7, Disaster Research Center, Ohio State Universtiy, September 1964.

33. Yutzy, Daniel. Contingencies Which Affect Medical Care in Disasters: An Informal Report, Disaster Research Center, Ohio State University, Paper 1964-3, 15th National Conference on Disaster Medical Care, Chicago, Illinois, November 8, 1964.

34. Yutzy, Daniel. Some Organizational and Community Activities After an Explosion at the Thompson Chemical Company, Attleboro, Massachusetts, Research Note #2, Disaster Research Center, Ohio State University, April 1964.

UNCLASSIFIED
Security Classification

DOCUMENT CONTROL DATA - R&D
(Security classification of title, body of abstract and indexing annotation must be entered when the overall report is classified)

1 ORIGINATING ACTIVITY *(Corporate author)* SERENDIPITY ASSOCIATES 199 First Street Los Altos, California	2a REPORT SECURITY CLASSIFICATION UNCLASSIFIED 2b GROUP

3 REPORT TITLE
An Operational Concept of an Emergency Medical Command and Communications System — Final Report

4 DESCRIPTIVE NOTES *(Type of report and inclusive dates)*
Final Report —

5 AUTHOR(S) *(Last name, first name, initial)*
Shoemaker, Richard E.
Korn, Barry

6 REPORT DATE February 1967	7a TOTAL NO OF PAGES 104	7b. NO OF REFS 34
8a CONTRACT OR GRANT NO N0022866C1616 b PROJECT NO OCD No. 2422A c d	9a ORIGINATOR'S REPORT NUMBER(S) TR-44-67-1 (U) 9b. OTHER REPORT NO(S) *(Any other numbers that may be assigned this report)* USNRDL-TRC-67-12	

10 AVAILABILITY/LIMITATION NOTICES
Distribution of this document is unlimited.

11 SUPPLEMENTARY NOTES	12 SPONSORING MILITARY ACTIVITY U. S. Naval Radiological Defense Laboratory San Francisco, California 94135

13 ABSTRACT
An operational concept for an Emergency Medical Command and Communications System (EMCCS) is derived from an analysis of natural disaster reports and the anticipated conditions attending a nuclear attack. A conceptual EMCCS model is described in terms of system elements, types of information circulated, communications links and traffic load determinants. A general approach to implementation of an EMCCS is described with a brief discussion of constraints imposed by current commitments and projected changes. The importance of validating the conceptual EMCCS is discussed and future research is suggested.

DD FORM 1 JAN 64 1473 0101-807-6800

UNCLASSIFIED
Security Classification

UNCLASSIFIED

Security Classification

14 KEY WORDS	LINK A ROLE	LINK A WT	LINK B ROLE	LINK B WT	LINK C ROLE	LINK C WT
Emergency Medical Command & Communications System (EMCCS)						
Systems Analysis of EMCCS						
Conceptual model of EMCCS						
Disaster operations						

INSTRUCTIONS

1. ORIGINATING ACTIVITY: Enter the name and address of the contractor, subcontractor, grantee, Department of Defense activity or other organization *(corporate author)* issuing the report.

2a. REPORT SECURITY CLASSIFICATION: Enter the overall security classification of the report. Indicate whether "Restricted Data" is included. Marking is to be in accordance with appropriate security regulations.

2b. GROUP: Automatic downgrading is specified in DoD Directive 5200.10 and Armed Forces Industrial Manual. Enter the group number. Also, when applicable, show that optional markings have been used for Group 3 and Group 4 as authorized.

3. REPORT TITLE: Enter the complete report title in all capital letters. Titles in all cases should be unclassified. If a meaningful title cannot be selected without classification, show title classification in all capitals in parenthesis immediately following the title.

4. DESCRIPTIVE NOTES: If appropriate, enter the type of report, e.g., interim, progress, summary, annual, or final. Give the inclusive dates when a specific reporting period is covered.

5. AUTHOR(S): Enter the name(s) of author(s) as shown on or in the report. Enter last name, first name, middle initial. If military, show rank and branch of service. The name of the principal author is an absolute minimum requirement.

6. REPORT DATE: Enter the date of the report as day, month, year, or month, year. If more than one date appears on the report, use date of publication.

7a. TOTAL NUMBER OF PAGES: The total page count should follow normal pagination procedures, i.e., enter the number of pages containing information.

7b. NUMBER OF REFERENCES: Enter the total number of references cited in the report.

8a. CONTRACT OR GRANT NUMBER: If appropriate, enter the applicable number of the contract or grant under which the report was written.

8b, 8c, & 8d. PROJECT NUMBER: Enter the appropriate military department identification, such as project number, subproject number, system numbers, task number, etc.

9a. ORIGINATOR'S REPORT NUMBER(S): Enter the official report number by which the document will be identified and controlled by the originating activity. This number must be unique to this report.

9b. OTHER REPORT NUMBER(S): If the report has been assigned any other report numbers *(either by the originator or by the sponsor)*, also enter this number(s).

10. AVAILABILITY/LIMITATION NOTICES: Enter any limitations on further dissemination of the report, other than those imposed by security classification, using standard statements such as:

(1) "Qualified requesters may obtain copies of this report from DDC."

(2) "Foreign announcement and dissemination of this report by DDC is not authorized."

(3) "U. S. Government agencies may obtain copies of this report directly from DDC. Other qualified DDC users shall request through _____."

(4) "U. S. military agencies may obtain copies of this report directly from DDC. Other qualified users shall request through _____."

(5) "All distribution of this report is controlled. Qualified DDC users shall request through _____."

If the report has been furnished to the Office of Technical Services, Department of Commerce, for sale to the public, indicate this fact and enter the price, if known.

11. SUPPLEMENTARY NOTES: Use for additional explanatory notes.

12. SPONSORING MILITARY ACTIVITY: Enter the name of the departmental project office or laboratory sponsoring *(paying for)* the research and development. Include address.

13. ABSTRACT: Enter an abstract giving a brief and factual summary of the document indicative of the report, even though it may also appear elsewhere in the body of the technical report. If additional space is required, a continuation sheet shall be attached.

It is highly desirable that the abstract of classified reports be unclassified. Each paragraph of the abstract shall end with an indication of the military security classification of the information in the paragraph, represented as *(TS)*, *(S)*, *(C)*, or *(U)*.

There is no limitation on the length of the abstract. However, the suggested length is from 150 to 225 words.

14. KEY WORDS: Key words are technically meaningful terms or short phrases that characterize a report and may be used as index entries for cataloging the report. Key words must be selected so that no security classification is required. Identifiers, such as equipment model designation, trade name, military project code name, geographic location, may be used as key words but will be followed by an indication of technical context. The assignment of links, roles, and weights is optional.

UNCLASSIFIED

Security Classification