AD651802

ARL 66-0233
NOVEMBER 1966

Aerospace Research Laboratories

ESTIMATION OF THE LOCATION PARAMETERS OF THE PEARSON TYPE III AND WEIBULL DISTRIBUTIONS IN THE NON-REGULAR CASE AND OTHER RESULTS IN NON-REGULAR ESTIMATION

W. R. BLISCHKE
A. J. TRUELOVE
P. B. MUNDLE
M. V. JOHNS, JR.
C-E-I-R, INCORPORATED
BEVERLY HILLS, CALIFORNIA

Contract No. AF 33(615)-3152
Project No. 7071

MAY 22 1967

Distribution of this document is unlimited

OFFICE OF AEROSPACE RESEARCH
United States Air Force

ARCHIVE COPY

133

NOTICES

When Government drawings, specifications, or other data are used for any purpose other than in connection with a definitely related Government procurement operation, the United States Government thereby incurs no responsibility nor any obligation whatsoever; and the fact that the Government may have formulated, furnished, or in any way supplied the said drawings, specifications, or other data, is not to be regarded by implication or otherwise as in any manner licensing the holder or any other person or corporation, or conveying any rights or permission to manufacture, use, or sell any patented invention that may in any way be related thereto.

- - - - - - - - - -

Qualified requesters may obtain copies of this report from the Defense Documentation Center, (DDC), Cameron Station, Alexandria, Virginia. All others should apply to the Clearinghouse for Scientific and Technical Information.

ACCESSION for
CFSTI WHITE SECTION
DDC BUFF SECTION
UNANNOUNCED
JUSTIFICATION
BY
DISTRIBUTION/AVAILABILITY CODES
DIST. AVAIL. and/or SPECIAL
1

- - - - - - - - - -

- - - - - - - - -

Copies of ARL Technical Documentary Reports should not be returned to Aerospace Research Laboratories unless return is required by security considerations, contractual obligations or notices on a specified document.

600 - March 1967 - C0192-24-536

BLANK PAGE

ARL 66-0233

ESTIMATION OF THE LOCATION PARAMETERS OF THE PEARSON TYPE III AND WEIBULL DISTRIBUTIONS IN THE NON-REGULAR CASE AND OTHER RESULTS IN NON-REGULAR ESTIMATION

by

W. R. BLISCHKE
A. J. TRUELOVE
P. B. MUNDLE
M. V. JOHNS, JR.

C-E-I-R, INC.
BEVERLY HILLS, CALIFORNIA

NOVEMBER 1966

Contract AF 33(615)-3152
Project 7071

Distribution of this document is unlimited

AEROSPACE RESEARCH LABORATORIES
OFFICE OF AEROSPACE RESEARCH
UNITED STATES AIR FORCE
WRIGHT-PATTERSON AIR FORCE BASE, OHIO

FOREWORD

This Interim Technical Documentary Report was prepared by personnel of the Applied Research and Management Sciences Division of C-E-I-R, INC., including Dr. W. R. Blischke, Mr. A. J. Truelove and Mr. P. B. Mundle of the Los Angeles Center and Dr. M. V. Johns, Jr. of the Los Altos Office. The research reported herein was conducted under Contract Number AF 33(615)-3152; more complete results of this continuing investigation will be reported in a Final Technical Documentary Report. This contract is a part of Project 7071, Research in Applied Mathematics. The contract monitor is Dr. H. Leon Harter, of the Aerospace Research Laboratories. His valuable suggestions and continued interest in and encouragement of this research are very much appreciated.

ABSTRACT

The project is a continuation of research on problems in non-regular estimation reported in ARL Technical Documentary Report No. ARL 65-177(1965). Included in that report was a lower bound on the variance of unbiased estimators of the location parameter of the Pearson Type III distribution, applicable in the non-regular case. This report includes the results of a numerical investigation of that bound for varying values of the shape parameter of the Type III distribution and varying sample sizes. The bound is apparently of the correct order of magnitude in a certain region of the parameter space but sub-optimal elsewhere. Approximations to the Pitman estimators for location parameters are investigated for both the Pearson Type III and Weibull distributions. In both cases, the minimum observation apparently contains the major part of the information concerning the unknown location parameter. Some results on the non-regular estimation problem, particularly concerning the derivation of variance bounds, in the cases of densities with bounded domain depending on an unknown parameter and of mixtures of uniform distributions, are also discussed.

TABLE OF CONTENTS

		PAGE
1.	INTRODUCTION AND SUMMARY	1
2.	VARIANCE BOUNDS FOR ESTIMATORS OF THE LOCATION PARAMETER OF THE PEARSON TYPE III DISTRIBUTION	4
	2.1 Previous Results	4
	2.2 Numerical Methods for Investigation of the Variance Bound	7
	2.3 Numerical Results	14
	2.4 Generalization of the Bound	23
3.	APPROXIMATIONS TO THE PITMAN ESTIMATOR FOR THE TYPE III DISTRIBUTION	27
	3.1 Pitman's Estimation Technique	27
	3.2 Approximations; Application to the Type III Distribution	29
	3.3 Approximations of Small Order	35
	3.4 Comparison of the Estimators	41
4.	APPLICATION OF THE APPROXIMATIONS OF THE PITMAN ESTIMATOR TO THE WEIBULL DISTRIBUTION	46
5.	ADDITIONAL RESULTS ON MINIMUM VARIANCE BOUNDS	51
	5.1 Construction of a Bound for Densities with Finite Domain	51
	5.2 Estimation for a Mixture of Two Uniform Distributions	56
REFERENCES		63
APPENDIX - COMPUTER PROGRAM FOR CALCULATION OF BOUND		64

LIST OF TABLES

		PAGE
Table 2.1	Summary of Variance Bound Numerical Results	15
Table 2.2	Comparison of Maximum Variance Bounds Attained with p Set Equal to 1, and with p Unrestricted	19
Table 3.1	Coefficients, c_{im}, for m = 2, 3 and 4, in Linear Approximations to the Pitman Estimator for the Pearson Type III Distribution	43
Table 3.2	Asymptotic Variances and Relative Efficiencies of the Approximations to the Pitman Estimator for the Pearson Type III Distribution	44
Table 4.1	Coefficients, c_{im}, in the Linear Approximation to the Pitman Estimator for the Weibull Distribution	49

LIST OF ILLUSTRATIONS

		PAGE
Figure 2.1	Variance Bound Times $n^{2/\alpha}$ for $\alpha \leq 2$, Times n for $\alpha \geq 2$	18
Figure 2.2	Maximizing Values, (p,nh), for Variance Bounds in the Non-Regular Case	21
Figure 2.3	Maximizing Values, (p,nh), for Variance Bounds in the Regular Case	22
Figure A-1	Flow-Chart for MAIN Routine	70
Figure A-2	Flow-Chart for FUDGIT Routine	71
Figure A-3	Flow Chart for VAR Routine	73
Figure A-4	Flow-Chart for GETALL Routine	73
Figure A-5	Flow-Chart for TAPEIN Routine	74
Figure A-6	Program Flow-Chart	75
Figure A-7	Standard Input Form	76

1. INTRODUCTION AND SUMMARY

An estimation problem in which the conditions, on the underlying probability distributions, given by Cramér [6, Section 33.3] are not satisfied is called a problem in non-regular estimation. It is from conditions such as those given by Cramér that follow the well-known asymptotic properties of maximum likelihood estimators and of the large class of estimators, known as BAN estimators, which are asymptotically equivalent to maximum likelihood. When the regularity conditions are not satisfied, it often happens that the estimation problem is not amenable to any of the standard approaches which might provide at least a straightforward asymptotic solution such as that provided by the theory of maximum likelihood in the regular case. In such situations, problems of considerable analytical complexity are encountered.

In a previous work [2], investigations of several aspects of the problem of non-regular estimation, including a number in the latter category, were reported. This report is concerned with additional results on non-regular estimation, including continuations of some studies initiated under the previous project as well as some new studies. As reflected in the title of this report, the major part of the effort in this project, and consequently the majority of the results, are concerned with estimation of the location parameter, in the non-regular case, of the Pearson Type III and Weibull distributions.

In the regular case, the BAN estimators are consistent, asymptotically normally distributed and asymptotically efficient in the sense

---

Manuscript released by authors November, 1966 for publication as an ARL Interim Technical Documentary Report.

that no other asymptotically normal estimator has an asymptotic distribution with smaller variance. Some or all of these results may fail to hold in the non-regular case. This is true for a non-trivial subset of the parameter space for both the distributions of interest to this investigation. In fact, in certain regions the likelihood function is unbounded. One must, therefore, necessarily seek alternative estimators. In this search we use the property of minimum variance as our criterion of optimality, although it is recognized that this choice is subject to criticism in the absence of at least asymptotic normality.

In attempting to construct minimum variance estimators for location parameters of the Weibull and Type III distributions, it was discovered that not only did the regularity conditions not hold, but most of the standard techniques for constructing lower bounds on the variance of estimators led to trivial results. In general, except for a few special cases, for example cases where a complete sufficient statistic exists, this further complicates the estimation problem. A substantial part of our previous effort [2] was devoted to the construction of new bounds which would yield non-trivial results for the non-regular case of the Weibull and Type III distributions. The bounds obtained were found to be analytically quite complex. For this reason, a numerical investigation of the bounds was initiated for the Type III distribution. This investigation has been extended considerably. The results, to be discussed in detail below, are somewhat mixed. It appears that the bound is quite good, i.e., is essentially attainable for a part of the parameter space but, while non-trivial, is also non-optimal elsewhere.

Some additional analytical results concerning lower bounds on the variance for the Type III distribution are also given. These include

the derivation of a generalization of the bound given previously. The generalization is even more complex than the original and has not been investigated numerically.

An investigation of the estimation problem itself has also been initiated. The approach pursued is to approximate an estimator proposed by Pitman [11]. The Pitman estimator of a location parameter, although known to be optimal in a number of respects, including minimum variance, is quite intractable for the distribution in question. Thus an analytical investigation requires some form of approximation. The approximations used appear to yield quite reasonable results.

A similar investigation of the Pitman estimation technique has been initiated in the case of the Weibull distribution. In the Weibull case, since exact moments of the order statistics are available, certain approximations in the derivation of the Pitman-type estimator, necessary in the Type III case, can be avoided. Preliminary results indicate that the Weibull case is quite similar to the Pearson Type III.

Finally, some miscellaneous additional results on the construction of variance bounds are discussed. These include bounds for densities with finite domain and specifically for mixtures of rectangular distributions.

2. VARIANCE BOUNDS FOR ESTIMATORS OF THE LOCATION PARAMETER OF THE PEARSON TYPE III DISTRIBUTION

Let $X_1, \ldots, X_n$ be independent random variables, each having a Pearson Type III distribution

$$(2.1) \qquad f(x) = \frac{1}{\beta\Gamma(\alpha)}\left(\frac{x-a}{\beta}\right)^{\alpha-1} e^{-(x-a)/\beta} \qquad x > a$$

$$= 0 \qquad \text{otherwise,}$$

where $-\infty < a < \infty$ and $0 < \alpha, \beta < \infty$. It is assumed that the scale parameter, β, and the shape parameter, α, are known. The problem is to estimate the location parameter, a, in the non-regular case, that is, when $\alpha \leqq 2$. In the ensuing discussion $Y_1, \ldots, Y_n$ will be taken to be order statistics of a sample of size n from the Type III distribution.

Before considering the problem of constructing estimators for a, we shall present some results, mostly numerical, concerning lower bounds on the variance of such estimators. We begin with a brief summary of previous work on this problem which was reported in reference [2].

2.1 Previous Results

Since in the non-regular case of the Pearson Type III distribution

$$(2.2) \qquad -\int_a^\infty \frac{\partial^2 \log f(x)}{\partial a^2}\, dx = \infty ,$$

the Cramér-Rao bound becomes the trivial inequality $V(t) \geqq 0$, where t is any unbiased estimator of a. Alternative methods for obtaining lower bounds on the variance must therefore be investigated.

Blischke, et al. [2] discussed application of several alternatives to the problem at hand. The notation used is as follows: $X_1, \ldots, X_n$

are assumed to be identically distributed random variables with common density $f(x,\theta)$, where $\theta = (\theta_1,\ldots,\theta_s)$ is an s-dimensional parameter with θ_1 unknown. The function $t = t(X_1,\ldots,X_n)$ is an unbiased estimator of θ_1. (Although this discussion is limited to unbiased estimators, the results can be generalized in an obvious way to yield lower bounds on the mean square error of biased estimators. In fact, in the sequel we shall not be particularly concerned with the question of bias. Since the generalization is obvious, we shall avoid unnecessary complications by considering only the unbiased case at present.) The density f is assumed to belong to some family of densities, $\mathcal{F}$, indexed by the parameter θ belonging to a set Θ. We define

$$(2.3) \qquad H = \left\{h \,\middle|\, (\theta_1+h,\theta_2,\ldots,\theta_s) \in \Theta\right\},$$

$$(2.4) \qquad P = \left\{p \,\middle|\, \text{there exists a function } k(\theta) \text{ such that } k(\theta)f^p(x,\theta) \in \mathcal{F}\right\},$$

and

$$(2.5) \qquad H\circ P = \left\{(h,p) \,\middle|\, kf^p(x,\theta+\underline{h}) \in \mathcal{F} \text{ for some } k\right\},$$

where $\underline{h} = (h,0,\ldots,0) \in E^s$, i.e., $\theta+\underline{h} = (\theta_1+h,\theta_2,\ldots,\theta_s)$. We write $\gamma(\theta)$ for that function of θ for which $k(\theta)f^p(x,\theta) = f(x,\gamma(\theta))$ and assume that $\gamma(\theta_1,\ldots,\theta_s) = (\theta_1,\theta_2',\ldots,\theta_s')$ for all $\theta \in \Theta$. Finally, μ_1 and μ_2 are any probability measures on H such that $E_1 = \int_H h\,d\mu_1(h) < \infty$ and $E_2 = \int_H h\,d\mu_2(h) < \infty$.

The bounds discussed previously included those given by Chapman and Robbins [4], Fraser and Guttman [7], and Kiefer [9]. The Chapman-Robbins bound is

$$(2.6)\qquad V(t) \geqq \left\{ \inf_{h \in H} \frac{1}{h^2} \left[\int_{-\infty}^{\infty} \cdots \int_{-\infty}^{\infty} \prod_{i=1}^{n} \frac{f^2(x_i, \theta + \underline{h})}{f(x_i, \theta)} \prod_{i=1}^{n} dx_i - 1 \right] \right\}^{-1}.$$

The bound derived by Fraser and Guttman is

$$(2.7)\qquad V(t) \geqq \left\{ \inf_{\substack{c_1, \ldots, c_r \\ h \in H_r^*}} \frac{1}{h^2} \left(\int \cdots \int \frac{\left\{ \sum_{j=1}^{r} c_j \left[\prod_{i=1}^{n} f(x_i, \theta + j\underline{h}) - \prod_{i=1}^{n} f(x_i, \theta + (j-1)\underline{h}) \right] \right\}^2}{\prod_{i=1}^{n} f(x_i, \theta)} \prod_{i=1}^{n} dx_i \right) \right\}^{-1},$$

where $c_1, \ldots, c_r$ are non-negative and sum to unity, and $H_r^* = \{h \mid jh \in H$ for $j = 1, \ldots, r\}$. Kiefer gives the result

$$(2.8)\qquad V(t) \geqq \sup_{\mu_1, \mu_2} \left\{ \frac{(E_1 h - E_2 h)^2}{\int_{-\infty}^{\infty} \cdots \int_{-\infty}^{\infty} \frac{\left\{ \int_H \prod f(x_i, \theta + \underline{h})\, d[\mu_1(h) - \mu_2(h)] \right\}^2}{\prod f(x_i, \theta)} \prod dx_i} \right\},$$

where the supremum is taken over all measures μ_1, μ_2 for which the integrals are defined.

A discussion in which these and the ensuing bounds are compared and applied to several distributions is given in reference [2]. For the Pearson Type III distribution the Chapman-Robbins and Fraser-Guttman bounds yield trivial results for $\alpha \leqq 1/2$ and, except for a limiting form of the Fraser-Guttman bound when $\alpha = 1$, are less than the optimal bound for $1/2 < \alpha \leqq 2$. The Keifer bound, although proved by Barankin [1] to be optimal under certain conditions, is essentially an existence theorem in the sense that it does not provide an applicable analytical technique for construction of a bound.

Two additional bounds were developed in reference [2] in an attempt to obtain applicable non-trivial bounds for the entire range of α in the

Type III distribution. These are

$$(2.9)\qquad V(t) \geq \sup_{(h,p)\in H\cdot P} \left\{ \frac{h^2/k^{2n}(\theta)}{\int\cdots\int \frac{[\Pi f^p(x_i,\theta+\underline{h}) - \Pi f^p(x_i,\theta)]^2}{\Pi f(x_i,\theta)} \Pi dx_i} \right\},$$

and

$$(2.10)\qquad V(t) \geq \left\{ \inf_{\substack{c_1,\ldots c_r \\ h,p\in H_r^*\cdot P}} \left[\frac{k^{2n}(\theta)}{h^2} \int\cdots\int \frac{\sum_{j=1}^{r} c_j[\Pi f^p(x_i,\theta+j\underline{h}) - \Pi f^p(x_i,\theta+(j-1)\underline{h})]}{\Pi f(x_i,\theta)} \Pi dx_i \right] \right\}^{-1},$$

where

$$(2.11)\qquad H_r^*\circ P = \{(h,p) \mid kf^p(x,\theta+j\underline{h}) \in \mathfrak{F} \text{ for some } h \text{ and all } j = 0,\ldots,r\}.$$

The latter two inequalities do yield non-trivial inequalities for all α. In practice, however, considerable analytical and numerical difficulties are encountered. The details of the application of inequality (2.9) only were given previously. Application of inequality (2.10) will be the subject of Section 2.3 below.

Note that for the Pearson Type III distribution $H = \{h \mid 0<h<\infty\}$, $P = \{p \mid 1/2<p<q(\alpha)\}$, where

$$(2.12)\qquad q(\alpha) = \frac{1}{2(1-\alpha)} \qquad 0 < \alpha < 1$$
$$= \infty \qquad \alpha \geq 1,$$

$H\cdot P$ is the Cartesian product of H and P, and

$$(2.13)\qquad k(\theta) = \frac{p^{p\alpha-p+1}\Gamma^p(\alpha)}{\beta^{1-p}\Gamma(p\alpha-p+1)}.$$

2.2 Numerical Methods for Investigation of the Variance Bound

It has been shown that application of inequality (2.9) to the Type III distribution yields the inequality

$$(2.14)\quad V(t) \geq \sup_{\substack{h\in H\\ p\in P}} \left[\frac{h^2(2p-1)^{n(2p\alpha-2p-\alpha+2)} \cdot 2n(p\alpha-p+1)}{\Gamma^n(\alpha)\, p^{2n(p\alpha-p+1)}} \left\{ e^{nh/\beta} g^n \left(\frac{(2p-1)}{\beta} h; 2p, \alpha-1 \right) \right.\right.$$

$$\left.\left. -2e^{(1-p)nh/\beta} g^n \left(\frac{(2p-1)}{\beta} h; \frac{p}{1-p}, (1-p)(\alpha-1) \right) + \Gamma^n(2p\alpha-2p-\alpha+2) \right\}^{-1} \right]$$

where

$$(2.15)\qquad g(b;a,c) = \int_0^\infty y^{ac}(y+b)^{-c}\, e^{-y}\, dy.$$

Because the above bound is analytically quite intractable, a numerical investigation was initiated. This investigation involves numerical integration of the function g and utilizes a modification of a method known as the "Single" procedure for the steepest-ascent method described by Brooks [3] in searching for the supremum on the right-hand side of inequality (2.14). Some preliminary results were given in reference [2].

An early version of the computer program to calculate the lower bound of inequality (2.14) was described in detail in [2]. In Section B3 of Appendix B of that report, certain modifications to the program were proposed with a view to providing greater efficiency of table generation, and to dealing with certain convergence problems that had been troublesome. Several of these modifications have been implemented. In addition, subsequent difficulties encountered in the investigation have necessitated further changes and improvements. The following additional features have been introduced into the program described in [2]:

<u>Storage of tables of auxiliary functions, g(b,a,c)</u>. The most time-consuming feature of the program is the numerical integration required to evaluate the function g(b;a,c) given in equation (2.15). It is therefore desirable to store values of this function as they are generated, and to use table look-up and interpolation as much as possible in subsequent calculations.

The previous version of the program was modified so that the tabulated values are stored efficiently. The tabulated values corresponding to different values of the parameter α are maintained in separate card decks. Thus, on any particular run, only those decks for the α-values used in this run need be read in. This permits all calculations to be carried out in core. At the same time, the search procedure was improved.

This feature increases the efficiency in two ways. Firstly the same grid of tabulated points can be used for all values of sample size n, for the same value of the distribution parameter α. Considerable overlap occurs in the maximum seeking paths. Secondly, if sufficient convergence has not been obtained by a specified number of steps of the procedure prior to cut-off in a given run, the search can be continued from this point at the next run, without the need for recomputing values of the g-function. Furthermore, if numerical procedures are ever applied to the Fraser-Guttman-type bounds (to be discussed in the next section), the tables already generated for the present procedure will cover a substantial fraction of the numerical integration required.

The table-interpolation device was found to be of greatest use in the region $p < 1$. In the region $p \geq 1$, exact calculations were needed immediately. This is due to the fact that some of the quantities become critical in this area, and the interpolation, with interval 0.01 for both p and h, is of little help in the search procedure and can, in fact, lead away from the value sought.

In cases where the interpolation method was used, at least one iteration was performed using the exact method to conclude the search procedure. This does not help appreciably in determining the (p,n) values,

but does provide an exact value of the variance bound at a point very close to the true maximum.

It should be noted that the exact method is very much more time-consuming than the table-interpolation method (by a factor of 10 or greater).

Reduction of step-size. The original program involved a maximum-seeking method for the (p,h)-combination at which the maximum value of the bound occurs. A 2x2 design is used at an arbitrary starting point, and the gradient of the surface is estimated. A step of predetermined length is made in this direction, and the step is repeated as long as improvement in the bound occurs. When no improvement occurs, a new 2x2 design is used. The question of when the step size should be reduced was treated as follows: If the gradient previously used was less than a predetermined constant, 0.1 say, the new step size is set at 0.6 of the old. If not, then we continue with the old step size.

This procedure has been improved in two ways; first, the new gradient is used to determine whether to reduce step size, and the predetermined constant is now an input variable and hence can be made dependent on the sample size n. It has been conjectured [2] that for larger values of n, the value of the bound can be expected to be of the order $n^{-2/\alpha}$. It therefore seemed reasonable that the value of the gradient at which we start to reduce step-size be made proportional to this.

The second improvement involving a reduction in step size concerns the possibility of the sequence of steps crossing itself or going round in a circle. This was observed to happen in early runs. It is reasonable, under these circumstances, to suppose that we are near the

maximum, and that step size should be reduced, regardless of the current value of the gradient. To implement this, we examine the six previous trial points at every stage. If our current position is within the current step size of any of these, we reduce step size by the factor 0.6.

Boundary constraints. The h parameter must not be permitted to become negative, since the result of inequality (2.14) is then no longer valid. If the next step of the search procedure would make h negative, we refrain from taking this step, and instead perform the 2x2 design segment of the procedure, centered on our current position, after reducing our basic interval by the factor 0.6. Furthermore, if at any time the 2x2 design overlaps the h-axis, we reduce the interval similarly, and repeat the operation. A similar procedure is followed when the p parameter nears its boundaries, namely $p > 0.5$, and $p < [2(1-\alpha)]^{-1}$ in the event that $\alpha < 1$.

One further case in which interval size is reduced should be noted. This occurs when the values of the bound calculated at the corners of the 2x2 design all fall below the value at the center. This means that a maximum (or at least a local maximum) occurs within the design square, so we reduce interval size and repeat the procedure.

The case of $p = 1$. The numerical method used to obtain the bound is also applicable, of course, when p is set equal to 1 in the event that $\alpha > 1/2$, i.e., when the Chapman-Robbins bound is applicable. The resulting bound, in general, will not be optimal, but it is interesting to see what effect this modification has.

Since p is fixed, we can no longer perform interpolation in the (p,h) plane. It would be possible to perform interpolation in one dimension, namely, along the h-axis, but it was decided that, in view of the limited amount of computation proposed for this special case, it would not be

worth the trouble of writing special routines for this purpose. Thus the function $g(b;a,c)$ was calculated directly in each step. The search procedure was carried out using the routine "LARMAX" (Linear Maximization). We start with a suitable value of h, and a suitable step-size, Δh, say. The variance bound is calculated for three values of the h-variable, viz., $h - \Delta h$, h, and $h + \Delta h$, and for two intermediate values, $h - (1/2)\Delta h$ and $h + (1/2)\Delta h$. This pattern of five points is preserved throughout the search procedure. The range is then extended in either direction, and/or the step-size is reduced, in such a way that the maximum is determined to any required degree of accuracy. This will lead to the maximum value of the bound, assuming that it is unique.

Overflow precautions. In computing the expression on the right-hand side of the inequality (2.14), care must be taken that none of the quantities exceed the floating-point capability of the computer (approximately 10^{38}). The following feature provides for this. The critical quantities are $\Gamma^{2n}(p\alpha-p+1)$ in the numerator, and $\Gamma^{n}(\alpha)$, and the linear combination of g^{n} of two arguments and $\Gamma^{n}(2p\alpha-2p-\alpha+2)$, in the denominator. These five quantities are calculated by successive multiplications, 2n or n times, as appropriate.

When any of these three factors (or in the case of the linear combination, any of its three components) exceeds 10^{15} during the multiplication loop, the factor is multiplied by 0.1 a sufficient number of times to bring it below 10^{15}. By keeping track of the number of times this is done, we can re-insert the factor into the final result, or, if this would exceed capacity, print the factor separately.

The final form of the computer program used in the numerical investigation of the bound of inequality (2.9) is given in the Appendix. Included

in the Appendix are a brief discussion, including a flow-chart and sample input sheet, and a complete listing of the FORTRAN statements of the program. The program, in its present form, has enabled us to investigate quite efficiently the lower bound of inequality (2.14) for several values of n and several values of α. The next section is concerned with the results of this investigation.

We note that some possible improvements for general search techniques in two (or more) dimensions are suggested by experience in this problem. To our knowledge, these have not been considered in the literature. In particular, the paper by S. Brooks [3], on which this technique was based, does not consider them.

The difficulty arises in the arbitrary choice of the initial step-size, or in its arbitrary reduction by a factor of 0.6 when a search path reaches a "dead end" (i.e., no improvement over the previous maximum). It will be recalled that this reduction is effected only if the current gradient of the path is less than an assigned constant. However, it can happen that a point quite close to the maximum is reached, and the next step takes us away from this maximum. To avoid this, it is suggested that we examine the function values v_1, v_2, v_3, v_4 for the sample points of the experimental design, and compare them with the value v_c already attained.

If all values v_i, $i = 1$ to 4, are less than v_o, then obviously we must have a local maximum in the vicinity of the point with value v_o. There is no point in taking a step based on this configuration, since we

should then get further away from the maximum. The design should thus be reduced in size until at least one point has value v exceeding v_o. Alternatively, the design could be compressed until all four points exceed a fixed fraction (e.g. 0.9) of the value v_o. The former procedure was found to be effective in this study.

2.3 Numerical Results

A number of runs were made for sample sizes 1, 11, 21, 31, 41, 51, 71, 91 and 131 and for α = .25, .5, .51, .60, .75, 1.00, 1.25, 1.5, 2.0, 3.0, and 5.0. As indicated above, the calculations proceed as follows. For each Alpha-value, a library deck is read in. This provides a tabulation of values of two functions, g_1 and g_2, having p, h as arguments, for values of p, h in the range p = 0.0(0.01) 1.50, h = 0.00(0.01)... without limit. The calculations for various sample sizes are then made, using tabulated function-values where available, and when appropriate, and computing and storing them when they are not. When all calculations for this value of α are complete, the tables are sorted internally, and a new library deck is punched out on line.

Substantial library decks have been accumulated for most of the parameter values; in fact, these tabulations cover most of the grid points that would be needed for any sample size calculation in the range 1 to 100, for the parameter values listed. An indication of the saving in computer time was provided by comparing runs using substantially complete library decks with those where no prior values were known. A rough estimate is that run time is cut to one fifth or one tenth by the library deck feature.

All of the results to date are summarized in Table 2.1. The table includes the maximizing points nh and p, n^2 times the maximum and, for $\alpha \geq 2$, $n^{2/\alpha}$ times the maximum. For completeness the table also gives

TABLE 2.1

SUMMARY OF VARIANCE BOUND NUMERICAL RESULTS

α	n	nh	p	n^2Var	$n^{2/\alpha}$Var
.25	1	0.8006	0.540	0.0757	.0757
	11	0.2756	0.624	0.7573 (-7)*	.1345
	21	0.1036	0.636	0.3414 (-11)	.0027 (-1)
	51	0.0264	0.656	0.4217 (-22)	.7420 (-12)
	91	0.0036	0.660	0.2452 (-30)	.1392 (-18)
.5	1	0.8230	0.592	0.2960	0.2960
	11	0.5090	0.764	0.3430 (-2)	0.4150
	21	0.1395	0.886	0.2011 (-3)	0.0887
	31	0.1000	0.970	0.1568 (-5)	0.1507 (-2)
	41	0.0101	0.999	0.4039 (-5)	0.6790 (-2)
	91	0.00015	0.999	0.9489 (-9)	0.7858 (-5)
.51	1	0.8280	0.589	0.2798	0.2798
	11	0.5119	0.775	0.4312 (-2)	0.4312
	91	0.00051	0.999	0.1360 (-7)	0.7906 (-4)
.60	1	0.8434	0.605	0.3670	0.3670
	11	0.6504	0.824	0.0220	0.5381
	91	0.0749	0.9988	0.3356 (-3)	0.1376
.75	1	0.8475	0.6325	0.5221	0.5221
	11	1.0956	0.8842	0.1257	0.6222
	21	0.8481	0.9423	0.0802	0.6112
	31	0.7093	0.9426	0.0631	0.6235
	41	0.7786	0.9849	0.0525	0.6246
	51	0.2297	0.9959	0.0486	0.6658
	91	0.5550	0.99898	0.0322	0.6520
	131	0.4430	0.99900	0.0286	0.7379
1.00	1	1.1101	0.6761	0.8120	0.8120
	2	1.3468	0.8076	0.7161	0.7161
	4	1.4745	0.8993	0.6780	0.6780
	6	1.5158	0.9324	0.6670	0.6670
	11	1.5521	0.9630	0.6578	0.6578
	16	1.5653	0.9746	0.6545	0.6545
	21	1.5722	0.9806	0.6528	0.6528
	26	1.5763	0.9843	0.6518	0.6518
	31	1.5792	0.9869	0.6511	0.6511
	36	1.5812	0.9887	0.6506	0.6506
	41	1.5827	0.9901	0.6502	0.6502
	46	1.5839	0.9912	0.6500	0.6500
	51	1.5849	0.9920	0.6497	0.6497
	56	1.5857	0.9927	0.6495	0.6495
	61	1.5863	0.9933	0.6494	0.6494
	∞	1.5936	1.0000	0.6476	0.6476

* (-x) indicates that tabulated value is to be multiplied by 10^{-x}.

TABLE 2.1 (Continued)

α	n	nh	p	n^2 Var	$n^{2/\alpha}$ Var
1.25	1	1.2396	0.7103	1.0981	1.098
	11	1.9500	1.0000	1.7246	0.662
	21	2.1370	1.0075	2.1034	0.622
	31	2.2417	1.0081	2.3963	0.607
	41	2.2726	1.0006	2.7089	0.613
	51	2.3000	1.0000	2.978	0.618
	71	2.5606	1.0012	3.3058	0.601
	91	2.6000	1.0000	3.6463	0.600
1.50	1	1.3477	0.7409	1.3784	1.378
	11	2.1931	1.0158	3.1642	0.640
	21	2.4735	1.0189	4.3750	0.575
	31	2.6792	1.0170	5.3629	0.544
	41	2.8511	1.0198	6.2372	0.525
	51	2.9558	1.0144	7.0321	0.511
	71	3.1779	1.0117	8.4537	0.492
2.00	1	1.7470	0.7969	1.8821	1.8821
	11	2.4240	1.0279	6.8506	0.629
	31	3.0291	1.0229	14.2368	0.448
	51	3.4251	1.0186	20.644	0.410
	91	4.1235	1.0061	32.158	0.353
3.00	1	2.3361	0.8538	2.7622	2.7622**
	11	2.4934	1.0391	15.8955	1.445
	21	2.9280	1.0247	27.5487	1.310
	31	3.2298	1.0104	38.6824	1.248
	41	3.4855	1.0010	49.3972	1.205
	51	3.5928	1.0012	60.2271	1.181
5.00	1	2.9591	0.9139	4.45	4.45
	11	2.419	1.022	36.42	3.31
	21	2.611	1.018	66.79	3.18

** n Var from this point on.

values for $\alpha = 1$ obtained in a previous study [2]. Although a few entries of the table may not be completely accurate, some general patterns are apparent. The results are of considerable interest, although not all are as had been expected.

For $1 \leqq \alpha \leqq 2$, the bound times $n^{2/\alpha}$ appears to be approaching a constant as n increases. For $\alpha < 1$, however, no such general conclusion is apparent. It is quite evident that the bound is of smaller order than $n^{-2/\alpha}$ for the cases run with $\alpha \leqq .6$. For $\alpha = .75$, however, the curve again appears to be approaching an asymptote. These results are shown graphically in Figure 2.1, where $n^{2/\alpha}$ times the bound is plotted for $\alpha \leqq 2$ and n times the bound for $\alpha \geqq 2$. Their apparent regularity is an interesting feature of this pattern of curves.

Note that our investigation has included some values of α corresponding to the regular case. For Alpha greater than 2, we know that the Cramer-Rao bound exists and that the variance of the maximum likelihood estimator asymptotically achieves this bound. Thus the value of p for which the maximum is attained in the above should tend to 1 as the sample size increases.

This appears to be happening for $\alpha = 3.0$ and 5.0. For finite samples, however, the Cramér-Rao bound is not attained; this is because the criterion

$$\frac{\partial \log L}{\partial a} = A(a)\,\{t-a\}, \tag{2.16}$$

where a is the location parameter and A(a) is any function of a alone, is not satisfied for the Pearson type III distribution. (See Kendall and Stuart [8, Section 17.17].) Hence we might expect to do better than the Cramér-Rao bound for finite samples; the values given in Table 2.1 do,

Figure 2.1. Variance Bound Times $n^{2/\alpha}$ for $\alpha \leq 2$, Times n for $\alpha \geq 2$.

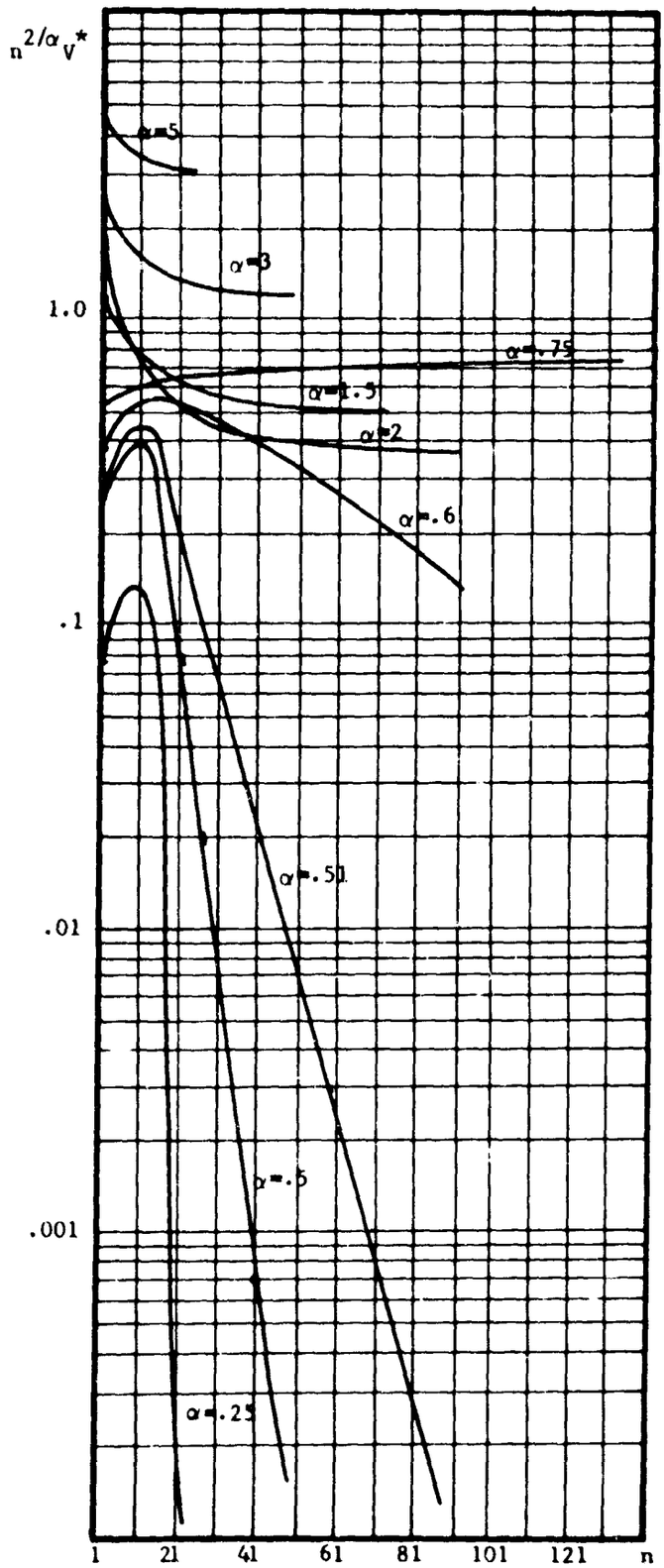

in fact, yield such bounds. This follows since (in the regular case) the Cramér-Rao bound is simply $(\alpha-2)/n$ (recall that we have taken $\beta = 1$). For $\alpha = 3$ and 5, respectively, the bound times n becomes simply 1 and 3. The tabulated values exceed these in both cases.

It would also be interesting to see whether these improved bounds come close to the actual variance for maximum-likelihood estimators in the regular case. This would establish the efficiency of these estimators for finite sample sizes.

Some runs have also been made for $\alpha = 1.5$ with p set equal to 1. This provides a comparison with the Chapman-Robbins bound. The results of this study are given in Table 2.2. It is interesting that there is apparently little improvement in the bound by the introduction of the variable p and that furthermore as $n \longrightarrow \infty$ the two bounds appear to be identical. (Recall that this result had been proven only for $\alpha = 1$.)

TABLE 2.2

COMPARISON OF MAXIMUM VARIANCE BOUNDS ATTAINED WITH p SET EQUAL TO 1, AND WITH p UNRESTRICTED

$\alpha = 1.5$

	p Unrestricted			p = 1	
n	nh	p	$n^{2/\alpha}$ Var	nh	$n^{2/\alpha}$ Var
1	1.35	0.741	1.3784	-	-
11	2.19	1.015	.6397	2.1596	.6386
21	2.47	1.019	.5743	2.4244	.5719
31	2.68	1.107	.5439	2.6195	.5404
41	2.85	1.020	.5245	2.7556	.5210
51	2.96	1.014	.5113	-	-
71	3.178	1.012	.4930	-	-

In Figures 2.2 and 2.3 the values of p and h at which the maximum is attained are shown for the non-regular and regular cases, respectively. The solid lines correspond to $\alpha = 0.25$, 0.5, 0.6, 0.75, 1.00, 1.25, and 2.0, in Figure 2.2 and to $\alpha = 3.0$ and 5.0 in Figure 2.3. The dashed lines correspond to n = 1, 11, 21, 31, 41 and 51. (To preserve clarity, the lines for sample sizes 71, 91 and 131 have not been drawn). The scale used in Figures 2.2 and 2.3 is a logarithmic one on which 1.03 corresponds to unity on the log scale and each decrement of 0.01, reading from right to left corresponds to equal increment on the log scale. This transformation provided greater clarity in the region where $p > 1$.

Not all the points plotted correspond to cases in which the maximum variance bound has been very accurately obtained (say to within .000001). Most of them, however, are quite accurate. In a few cases, in which it is clear that we are nowhere near the true global maximum, the point has been omitted. For example, this is the case with $\alpha = 1.25$ and n = 41 and 51.

The curves for $\alpha = .25$ and .5 are restricted to the regions $p \leq 2/3$ and $p \leq 1$, respectively, according to the theory. In fact, it is seen that as the sample size tends to infinity, the (p,nh) point tends to (.666...,0) and (1.0,0) respectively. In the region $.5 \leq \alpha \leq 1.0$, it is conjectured that the limit points occur on the axis p = 1, the curves for $\alpha = 0.5$, 0.6 and 0.75 suggesting this. It is known that the curve for $\alpha = 1$ tends to (1,1.5936), again a point on the p = 1 axis, with increasing n [2, Section 3.1.1].

For $1 \leq \alpha \leq 2$, the curves extend further into the $p > 1$ region, attain a stationary point for p, and then tend asymptotically to the p = 1 axis. For $\alpha > 2$, the curves initially have a negative gradient, and then

Figure 2.2

Maximizing Values, (p,nh), for Variance Bounds in the Non-Regular Case.

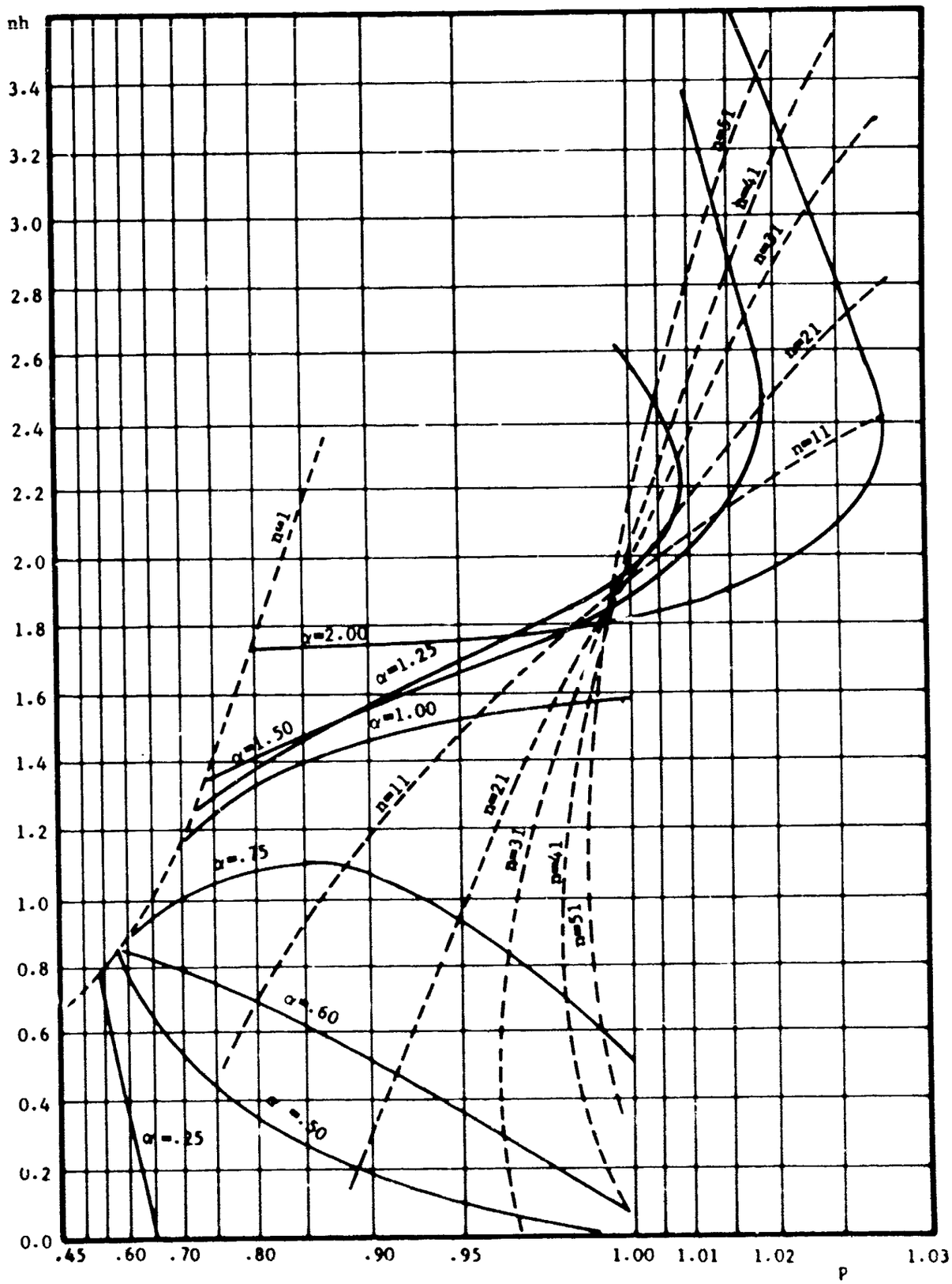

Figure 2.3.

Maximizing Values, (p,nh), for Variance Bounds in the Regular Case.

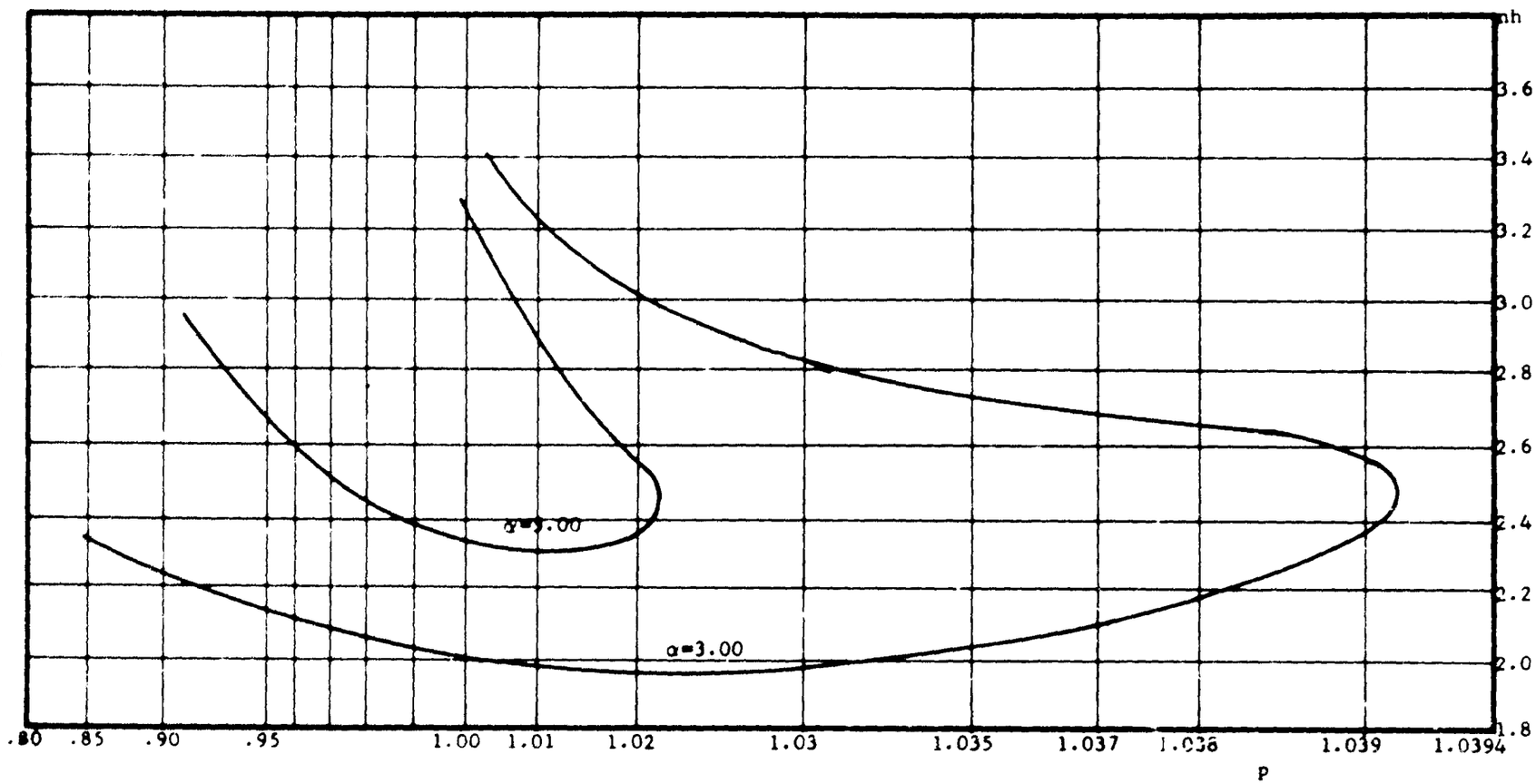

behave as in the case $1 \leq \alpha \leq 2$. However, this family of curves does not conform to that for $\alpha \leq 2$. There is thus an apparent discontinuity at $\alpha = 2$.

The dashed curves for constant sample size n are quite consistent for α values less than or equal to 2. For $\alpha > 2$, the points for $n = 1$ fit in well. The points for sample sizes 11, 21,..., however, do not conform to the main family.

Some additional numerical work along the above lines may be considered. In any such additional runs, the curves of Figure 2.2 can be used to provide quite accurate initial values of p and nh.

2.4 Generalization of the Bound

Application of the bound of inequality (2.10) to the Type III distribution is analytically quite straightforward, although some additional numerical difficulties can be anticipated. We consider only the case $r = 2$.

It is known that the bound of order 2 will be an improvement over that of order 1, i.e., over the bound discussed in the previous section. We shall see that, in addition, most terms of the second order bound can also be expressed in terms of the integrals g given in equation (2.15). Thus the bound can conceivably be investigated numerically with relatively considerably less programming effort than was required in the original such investigation. Whether or not a further investigation of this type would be worthwhile has not yet been determined. This could be an interesting area for further research. Should a numerical study of the case $r = 2$ be conducted and found to yield results suggesting a considerable improvement in the bound, values of r in excess of 2 would also be considered.

We proceed with the construction of the bound for the case $r = 2$. The second order bound of the type given in inequality (2.10) is

$$(2.17)\quad V(t) \le \sup_{c_1,c_2,h,p} \frac{h^2/k^{2n}}{\int\cdots\int \frac{[-c_1 f^p(x,a)+(c_1-c_2)f^p(x,a+h)+c_2 f^p(x,a+2h)]^2}{f(x,a)}\Pi dx_i},$$

where f is the joint density of $X_1,\ldots,X_n$, each following a Type III distribution, k is given in equation (2.13), and $x = (x_1,\ldots,x_n)$.

To maximize with respect to the c_j's, we use the fact that $c_2=1-c_1$ and differentiate with respect to c_1. Write

$$(2.18)\qquad f_v^u = [f(x,a+v)]^u.$$

The maximizing value of c_1 is determined from the equation

$$(2.19)\qquad 0 = \frac{\partial}{\partial c_1}\int\cdots\int[-c_1 f_0^p + (2c_1-1)f_h^p + (1-c_1)f_{2h}^p]^2 f_0^{-1}\Pi dx_i$$

$$= \int\cdots\int 2[-c_1 f_0^p + (2c_1-1)f_h^p + (1-c_1)f_{2h}^p](-f_0^p+2f_h^p-f_{2h}^p)\Pi dx_i.$$

We find

$$(2.20)\qquad c_1 = \frac{\int\cdots\int(f_{2h}^p-f_h^p)(f_0^p-2f_h^p+f_{2h}^p)f_0^{-1}\Pi dx_i}{\int\cdots\int (f_0^p-2f_h^p+f_{2h}^p)^2 f_0^{-1}\Pi dx_i}.$$

The integral in the denominator of the bound (2.17) therefore becomes

$$(2.21)\quad \int\cdots\int[c_1^2 f_0^{2p}+2c_1(1-2c_1)f_0^p f_h^p-2c_1(1-c_1)f_0^p f_{2h}^p+(1-2c_1)^2 f_h^{2p}$$

$$-2(1-2c_1)(1-c_1)f_h^p f_{2h}^p+(1-c_1)^2 f_{2h}^{2p}]f_0^{-1}\Pi dx_i$$

$$= c_1^2\int\cdots\int(f_0^{2p}-4f_0^p f_h^p+2f_0^p f_{2h}^p+4f_h^{2p}-4f_h^p f_{2h}^p+f_{2h}^{2p})f_0^{-1}\Pi dx_i$$

$$+ 2c_1\int\cdots\int(f_0^p f_h^p - f_0^p f_{2h}^p - 2f_h^{2p} + 3f_h^p f_{2h}^p - f_{2h}^{2p})f_0^{-1}\Pi dx_i$$

$$+ \int\cdots\int(f_h^{2p} - 2f_h^p f_{2h}^p + f_{2h}^{2p})f_0^{-1}\Pi dx_i$$

$$= \int\cdots\int(f_h^p - f_{2h}^p)^2 f_0^{-1}\Pi dx_i - \frac{\left\{\int\cdots\int(f_{2h}^p - f_h^p)(f_0^p - 2f_h^p + f_{2h}^p)f_0^{-1}\Pi dx_i\right\}^2}{\int\cdots\int(f_0^p - 2f_h^p + f_{2h}^p)^2 f_0^{-1}\Pi dx_i}$$

(In all of the above, h is positive and the limits of integration are $a < x_i < \infty$ for $i = 1,\ldots,n$.)

Equation (2.21) involves six basic integrals, including all second degree combinations of the form $f_v^p f_{v'}^p$, where $v,v' = 0,h,2h$. Except for constants, these are

$$(2.22)\qquad \int_a^\infty\cdots\int_a^\infty \Pi(x_i-a)^{(2p-1)(\alpha-1)}\exp\{-\Sigma(2p-1)(x_i-a)/\beta\}\,\Pi dx_i = \rho^n\Gamma^n(2p\alpha-2p-\alpha+2),$$

$$(2.23)\qquad \int_{a+h}^\infty\cdots\int_{a+h}^\infty \frac{\Pi(x_i-a-h)^{2p(\alpha-1)}\exp\{-2p\Sigma(x_i-a-h)/\beta\}}{\Pi(x_i-a)^{\alpha-1}\exp\{-\Sigma(x_i-a)/\beta\}}\,\Pi dx_i$$

$$= \rho^n e^{nh/\beta}\int_0^\infty\cdots\int_0^\infty y^{2p(\alpha-1)}\left(y + \frac{2p-1}{\beta}h\right)^{-(\alpha-1)} e^{-y}dy$$

$$= \rho^n e^{nh/\beta} g^n\Big(h(2p-1)/\beta, 2p, \alpha-1\Big),$$

$$(2.24)\qquad \int_{a+2h}^\infty\cdots\int_{a+2h}^\infty \frac{\Pi(x_i-a-2h)^{2p(\alpha-1)}\exp\{-2p\Sigma(x_i-a-2h)/\beta\}}{\Pi(x_i-a)^{\alpha-1}\exp\{-\Sigma(x_i-a)/\beta\}}\,\Pi dx_i$$

$$= \rho^n e^{2nh/\beta} g^n\Big(2h(2p-1)/\beta, 2p, \alpha-1\Big),$$

$$(2.25)\qquad \int_{a+h}^\infty\cdots\int_{a+h}^\infty \frac{\Pi[(x_i-a)(x_i-a-h)]^{p(\alpha-1)}\exp\{-\frac{p}{\beta}\Sigma(2x_i-2a-h)\}}{\Pi(x_i-a)^{\alpha-1}\exp\{-\Sigma(x_i-a)/\beta\}}\,\Pi dx_i$$

$$= \int_0^\infty \cdots \int_0^\infty \Pi[(x_i+h)^{p-1} x_i^p]^{\alpha-1} \exp\{-\frac{1}{\beta}\Sigma[(p-1)(x_i+h)+px_i]\} \Pi dx_i$$

$$= \rho^n e^{(1-p)nh/\beta} g^n\left(\frac{2p-1}{\beta} h, \frac{p}{1-p}, (1-p)(\alpha-1)\right),$$

$$(2.26) \quad \int_{a+2h}^\infty \cdots \int_{a+2h}^\infty \frac{\Pi[(x_i-a-2h)(x_i-a)]^{p(\alpha-1)} \exp\{-\frac{2p}{\beta}\Sigma(x_i-a-h)\}}{\Pi(x_i-a)^{\alpha-1} \exp\{-\Sigma(x_i-a)/\beta\}} \Pi dx_i$$

$$= \rho^n e^{2(1-p)nh/\beta} g^n\left(\frac{2(2p-1)h}{\beta}, \frac{p}{1-p}, (1-p)(\alpha-1)\right)$$

and

$$(2.27) \quad \int_{a+2h}^\infty \cdots \int_{a+2h}^\infty \frac{\Pi[(x_i-a-h)(x_i-a-2h)]^{p(\alpha-1)} \exp\{-\frac{p}{\beta}\Sigma(2x_i-2a-3h)\}}{\Pi(x_i-a)^{\alpha-1} \exp\{-\Sigma(x_i-a)/\beta\}} \Pi dx_i$$

$$= \rho^n e^{(2-p)nh/\beta} \int_0^\infty \cdots \int_0^\infty \Pi\left[x_i^p\left(x_i+\frac{2p-1}{\beta}h\right)^p\left(x_i+2\frac{2p-1}{\beta}h\right)^{-1}\right]^{\alpha-1} e^{-\Sigma x_i} \Pi dx_i$$

$$= \rho^n e^{(2-p)nh/\beta} g_1^n\left(2h\frac{2p-1}{\beta}, p, \alpha-1, \frac{2p-1}{\beta}h\right),$$

say, where

$$(2.28) \qquad \rho = \left(\frac{\beta}{2p-1}\right)^{2p\alpha-2p-\alpha+2}.$$

Note that the last integral is defined in terms of a new special function, namely,

$$(2.29) \quad g_1(b,a,c,d) = \int_0^\infty [y(y+d)]^{ac}(y+b)^{-c}e^{-y}dy.$$

All other integrals involve only the function g. For increasing r, similar additional special functions are introduced. The exact form of these has not been investigated.

3. APPROXIMATIONS TO THE PITMAN ESTIMATOR FOR THE TYPE III DISTRIBUTION

Previous results had led to the conjecture that the minimum observation, Y_1, is an efficient estimator of a, or, at least, is "nearly efficient" in the sense that the order of magnitude in n of its asymptotic variance agrees with that of the optimal bound. As noted previously, he variance of Y_1 is of order $n^{-2/\alpha}$. The numerical results given in the previous chapter suggest that the bound investigated is $\mathcal{O}(n^{-2/\alpha})$ only for $1 \leqq \alpha \leqq 2$. The unresolved question with regard to the remainder of the range of α is whether the lack of agreement in order of magnitude is due to inefficiency of the estimator or sub-optimality of the bound. (A third possibility, of course, is that the numerical results are anomalous. This could result, for example, because of convergence to a local maximum which is orders of magnitude smaller than the global maximum. There is, however, no evidence to support such a conclusion.) Assuming that the numerical results are correct, one suspects, since the bound ultimately decreases very rapidly with increasing n for $\alpha < 1$, that the difficulty is inherent in the bound, but the question remains open. In any case, the knowledge that Y_1 is not even sufficient other than for $\alpha = 1$, along with the possibility that it is inefficient even with respect to order of magnitude in n, provides motivation for an investigation of alternative estimators. Alternatives of the type suggested by the work of Pitman [11] are the subject of this chapter.

3.1 Pitman's Estimation Technique

The estimator introduced by E. J. G. Pitman [11] is "optimal"

according to several criteria of optimality and under quite general conditions. Pitman proved that it is unbiased, minimum variance among all invariant estimators and it has been shown by Stein [12] to be admissible under mean-square-error loss. This estimator is therefore "best" under almost any reasonable definition of the term.

The basic Pitman method, in general, is as follows. Let $X_1, \cdots, X_n$ be independent and identically distributed random variables with distribution function of the form $F(x-\theta)$ admitting of a density $F'(x) = f(x)$. Suppose $f(x) = 0$ for $x < \theta$. Let $Y_1 \leq Y_2 \leq \ldots \leq Y_n$ be the corresponding order statistics.

The Pitman estimator is

$$(3.1) \qquad \varphi(X_1, \ldots, X_n) = \frac{\int_{-\infty}^{\infty} \theta \prod_{i=1}^{n} f(X_i - \theta)\, d\theta}{\int_{-\infty}^{\infty} \prod_{i=1}^{n} f(X_i - \theta)\, d\theta} .$$

Note that, because of the assumption $X_i > \theta$, the limits on the integrals in equation (3.1) actually extend only to the minimum observation, Y_1. Furthermore, this expression can be written in terms of the Y_i as well, namely

$$(3.2) \qquad \varphi(Y_1, \ldots, Y_n) = \frac{\int_{-\infty}^{Y_1} \theta \prod_{i=1}^{n} f(Y_i - \theta)\, d\theta}{\int_{-\infty}^{Y_1} \prod_{i=1}^{n} f(Y_i - \theta)\, d\theta} .$$

Substitution of the Pearson Type III distribution into equation (3.1) or (3.2) yields integrals which cannot be expressed in closed form. An approximation to the estimator must therefore be constructed in order to pursue the analytical investigation in this case. The remainder of this chapter will be devoted to a series of approximations based upon an alternate representation of the Pitman estimator for densities bounded from below.

3.2 Approximations; Application to the Type III Distribution

An alternative representation of the Pitman estimator which immediately suggests a relatively simple approximation is obtained as follows. Let $\theta = Y_1 - \lambda$ and $Z_i = Y_i - Y_1$ for $i = 2,\ldots, n$. In terms of these variables, the estimator becomes

$$(3.3) \qquad \varphi_0(Y_1,Z_2,\ldots,Z_n) = \frac{\int_0^\infty (Y_1-\lambda)f(\lambda) \prod_{i=2}^n f(Z_i+\lambda)\, d\lambda}{\int_0^\infty f(\lambda) \prod_{i=2}^n f(Z_i+\lambda)\, d\lambda}$$

$$= Y_1 - \frac{\int_0^\infty \lambda f(\lambda) \prod_{i=2}^n f(Z_i+\lambda)\, d\lambda}{\int_0^\infty f(\lambda) \prod_{i=2}^n f(Z_i+\lambda)\, d\lambda}$$

$$= Y_1 - E\{Y_1|Z_2,\ldots,Z_n,\theta = 0\}.$$

Thus the estimator can be expressed as the difference between Y_1 and the regression of Y_1 on $Z_2,\ldots,Z_n$. The essence of the approximation to be developed below is to restrict consideration to a fixed number $m < n$ of the Z_i and to use, instead of the above, the estimator

$$(3.4) \qquad \hat{\theta} = Y_1 - \tilde{E}\{Y_1|Z_2,\ldots,Z_m\},$$

where $\tilde{E}\{Y_1|Z_2,\ldots,Z_m\}$ is the best <u>linear</u> regression of Y_1 on $Z_2,\ldots,Z_m$. We propose to investigate the asymptotic properties of estimators of this form for the parameter a in the Pearson Type III distribution.

Without loss of generality we may take

$$(3.5) \qquad f(x) = \frac{x^{\alpha-1}}{\Gamma(\alpha)} e^{-x} \qquad x \geq 0$$

$$= 0 \qquad x < 0.$$

The determination of $\tilde{E}$ requires a knowledge of the first two moments and the second order cross moments of $Y_1,\ldots,Y_m$. Since the exact forms of these are quite complex, we again seek approximations. Approximations to these moments for large n (and fixed m) are determined as follows. We may write

$$Y_i = F^{-1}(U_i), \tag{3.6}$$

where $U_1 \leq U_2 \leq \ldots \leq U_n$ are order statistics from a uniform distribution on (0,1). Since

$$F(x) = \frac{1}{\Gamma(\alpha)} \int_0^x t^{\alpha-1} e^{-t} dt, \tag{3.7}$$

we have, for x sufficiently small so that $e^{-x} \doteq 1$,

$$\begin{aligned} F^{-1}(u) &\doteq [\alpha\Gamma(\alpha)u]^{1/\alpha} \\ &= [u\Gamma(\alpha+1)]^{1/\alpha}. \end{aligned} \tag{3.8}$$

It is easily seen that the density, say h_i, of U_i is

$$\begin{aligned} h_i(u) &= i\binom{n}{i}u^{i-1}(1-u)^{n-i} \qquad 0 < u < 1 \\ &= 0 \qquad\qquad\qquad\qquad \text{otherwise.} \end{aligned} \tag{3.9}$$

It follows that

$$\begin{aligned} EY_i^{\,r} &\doteq E[U_i\Gamma(\alpha+1)]^{r/\alpha} \\ &= [\Gamma(\alpha+1)]^{r/\alpha} i\binom{n}{i}\int_0^1 u^{i-1+r/\alpha}(1-u)^{n-i}du \\ &= \frac{[\Gamma(\alpha+1)]^{r/\alpha}\Gamma(n+1)\,\Gamma(i+r/\alpha)\,\Gamma(n-i+1)}{\Gamma(i)\,\Gamma(n-i+1)\,\Gamma(n+1+r/\alpha)}. \end{aligned} \tag{3.10}$$

To facilitate the ensuing calculations, it is convenient to make one final approximation. Using Stirling's Formula, we have, for large n,

$$(3.11)\qquad \log\frac{\Gamma(n+c)}{\Gamma(n+b)} \doteq (n+b-1) - (n+c-1) + (n+c-1)\log(n+c-1)$$

$$- (n+b-1)\log(n+b-1) + (1/2)\log(n+c-1)$$

$$- (1/2)\log(n+b-1)$$

$$= b - c + (n-1)\log\left(\frac{n+c-1}{n+b-1}\right) + c\log(n+c-1)$$

$$- b\log(n+b-1) + (1/2)\log\left(\frac{n+c-1}{n+b-1}\right)$$

$$= b - c + (n-1/2)\log\left(1+\frac{c-b}{n+b-1}\right) + c\log(n+c-1)$$

$$- b\log(n+b-1)$$

$$\doteq b - c + (n-1/2)\frac{c-b}{n+b-1} + c\log(n+c-1) - b\log(n+b-1)$$

$$\doteq c\log(n+c-1) - b\log(n+b-1).$$

Thus

$$(3.12)\qquad \frac{\Gamma(n+c)}{\Gamma(n+b)} \doteq \frac{(n+c-1)^c}{(n+b-1)^b}.$$

Applying this to the right-hand side of equation (3.10), we obtain

$$(3.13)\qquad EY_i^{\,r} \doteq \frac{[\Gamma(\alpha+1)]^{r/\alpha}\,\Gamma(i+r/\alpha)}{\Gamma(i)}\,\frac{n}{(n+r/\alpha)^{1+r/\alpha}}$$

$$= \left(\frac{\Gamma(\alpha+1)}{n}\right)^{r/\alpha}\frac{\Gamma(i+r/\alpha)}{\Gamma(i)}.$$

Similarly, since, for $i < j$, U_i and U_j have joint density

$$(3.14)\qquad h_{ij}(u,v) = \frac{n!}{(i-1)!(j-i-1)!(n-j)!}\,u^{i-1}(v-u)^{j-i-1}(1-v)^{n-j},$$

we find that, for i,j small with respect to n,

$$(3.15)\qquad EY_iY_j \doteq \frac{n![\Gamma(\alpha+1)]^{2/\alpha}}{(i-1)!(j-i-1)!(n-j)!}\int_0^1\int_0^v u^{i-1+1/\alpha}\,v^{1/\alpha}(v-u)^{j-i-1}(1-v)^{n-j}\,du\,dv.$$

Making the substitution $u = tv$ in this expression, we obtain

$$(3.16)\quad EY_iY_j \doteq \frac{n![\Gamma(\alpha+1)]^{2/\alpha}}{(i-1)!(j-i-1)!(n-j)!}\int_0^1\int_0^1 v^{j-1+2/\alpha}(1-v)^{n-j}t^{i-1+1/\alpha}(1-t)^{j-i-1}dtdv$$

$$= \frac{n![\Gamma(\alpha+1)]^{2/\alpha}}{(i-1)!(j-i-1)!(n-j)!}\;\frac{\Gamma(j+2/\alpha)\,\Gamma(n-j+1)}{\Gamma(n+1+2/\alpha)}\;\frac{\Gamma(i+1/\alpha)\Gamma(j-i)}{\Gamma(j+1/\alpha)}$$

$$= \frac{[\Gamma(\alpha+1)]^{2/\alpha}}{\Gamma(i)}\;\frac{\Gamma(n+1)}{\Gamma(n+1+2/\alpha)}\;\frac{\Gamma(j+2/\alpha)\,\Gamma(i+1/\alpha)}{\Gamma(j+1/\alpha)}$$

$$\doteq \left(\frac{\Gamma(\alpha+1)}{n}\right)^{2/\alpha}\;\frac{\Gamma(i+1/\alpha)\,\Gamma(j+2/\alpha)}{\Gamma(i)\,\Gamma(j+1/\alpha)}\,.$$

It follows from equation (3.13) that

$$(3.17)\quad V(Y_i) \doteq \left(\frac{\Gamma(\alpha+1)}{n}\right)^{2/\alpha}\left[\frac{\Gamma(i+2/\alpha)}{\Gamma(i)} - \frac{\Gamma^2(i+1/\alpha)}{\Gamma^2(i)}\right],$$

and from equations (3.13) and (3.15) that, for $i < j$,

$$(3.18)\quad \mathrm{Cov}\,(Y_i,Y_j) \doteq \left(\frac{\Gamma(\alpha+1)}{n}\right)^{2/\alpha}\;\frac{\Gamma(i+1/\alpha)}{\Gamma(i)}\left[\frac{\Gamma(j+2/\alpha)}{\Gamma(j+1/\alpha)} - \frac{\Gamma(j+1/\alpha)}{\Gamma(j)}\right].$$

To determine the best linear regression of Y_1 on $Z_2,\ldots,Z_m$, we minimize the quantity $E\{Y_1-c_{1m} - \sum_{i=2}^{m} c_{im}Z_i\}^2$, c_{1m} being the constant and $c_{2m},\ldots,c_{mm}$ the coefficients of $Z_2,\ldots,Z_m$, respectively, in the mth order approximation. Thus we determine

$$(3.19)\quad \inf_{c_{1m},\ldots,c_{mm}} E\{Y_1 - c_{1m} - \sum_{i=2}^{m} c_{im}Z_i\}^2 = \inf_{c_{1m},\ldots,c_{mm}} E\{Y_1 - c_{1m} - \sum_{2}^{m} c_{im}(Y_i - Y_1)\}^2$$

$$= \inf_{c_{1m},\ldots,c_{mm}} E\{(1+\sum_{2}^{m} c_{im})Y_1 - c_{1m} - \sum_{2}^{m} c_{im}Y_i\}^2.$$

Equating partial derivatives to zero, we obtain

$$(3.20)\qquad 0 = c_{1m} - (1 + \sum_{i=2}^{m} c_{im})EY_1 + \sum_{i=2}^{m} c_{im}EY_i,$$

and for $j = 2,\ldots,m$,

$$(3.21)\qquad 0 = (1 + \sum_{i=2}^{m} c_{im})EY_1^{\,2} + c_{jm}EY_j^{\,2} + c_{jm}\sum_{\substack{i=2\\ j\neq i}}^{m} EY_iY_j$$

$$-c_{1m}EY_1 - EY_1Y_j(1 + \sum_{i=2}^{m} c_{im})$$

$$-\sum_{i=2}^{m} c_{im}EY_1Y_i + c_{1m}EY_j.$$

Thus

$$(3.22)\qquad c_{1m} = EY_1 + \sum_{i=2}^{m} c_{im}EY_1 - \sum_{i=2}^{m} c_{im}EY_i$$

and $c_{2m},\ldots,c_{mm}$ are obtained as the solution of the system of linear equations

$$(3.23)\qquad 0 = \left(1 + \sum_{i=2}^{m} c_{im}\right) EY_1^{\,2} + c_{jm}\sum_{i=2}^{m} EY_iY_j - (EY_1)^2 - \sum_{i=2}^{m} c_{im}(EY_1)^2$$

$$+\sum_{i=2}^{m} c_{im}EY_1EY_i - \left(1 + \sum_{i=2}^{m} c_{im}\right) EY_1Y_j - \sum_{i=2}^{m} c_{im}EY_1Y_i$$

$$+ EY_1EY_j\left(1 + \sum_{i=2}^{m} c_{im}\right) - \sum_{i=2}^{m} c_{im}EY_iEY_j$$

$$= \left(1 + \sum_{i=2}^{m} c_{im}\right)\left[EY_1^{\,2} - (EY_1)^2 + EY_1EY_j - EY_1Y_j\right]$$

$$+\sum_{i=2}^{m} c_{im}\left[EY_iY_j - EY_iEY_j + EY_1EY_i - EY_1Y_i\right]$$

for $j = 2\ldots, m$. With the notation

$$(3.24)\qquad V_i = V_{ii} = V(Y_i),$$

$$(3.25)\qquad V_{ij} = \mathrm{Cov}(Y_i, Y_j).$$

equation (3.23) becomes

$$(3.26) \qquad \left(1 + \sum_{i=2}^{m} c_{im}\right)\left[V_1 - V_{1j}\right] + \sum_{i=2}^{m} c_{im}(V_{ij} - V_{1i}) = 0.$$

Thus

$$(3.27) \qquad \sum_{i=2}^{m} c_{im}(V_1 - V_{1j} + V_{ij} - V_{1i}) = V_{1j} - V_1 .$$

A matrix representation of the general solution of this system of equations is quite straightforward. Note that

$$\begin{aligned}(3.28)\ V_1 - V_{1j} + V_{ij} - V_{i1} &= E(Y_1^2 - Y_1Y_j + Y_iY_j - Y_iY_1) \\ &\quad - \left[(EY_1)^2 - EY_1EY_j + EY_iEY_j - EY_iEY_1\right] \\ &= E(Y_1 - Y_i)(Y_1 - Y_j) - E(Y_1 - Y_i)\, E(Y_1 - Y_j) \\ &= \mathrm{Cov}(Y_1 - Y_i, Y_1 - Y_j) \\ &= U_{ij} ,\end{aligned}$$

say. Thus the system of equations (3.27) can be written

$$\begin{aligned}(3.29) \qquad \sum_{i=2}^{m} c_{im} U_{ij} &= V_{1j} - V_1 \\ &= \lambda_j ,\end{aligned}$$

say, where $\lambda_j = V_{1j} - V_1$, or, in matrix notation, as

$$(3.30) \qquad \Delta_m c_m = \lambda ,$$

where Δ_m is the $(m-1)x(m-1)$ matrix with elements U_{ij}, c_m is the vector of c_{im}'s, and λ is the vector of λ_j's. Thus the matrix representation

of the general solution is

$$(3.31) \qquad c_m = \Delta_m^{-1} \lambda .$$

An explicit solution of this equation, expressing the c_{im} as functions of α, has not been obtained for general m. It is interesting to note that for the Type III distribution, since the quantity $(\Gamma(\alpha+1)/n)^{2/\alpha}$ factors out of each V_{ij} and this is the only function of n involved in V_{ij}, the vector c_m is independent of n. We next consider the explicit results for m = 2, 3 and 4.

3.3 Approximations of Small Order

For small m, it is possible to express the c_{im} explicitly as functions of n and α. We begin with the case m = 2. For m = 2, equation (3.23) yields

$$(3.32) \qquad c_{22} = \frac{-EY_1^{\,2} + (EY_1)^2 + EY_1Y_2 - EY_1EY_2}{EY_1^2 + EY_2^{\,2} - (EY_1)^2 + 2EY_1EY_2 - 2EY_1Y_2 - (EY_2)^2}$$

$$= \frac{-V_1 + V_{12}}{V_1 + V_2 - 2V_{12}} ,$$

where the notation is as in equations (3.24) and (3.25). Thus, from equations (3.17) and (3.18),

$$(3.33) \quad c_{22} = \left\{ - \Gamma(1+2/\alpha) + \Gamma^2(1+1/\alpha) + \Gamma(1+1/\alpha) \left[\frac{\Gamma(2+2/\alpha)}{\Gamma(2+1/\alpha)} - \Gamma(2+1/\alpha) \right] \right\} \div$$

$$\left\{ \Gamma(1+2/\alpha) - \Gamma^2(1+1/\alpha) + \Gamma(2+2/\alpha) - \Gamma^2(2+1/\alpha) - 2\Gamma(1+1/\alpha) \left[\frac{\Gamma(2+2/\alpha)}{\Gamma(2+1/\alpha)} - \Gamma(2+1/\alpha) \right] \right\}$$

$$= \left\{ -\Gamma(1+2/\alpha) + \Gamma^2(1+1/\alpha) + \frac{\alpha}{\alpha+1} \Gamma(2+2/\alpha) - \Gamma(1+1/\alpha)\, \Gamma(2+1/\alpha) \right\} \div$$

$$\left\{2\left(\frac{\alpha+1}{\alpha}\right)\Gamma(1+2/\alpha) - \left(2+\frac{2}{\alpha}+\frac{1}{\alpha^2}\right)\Gamma^2(1+/\alpha) - 2\left(\frac{\alpha}{\alpha+1}\right)\Gamma(2+2/\alpha)\right.$$

$$\left. + 2\Gamma(1+1/\alpha)\,\Gamma(2+1/\alpha)\right\}$$

$$= \frac{\frac{\alpha}{\alpha+1}\Gamma(1+2/\alpha) - \Gamma^2(1+1/\alpha)}{\frac{2}{\alpha+1}\Gamma(1+2/\alpha) - \frac{1}{\alpha}\Gamma^2(1+1/\alpha)},$$

and, from these and equation (3.22),

$$(3.34)\qquad c_{12} = \left(\frac{\Gamma(\alpha+1)}{n}\right)^{1/\alpha}\Gamma(1+1/\alpha) + c_{22}\left[\left(\frac{\Gamma(\alpha+1)}{n}\right)^{1/\alpha}\Gamma(1+1/\alpha)\right.$$

$$\left. - \left(\frac{\Gamma(\alpha+1)}{n}\right)^{1/\alpha}\Gamma(2+1/\alpha)\right]$$

$$= \left(\frac{\Gamma(\alpha+1)}{n}\right)^{1/\alpha}\Gamma(1+1/\alpha)\left[1+c_{22}\left(1-(1+1/\alpha)\right)\right]$$

$$= \left(\frac{\Gamma(\alpha+1)}{n}\right)^{1/\alpha}\Gamma(1+1/\alpha)\left(1-\frac{c_{22}}{\alpha}\right).$$

For $m = 3$, the solution of the system of equations (3.27) is

$$c_{23} = \frac{1}{D_3}\left[(V_{12}-V_1)(V_1+V_3-2V_{13}) - (V_{13}-V_1)(V_1+V_{23}-V_{12}-V_{13})\right]$$

$$(3.35)\qquad = \frac{1}{D_3}\left[V_3(V_{12}-V_1) - V_{23}(V_{13}-V_1) + V_{13}(V_{13}-V_{12})\right]$$

$$c_{33} = \frac{1}{D_3}\left[V_2(V_{13}-V_1) - V_{23}(V_{12}-V_1) + V_{12}(V_{12}-V_{13})\right],$$

where

$$(3.36)\quad D_3 = (V_1+V_2-2V_{12})(V_1+V_3-2V_{13}) - (V_1-V_{12}+V_{23}-V_{13})^2.$$

To express these results explicitly as functions of α, we use the notation $\Gamma_i = \Gamma(1+i/\alpha)$, and $k_n = [\Gamma(\alpha+1)/n]^{1/\alpha}$. We find. from previous

results, that

$$V_1 = k_n^2\left[\Gamma_2 - \Gamma_1^2\right]$$

$$V_2 = k_n^2\left[\frac{(\alpha+2)}{\alpha}\Gamma_2 - \frac{(\alpha+1)^2}{\alpha^2}\Gamma_1^2\right]$$

$$(3.37)\quad V_3 = k_n^2\left[\frac{(\alpha+1)(\alpha+2)}{\alpha^2}\Gamma_2 - \frac{(2\alpha+1)^2(\alpha+1)^2}{4\alpha^4}\Gamma_1^2\right]$$

$$V_{12} = k_n^2\left[\frac{(\alpha+2)}{(\alpha+1)}\Gamma_2 - \frac{(\alpha+1)}{\alpha}\Gamma_1^2\right]$$

$$V_{13} = k_n^2\left[\frac{2(\alpha+2)}{2\alpha+1}\Gamma_2 - \frac{(2\alpha+1)(\alpha+1)}{2\alpha^2}\Gamma_1^2\right]$$

$$V_{23} = k_n^2\left[\frac{2(\alpha+1)(\alpha+2)}{\alpha(2\alpha+1)}\Gamma_2 - \frac{(\alpha+1)^2(2\alpha+1)}{2\alpha^3}\Gamma_1^2\right].$$

Note that, from equations (3.37),

$$V_{23} = \frac{(\alpha+1)}{\alpha}V_{13}$$

$$(3.38)\quad V_2 = \frac{(\alpha+1)}{\alpha}V_{12}$$

$$V_3 = \frac{(\alpha+1)(2\alpha+1)}{2\alpha^2}V_{13} = \frac{(2\alpha+1)}{2\alpha}V_{23}.$$

Thus

$$D_3c_{23} = V_3(V_{12}-V_1) - V_{32}(V_{13}-V_1) + V_{13}(V_{13}-V_{12})$$

$$= \frac{(\alpha+1)(2\alpha+1)}{2\alpha^2}V_{13}(V_{12}-V_1) - \frac{(\alpha+1)}{\alpha}V_{13}(V_{13}-V_1) + V_{13}(V_{13}-V_{12})$$

$$= V_{13}\left[\frac{(\alpha+1)(2\alpha+1)}{2\alpha^2}(V_{12}-V_1) - \frac{(\alpha+1)}{\alpha}(V_{13}-V_1) + (V_{13}-V_{12})\right]$$

$$= V_{13}\left[-\frac{V_{13}}{\alpha} + \frac{(3\alpha+1)}{2\alpha^2}V_{12} - \frac{(\alpha+1)}{2\alpha^2}V_1\right]$$

$$(3.39)\quad = k_n^2 V_{13}\left\{\left[\frac{-2(\alpha+2)}{\alpha(2\alpha+1)} + \frac{(3\alpha+1)(\alpha+2)}{2\alpha^2(\alpha+1)} - \frac{\alpha+1}{2\alpha^2}\right]\Gamma_2 - \left[\frac{-(2\alpha+1)(\alpha+1)}{2\alpha^3}\right.\right.$$

$$\left.\left. + \frac{(3\alpha+1)(\alpha+1)}{2\alpha^3} - \frac{(\alpha+1)}{2\alpha^2}\right]\Gamma_1^2\right\}$$

$$= k_n^2 V_{13}\left[\frac{-(\alpha-1)}{2\alpha^2(\alpha+1)(2\alpha+1)}\Gamma_2\right]$$

$$= k_n^4 \Gamma_2\left[-\frac{(\alpha-1)(\alpha+2)}{\alpha^2(\alpha+1)(2\alpha+1)^2}\Gamma_2 + \frac{(\alpha-1)}{4\alpha^4}\Gamma_1^2\right]$$

Similarly,

$$(3.40)\quad D_3 c_{33} = k_n^4 \Gamma_2\left[\frac{(\alpha+2)}{\alpha(\alpha+1)^2(2\alpha+1)}\Gamma_2 - \frac{1}{2\alpha^3}\Gamma_1^2\right].$$

To express D_3 in terms of α and the Γ_i, we determine

$$(3.\quad V_1 + V_2 - 2V_{12} = V_1 + \frac{\alpha+1}{\alpha}V_{12} - 2V_{12} = V_1 - \frac{(\alpha-1)}{\alpha}V_{12}$$

$$= k_n^2\left\{\left[1 - \frac{(\alpha-1)(\alpha+2)}{\alpha(\alpha+1)}\right]\Gamma_2 - \left[1 - \frac{(\alpha-1)(\alpha+1)}{\alpha^2}\right]\Gamma_1^2\right\}$$

$$= k_n^2\left[\frac{2}{\alpha(\alpha+1)}\Gamma_2 - \frac{1}{\alpha^2}\Gamma_1^2\right].$$

Similarly,

$$(3.42)\quad V_1 + V_3 - 2V_{13} = k_n^2\left[\frac{7\alpha+2}{\alpha^2(2\alpha+1)}\Gamma_2 - \frac{(3\alpha+1)^2}{4\alpha^4}\Gamma_1^2\right],$$

and

$$(3.43)\quad V_1 - V_{12} + V_{23} - V_{13} = k_n^2\left[\frac{5\alpha+4}{\alpha(\alpha+1)(2\alpha+1)}\Gamma_2 - \frac{3\alpha+1}{2\alpha^3}\Gamma_1^2\right].$$

Thus,

$$(3.44)\quad D_3 = (V_1+V_2-2V_{12})(V_1+V_3-2V_{13}) - (V_1-V_{12}+V_{23}-V_{13})^2$$

$$= k_n^4\left\{\left[\frac{2(7\alpha+2)}{\alpha^3(\alpha+1)(2\alpha+1)} - \frac{(5\alpha+4)^2}{\alpha^2(\alpha+1)^2(2\alpha+1)^2}\right]\Gamma_2^2\right.$$

$$-\left[\frac{(32\alpha^3+39\alpha^2+12\alpha+1)}{2\alpha^5(\alpha+1)(2\alpha+1)} - \frac{2(15\alpha^2+17\alpha+4)}{2\alpha^4(\alpha+1)(2\alpha+1)}\right]\Gamma_2\Gamma_1^2$$

$$\left.+\left[\frac{(3\alpha+1)^2}{4\alpha^6} - \frac{(3\alpha+1)^2}{4\alpha^6}\right]\Gamma_2^4\right\}$$

$$= k_n^4\left[\frac{(\alpha+2)(3\alpha^2+4\alpha+3)}{\alpha^3(\alpha+1)^2(2\alpha+1)^2}\Gamma_2^2 - \frac{(\alpha+1)}{2\alpha^5}\Gamma_1^2\Gamma_2\right].$$

Hence

$$(3.45)\quad c_{23} = -\alpha(\alpha-1)\,\frac{\dfrac{(\alpha+2)}{(\alpha+1)(2\alpha+1)^2}\Gamma_2 - \dfrac{1}{4\alpha^2}\Gamma_1^2}{\dfrac{(\alpha+2)(3\alpha^2+4\alpha+2)}{(\alpha+1)^2(2\alpha+1)^2}\Gamma_2 - \dfrac{\alpha+1}{2\alpha^2}\Gamma_1^2}$$

and

$$(3.46)\qquad c_{33} = \frac{\dfrac{\alpha+2}{(\alpha+1)^2(2\alpha+1)}\Gamma_2 - \dfrac{1}{2\alpha^2}\Gamma_1^2}{\dfrac{(\alpha+2)(3\alpha^2+4\alpha+2)}{\alpha^2(\alpha+1)^2(2\alpha+1)^2}\Gamma_2 - \dfrac{\alpha+1}{2\alpha^4}\Gamma_1^2}$$

Finally,

$$(3.47)\quad c_{13} = (1+c_{23}+c_{33})\,EY_1 - (c_{23}EY_2 - c_{33}EY_3)$$

$$= k_n\Gamma_1 + \left[k_n\Gamma_1 - k_n(1+\tfrac{1}{\alpha})\Gamma_1\right]c_{23} + \left[k_n\Gamma_1 - k_n(2+\tfrac{1}{\alpha})(1+\tfrac{1}{\alpha})\Gamma_1\right]c_{33}$$

$$= k_n \Gamma_1 (1 - \frac{1}{\alpha} c_{23} - \frac{3\alpha+1}{2\alpha^2} c_{33})$$

$$= k_n \Gamma_1 \left[\left(\frac{(\alpha+2)(3\alpha^2+4\alpha+2)}{\alpha^2(\alpha+1)^2(2\alpha+1)^2} + \frac{(\alpha-1)(\alpha+2)}{\alpha^2(\alpha+1)(2\alpha+1)^2} - \frac{(\alpha+2)(3\alpha+1)}{2\alpha^2(\alpha+1)^2(2\alpha+1)} \right) \Gamma_2 \right.$$

$$\left. - \left(\frac{\alpha+1}{2\alpha^4} + \frac{\alpha-1}{4\alpha^4} - \frac{3\alpha+1}{4\alpha^4} \right) \Gamma_1^2 \right]$$

$$\div \left[\frac{(\alpha+2)(3\alpha^2+4\alpha+2)}{\alpha^2(\alpha+1)^2(2\alpha+1)^2} \Gamma_2 - \frac{\alpha+1}{2\alpha^4} \Gamma_1^2 \right]$$

$$= \frac{\frac{\alpha+2}{2(\alpha+1)(2\alpha+1)} k \Gamma_1 \Gamma_2}{\frac{(\alpha+2)(3\alpha^2+4\alpha+2)}{(\alpha+1)^2(2\alpha+1)^2} \Gamma_2 - \frac{\alpha+1}{2\alpha^2} \Gamma_1^2} .$$

Similar tedious algebra leads, for the case m = 4, to

$$c_{24} = - \frac{\alpha(\alpha-1)}{A} \left[\frac{(\alpha+2)(3\alpha+2)}{(2\alpha+1)^2(3\alpha+1)^2} \Gamma_2 - \frac{\alpha+1}{12\alpha^3} \Gamma_1^2 \right], \tag{3.48}$$

$$c_{34} = - \frac{\alpha^2(\alpha-1)}{A} \left[\frac{(\alpha+2)(3\alpha+2)}{(\alpha+1)(2\alpha+1)^2(3\alpha+1)^2} \Gamma_2 - \frac{1}{12\alpha^3} \Gamma_1^2 \right] = \frac{\alpha}{\alpha+1} c_{24} \tag{3.49}$$

$$c_{44} = \frac{3\alpha^3}{A} \left[\frac{\alpha+2}{(\alpha+1)(2\alpha+1)^2(3\alpha+1)} \Gamma_2 - \frac{1}{12\alpha^3} \Gamma_1^2 \right], \tag{3.50}$$

and

$$c_{14} = \frac{k_n \Gamma_1 \Gamma_2 (\alpha+2)}{2(2\alpha+1)(3\alpha+1)A} , \tag{3.51}$$

where

$$A = \frac{2(\alpha+2)(3\alpha^2+3\alpha+2)}{(\alpha+1)(2\alpha+1)(3\alpha+1)^2} \Gamma_2 - \frac{3\alpha^2+4\alpha+2}{12\alpha^3} \Gamma_1^2 . \tag{3.52}$$

The explicit form of the general solution is not apparent from these results. It is interesting to note, however, that for the case $\alpha = 1$, the above reduce to $k_n = \frac{1}{n} = c_{1m}$ and $c_{im} = 0$ for $i \geq 2$ and all m. Thus, in spite of all the approximations, the estimator reduces to $a^* = Y_1 - \frac{1}{n}$, which is known to be the best unbiased estimator for the case $\alpha = 1$.

3.4. Comparison of the Estimators

The improvement attained (asymptotically) by introducing order statistics other than Y_1 into the estimation procedure can be assessed by comparing asymptotic variances. The asymptotic variance of the estimator for general m, say V_m^*, follows readily from the above results. We have, with $\underline{Z}_m$ the vector of Z_i's,

$$(3.53) \qquad V_m^* = V\left(Y_1 - c_{1m} - \sum_{i=2}^{m} c_{im}(Y_i - Y_1)\right)$$

$$= V(Y_1 - c_m' \underline{Z}_m)$$

$$= V(Y_1) - 2\,\mathrm{Cov}\,(Y_1, c_m' \underline{Z}_m) + V(c_m' \underline{Z}_m)$$

$$= V_1 - 2c_m' \,\mathrm{Cov}\,(Y_1, \underline{Z}_m) + c_m' V(\underline{Z}_m) c_m$$

$$= V_1 - 2c_m' \lambda + c_m' \Delta_m c_m$$

$$= V_1 - 2(\Delta_m^{-1} \lambda)' \lambda + (\Delta_m^{-1} \lambda)' \Delta_m (\Delta_m^{-1} \lambda)$$

$$= V_1 - \lambda' \Delta_m^{-1} \lambda.$$

Note that it follows that the improvement, in terms of asymptotic variance, in the estimator achieved by introducing terms up to order m is

$$(3.54) \qquad V_1 - V_m^* = \lambda' \Delta_m^{-1} \lambda.$$

The right-hand side of equation (3.54) is always positive ($\alpha \neq 1$). Furthermore, since on the right-hand side of equation (3.53) the quantity $k_n^2 = (\Gamma(\alpha+1)/n)^{2/\alpha}$ factors out of both terms, it is clear that, so long as m is not a function of n, the order of magnitude of the variance of the estimator involving terms up to order m remains $n^{-2/\alpha}$. The question as to whether the variance remains $\mathcal{O}(n^{-2/\alpha})$ when m increases with n (for example, $m = n^{1/2}$) remains open.

A small numerical study of the improvement in the variance (using the above asymptotic results) by the introduction of higher order terms has been conducted. Note that, given the c_{im}, the numerical calculation of V_m^* is most conveniently performed by use of the relation

$$(3.55) \qquad V_m^* = V_1 - \lambda'\Delta_m^{-1} \lambda$$

$$= V_1 - \lambda' c_m$$

$$= V_1 - \sum_{i=2}^{m} c_{im}(V_{1i} - V_1).$$

The results, for m = 2, 3 and 4 and α = .25, .50, .75, 1.50, 2.00 and 3.00, are given in Tables 3.1 and 3.2. Table 3.1 gives the c_{im} and Table 3.2 $n^{2/\alpha}$ times the asymptotic variance of the approximations to the Pitman estimators and the asymptotic efficiencies relative to Y_1. (Note that $n^{1/\alpha}$ c_{1m} are tabulated. As noted previously, the remaining c_{im} are independent of n.)

Some of the results of Tables 3.1 and 3.2 indicate a number of potentially fruitful topics for further investigation, both analytical

TABLE 3.1

Coefficients, c_{im}, for m = 2, 3 and 4,

in Linear Approximations to the Pitman Estimator

for the Pearson Type III Distribution

α	.25	.50	.75	1.50	2.00	3.00
$n^{1/\alpha}c_{12}$	8.3996	1.0472	.9050	1.2702	1.5249	1.9735
c_{22}	.1204	.1667	.1120	- .2458	- .4334	- .6486
$n^{1/\alpha}c_{13}$	5.1233	.7987	.8132	1.4045	1.7301	2.2225
c_{23}	.7342 (-1)*	.7627 (-1)	.4304 (-1)	- .6314 (-1)	- .8792 (-1)	- .8961 (-1)
c_{33}	.2786 (-1)	.6780 (-1)	.6171 (-1)	- .2002	- .3846	- .6117
$n^{1/\alpha}c_{14}$	3.3715	.6485	.7504	1.5143	1.8997	2.4212
c_{24}	.7309 (-1)	.7569 (-1)	.4291 (-1)	- .6218 (-1)	- .8375 (-1)	- .8004 (-1)
c_{34}	.1462 (-1)	.2523 (-1)	.1839 (-1)	- .3731 (-1)	- .5584 (-1)	- .6003 (-1)
c_{44}	.8672 (-2)	.3440 (-1)	.3993 (-1)	- .1751	- .3579	- .5931

* (-x) indicates that tabulated value is to be multiplied by 10^{-x}.

TABLE 3.2

Asymptotic Variances and Relative Efficiencies of the Approximations to the Pitman Estimator for the Pearson Type III Distribution

α	.25	.50	.75	1.50	2.00	3.00
$n^{2/\alpha}V_1^*$	18,107	12.337	2.0717	.54913	.42920	.34780
$n^{2/\alpha}V_2^*$	16,464	11.515	2.0357	.52505	.37775	.26189
$n^{2/\alpha}V_3^*$	16,184	11.292	2.0224	.51278	.35168	.22259
$n^{2/\alpha}V_4^*$	16,112	11.205	2.0159	.50501	.33502	.19882
V_1^*/V_2^*	1.100	1.071	1.018	1.046	1.136	1.328
V_1^*/V_3^*	1.119	1.093	1.024	1.071	1.220	1.563
V_1^*/V_4^*	1.124	1.101	1.028	1.087	1.281	1.749

and numerical. It is interesting to note, for example, that the c_{im} apparently converge quite rapidly for fixed i as m increases (e.g., for $\alpha = .5$, $c_{22} = .1667$, $c_{23} = .07627$ and $c_{24} = .07569$), and that, for another example, in the non-regular case the minimum observation apparently contains the most significant information relative to the location parameter (the asymptotic variance decreases relatively slowly as additional observations are introduced). We plan to investigate these aspects of the problem more thoroughly in future research. It is not surprising, incidentally, that, in the regular case investigated ($\alpha = 3$), the efficiency increases more rapidly as additional observations are introduced since the maximum likelihood estimator, which is asymptotically efficient in this case, is a function of all of the observations.

Other aspects of the problem of interest for further investigation, particularly in the non-regular case, include the small-sample properties of the approximation to the Pitman estimator and a comparison of the approximations with the exact Pitman estimator. Some Monte Carlo studies of these aspects of the problem are anticipated.

A very interesting and difficult additional topic for further investigation is the problem of estimating a when the remaining parameters, α and β, are unknown. Because of the relative rates of convergence, it is by no means clear that a Pitman-type estimator such as the above can be constructed in the non-regular case when all parameters are unknown. We plan to pursue this aspect, as well, in future investigations. The apparently pathological case of α exactly equal to 2 is an additional challenge of, at least, academic interest.

Finally, we plan to investigate approximations other than the linear one discussed above. The objective of such an investigation would be the derivation of an estimator which converges to (i.e., is asymptotically equivalent to) the exact Pitman estimator.

4. APPLICATION OF THE APPROXIMATIONS OF THE PITMAN ESTIMATOR TO THE WEIBULL DISTRIBUTION

For the Weibull distribution,

$$(4.1) \qquad f(x) = K(x-a)^{K-1} e^{-(x-a)^K} \qquad x > a$$

$$= 0 \qquad \text{otherwise,}$$

the analysis of the Pitman-type estimator is very similar to that given above. Equation (3.31), in fact, provides a general solution for the c_{im}. It remains to express these explicitly as functions of the Weibull shape parameter, K. Because of the nature of the two distributions, these can be expected to be of the same general form as in the Type III case. For the Weibull distribution, however, since the distribution function can be expressed in closed form, the distribution of, and, in fact, the moments of, the order statistics can be determined explicitly for small sample sizes. Thus approximations of the type given in equations (3.8) to (3.18) are not necessary in the Weibull case.

The moments of the Weibull distribution have been derived by Lieblein [10]. The rth moment of the ith order statistic is

$$(4.2) \qquad EY_i^{\,r} = i\binom{n}{i}\Gamma\left(1+\frac{r}{K}\right)\sum_{\nu=0}^{i-1}(-1)^{\nu}\binom{i-1}{\nu}(n+\nu-i+1)^{-1-r/K}.$$

The required cross-moments, with $i < j$, are

$$(4.3) \quad EY_iY_j = \frac{n!}{(i-1)!(j-i-1)!(n-j)!}\sum_{\nu_1=0}^{i-1}\sum_{\nu_2=0}^{j-i-1}(-1)^{\nu_1+\nu_2}\binom{i-1}{\nu_1}\binom{j-i-1}{\nu_2}$$

$$\Psi(j-i+\nu_1-\nu_2, n-j+\nu_2+1),$$

where

$$(4.4)\qquad \psi(s,t) = \left(\frac{1}{st}\right)^{1+1/K} \Gamma\left(2+\frac{2}{K}\right) B_p\left(1+\frac{1}{K},\ 1+\frac{1}{K}\right),$$

$p = s/(s+t)$, and $B_p(.,.)$ is the incomplete Beta-function.

We shall consider the linear approximations of the form given in the previous chapter with $m = 2$ and $m = 3$. The coefficients c_{im} are expressed in terms of the variances and covariances, given, in the notation of the previous chapter, but with $B_p = B_p\left(1+\frac{1}{K},\ 1+\frac{1}{K}\right)$ and $\Gamma_j = \Gamma(1+j/K)$, by

$$(4.5)\qquad V_1 = n^{-2/K}\left(\Gamma_2 - \Gamma_1^{\,2}\right),$$

$$(4.6)\qquad V_2 = \left[n(n-1)^{-2/K} - (n-1)n^{-2/K}\right]\Gamma_2 - \left[n(n-1)^{-1/K} - (n-1)n^{-1/K}\right]^2\Gamma_1^{\,2},$$

$$(4.7)\qquad V_3 = \frac{1}{2}\left[n(n-1)(n-2)^{-2/K} - 2n(n-1)^{-2/K}(n-2) + n^{-2/K}(n-1)(n-2)\right]\Gamma_2$$
$$- \frac{1}{4}\left[n(n-1)(n-2)^{-1/K} - 2n(n-1)^{-1/K}(n-2) + n^{-1/K}(n-1)(n-2)\right]^2\Gamma_1^{\,2},$$

$$(4.8)\qquad V_{12} = (1+2/K)\, n\,(n-1)^{-1/K}\,\Gamma_2 B_{\frac{1}{n}} - n^{-1/K}\left[n(n-1)^{-1/K} - n^{-1/K}(n-1)\right]\Gamma_1^{\,2},$$

$$(4.9)\qquad V_{13} = \frac{1}{2}(1+2/K)\, n\left[(n-1)(2n-4)^{-1/K}B_{\frac{2}{n}} - 2(n-1)^{-1/K}(n-2)B_{\frac{1}{n}}\right]\Gamma_2$$
$$- \frac{1}{2}\, n^{-1/K}\left[n(n-1)(n-2)^{-1/K} - 2n(n-1)^{-1/K}(n-2) + n^{-1/K}(n-1)(n-2)\right]\Gamma_1^{\,2},$$

and

$$(4.10)\qquad V_{23} = \frac{1}{2}(1+2/K)\, n\,(n-1)\left[2(n-2)^{-1/K}B_{\frac{1}{n-1}} - (2n-4)^{-1/K}B_{\frac{2}{n}}\right]\Gamma_2$$
$$- \frac{1}{2}\left[n(n-1)^{-1/K} - n^{-1/K}(n-1)\right]\left[n(n-1)(n-2)^{-1/K} - 2n(n-1)^{-1/K}(n-2)\right.$$
$$\left. + n^{-1/K}(n-1)(n-2)\right]\Gamma_1^{\,2}.$$

The c_{im} are now obtained by substituting these results into equations (3.22) and (3.31). Note that the solutions for the c_{im} are considerably more complex when the exact variances and covariances given in equations (4.5) to (4.10) are employed. Furthermore, the c_{im} will be functions of n for all i. Nonetheless, a small numerical study, including several values of K and n, has been conducted. The results are given in Table 4.1. The numerical evidence suggests that as $n \to \infty$ the c_{im} for the Weibull distribution converge, for $i > 1$, to those computed for the Pearson Type III utilizing asymptotic moments. This, of course, is to be expected since the asymptotic distributions of order statistics from the Weibull and Type III distributions are identical except for a constant factor which cancels out in the derivation of the c_{im} for $i > 1$. It is interesting to note that the convergence is apparently moderately rapid for the values of K investigated. Some further numerical work on the Weibull case is anticipated. In particular, a tabulation of the coefficients c_{im} would be of interest. This is especially true of the case $m = n$, although this case would involve a substantial amount of calculation except for quite small n. Small sample properties of the approximations and a comparison with the exact Pitman estimator would also be of interest. Finally, as in the case of the Pearson Type III distribution, the question of using the Pitman-type estimators, when the shape and scale parameters (the latter having been set equal to unity in the above) are unknown, remains open. We plan to investigate this problem, as well, in future research.

TABLE 4.1

Coefficients, c_{im}, in the Linear Approximation to the Pitman Estimator for the Weibull Distribution

K	n	3	4	10	20	50	100
0.25	$n^4 c_{12}$	18.1586	16.7030	14.0700	13.2381	12.7569	12.6000
	c_{22}	.1997(-1)*	.3518(-1)	.7893(-1)	.9845(-1)	.1113	.1158
	$n^4 c_{13}$	17.1587	14.4507	10.3580	8.9420	8.1224	7.8548
	c_{23}	.1929(-1)	.3342(-1)	.5792(-1)	.6615(-1)	.7065(-1)	.7206(-1)
	c_{33}	.2192(-3)	.1500(-2)	.1155(-1)	.1852(-1)	.2383(-1)	.2579(-1)
0.50	$n^2 c_{12}$	1.5062	1.4581	1.3799	1.3562	1.3423	1.3378
	c_{22}	.6584(-1)	.8710(-1)	.1322	.1490	.1595	.1631
	$n^2 c_{13}$	1.3640	1.2628	1.1066	1.0602	1.0341	1.0252
	c_{23}	.5720(-1)	.6620(-1)	.7535(-1)	.7620(-1)	.7642(-1)	.7630(-1)
	c_{33}	.5112(-2)	.1381(-1)	.4123(-1)	.5378(-1)	.6197(-1)	.6490(-1)
0.75	$n^{4/3} c_{12}$	1.0453	1.0362	1.0215	1.0171	1.0145	1.0137
	c_{22}	.5673(-1)	.6739(-1)	.9419(-1)	.1030	.1084	.1102
	$n^{4/3} c_{13}$	.9877	.9641	.9294	.9199	.9124	.9116
	c_{23}	.4544(-1)	.4720(-1)	.4612(-1)	.4505(-1)	.4348(-1)	.4318(-1)
	c_{33}	.9284(-2)	.1896(-1)	.4249(-1)	.5153(-1)	.5793(-1)	.5989(-1)

*(-x) indicated that tabulated value is to be multiplied by 10^{-x}.

TABLE 4.1

(Continued)

K	n	3	4	10	20	50	100
1.50	$n^{2/3}c_{12}$	1.0409	1.0438	1.0483	1.0495	1.0502	1.0504
	c_{22}	-.1644	-.1848	-.2215	-.2335	-.2409	-.2433
	$n^{2/3}c_{13}$	1.1288	1.1406	1.1514	1.1584	1.1603	1.1610
	c_{23}	-.1107	-.9964(-1)	-.7332(-1)	-.7075(-1)	-.6633(-1)	.6465(-1)
	c_{33}	-.6384(-1)	-.9779(-1)	-.1590	-.1797	-.1919	-.1961
2.00	$n^{1/2}c_{12}$	1.0742	1.0754	1.0774	1.0779	1.0781	1.0782
	c_{22}	-.3145	-.3450	-.3988	-.4162	-.4265	-.4300
	$n^{1/2}c_{13}$	1.2062	1.2149	1.2211	1.2222	1.2229	1.2232
	c_{23}	-.1909	-.1627	-.1165	-.1025	-.9370(-1)	-.9076(-1)
	c_{33}	-.1526	-.2165	-.3199	-.3521	-.3717	-.3782
3.00	$n^{1/3}c_{12}$	1.0914	1.0901	1.0876	1.0869	1.0864	1.0862
	c_{22}	-.5118	-.5482	-.6098	-.6295	-.6411	-.6449
	$n^{1/3}c_{13}$	1.2355	1.2332	1.2272	1.2252	1.2240	1.2236
	c_{23}	-.2635	-.2130	-.1339	-.1111	-.9806(-1)	-.9214(-1)
	c_{33}	-.3016	-.3913	-.5305	-.5722	-.5962	-.6050

5. ADDITIONAL RESULTS ON MINIMUM VARIANCE BOUNDS

This chapter is concerned with a few additional results on special problems in non-regular estimation. Included are the problems of constructing lower bounds on the variance of estimators in the case of densities whose domain is finite and depends on the unknown parameter and for estimators of the parameters of mixtures of uniform distributions. Since relatively little effort has been expended on these problems, the results are incomplete. In particular, many details of the estimation problem have not been considered. One of the more interesting aspects of both problems, however, is the one to be considered, namely, construction of the bounds.

5.1 Construction of a Bound for Densities with Finite Domain

None of the bounds discussed in reference [2] is applicable to estimators of a parameter, say θ, for densities with finite domain depending on θ. An example of such a density is the uniform distribution on $(\theta,\theta+1)$, viz.,

$$(5.1) \qquad f(x,\theta) = 1 \qquad \theta \leq x \leq \theta+1$$
$$= 0 \qquad \text{otherwise.}$$

It is not difficult, however, by use of the same basic ideas involved in the derivation of the Chapman-Robbins and Fraser-Guttman bounds, to construct bounds for densities of this type. Although a more general result can be derived, we shall here consider only the relatively simple density of equation (5.1). The essential additional idea needed to develop a bound for this example is that of approximating the density from inside. This

will avoid the problem of a zero denominator in integrals such as those in the Chapman-Robbins bound.

We proceed as follows. Let

$$(5.2) \qquad f_h(x,\theta) = \frac{1}{1-2h} \qquad \theta+h \leq x \leq \theta+1-h$$

$$= 0 \qquad \text{otherwise,}$$

where $0 < h < \frac{1}{2}$. Suppose that for the family of densities $\{f_h(x,\theta) \mid 0<h<\frac{1}{2}, -\infty<\theta<\infty\}$, the statistic $t = t(X_1,\ldots,X_n)$, where $X_1,\ldots.X_n$ is a sample of size n from $f_h(x,\theta)$, is an unbiased estimator of $\theta+h$, identically in h,θ. Then by an argument exactly as before [2],

$$(5.3) \qquad V(t) \geq \sup_{0<h<\frac{1}{2}} \frac{h^2}{\int_\theta^{\theta+1}\cdots\int_\theta^{\theta+1}[\Pi f_h(x_i,\theta) - \Pi f_0(x_i,\theta)]^2\, \Pi f_0^{-1}(x_i,\theta)\Pi dx_i} .$$

Thus

$$(5.4) \qquad V(t) \geq \sup_{0<h<\frac{1}{2}} \frac{h^2}{\int_\theta^{\theta+1}\cdots\int_\theta^{\theta+1}\Pi[f_h^2(x_i,\theta)\ f_0^{-1}(x_i,\theta)]\Pi dx_i - 1}$$

$$= \sup_{0<h<\frac{1}{2}} \frac{h^2}{\left\{\int_{\theta+h}^{\theta+1-h}\left(\frac{1}{1-2h}\right)^2 dx\right\}^n - 1}$$

$$= \sup_{0<h<\frac{1}{2}} \frac{h^2}{(1-2h)^{-n} - 1} .$$

The maximizing value of h is the solution of

$$(5.5) \qquad 0 = (1-2h)^{-n} - 1 - nh(1-2h)^{-n-1},$$

i.e., of

$$(5.6) \qquad 0 = (1-2h)^{n+1} + nh - 1 + 2h .$$

For large n, the term $(1-2h)^{n+1}$ tends to zero since $0 < h < \frac{1}{2}$, so that an approximate solution of equation (5.6) is $h = \frac{1}{n+2}$. Substitution of this approximate solution into inequality (5.4) yields

$$(5.7) \qquad V(t) \geq \frac{\left(\frac{1}{n+2}\right)^2}{\left(1 - \frac{2}{n+2}\right)^{-n} - 1}$$

$$\doteq \frac{(1/n)^2}{e^2-1}$$

$$= \frac{.157}{n^2} .$$

We shall see that, although this is not an optimal result, it is of the correct order of magnitude in n. (It is therefore not unreasonable to assume that the usual type of generalization to bounds based on higher order differences will give the optimal result.) Although it is easy to construct examples in which this is not the case, for the specific example chosen an optimal estimator can be deduced from simpler considerations. In fact, the statistic $(X_{(1)}, X_{(n)})$, where $X_{(i)}$ is the ith order statistic, is a minimal sufficient statistic for θ. To determine the best linear combination of $X_{(1)}$ and $X_{(n)}$, where "best" is equivalent to minimum variance, unbiased, we need the joint distribution of $X_{(1)}$, $X_{(n)}$, namely,

$$(5.8) \qquad dF_{X_{(1)},X_{(n)}}(x_1,x_n) = n(n-1)[F(x_n) - F(x_1)]^{n-2} dF(x_1)dF(x_n)$$

$$= n(n-1)(x_n-x_1)^{n-2} dx_1 dx_n$$

with $\theta < x_1 < x_n < \theta+1$. Thus the marginal distributions are

$$(5.9) \qquad f_{X_{(1)}}(x_1) = n(1-x_1+\theta)^{n-1} \qquad \theta < x_1 < \theta+1$$

$$= 0 \qquad \text{otherwise,}$$

and

$$(5.10) \qquad f_{X_{(n)}}(x_n) = n(x_n-\theta)^{n-1} \qquad \theta < x_n < \theta+1$$

$$= 0 \qquad \text{otherwise.}$$

We find

$$(5.11) \qquad EX_{(1)} = \int_\theta^{\theta+1} nx(1-x-\theta)^{n-1}dx$$

$$= \theta + \frac{1}{n+1}$$

and

$$(5.12) \qquad EX_{(n)} = \theta + \frac{n}{n+1} .$$

By symmetry we conclude that $V(X_{(1)}) = V(X_{(n)})$. Thus the best linear combination of $X_{(1)}$ and $X_{(n)}$ is evidently

$$(5.13) \qquad \hat{\theta} = \frac{X_{(1)} + X_{(n)} - 1}{2} .$$

To compute $V(\hat{\theta})$, we need $V(X_{(1)})$ and $Cov(X_{(1)}, X_{(n)})$. Since

$$(5.14) \qquad E(1-X_{(1)} + \theta)^2 = \int_\theta^{\theta+1} n(1-x+\theta)^{n+1}dx$$

$$= \frac{n}{n+2} ,$$

we find

$$(5.15)\qquad EX_{(1)}^2 = \frac{n}{n+2} - (1+\theta)^2 + 2(1+\theta)EX_{(1)}$$

$$= \frac{n}{n+2} - (1+\theta)^2 + 2(1+\theta)(\theta + \frac{1}{n+1})$$

$$= \theta^2 + \frac{2}{n+1}\theta + \frac{2}{(n+1)(n+2)} .$$

Similarly, since

$$(5.16)\qquad E(X_{(n)}-X_{(1)})^2 = \int_\theta^{\theta+1}\int_{x_1}^{\theta+1} n(n-1)(x_n-x_1)^n dx_n dx_1$$

$$= \frac{n(n-1)}{(n+1)(n+2)} ,$$

we find

$$(5.17)\qquad EX_{(1)}X_{(n)} = \theta^2 + \theta + \frac{1}{n+2} .$$

It follows from equations (5.11) and (5.12) that

$$(5.18)\qquad V(X_{(1)}) = \theta^2 + \frac{2}{n+1}\theta + \frac{2}{(n+1)(n+2)} - (\theta + \frac{1}{n+1})^2$$

$$= \frac{n}{(n+1)^2(n+2)} = V(X_{(n)}),$$

and from equations (5.11), (5.12) and (5.17) that

$$(5.19)\qquad Cov(X_{(1)},X_{(n)}) = \frac{1}{(n+1)^2(n+2)} .$$

Thus

$$(5.20)\qquad V(\hat{\theta}) = \frac{1}{4}[V(X_{(1)}) + V(X_{(n)}) + 2Cov(X_{(1)},X_{(n)})]$$

$$= \frac{1}{2(n+1)(n+2)}.$$

Hence the optimal bound is evidently, for large n, approximately $1/2n^2$.

5.2 Estimation for a Mixture of Two Uniform Distributions

Suppose $X_1,\ldots,X_n$ are a sample of size n from a mixture of two uniform distributions, defined on $(0,\theta_1)$ and $(0,\theta_2)$, respectively. Recall that the uniform distribution itself presents a non-regular estimation problem. This is also true of a mixture of uniforms. In fact, such mixtures are examples of distributions for which the regularity conditions fail to hold for several parameters. Although we are admittedly a long way from solution of the general problem of non-regular estimation, it is interesting to investigate the additional complexity introduced because of the mixture structure. The mixture to be considered is one of the simplest such distributions. Furthermore, as we shall see, the estimation problem has been partially solved for this example.

The density function of a mixture of two uniform distributions is

$$(5.21)\qquad \begin{aligned} f(x) &= \frac{\alpha_1}{\theta_1} + \frac{\alpha_2}{\theta_2} && 0 \leqq x \leqq \theta_1 \\ &= \frac{\alpha_2}{\theta_2} && \theta_1 < x \leqq \theta_2 \\ &= 0 && \text{otherwise,} \end{aligned}$$

where $0 < \theta_1 < \theta_2 < \infty$, $\alpha_1,\alpha_2 > 0$ and $\alpha_1 + \alpha_2 = 1$. We shall assume that the mixing probabilities α_1,α_2 are known. Although we shall not give a detailed analysis of the estimation problem as far as θ_2 is concerned, it is easy to see that the maximum observation, $X_{(n)}$, is a consistent,

highly accurate estimator of θ_2, having variance of order n^{-2}. In fact $X_{(n)}$ is the maximum likelihood estimator of θ_2. We proceed with the problem of estimating θ_1.

Note firstly that the likelihood function can be written as

$$L = \left(\frac{\alpha_1}{\theta_1} + \frac{\alpha_2}{\theta_2}\right)^R \left(\frac{\alpha_2}{\theta_2}\right)^{n-R}, \tag{5.22}$$

where R = number of $X_i \leq \theta_1$. Thus

$$\log L = R \log\left(\frac{\alpha_1}{\theta_1} + \frac{\alpha_2}{\theta_2}\right) + (n-R) \log\left(\frac{\alpha_2}{\theta_2}\right) \tag{5.23}$$

$$= n \log\left(\frac{\alpha_2}{\theta_2}\right) + R \log\left(1 + \frac{\alpha_1\theta_2}{\alpha_2\theta_1}\right).$$

The maximum likelihood estimator of θ_1 is therefore that value $\theta_1^* = X_{(N)}$ such that

$$\max_{j=1,\ldots,n} j \log\left(1 + \frac{\alpha_1\theta_2}{\alpha_2 X_{(j)}}\right) = N \log\left(1 + \frac{\alpha_1\theta_2}{\alpha_2 X_{(N)}}\right), \tag{5.24}$$

where either θ_2 is also known or $X_{(n)}$ is substituted for θ_2. Note that if we write $Y_j = j \log [1 + (\alpha_1\theta_2/\alpha_2 X_{(j)})]$, then θ_1^* is a function only of $Y_{(n)}$, an extremal order statistic. This suggests, from past experience, that the variance of θ_1^* is of smaller order than n^{-1}. Before proceeding with this analysis, we consider the problem of constructing a lower bound on the variance of estimators of θ_1.

We note that the Chapman-Robbins bound is applicable and that in similar problems it has resulted in bounds of the correct order of magnitude. There are several ways of formulating the Chapman-Robbins bound in this problem. The simplest procedure is evidently to derive the bound in terms of $f(x,\theta_1)$ and $f(x,\theta_1-h)$, with $0 < h < \theta_1$. We find

$$(5.25)\qquad V(t) \le \sup_{0<h<\theta_1} \frac{h^2}{\int_0^{\theta_2}\cdots\int_0^{\theta_2} \prod \left[f^2(x_i,\theta_1-h)f^{-1}(x_i,\theta_1)dx_i\right] - 1}.$$

The integral in the denominator of inequality (5.25) is

$$(5.26)\qquad \left\{\int_0^{\theta_2} f^2(x,\theta_1-h)f^{-1}(x,\theta_1)dx\right\}^n$$

$$= \left\{\int_0^{\theta_1-h}\left(\frac{\alpha_1}{\theta_1-h}+\frac{\alpha_2}{\theta_2}\right)^2\left(\frac{\alpha_1}{\theta_1}+\frac{\alpha_2}{\theta_2}\right)^{-1}dx + \int_{\theta_1-h}^{\theta_1}\left(\frac{\alpha_2}{\theta_2}\right)^2\left(\frac{\alpha_1}{\theta_1}+\frac{\alpha_2}{\theta_2}\right)^{-1}dx\right.$$

$$\left. + \int_{\theta_1}^{\theta_2}\frac{\alpha_2}{\theta_2}\,dx\right\}^n$$

$$= \left\{\left[\left(\frac{\alpha_1}{\theta_1-h}+\frac{\alpha_2}{\theta_2}\right)^2(\theta_1-h) + \left(\frac{\alpha_2}{\theta_2}\right)^2 h + \frac{\alpha_2}{\theta_2}\left(\frac{\alpha_1}{\theta_1}+\frac{\alpha_2}{\theta_2}\right)(\theta_2-\theta_1)\right]\left(\frac{\alpha_1}{\theta_1}+\frac{\alpha_2}{\theta_2}\right)^{-1}\right\}^n$$

$$= \left\{\left[\alpha_1\left(\frac{\alpha_1}{\theta_1-h}+\frac{\alpha_2}{\theta_1}\right)+\frac{\alpha_2}{\theta_2}\right]\left(\frac{\alpha_1}{\theta_1}+\frac{\alpha_2}{\theta_2}\right)^{-1}\right\}^n.$$

Thus

$$(5.27)\qquad V(t) \ge \sup_{0<h<\theta_1} \frac{h^2}{\left[\frac{\alpha_1}{c}\left(\frac{\alpha_1}{\theta_1-h}+\frac{\alpha_2}{\theta_1}\right)+\frac{\alpha_2}{\theta_2}\right]^n - 1},$$

where

$$(5.28)\qquad c = \frac{\alpha_1}{\theta_1}+\frac{\alpha_2}{\theta_2}.$$

Since the exact determination of the bound leads to certain algebraic difficulties, we shall consider only its asymptotic form.

To compute the supremum for large n, we proceed as follows. Consideration of the form of inequality (5.27) suggests that the supremum will occur at a point h which is $\mathcal{O}(1/n)$. Let us therefore make the transformation

$$h = \frac{z\theta_1}{n} . \tag{5.29}$$

The denominator of the right-hand side of inequality (5.27) then becomes

$$\left[\frac{\alpha_1}{c} \left(\frac{\alpha_1}{\theta_1(1-z/n)} + \frac{\alpha_2}{\theta_1} \right) + \frac{\alpha_2}{c\theta_2} \right]^n - 1 \tag{5.30}$$

$$= \left\{ \frac{\frac{\alpha_1\alpha_2}{\theta_1} + \frac{\alpha_2}{\theta_2}}{\frac{\alpha_1}{\theta_1} + \frac{\alpha_2}{\theta_2}} + \frac{\frac{\alpha_1^2}{\theta_1}}{\left(\frac{\alpha_1}{\theta_1} + \frac{\alpha_2}{\theta_2}\right)(1 - z/n)} \right\}^n - 1$$

$$= \left(a + \frac{b}{1-z/n} \right)^n - 1,$$

say. Note that $a + b = 1$. It follows that

$$\lim_{n \to \infty} \left(a + \frac{b}{1-z/n} \right)^n = \lim_{n \to \infty} e^{n \log\left(a + \frac{b}{1-z/n}\right)} \tag{5.31}$$

$$= \exp\left\{ \lim_{n \to \infty} \frac{\log\left(a + \frac{1-a}{1-z/n}\right)}{1/n} \right\}$$

$$= \exp\left\{ \lim_{n \to \infty} \frac{\frac{-1}{a + \frac{1-a}{1-z/n}} \left(\frac{1-a}{(1-z/n)^2} \right) \frac{z}{n^2}}{-1/n^2} \right\}$$

$$= e^{z(1-a)}$$

$$= e^{zb},$$

where L'Hospital's Rule, with n considered a continuous variable, has been employed in the third step of the derivation. It follows that for large n the bound becomes approximately

$$(5.32) \qquad V(t) \geqq \sup_{0<z<n} \frac{z^2\theta_1^{\,2}/n^2}{\exp\{z\alpha_1^{\,2}/\theta_1 c\}-1}$$

$$= \frac{\theta_1^{\,4}c^2}{n^2\alpha_1^{\,4}} \sup_{0<z<n} \frac{\alpha_1^{\,4}z^2/\theta_1^{\,2}c^2}{\exp\{z\alpha_1^{\,2}/\theta_1 c\}-1}$$

$$= \frac{\theta_1^{\,4}c^2}{n^2\alpha_1^{\,4}} \sup_{0<u<\alpha_1^{\,2}n/\theta_1 c} \frac{u^2}{e^u-1} .$$

The supremum required is precisely that encountered in the corresponding analysis in the case of the exponential and uniform distributions. (Cf. reference [2].) From these we conclude that the supremum occurs at approximately $u = 1.5936$ (an acceptable solution if $n > 1.5936\theta_1 c/\alpha_1^{\,2}$; hence for sufficiently large n). By analogy with the previous such analyses, we conclude that

$$(5.33) \qquad V(t) \geqq \frac{.648\theta_1^{\,4}c^2}{n^2\alpha_1^{\,4}}$$

$$= \frac{.648\theta_1^{\,2}}{n^2\alpha_1^{\,2}} \left(1 + \frac{\alpha_2\theta_1}{\alpha_1\theta_2}\right)^2$$

Although this is not an optimal result, the bound is apparently of the correct order of magnitude. From past experience it is conjectured that the Fraser-Guttman will provide, in the limit, the optimal bound.

The solution of the estimation problem itself is given by Chernoff and Rubin [5] in a paper in which this solution enables the authors to attack a more general problem of estimating the location of a discontinuity in density. Chernoff and Rubin derive the maximum likelihood estimator given in equation (5.24) and investigate its asymptotic properties. By a rather complex analysis, they deduce the limiting distribution of $n(\theta_1^* - \theta_1)$ and thereby verify that, in fact, $V(\theta_1^*) = \mathcal{O}(n^{-2})$.

We note that this does not complete the solution of the mixture problem. An estimator of the mixing measure has yet to be constructed. Although this should not be difficult, the problem of determining the joint asymptotic distribution of the estimators could provide some difficulty. This problem may be investigated further in future research.

In addition, other mixtures of non-regular distributions may also be considered. The motivation for this line of investigation is as follows. We have been concerned with distributions, such as the Pearson Type III and Weibull, which have many applications in areas such as life-testing. The specific problem under investigation is that of estimating a location parameter presumably different from the origin. In the life-testing applications this parameter would therefore necessarily be positive. It follows that the distributions considered give zero probability to some non-degenerate interval to the right of the origin. This does not appear to be a very realistic model. In most life-testing applications unusually early failures occasionally occur. If such an unusual observation is obtained, then a very misleading picture of the distribution can result

by using the estimator under consideration in spite of the fact that the given life distribution may fit very well to the remaining data. The problem is further aggravated by the fact that the estimators are chosen on the basis of their asymptotic properties, whereas it is precisely in large samples that such unusual observations can be expected to occur. The fact that early failures may be "unusual" in some applications, i.e., may, in fact, be outliers, suggests that a more appropriate model may be a mixture of distributions with one component of the mixture located at the origin (possibly with small mixing probability) and one component with positive location parameter.

REFERENCES

1. Barankin, E., "Locally Best Unbiased Estimates," Ann. Math. Statist., Vol. 20 (1949), pp. 477-501.

2. Blischke, W. R., Glinski, A. M., Johns, M. V., Jr., Mundle, P. B., and Truelove, A. J., "On Non-Regular Estimation, Minimum Variance Bounds and The Pearson Type III Distribution," Aerospace Research Laboratories Report No. ARL 65-177,1965.

3. Brooks, Samuel H.,"A Comparison of Maximum Seeking Methods," Operations Research, Vol. 7 (1959), pp. 430-457.

4. Chapman, Douglas G., and Robbins, Herbert, "Minimum Variance Estimation Without Regularity Conditions," Ann. Math. Statist., Vol. 22 (1951), pp. 581-586.

5. Chernoff, Herman and Rubin, Herman, "The Estimation of a Discontinuity in Density," Proc. Third Berkeley Symp. Math. Statist. and Probab., Vol. I (1956), pp. 19-37.

6. Cramér, Harald, Mathematical Methods of Statistics, Princeton University Press, 1946.

7. Fraser, D. A. S., and Guttman, Irwin, "Bhattacharyya Bounds Without Regularity Assumptions," Ann. Math. Statist., Vol. 23 (1952), pp. 629-632.

8. Kendall, Maurice G. and Stuart, Alan, The Advanced Theory of Statistics, Vol. 2., Hafner Publishing Company, New York, 1961.

9. Kiefer, J., "On Minimum Variance Estimation," Ann. Math. Statist., Vol. 23 (1952), pp. 627-629.

10. Lieblein, Julius, "On Moments of Order Statistics from the Weibull Distribution," Ann. Math. Statist., Vol. 26 (1955), pp. 330-333.

11. Pitman, E. J. G., "The Estimation of the Location and Scale Parameters of a Continuous Population of Any Given Form," Biometrika, Vol 30 (1939), pp. 391-421.

12. Stein, Charles, "The Admissibility of Pitman's Estimator of a Single Location Parameter," Ann. Math. Statist., Vol. 30 (1959), pp. 970-979.

APPENDIX

COMPUTER PROGRAM FOR CALCULATION OF BOUND

Description of Program

MAIN

The number IKONT is read in. If non-zero, it indicates that tables of values for the g(.,.,.) function follow, and the routine TAPEIN is called to read these in. These quantities are now read in: (All symbols refer to inequality (2.14))

H: Starting value for h

XN: Sample size n (in floating point form)

P: Starting value for p

ALPHA: α

IPRST: If non-zero, certain additional output is printed for debug purposes.

If H = 100.0, this signifies the end of calculations for the current ALPHA value, we call OUTIT, and proceed to the next ALPHA value, if any. These quantities are next read in:

S: Step size for search procedure (initial value)

FINCR: Increment for use in tables of g-function

CST: Cut-off value for use when variation in the variance bound is small

FNQ1: Number of iterations to be performed using interpolation method

FNQ2: Number of iterations to be performed using exact method + FNQ1 (i.e. total number of iterations)

GFAC: Cut-off value for use, in comparison with current gradient of search path, to decide whether to reduce step size

GFLAG2: When non-zero, P is constrained to be unity.

The initial value of the variance bound V is obtained, for the initially specified p,h values, by calling VAR(V). The specified number of interpolation iterations, followed by the specified number of exact iterations, is performed and the resulting variance bound is printed out. The procedure is truncated if the variation in the last experimental design for V becomes sufficiently small. The terminology "experimental design" is used in conformity with most papers on optimum seeking procedures. Each iteration is performed by calling FUDGIT. In the case where P is constrained to be unity, PFUDG is used instead.

FUDGIT

An experimental design, consisting of the four corners of a square is set up. If the design overlaps the experimental boundaries, the design is reduced in size. (The side of the square is always maintained at 0.6 times the step-size. Hence reduction of the size in design always implies reduction in step-size, and vice versa.) The routine VAR(V) is called four times to obtain V at these four experimental points and, if none of the calculated values at the four corners exceeds that at the center, the design is also reduced in size. Finally, a step is taken in the direction of steepest ascent. If this results in improvement, similar steps are taken, until no improvement is observed. If the current point is within step-size of any of the last six, the quantity NRFLAG is set equal to 1 and step-size reduced by the factor 0.6. Otherwise ISTYMI is set equal to 1, and the question of whether to reduce step size is dealt with in the next iteration, once the current gradient of the path is known.

VAR( )

This calculates the variance bound V using equation (2.14), and obtaining the values for g(.,.,.) from GETALL(GVAL1, GVAL2).

GETALL(GVAL1, GVAL2)

This obtains the g(.,.,.) values either by table interpolation, or by calculation exactly in either of two events: (1) If GFLAG is non-zero. (2) If GFLAG2 is non-zero (the P = 1 case, used by the PFUDG routine). In case (1), EXGETL is called, and in case (2) PGETAL is called. These routines are in fact identical, and obtain the g values from the routine G(.,.,.) in a straightforward way. The remainder of this description applies to the interpolation case.

The (p,h) point in question, (p_o, h_o) say, is imbedded within the appropriate square (p_i, h_i), i = 1,...,4, whose corners are integral multiples of the tabular interval, FINCR. According to which quadrant of the square (p_o, h_o) is in, two further points are added, for example,

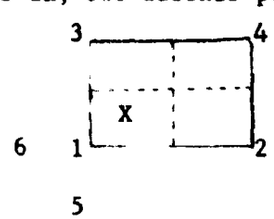

These 6 points determine a quadratic surface, from which the g value at (p_o, h_o) is obtained. The selection of points 5 and 6 is performed by the routine KUSS. The g values for the six points are obtained from the routine SEARCH, described below. The routine PERM orients the points to the standard form:

	2:(0,1)	4:(1,1)
5:(-1,0)	1:(0,0)	3:(1,0)
	6:(0,-1)	

where (.,.) denotes the ordered pair (p,h) with suitable origin. For convenience we shall change variable nomenclature to (x,y). The vector of the g values is denoted by $(Z_i, i=1\ldots6)$. Then we have, for the quadratic surface $A_1x^2 + A_2y^2 + A_3xy + A_4x + A_5y + A_6 = 0$,

$$[A_1,\ldots,A_6]\begin{bmatrix} 0 & 0 & 1 & 1 & 1 & 0 \\ 0 & 1 & 0 & 1 & 0 & 1 \\ 0 & 0 & 0 & 1 & 0 & 0 \\ 0 & 0 & 1 & 1 & -1 & 0 \\ 0 & 1 & 0 & 1 & 0 & -1 \\ 1 & 1 & 1 & 1 & 1 & 1 \end{bmatrix} = [Z_1,\ldots,Z_6],$$

or

$$[A_1,\ldots,A_6] = [Z_1,\ldots,Z_6]\begin{bmatrix} -1 & -1 & 1 & 0 & 0 & 1 \\ 0 & \frac{1}{2} & -1 & 0 & \frac{1}{2} & 0 \\ \frac{1}{2} & 0 & -1 & \frac{1}{2} & 0 & 0 \\ 0 & 0 & 1 & 0 & 0 & 0 \\ \frac{1}{2} & 0 & 0 & -\frac{1}{2} & 0 & 0 \\ 0 & \frac{1}{2} & 0 & 0 & -\frac{1}{2} & 0 \end{bmatrix}$$

Thus

$$A(I) = \sum_{j=1}^{6} Z(J)G(I,J).$$

The G(I,J) entries are read in by means of the routine STRATE. The A(I), I = 1,..., 6, are calculated and used to calculate the g-values at (p_o,h_o). Since two forms of the g function are involved in inequality (2.14), the whole process is carried out for each form, in parallel.

SEARCH

The routine attempts to locate a table entry for a specified (p,h) ordered pair, and, if it does not find one, calculates the value and stores it for future reference. The initial search is made in the section of the table that was read in, corresponding to the p-value. The starting location of this section is stored in IP(1,IPVAL), where IPVAL is p expressed in units of FINCR. If not found there, we search in the blocks (each 10 cells long) whose starting locations are given by IP(2,IPVAL), IP(3,IPVAL),..., IP(10,IPVAL). If the required h-value is found in this search, we take the corresponding values for G(.,.,.), GVAL1, and GVAL2, and return.

If not, we calculate them, using the routines VALUT and VALU2, and store them (using the routine STORE) in the next available location in the storage block -- e.g., the block whose starting location is given by IP(2,IPVAL) -- currently being used (or, if exhausted, assign a new block).

In the storage area TAB(.,.), the h values are stored in TAB(1,.), the first form of g in TAB(2,.), and the second form in TAB(3,.).

G(B,AC,C)

This is a numerical integration routine that calculates the function defined in equation (2.15). It takes special account of the case $\alpha < 1$ where the ordinate tends to infinity as (x-a) tends to zero. Since standard numerical integration methods are used, the routine will not be described in detail.

PFUDG

This is a maximum seeking routine used when p is constrained equal to 1 -- i.e., the search is performed in one dimension, with h the variable.

An auxiliary routine LARMAX is employed. This has been described in the main body of this report. LARMAX uses the same routines described above to obtain calculated values for the $g(\cdot,\cdot,\cdot)$ functions -- no interpolation is employed.

REMAINING ROUTINES

The remaining routines are sufficiently well described by their flow-charts and listings. The flow charts are given in Figures A-1 through A-6, below. A sample input sheet is given in Figure A-7. The listing follows the figures.

Figure A-1: Flow-chart for MAIN routine

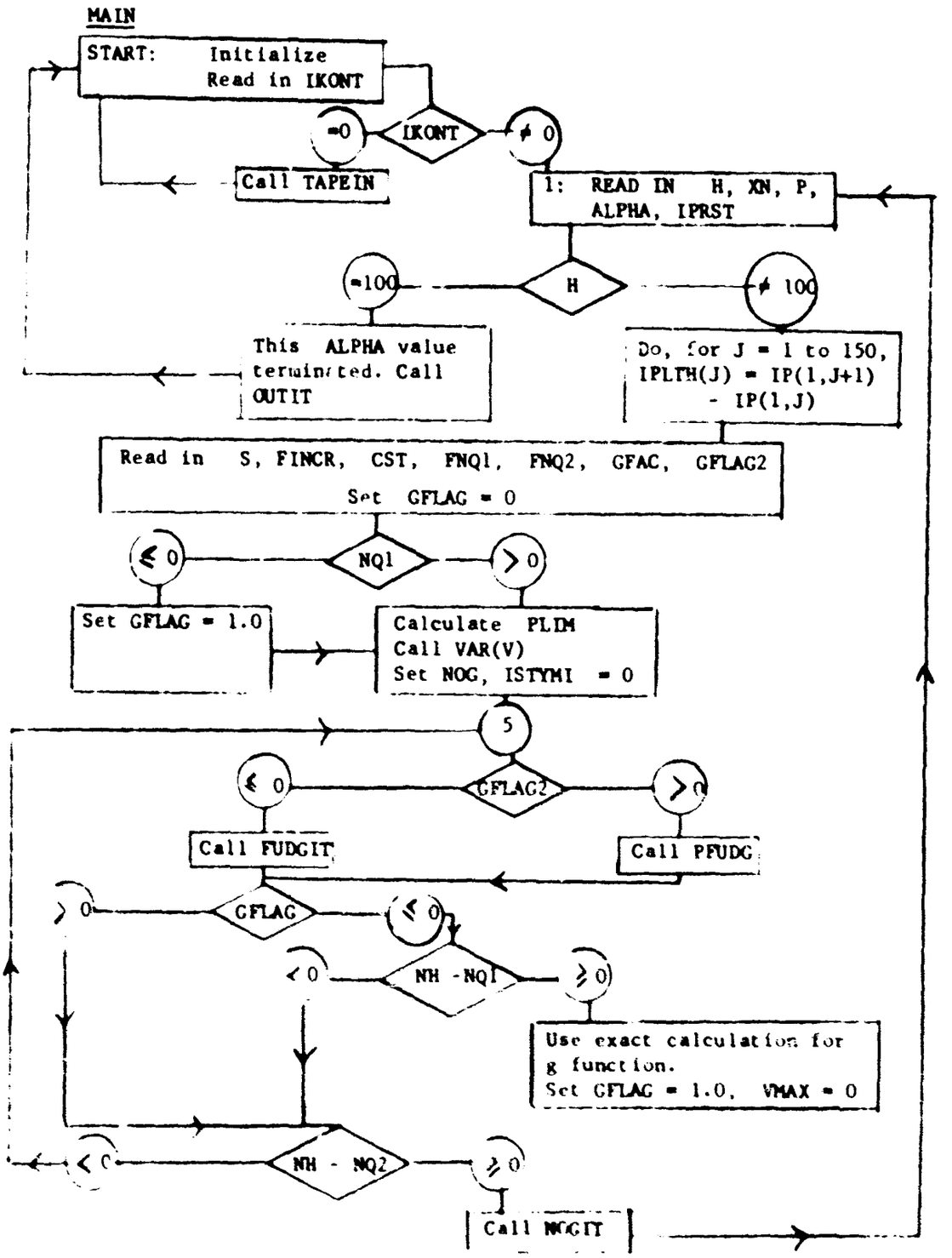

Figure A-2: Flow-chart for FUDGIT Routine

FUDGIT

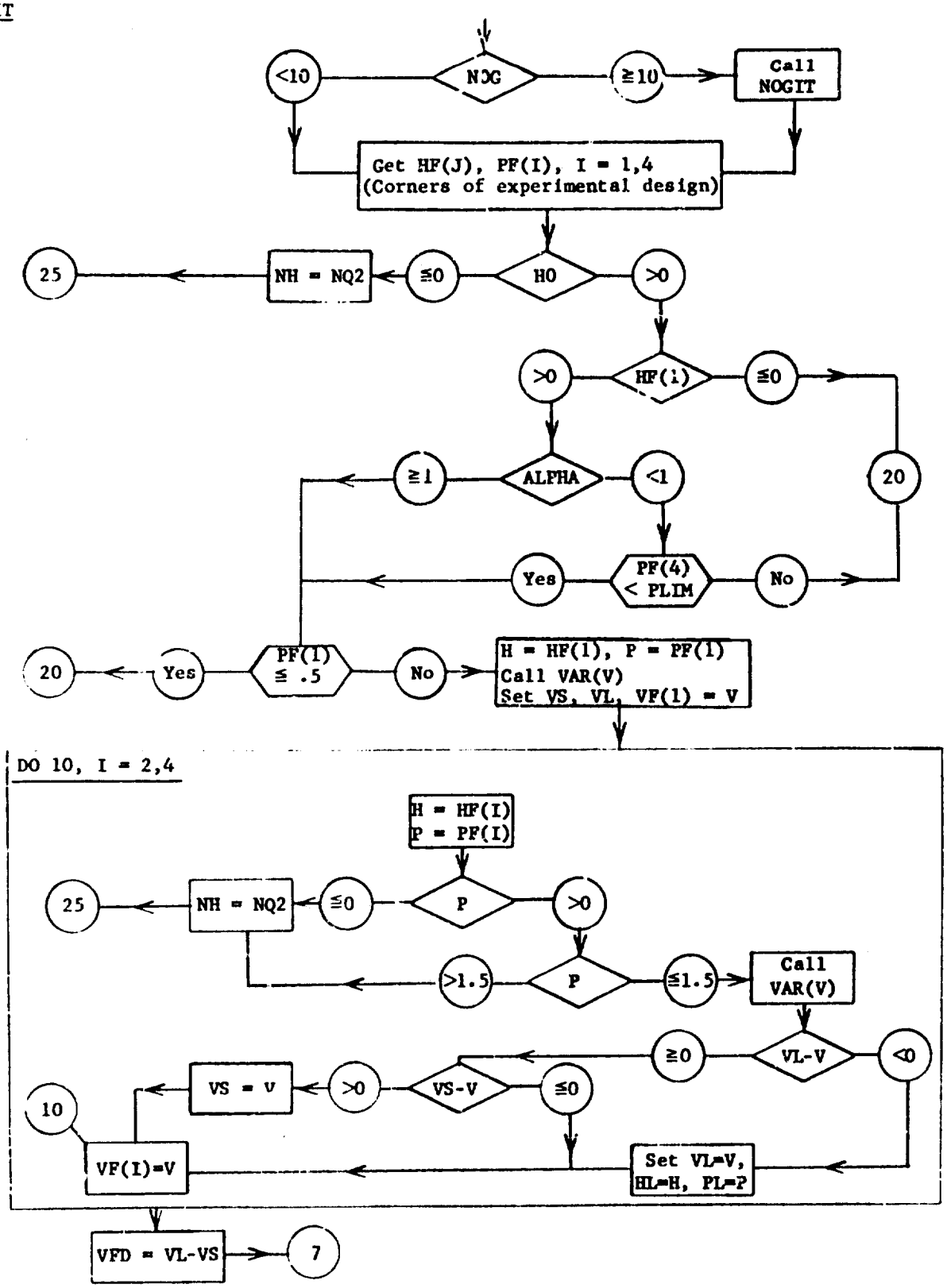

Figure A-2: Flow-chart for FUDGIT (Continued)

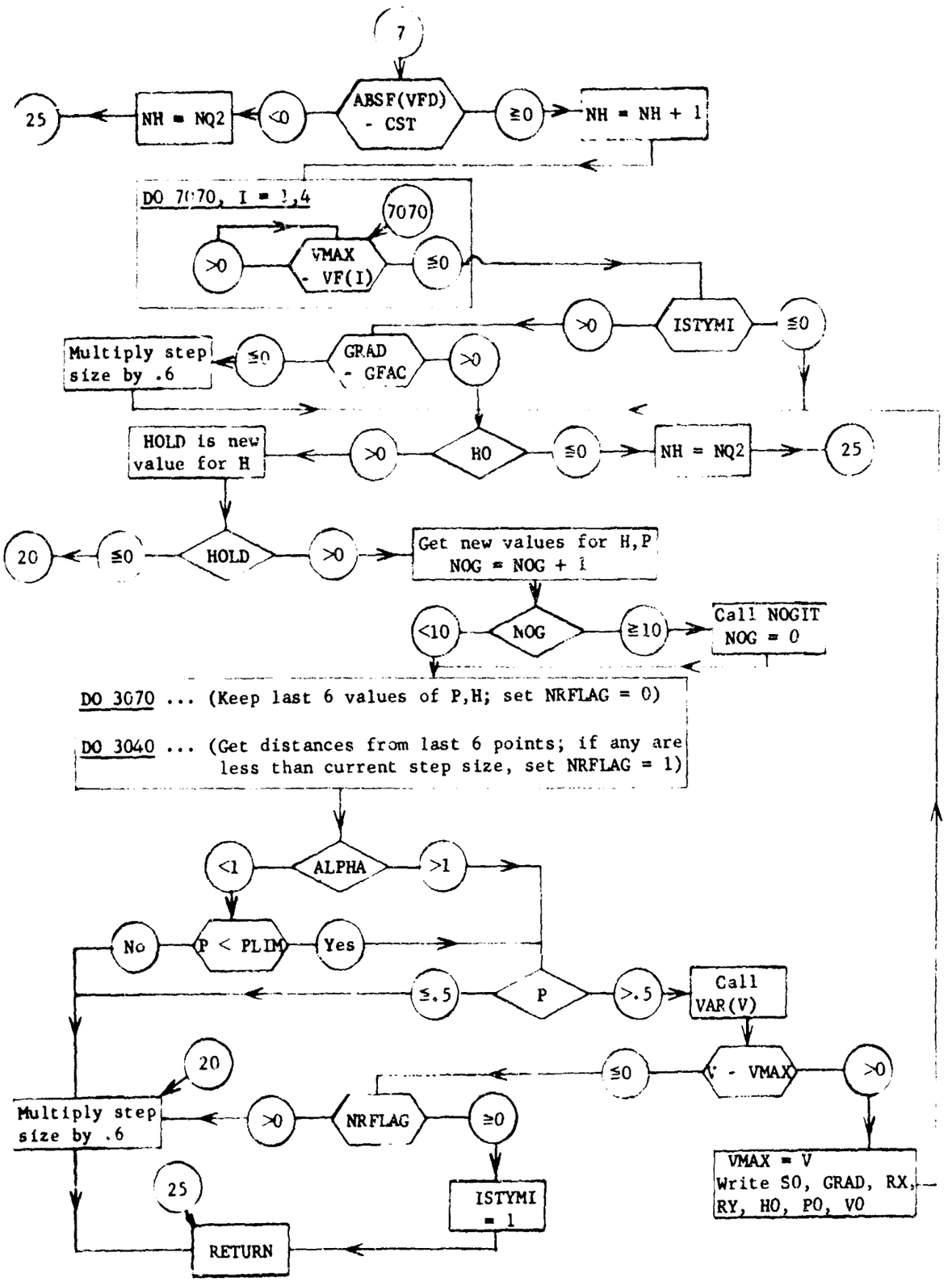

Figure A-3: Flow-chart for VAR routine

VAR(V)

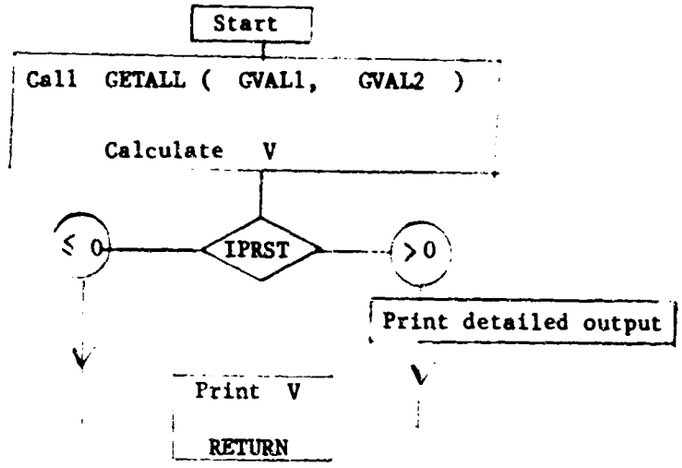

Figure A-4: Flow-chart for GETALL routine

GETALL (GVAL1, GVAL2)

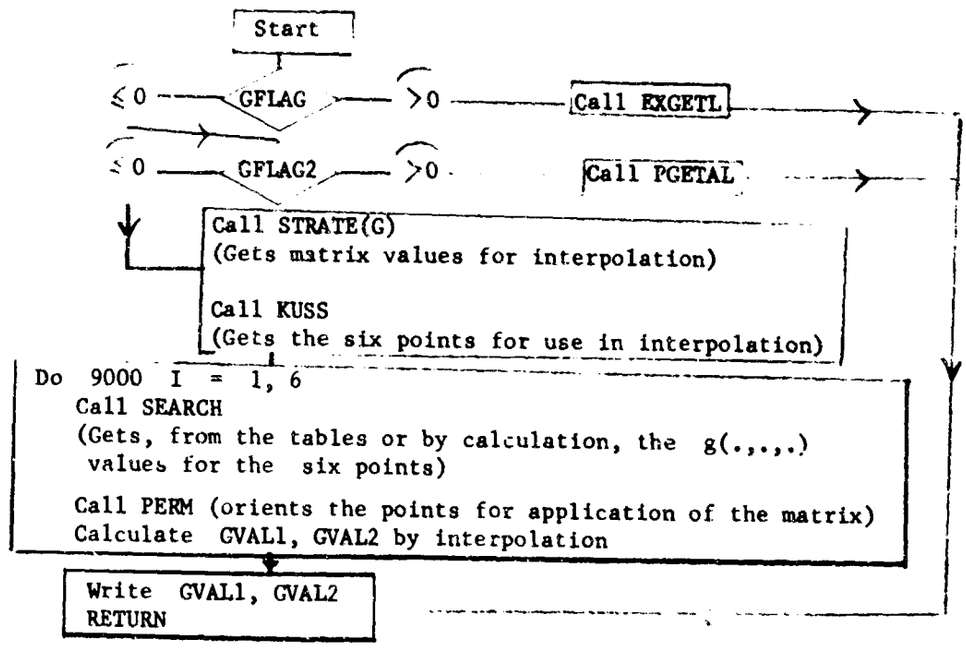

Figure A-5: Flow-chart for TAPEIN routine

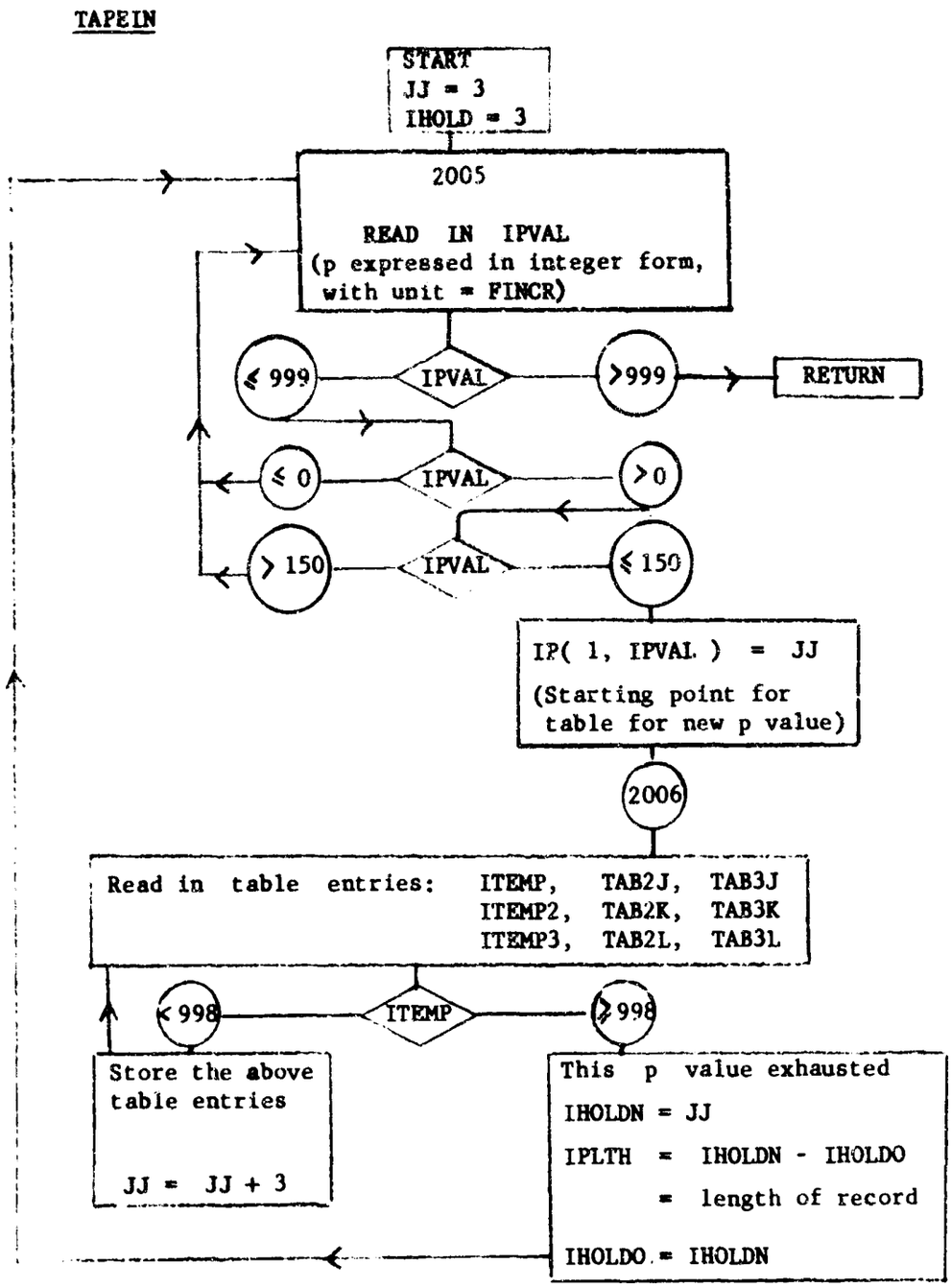

Figure A-6: Program flow-chart

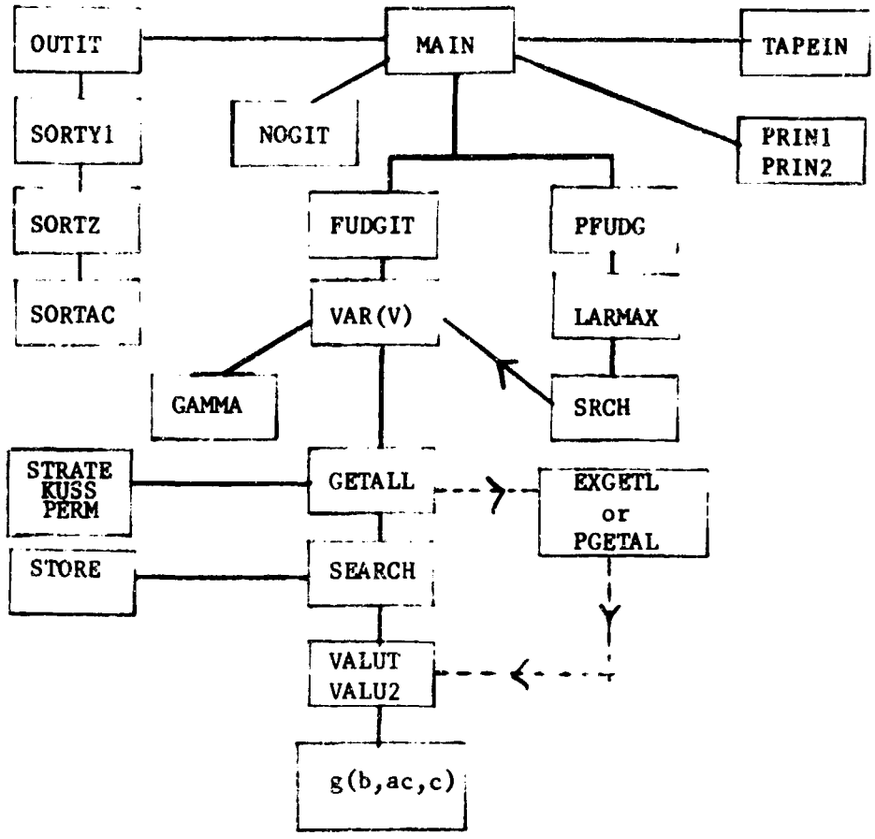

	CARD B					CARD C							
Cols.	1-10*	11-20	21-30	31-40	42	1-10	11-20	21-30	31-40	41-50	51-60	61-70	Date
	1.46	1.0	.6	.5	1	.025	.01	.000001	1.0	5.0	1.0	1.0	Example
Symbol, or Description	h.n	n	p	α	(debug)	Step size	Entry increment	Cut off (Var)	No, steps interp.	No, steps table and exact	Slope cut off	Use PWUDG if 1.	
Program Word	H	XN	P	ALPHA	IPRST	S	FINCR	CST	FNQ1	FNQ2	GFAC	GFLAG2	

*If H = 100.0, go to Start (new Alpha value). Keypunch decimal point in any column of the field.

CARD A: In Column 1, "4" means table values follow, "2" means Cards B,C, follow. After table values, read Card A again.

Fig. A-7: Standard Input Form

```
C          PROGRAM LISTING FOR BOUNDS ON MINIMUM VARIANCE ESTIMATORS
C         C-E-I-R INC, 9171 WILSHIRE BLVD,BEVERLY HILLS,CALIF
C          FOR WRIGHT-PATTERSON  AFB
C          PROGRAMMED BY P MUNDLE  AND A TRUELOVE

C      LIST OF ROUTINES
C
C
C
C MAIN
C FUDGIT
C VAR(V)
C GETALL
C PGETAL
C EXGETL
C STRATE
C PERM
C KUSS
C SEARCH
C STORE
C VALUT
C VALU2
C G(B,AC,C)
C GAMMA
C PFUDG
C LARMAX
C SRCH
C PRIN1
C PRIN2
C OUTIT
C SORTY1
C SORTZ
C NOGIT
C TAPEIN
C BUG
C         LIST OF SHARE LIBRARY ROUTINES USED
C RUMPLOT
C SORTAC
```

```
CMAIN
      COMMON RA,NI,GA,NG,H,XN,P,ALPHA,IPRST
      DIMENSION HF(4),PF(4),VF(4)
      COMMON  FINCR
      COMMON  S,FFF  ,CST,  NQ1,NQ2,FNQ1,FNQ2,GFAC,PLIM,DEL,DD2,NH,PO,
     XHO,VO,VMAX, GFLAG,GFLAG2
      COMMON PVAL,HVAL,IPVAL,IHVAL,ZZ,IGNO,IPHLD,IHLD,LIMIT
      COMMON IPLTH
      DIMENSION IPLTH(151)
      COMMON IP
      DIMENSION  IP(10,151)
      COMMON NUTS
      DIMENSION NUTS(151)
      COMMON YY
      COMMON IHBLC, IARG
      COMMON IGOES,KGOES
      DIMENSION IGOES(151),KGOES(151)
      COMMON ITGOES
      COMMON  POGTAB,HOGTAB,NOG,ISTYMI
      DIMENSION POGTAB(10),HOGTAB(10)
      COMMON TAB
      DIMENSION TAB(3,1000)

 1001 CONTINUE
C     INITIALISE
      ITGOES = 0
      DO 777 I = 1,151
      KGOES(I)  =  0
      IGOES(I) = 0
 777  CONTINUE
      DO 888 I= 1,10
      POGTAB(I) = 0.0
      HOGTAB(I) = 0.0
      DO 666 J= 1,151
      IP(I,J)  = 0
 666  CONTINUE
 888  CONTINUE
      DO 999 I = 1,1000
      DO 997  J=1,3
      TAB(J,I)  = 0.0
 997  CONTINUE
```

```
 999  CONTINUE
 9001 READ INPUT TAPE  5, 9010, IKONT
 9010 FORMAT(I1)
C     TAPE ENTRY
      IF(IKONT-4)  9030,9031,9030
 9030 CONTINUE
 9020 CONTINUE
      GO TO 1
 9031 CONTINUE
      CALL TAPEIN
      GO TO 9001
 1    READ INPUT TAPE 5, 100, H, XN, P, ALPHA, IPRST
 100  FORMAT(4F10.6,I2)
      IF(H-100.)  6666,6667,6666
 6667 CONTINUE
C  NEW ALPHA VALUE
      CALL OUTIT
      GO TO 1001
 6666 CONTINUE
      CALL              PRIN1(ALPHA,XN)
      DO 4013  J=1,150
      IPLTH(J)=  IP(1,J+1)  -  IP(1,J)
C     STORE BACKWARDS
 4013 CONTINUE
      READ INPUT TAPE 5,  199,S,FINCR,CST,FNQ1,FNQ2,GFAC
     X,GFLAG2
 199  FORMAT(7F10.6)
      WRITE OUTPUT TAPE  6,4999
 4999 FORMAT(1H ,  30HTABLE INTERP FOR G FNS                    )
      H = H / XN
      PVAL = P
      HVAL = H
      PVAL = PVAL + 0.000001
      HVAL = HVAL + 0.000001
      IPVAL= PVAL * ( 1.0/FINCR)
      IHVAL = HVAL * (1.0/FINCR)
      NQ1=FNQ1+.001
      NQ2=FNQ2+.001
      NSM = NQ1 +  NQ2
      GFLAG=0.
      IF (NQ1)  8048,8048,8049
```

```
8048 GFLAG = 1.0
8049 CONTINUE
     PLIM =          1.0  / (2.0 * (1.0 - ALPHA))
     DEL = .6 * S
     DD2 = DEL / 2.0
     NH = 1
     PO = P
     HO = H
     CALL VAR(V)
     VO = V
     VMAX = V
     NOG=0
     ISTYMI=0
5    CONTINUE
     IF(GFLAG2) 7900,7900,7901
7901 CONTINUE
     CALL PFUDG
     GO TO 7905
7900 CONTINUE
     CALL FUDGIT
7905 CONTINUE
     NM = NH - 1
     CALL PRIN2(NM,NSM)
     IF ( GFLAG ) 6069,6069,6060
6069 CONTINUE
     IF(NH-NO1)  6060,6061,6061
6061 CONTINUE
C  USE EXCAT CALCULATION FOR G FN
     WRITE OUTPUT TAPE 6, 4888
4888 FORMAT(1H ,30HEXCAT CALC FOR G FN                    )
     GFLAG=1.
     VMAX = 0.0
6060 CONTINUE
     IF(NH-NO2)  7060,7061,7061
7060 CONTINUE
     GO TO 5
7061 CONTINUE
50   HL = HL * XN
     WRITE OUTPUT TAPE 6,200, NH, HL, PL, S, VL , VFD
200  FORMAT(10H-      NH =I3,10H      H*N =F8.5,10H        P =F8.5,
    110H        S =F8.5,10H     V*N2 =E14.8,10H      VFD =E14.8)
```

```
C          WRITE TABS ON TAPE
      CALL MOGIT
      GO TO 1
      END
```

```
      SUBROUTINE FUDGIT
      COMMON RA,NI,GA,NG,H,XN,P,ALPHA,IPRST
      DIMENSION HF(4),PF(4),VF(4)
      COMMON  FINCR
      COMMON  S,FFF  ,CST,  NQ1,NQ2,FNQ1,FNQ2,GFAC,PLIM,DEL,DD2,NH,PO,
     XHO,VO,VMAX, GFLAG,GFLAG2
      COMMON PVAL,HVAL,IPVAL,IHVAL,ZZ,IGNO,IPHLD,IHLD,LIMIT
      COMMON IPLTH
      DIMENSION IPLTH(151)
      COMMON IP
      DIMENSION  IP(10,151)
      COMMON NUTS
      DIMENSION NUTS(151)
      COMMON YY
      COMMON IHBLC, IARG
      COMMON IGOES,KGOES
      DIMENSION IGOES(151),KGOES(151)
      COMMON ITGOES
      COMMON  POGTAB,HOGTAB,NOG,ISTYNI
      DIMENSION POGTAB(10),HOGTAB(10)
      COMMON TAB
      DIMENSION TAB(3,1000)

      DIMENSION PP(6),HH(6)
      NOG=NOG+1
      POGTAB(NOG)=PO
      HOGTAB(NOG)=HO
      IF(NOG-10)  4040,4041,4041
4041  CONTINUE
      NOG=0
      CALL NOGIT
4040  CONTINUE
5     HF(1) = HO - DD2
      PF(1) = PO - DD2
      HF(2) = HO + DD2
      PF(2) = PO - DD2
      HF(3) = HO - DD2
      PF(3) = PO + DD2
      HF(4) = HO + DD2
      PF(4) = PO + DD2
      IF  ( HO)  8092,8092,8093
```

```
8092 NH = NQ2
     GO TO 25
8093 CONTINUE
     IF ( HF(1) )  7050,7050,7051
7050 GO TO 20
7051 CONTINUE
     WRITE OUTPUT TAPE 6, 150
150  FORMAT(1H1)
     IF(ALPHA - 1.0)2,3,3
2    IF(PF(4) - PLIM)3,20,20
3    IF(PF(1) - .5)20,20,4
4    H = HF(1)
     P = PF(1)
     HL = H
     PL = P
     PVAL = P
     HVAL = H
     PVAL = PVAL + 0.000001
     HVAL = HVAL + 0.000001
     IPVAL= PVAL * ( 1.0/FINCR)
     IHVAL = HVAL * (1.0/FINCR)
     CALL VAR(V)
     VS = V
     VL = V
     VF(1) = V
     DO 10 I = 2,4
     H = HF(I)
     P = PF(I)
     PVAL = P
     HVAL = H
     PVAL = PVAL + 0.000001
     HVAL = HVAL + 0.000001
     IPVAL= PVAL * ( 1.0/FINCR)
     IHVAL = HVAL * (1.0/FINCR)
     IF (P)  1077,1077,1078
1078 IF ( P - 1.5 ) 2077,2077,2078
1077 CONTINUE
     WRITE OUTPUT TAPE 6,
    X199
     NH=NQ2
     GO TO 25
```

```
2078 CONTINUE
     WRITE OUTPUT TAPE 6,
    X299
     NH=NQ2
     GO TO 25
199  FORMAT(1H , 20HP LESS THAN 0                          )
299  FORMAT(1H ,20HP MORE THAN 1                    )
2077 CONTINUE
     CALL VAR(V)
     IF(VL - V)6,7,7
6    VL = V
     HL = H
     PL = P
     GO TO 10
7    IF(VS - V)10,10,8
8    VS = V
10   VF(I) = V
     VFD = VL - VS
     IF(ABSF(VFD) -  CST    )50,12,12
50   NH=NQ2
     GO TO 9050
12   CONTINUE
15   NH = NH + 1
     DO 7070  I = 1,4
     IF ( VMAX -  VF(I)  )  7069,7069,  7070
7070 CONTINUE
7072 GO TO 20
7069 CONTINUE
     RX = (VF(4) - VF(3) + VF(2) - VF(1)) / (2.0 * DEL)
     RY = (VF(4) - VF(2) + VF(3) - VF(1)) / (2.0 * DEL)
     GRAD = SQRTF(RX * RX + RY * RY)
     IF(ISTYMI)  6050,6050,6051
6051 CONTINUE
     IF(GRAD-GFAC) 6070,6070,6071
6070 CONTINUE
     S=DEL
     SS=S**2
     DEL=.6*S
     DD2=DEL/2.0
     ISTYMI=0
6071 CONTINUE
```

```
6050 CONTINUE
16   CONTINUE
     IF ( HO)  8095,8095,8096
8095 NH = NQ2
     GO TO 25
8096 CONTINUE
     HOLD  =  HO +  RX * S / GRAD
     IF (HOLD) 9065,9065,8091
9065 GO TO 20
8091 CONTINUE
     HO = HO + RX * S / GRAD
     PO = PO + RY * S / GRAD
     NOG=NOG+1
     POGTAB(NOG)=PO
     HOGTAB(NOG)=HO
     IF(NOG-10) 8040,8041,8041
8041 CONTINUE
     NOG=0
     CALL NOGIT
8040 CONTINUE
     H = HO
     P = PO
     PVAL = P
     HVAL = H
     DO 3070  I=1,5
     IBIT = 7 - I
     JBIT = 6-I
     PP(IBIT) = PP(JBIT)
     HH(IBIT) = HH(JBIT)
3070 CONTINUE
     HH(1)=H
     PP(1)=P
     NRFLAG = 0
     DO 3040  I=1,6
     HOLD= (P-PP(I))**2  +  (H-HH(I))**2
     IF (HOLD-SS)  3041,3041,3042
3041 NRFLAG=1
3042 CONTINUE
3040 CONTINUE
     IF(ALPHA - 1.0)22,23,23
22   IF(P - PLIM)23,20,20
```

```
23    IF(P - .5)20,20,17
17    CALL VAR(V)
      VO = V
      SO = S
      IF(V - VMAX)19,19,18
18    VMAX = V
      WRITE OUTPUT TAPE 6, 250, SO,GRAD, RX, RY, HO, PO, VO
      GO TO 16
19    CONTINUE
      IF(NRFLAG)          9851,9851,20
9851  CONTINUE
      ISTYMI=1
      GO TO 25
20    S = DEL
      SS=S**2
      DEL = .6 * S
      DD2 = DEL / 2.0
25    WRITE OUTPUT TAPE 6, 250, SO,GRAD. RX, RY, HO, PO, VO
250   FORMAT(10HO      SO =F8.5,10H    GRAD =F8.5,10H       RX =F8.5,
     110H       RY =F8.5,6H  HO =F8.5,6H  PO =F8.5,6H  VO =E14.8)
9050  CONTINUE
      RETURN
      END
```

```
SUBROUTINE VAR(V)
COMMON RA,NI,GA,NG,H,XN,P,ALPHA,IPRST
COMMON FINCR
IFCTR = 0
TENFIF = 10.0**15.0
TENPL = 10.0**30.0
TENMI = 1.0/TENPL
N = XN
PP = P * ALPHA - P + 1.0
PNP = P ** (2.0 * XN * PP)
PPA = 2.0 * PP - ALPHA
P2 = 2.0 * P
PM1 = P2 - 1.0
PM1NP = PM1 ** (XN * PPA)
B = PM1 * H
HN = H * XN
P1 = 1.0 - P
P1HN = P1 * HN
PP1 = P / P1
A1 = ALPHA - 1.0
AC1 = P2 * A1
AC2 = P * A1
P1A1 =  P1 * A1
EHN = EXPF(HN)
EPHN = EXPF(P1HN)
PVAL=P
HVAL=H
CALL GETALL(GVAL1,GVAL2)
N1 = NI
N2 = NI
GRP2 = RA
GRPP1 = RA
GVAL = GVAL1
GP2=GVAL
GVAL = GVAL2
GPP1=GVAL
GMA = GAMMA(ALPHA)
GMPP = GAMMA(PP)
GMPA = GAMMA(PPA)
GP2N = 1.0
GMPAN = 1.0
```

```
      GPP1N = 1.0
      DO 1600  I =  1,N
      GP2N  =  GP2N * GP2
      GMPAN = GMPAN * GMPA
      GPP1N = GPP1N*GPP1
 1605 CONTINUE
      IF ( GP2N - TENFIF )  1610,1610, 1602
 1610 IF ( GMPAN - TENFIF ) 1620,1620, 1602
 1620 IF ( GPP1N - TENFIF )  1600,1600,1602
 1602 IFCTR = IFCTR - 1
      GP2N = GP2N * 0.1
      GMPAN = GMPAN * 0.1
      GPP1N = GPP1N * 0.1
      GO TO 1605
 1600 CONTINUE
      GMAN = 1.0
      DO 1800 I = 1,N
      GMAN = GMAN * GMA
 1805 CONTINUE
      IF (GMAN - TENFIF )  1800,1800,1802
 1802 IFCTR = IFCTR - 1
      GMAN = GMAN * 0.1
      GO TO 1805
 1800 CONTINUE
      I2N = 2*N
      GMPPN = 1.0
      DO 1900 I = 1,I2N
      GMPPN = GMPPN * GMPP
 1905 CONTINUE
      IF ( GMPPN - TENFIF)  1900,1900,1902
 1902 IFCTR = IFCTR + 1
      GMPPN = GMPPN * 0.1
      GO TO 1905
 1900 CONTINUE
      VN = H * H * PM1NP * GMPPN
      VD = GMAN * PNP
      VR1 = EHN * GP2N
      VR2 = 2.0 * EPHN * GPP1N
      VR3 = GMPAN
      VF = VN / VD
      VI = VR1 - VR2 + VR3
```

```
      V = VF * XN * XN / VI

750   IF  ( IFCTR)  700,701,702
700   IF (V - TENMI )  701,701, 705
705   V = V* 0.1
      IFCTR = IFCTR + 1
      GO TO 750
702   IF ( V - TENPL ) 707,701,701
707   V = V * 10.0
      IFCTR = IFCTR - 1
      GO TO 750
701   CONTINUE

      HN = H * XN
      WRITE OUTPUT TAPE 6, 200, N,HN, P, ALPHA, GRP2, GRPP1, N1, N2
200   FORMAT(8H0    N =I3,8H   H*N =F10.6,8H     P =F10.6,12H     ALPHA
     1=F10.6,11H     GRP2 =E12.6,12H     GRPP1 =E12.6,4H N1=I2,4H N2=I2)
      IF(IPRST)30,30,20
20    WRITE OUTPUT TAPE 6, 310, PM1, PPA, PM1NP, PP, GMPA, GMPAN
310   FORMAT(8H0  PM1 =F12.8,8H   PPA =F12.8,8H PM1NP =F12.8,
     18H    PP =F12.8,8H  GMPA =F12.8,8H GMPAN =F12.8)
      WRITE OUTPUT TAPE 6, 320, GMA, GMAN, PNP, GA, NG
320   FORMAT(8H   GMA =F12.8,8H  GMAN =F12.8,8H   PNP =F12.8,8H    GA =
     1E12.6,6H  NG =I4)
      WRITE OUTPUT TAPE 6, 330, EHN, B, GP2, GP2N
330   FORMAT(8H   EHN =F12.8,8H     B =F12.8,8H   GP2 =F12.8,
     18H  GP2N =F12.8)
      WRITE OUTPUT TAPE 6, 340, P1HN, EPHN, PP1, P1A1, GPP1, GPP1N
340   FORMAT(8H  P1HN =F12.8,8H  EPHN =F12.8,8H   PP1 =F12.8,
     18H  P1A1 =F12.8,8H  GPP1 =F12.8,8H GPP1N =F12.8)
      WRITE OUTPUT TAPE 6, 350, GMPP, GMPPN
350   FORMAT(8H  GMPP =F12.8,8H GMPPN =F12.8)
30    WRITE OUTPUT TAPE 6, 360, VN, VD, VR1, VR2, VR3
360   FORMAT(8H0   VN =F12.8,8H    VD =F12.8,8H   VR1 =F12.8,
     18H   VR2 =F12.8,8H   VR3 =F12.8)
      WRITE OUTPUT TAPE 6, 370, VF, VI, V
370   FORMAT(8H    VF =E14.8,8H    VI =E14.8,8H     V =E14.8)
      WRITE OUTPUT TAPE  6,390, IFCTR
390   FORMAT(  8H  IFCTR=     , I8  )
      RETURN
      END
```

```
      SUBROUTINE GETALL(GVAL1,GVAL2)
      COMMON RA,NI,GA,NG,H,XN,P,ALPHA,IPRST
      DIMENSION HF(4),PF(4),VF(4)
      COMMON  FINCR
      COMMON  S,FFF  ,CST,  NQ1,NQ2,FNQ1,FNQ2,GFAC,PLIM,DEL,DO2,NH,PO,
     XHO,VO,VMAX, GFLAG,GFLAG2
      COMMON PVAL,HVAL,IPVAL,IHVAL,ZZ,IGNO,IPHLD,IHLD,LIMIT
      COMMON IPLTH
      DIMENSION IPLTH(151)
      COMMON IP
      DIMENSION  IP(10,151)
      COMMON NUTS
      DIMENSION NUTS(151)
      COMMON YY
      COMMON IHBLC, IARG
      COMMON IGOES,KGOES
      DIMENSION IGOES(151),KGOES(151)
      COMMON ITGOES
      COMMON  POGTAB,HOGTAB,NOG,ISTYMI
      DIMENSION POGTAB(10),HOGTAB(10)
      COMMON TAB
      DIMENSION TAB(3,1000)

      DIMENSION  X(10),Y(10),XX(10),QQ(10),Z(10),       A(10) , G(6,6)
      DIMENSION B(10)

      IF (GFLAG)  70,70,71
71    CONTINUE
      CALL EXGETL(GVAL1,GVAL2)
      GO TO 7003
70    CONTINUE
      IF(GFLAG2) 7900,7900,7901
7901  CONTINUE
      CALL PGETAL( GVAL1, GVAL2)
      GO TO  7003
7900  CONTINUE

      CALL STRATE(G)
      PST=PVAL
      HST=HVAL
      PVAL=PVAL+0.000001
```

```
      HVAL=HVAL+0.000001
      CALL KUSS(PVAL,HVAL,XX,QQ,FINCR,KISS,JISS)
      DO 9000 I=1,6
      PVAL=XX(I)
      HVAL = QQ( I )
      PVAL=PVAL+0.000001
      HVAL=HVAL+0.000001
      CALL SEARCH
      Z(I)=ZZ
      Y(I)  =  YY
 9000 CONTINUE
      IF(KISS)  101,    101,102
 101  IF(JISS)  201,     201,202
 102  IF(JISS)  301,    301,302
 201  CONTINUE
      CALL PERM(Z,1,3,2,4,6,5)
      CALL PERM(Y,1,3,2,4,6,5)
      XV=PST-XX(1)
      YV=HST-QQ(1)
      GO TO 9400
 202  CONTINUE
      CALL PERM(Y,3,4,1,2,5,6)
      CALL PERM (Z, 3,4,1,2,5,6)
      XV=QQ(3)-HST
      YV=PST-XX(3)
      GO TO 9400
 301  CONTINUE
      CALL PERM(Z,2,1,4,3,6,5)
      CALL PERM(Y,2,1,4,3,6,5)
      XV=HST-QQ(2)
      YV=XX(2)-PST
      GO TO 9400
 302  CONTINUE
      CALL PERM(Z,4,2,3,1,6,5)
      CALL PERM(Y,4,2,3,1,6,5)
      XV=XX(4)-PST
      YV=QQ(4)-HST
      GO TO 9400
 9400 CONTINUE
      XV=XV/FINCR
      YV=YV/FINCR
```

```
      DO 300 I=1,6
      HOLD =0.
      HOLD2 = 0.0
      DO 400 J=1,6
      HOLD=HOLD+G(I,J)*Z(J)
      HOLD2 = HOLD2 +  G(I,J) * Y(J)
      A(I)=HOLD
      B(I) = HOLD2
400   CONTINUE
300   CONTINUE
      CALL BUG(HOLD)
      IF(HOLD)  27,27,28
28    CONTINUE
      WRITE OUTPUT TAPE 6,220,  (A(I),I=1,6)
220   FORMAT( 1H , 6(E12.4,2X) )
27    CONTINUE
      ZV=A(1)*XV**2  + A(2)*YV**2 + A(3)*XV*YV + A(4)*XV+A(5)*YV + A(6)
      GVAL1 = ZV
      ZV=B(1)*XV**2  + B(2)*YV**2 + B(3)*XV*YV + B(4)*XV+B(5)*YV + B(6)
      GVAL2 = ZV
      HVAL=HST
      PVAL=PST
7003  CONTINUE
      CALL BUG(HOLD)
      IF(HOLD)  9950,9950,9951
9951  CONTINUE
      WRITE OUTPUT TAPE 6,210, GVAL1,GVAL2
210   FORMAT (/6HGVAL1=  ,  E12.4,  6HGVAL2=  ,E12.4)
9950  CONTINUE
      RETURN
      END



      SUBROUTINE  PGETAL(GVAL1,GVAL2)
      CALL VALUT(ZGOT)
      GVAL1=ZGOT
      CALL VALU2(ZGOT)
      GVAL2 = ZGOT
      RETURN
```

```
      END


      SUBROUTINE  EXGETL(GVAL1,GVAL2)
C  GETS GVAL1 GVAL2  FOR EXACT CAE
      CALL VALUT(ZGOT)
      GVAL1=ZGOT
      CALL VALU2(ZGOT)
      GVAL2 = ZGOT
      RETURN
      END
```

```
      SUBROUTINE STRATE(G)
      DIMENSION G(6,6)
      G(1,1)=-1.
      G(1,3)= .5
      G(1,5)=  .5
      G(2,1)=   -1.
      G(2,2)=  .5
      G(2,6)=  .5
      G(3,1)=  1.
      G(3,2)=   -1.
      G(3,3)=   -1.
      G(3,4)=   1.
      G(4,3)=  .5
      G(4,5)=   -.5
      G(5,2)=   .5
      G(5,6)=  -.5
      G(6,1)=      1.
      RETURN
      END
```

```
      SUBROUTINE PERM(Z,N1,N2,N3,N4,N5,N6)
      DIMENSION Z(6)
      DIMENSION Y(6)
      Y(1)=Z(N1)
      Y(2)=Z(N2)
      Y(3)=Z(N3)
      Y(4)=Z(N4)
      Y(5)=Z(N5)
      Y(6)=Z(N6)
      DO 1 I=1,6
      Z(I)=Y(I)
1     CONTINUE
      RETURN
      END
```

```
      SUBROUTINE KUSS(  PVAL,HVAL,XX,YY,FINCR,KISS,JISS)
      DIMENSION  XX(10), YY(10)
      RFNCR=1.0/FINCR
      IPVAL=PVAL*RFNCR
      FIPVAL=IPVAL
      FRP=PVAL-FIPVAL*FINCR
      IHVAL=HVAL*RFNCR
      FIHVAL=IHVAL
C
C           (K,J.=  (0,0)
C    (0,1)        ((1,0)
C         (1,1)
      FRH=HVAL-FIHVAL*FINCR
      KISS=0
      JISS=0
      IF(.5*FINCR  -  FRP)  95,95,96
 95   KISS=1
  96  CONTINUE
      IF(.5*FINCR - FRH)  97,97,98
 97   JISS=1
  98  CONTINUE
      IF(KISS)  101,    101,102
 101  IF(JISS)  201,     201,202
 102  IF(JISS)  301,    301,302
C  (0,0)
C
C      3   4
C  6    1   2
C      5
 201  CONTINUE
      LH=IHVAL-1
      KH=IHVAL
      LP=IPVAL
      KP=IPVAL-1
      GO TO 400
C  (0,1)
C
C      6
C  5    3   4
C      1   2
 202  CONTINUE
```

```
      LH=IHVAL+1
      MH=IHVAL+2
      LP=IPVAL-1
      MP=IPVAL
      GO TO 400
C  (1,0)
C
C  3    4
C  1    2    5
C       6
 301  CONTINUE
      LH=IHVAL
      MH=IHVAL-1
      LP=IPVAL+2
      MP=IPVAL+1
      GO TO 400
C  (1,1)
 302  CONTINUE
C
C       5
C  3    4    6
C  1    2
C
      LH=IHVAL+2
      MH=IHVAL+1
      LP=IPVAL+1
      MP=IPVAL+2
      GO TO 400
 400  CONTINUE
      XX(1)=IPVAL
      YY(1)=IHVAL
      XX(2)=IPVAL+1
      YY(2)=IHVAL
      XX(3)=IPVAL
      YY(3)=IHVAL+1
      XX(4)=IPVAL+1
      YY(4)=IHVAL+1
      XX(5)=LP
      YY(5)=LH
      XX(6)=MP
      YY(6)=MH
```

```
      DO 999 I=1,6
      YY(I)=YY(I)*FINCR
999   XX(I)=XX(I)*FINCR
      RETURN
      END
```

```
      SUBROUTINE SEARCH

      COMMON RA,NI,GA,NG,H,XN,P,ALPHA,IPRST
      DIMENSION HF(4),PF(4),VF(4)
      COMMON  FINCR
      COMMON  S,FFF  ,CST,  NQ1,NQ2,FNQ1,FNQ2,GFAC,PLIM,DEL,CD2,NH,PO,
     XHO,VO,VMAX, GFLAG,GFLAG2
      COMMON PVAL,HVAL,IPVAL,IHVAL,ZZ,IGNO,IPHLD,IHLD,LIMIT
      COMMON IPLTH
      DIMENSION IPLTH(151)
      COMMON IP
      DIMENSION  IP(10,151)
      COMMON NUTS
      DIMENSION NUTS(151)
      COMMON YY
      COMMON IHBLC, IARG
      COMMON IGOES,KGOES
      DIMENSION IGOES(151),KGOES(151)
      COMMON ITGOES
      COMMON  POGTAB,HOGTAB,NOG,ISTYMI
      DIMENSION POGTAB(10),HOGTAB(10)
      COMMON TAB
      DIMENSION TAB(3,1000)
C
      HOLD =  1.0/FINCR
      IPVAL = PVAL*HOLD
      IHVAL= HVAL*HOLD
      IPHLD = IPVAL
      IHLD = IHVAL
 3    CONTINUE
      IGOB = IGOES(IPVAL)
      KGOB = KGOES(IPVAL)
C
      DO 9 I=1,10
      IF(I-1)  7077,7077,7080
 7077 CONTINUE
      LIMIT = IPLTH(IPHLD)
      IF(LIMIT)  1056,1056,1057
 1056 CONTINUE
      WRITE OUTPUT TAPE 6, 94
 94   FORMAT(1H ,20HLIMIT IS 0                                  )
```

```
      GO TO 9
C
 1057 CONTINUE
      GO TO 7090
 7080 CONTINUE
      LIMIT=10
C     I=2 OR MORE
 7090 CONTINUE
      IF ( I - IGOB)  407,408,9
 408  CONTINUE
      LIMIT = KGOB
      IF(KGOB) 9,9,407
 407  CONTINUE
C
      IHBLC=  IP(I,IPVAL)
      IF(IHBLC)  1098,1098,1198
 1198 CONTINUE
C
      DO 10 JJ = 1,LIMIT
      IARG = IHBLC + JJ
C  IHBLC IS ACTUALLY 1 BEFORE TABLE
      IENT = TAB(1,IARG) + .001
C  THE .001 PROVIDES FOR CORRECT FL TO FIXED PT CONVERSION
 1049 CONTINUE
      IF(IENT-IHLD)  1050,1080,1050
 1050 CONTINUE
 10   CONTINUE
C
 9    CONTINUE
C
C         HAVE EXHAUSTED RECORD
 1097 CONTINUE
 1098 CONTINUE
 1066 CONTINUE
C
      ZZ=0.
      YY=0.
      PST=P
      HST=H
      P=PVAL
      H=HVAL
```

```
      CALL VALUT(ZGOT)
      ZZ=ZGOT
      CALL VALU2(ZGOT)
      YY=ZGOT
 7073 CONTINUE
      P=PST
      H=HST
C
      CALL STORE
C
      GO TO 2001
 1080 CONTINUE
      ZZ = TAB(2,IARG)
      YY = TAB(3,IARG)
C  HAVE OBTAINED REQUIRED TAB ENTRIES
 2001 CONTINUE
      RETURN
      END
```

```
      SUBROUTINE STORE

      COMMON RA,NI,GA,NG,H,XN,P,ALPHA,IPRST
      DIMENSION HF(4),PF(4),VF(4)
      COMMON  FINCR
      COMMON  S,FFF  ,CST,  NQ1,NQ2,FNQ1,FNQ2,GFAC,PLIM,DEL,DD2,NH,PO,
     XHO,VO,VMAX, GFLAG,GFLAG2
      COMMON PVAL,HVAL,IPVAL,IHVAL,ZZ,IGNO,IPHLD,IHLD,LIMIT
      COMMON IPLTH
      DIMENSION IPLTH(151)
      COMMON IP
      DIMENSION  IP(10,151)
      COMMON NUTS
      DIMENSION NUTS(151)
      COMMON YY
      COMMON IHBLC, IARG
      COMMON IGOES,KGOES
      DIMENSION IGOES(151),KGOES(151)
      COMMON ITGOES
      COMMON  POGTAB,HOGTAB,NOG,ISTYMI
      DIMENSION POGTAB(10),HOGTAB(10)
      COMMON TAB
      DIMENSION TAB(3,1000)

C
      ZHLD=ZZ
      YHLD=YY
      J=IPVAL
      IF (  IGOES(J)  -  1 )  95,95,96
   95 CONTINUE
      IGOES(J)  =  1
      GO TO 3
   96 CONTINUE
      KGOES(J)=KGOES(J)+1
      IF(KGOES(J)-10)  2,2,3
 3    CONTINUE
C  START NEW 10 SPOT
      KGOES(J)=1
C  UP 10 SPOT NO.
      IGOES(J)=IGOES(J)+1
      ITGOES = ITGOES +10
```

```
      I = IGOES ( J )
      IF(I-10)  4044,4044,4045
 4045 CONTINUE
C     ECHELONS EXHAUSTED - SOMETHING VERY WRONG
      WRITE OUTPUT TAPE 6,123
 123  FORMAT(1H ,20H CH EXHAUSTED                    )
      GO TO 9999
 4044 CONTINUE
      IP(I,IPVAL) =  ITGOES
 2    CONTINUE
      I=IGOES(J)
      IHBLC = IP(I,IPVAL)
      IARG =  IHBLC + KGOES(J)
      TAB( 1, IARG)  =  IHVAL
      TAB( 2, IARG)  =  ZHLD
      TAB( 3, IARG)  =  YHLD
      CALL WRITIT(
     X                IHVAL,ZHLD,YHLD, IPVAL)
 9999 CONTINUE
      RETURN
      END
```

```
C       VALUT(ZGOT)
        SUBROUTINE VALUT(ZGOT)
        COMMON RA,NI,GA,NG,H,XN,P,ALPHA,IPRST
        A1=ALPHA-1.
        B=(2.0*P-1.0)*H
        AC1=2.0*P*A1
        C1=A1
        NG=0
        ZGOT=G(B,AC1,C1)
        RETURN
        END


        SUBROUTINE  VALU2(ZGOT)
        COMMON RA,NI,GA,NG,H,XN,P,ALPHA,IPRST
        A1=ALPHA-1.
        B=(2.0*P-1.0)*H
        AC2=P*A1
        C2=(1.0-P)*A1
        NG=0
        ZGOT=G(B,AC2,C2)
        RETURN
        END
```

```
      FUNCTION G(B,AC,C)
      COMMON RA,NI,GA,NG,H,XN,P,ALPHA,IPRST
      FABCF(X) = X **   AC     / ((X + B) ** C * EXPF(X))
      NI = 0
      DELTAX = .001
      NG = 0
      G = 0.0
      G1 = 0.0
      IF(ALPHA - 1.0)2,3,8
3     GF = 1.0
      GO TO 8
2     X = .0001
      F1 = FABCF(X)
      GA = X * F1
6     G1 = G1 + GA
      X = X / 2.0
      F2 = FABCF(X)
      GA = 1.5 * X * (F2 - F1)
      F1 = F2
      NG = NG + 1
      IF(NG - 100)7,7,5
7     IF(GA - 1.0E-8)5,5,6
5     XL = 1.0001
      X = .0001
      GO TO 9
8     X = 0.0
      XL = 1.0
      GF = 0.0
9      GR = FABCF(XL)
      G = G + GF - GR
      NT = XINTF(1.0 / DELTAX)
      X = X + DELTAX
      DO 10 I = 1,NT,2
      YX = FABCF(X)
      XH = X + DELTAX
      YXH = FABCF(XH)
      G = G + 4.0 * YX + 2.0 * YXH
10    X = X + 2.0 * DELTAX
      RA = DELTAX * (GR + YXH) / 2.0
      IF(RA - 1.0E-8)30,30,15
15    NI = NI + 1
```

```
      IF(NI - 2)20,16,18
18    IF(NI - 8)20,17,19
19    IF(NI - 20) 20,20,30
16    G2 = G * DELTAX / 3.0
      G = 0.0
      DELTAX = .01
      GO TO 20
17    G3 = G * DELTAX / 3.0
      G = 0.0
      DELTAX = .1
20    X = XL
      XL = XL + 1.0
      GF = GR
      GO TO 9
30    G = G * DELTAX / 3.0 + G1 + G2 + G3
      RETURN
      END
```

```
      FUNCTION GAMMA(A)
      PI = 3.14159265
      B1= 0.83333333E-1
      B2= -0.27777778E-2
      B3= 0.79365079E-3
      B4= -0.59523810E-3
      X = A
      IF(A - 2.0)22,30,30
22    X = X + 1.0
      IF(A - 1.0)25,30,30
25    X = X + 1.0
   30 Y= 0.5*LOGF(2.0*PI)+(X-0.5)*LOGF(X)-X
      SK= B1/X+B2/(X**3)+B3/(X**5)+B4/(X**7)
      Y= Y+SK
      GAMMA= EXPF(Y)
      IF(A - 2.0)42,50,50
42    IF(A - 1.0)44,46,46
44    GAMMA = GAMMA / (A * (A + 1.0))
      GO TO 50
46    GAMMA = GAMMA / A
50    RETURN
      END
```

```
      SUBROUTINE PFUDG
      COMMON RA,NI,GA,NG,H,XN,P,ALPHA,IPRST
      DIMENSION HF(4),PF(4),VF(4)
      COMMON  FINCR
      COMMON  S,FFF  ,CST,  NQ1,NQ2,FNQ1,FNQ2,GFAC,PLIM,DEL,DD2,NH,PO,
     XHC,VO,VMAX, GFLAG,GFLAG2
      COMMON PVAL,HVAL,IPVAL,IHVAL,ZZ,IGNO,IPHLD,IHLD,LIMIT
      COMMON IPLTH
      DIMENSION IPLTH(151)
      COMMON IP
      DIMENSION  IP(10,151)
      COMMON NUTS
      DIMENSION NUTS(151)
      COMMON YY
      COMMON IHBLC, IARG
      COMMON IGOES,KGOES
      DIMENSION IGOES(151),KGOES(151)
      COMMON ITGOES
      COMMON  POGTAB,HOGTAB,NOG,ISTYMI
      DIMENSION POGTAB(10),HOGTAB(10)
      COMMON TAB
      DIMENSION TAB(3,1000)
      CALL BUG(HOLD)
      DTAIL=HOLD
      DEL= 0.6 * S
      DD2 = DEL/ 2.0
      VAR = DD2
      STRTX = H
      FRACT = CST
      MAXIT  =  NQ2
      CALL LARMAX(
     X STRTX,  FNWVAL,  FRACT,  VAR,  MAXIT,  FMBIT,  FMVAL,
     X  DELX,  TRYX,  TRYVAR,  DTAIL)
      VL = FMVAL
      VMAX = FMVAL
      V = FMVAL
      NQ1=1
      NQ2=1
      WRITE OUTPUT TAPE 6,100, FNWVAL
100   FORMAT(1H ,E12.6)
```

```
RETURN
END
```

```
      SUBROUTINE LARMAX(
     1STRTX,FNWVAL,FRACT,VAR,MAXIT,FMBIT,FMVAL,
     2DELX,TRYX,TRYVAR,
     3DTAIL)
C     STRTX-FL PT INITIAL VALUE FOR X
C     SRCH-CALL THIS TO GET FNWVAL
C     FNWVAL-VALUE OF FN AT X (STORE RESULT OF FNWVAL)
C     FRACT-STOP WHEN LAST 2 VALS FOR FNWAL
C           DIFFER (AS FRACTION OF LAST)
C           BY LESS THAN FRACT
C     MAXIT-MAX NO ITERATIONS
C     FMBIT-VAL OF X WHERE MAX OCCURS
C     FMVAL-VAL OF FUNCTION AT FMBIT
CINITIALISE
      ITNO=0
 5    CONTINUE
      IF(VAR)  6,7,6
    7 CONTINUE
      FMBIT=0.0
      FMVAL=-10.E30.0
      GO TO 4000
    6 CONTINUE
      IFLAG=0
      X1=STRTX-VAR
      X3=STRTX
      X5=STRTX+VAR
 15   CONTINUE
      CALL SRCH( X1, FNWVAL )
      F1=FNWVAL
      CALL SRCH( X3, FNWVAL )
      F3=FNWVAL
      CALL SRCH( X5, FNWVAL )
      F5=FNWVAL
 100  CONTINUE
      PREX3=X3
      PREVF=F3
C GOT X1,X3,X5
      X2=.5*(X1+X3)
      X4=.5*(X3+X5)
      CALL SRCH( X2, FNWVAL )
      F2=FNWVAL
```

```
      CALL SRCH( X4, FNWVAL )
      F4=FNWVAL
      FM=MAX1F(F1,F2,F3,F4,F5)
      IF(DTAIL-1.0)104,105,104
  105 PRINT 107,X1,X2,X3,X4,X5,
     1          F1,F2,F3,F4,F5
  107 FORMAT(/1H , 7X,2HX1,11X,2HX2,11X,2HX3,11X,2HX4,11X,2HX5
     1/7X,1P5E13.4
     2//7X,2HF1,11X,2HF2,11X,2HF3,11X,2HF4,11X,2HF5
     3/7X,1P5E13.4
     4)
  104 CONTINUE
  200 IF(F1-FM)201,500,201
  201 IF(F2-FM)202,501,202
  202 IF(F3-FM)203,502,203
  203 IF(F4-FM)204,503,204
  204 IF(F5-FM)205,504,205
  205 GO TO 504
  500 CONTINUE
      X5=X2
      FHOLD=X1
      X1=2.0*X1-X3
      X3=FHOLD
      GO TO 901
  501 X5=X3
      X3=X2
      GO TO 902
  502 X5=X4
      X1=X2
      GO TO 903
  503 X1=X3
      X3=X4
      GO TO 904
  504 CONTINUE
      GHOLD=X5
      X1=X4
      X5=2.0*X5-X3
      X3=GHOLD
      GO TO 905
  901 F5=F2
      F3=F1
```

```
      CALL SRCH( X1, FNWVAL )
      F1=FNWVAL
      GO TO 9050
902   F5=F3
      F3=F2
      GO TO 1899
903   F5=F4
      F1=F2
      GO TO 1899
904   F1=F3
      F3=F4
      GO TO 1899
905   F3=F5
      F1=F4
      CALL SRCH( X5, FNWVAL )
      F5=FNWVAL
      GO TO 9050
1899  CONTINUE
      IF(X5-X1-DELX) 1897,1897,1900
1897  GO TO 3000
9050  CONTINUE
1900  CONTINUE
      ITNO=ITNO+1
      IF(ITNO-MAXIT)1901,1901,1902
1902  GO TO 3000
1901  IF(X3-PREX3)1905,2101,1905
1905  HOLD=(F3-PREVF)
      FRACP=HOLD/F3
      IF(FRACP-FRACT)2100,2101,2101
2101  GO TO 100
2100  GO TO 3000
3000  CONTINUE
      IF(DTAIL-1.0)704,705,704
 705  PRINT 107  ,X1,X2,X3,X4,X5,
     1            F1,F2,F3,F4,F5
 704  CONTINUE
      FMBIT=X3
      FMVAL=F3
4000  CONTINUE
      RETURN
      END
```

```
      SUBROUTINE SRCH(X,FNWVAL)
      COMMON RA,NI,GA,NG,H,XN,P,ALPHA,IPRST
      DIMENSION HF(4),PF(4),VF(4)
      COMMON  FINCR
      COMMON  S,FFF  ,CST,  NQ1,NQ2,FNQ1,FNQ2,GFAC,PLIM,DEL,DD2,NH,PO,
     XHO,VO,VMAX, GFLAG,GFLAG2
      COMMON PVAL,HVAL,IPVAL,IHVAL,ZZ,IGNO,IPHLD,IHHLD,LIMIT
      COMMON IPLTH
      DIMENSION IPLTH(151)
      COMMON IP
      DIMENSION  IP(10,151)
      COMMON NUTS
      DIMENSION NUTS(151)
      COMMON YY
      COMMON IHBLC, IARG
      COMMON IGOES,KGOES
      DIMENSION IGOES(151),KGOES(151)
      COMMON ITGOES
      COMMON  POGTAB,HOGTAB,NOG,ISTYMI
      DIMENSION POGTAB(10),HOGTAB(10)
      COMMON TAB
      DIMENSION TAB(3,1000)
      HVAL = X
      IHVAL = X * 100.0
      H = X
      P = 1.0
      PVAL = 1.0
      IPVAL = 100
C    DUMMY IPVAL VALUE
      H = HVAL
      CALL VAR(V)
      FNWVAL = V
      RETURN
      END
```

```
      SUBROUTINE      PRIN1(ALPHA,XN)
      PRINT 1,
     XALPHA,XN
1     FORMAT(1H , 35HUSING DATA PACK FOR ALPHA=              ,F6.2,
     X12HSAMPLE SIZE    F7.2)
      RETURN
      END


      SUBROUTINE PRIN2(NH,NQ1)
      PRINT 1,
     XNH,NQ1
1     FORMAT(1H ,20HHAVE DONE STEP         ,I4,4H  OF,I4)
      RETURN
      END


      SUBROUTINE  OUTIT
      CALL SORTY1
      RETURN
      END


      SUBROUTINE OUTIT
C     DUMMY - USE WHEN TABLE INTERPOLATION FOR G WAS NOT USED
      RETURN
      END
```

```
      SUBROUTINE SORTY1

      COMMON RA,NI,GA,NG,H,XN,P,ALPHA,IPRST
      DIMENSION HF(4),PF(4),VF(4)
      COMMON  FINCR
      COMMON  S,FFF  ,CST,  NQ1,NQ2,FNQ1,FNQ2,GFAC,PLIM,DEL,DD2,NH,PO,
     XHO,VO,VMAX, GFLAG,GFLAG2
      COMMON PVAL,HVAL,IPVAL,IHVAL,ZZ,IGNO,IPHLD,IHLD,LIMIT
      COMMON IPLTH
      DIMENSION IPLTH(151)
      COMMON IP
      DIMENSION  IP(10,151)
      COMMON NUTS
      DIMENSION NUTS(151)
      COMMON YY
      COMMON IHBLC, IARG
      COMMON IGOES,KGOES
      DIMENSION IGOES(151),KGOES(151)
      COMMON ITGOES
      COMMON  POGTAB,HOGTAB,NOG,ISTYMI
      DIMENSION POGTAB(10),HOGTAB(10)
      COMMON TAB
      DIMENSION TAB(3,1000)


      DIMENSION NIHBLC(101)
      DIMENSION TABUVV(3,300)
C
C  CO NTAINS STARTING POINTS FOR 1ST ECHELON ENTRIES
C
      NIHOLD =0
      LNHOLD = 0
C
      DO 8 IPVAL = 1,150
C  SO RTS THROUGH COMPLETE  IPVAL LIST
C
      JIT =0
C
C  IN ITIALISES  TABUFF INDEX
      IGOB = IGOES(IPVAL)
      KGOB = KGOES(IPVAL)
```

```
      DO 9 I=1,10
      JHOLD =  JIT
C  NE W JHOLD VALUE
C  GO ES THRU ECHELONS
      IF (I-1)  7077,7077,7080
 7077 CONTINUE
      LIMIT =  IPLTH(IPVAL)
      IF(LIMIT)  9,9,7090
 7080 CONTINUE
      LIMIT = 10
      IF( I - IGOB)  407,408, 9
 408  CONTINUE
      LIMIT = KGOB
      IF(KGOB) 9,9,407
 407  CONTINUE
 7090 CONTINUE
C
      IHBLC  = IP(I,IPVAL)
      IF(IHBLC)  1098,1098,1198
 1098 CONTINUE
C  NO  SORTING REQUIRED FOR THIS IPVAL - IGNORE
      GO TO 8
 1198 CONTINUE
C
      DO 10 JJ=1,LIMIT
      IARG = IHBLC + JJ
      JIT = JHOLD + JJ
      DO 15 II=1,3
C GET  IN HVAL,GVAL1 AND GVAL2
      HOLD = TAB(II,IARG)
      TABUVV(II,JIT)  = HOLD
 15   CONTINUE
 10   CONTINUE
C
 9    CONTINUE
C
 999  CONTINUE
C  SO RTING
      LNHOLD  =  IPLTH(IPVAL)
C  LENGTH OF ORIGINALLY RAED IN DATA
      LNHLD = 0
```

```
      IF (   IGOES(IPVAL)  -   1)   7,7,88
   88 CONTINUE
      LNHLD  =   (IGOES(IPVAL) -2)* 10   +   KGOES(IPVAL)
 7    CONTINUE
C  KGOES ID NUMBER IN UNCOMPLETED ONE
      LNHOLD = LNHOLD + LNHLD
C  TOTAL OF NEW ENTRIES FOR THIS P VALUE
      NIHOLD = NIHOLD + LNHOLD
C  THIS VALUE IS USED, WHEN READ IN , AS IP(1,IPVAL)
C  NE W STARTING POINT
      CALL SORTZ(TABUVV,LNHOLD )
      CALL TAPOUT(TABUVV,LNHOLD,IPVAL)
 8    CONTINUE
      RETURN
      END
```

```
SUBROUTINE SORTZ(  TABUVV,  JHOLD)
DIMENSION AKEY(3)
DIMENSION TABUVV(3,300)
JQUANT  =  JHOLD
AKEY(1)=  1.0
AKEY(2)= 0.0
AKEY(3)=0.0
CALL SORTAC( TABUVV(1,1) , JQUANT,  3,  AKEY)
RETURN
END
```

```
      SUBROUTINE NOGIT

      COMMON RA,NI,GA,NG,H,XN,P,ALPHA,IPRST
      DIMENSION HF(4),PF(4),VF(4)
      COMMON  FINCR
      COMMON  S,FFF  ,CST,  NQ1,NQ2,FNQ1,FNQ2,GFAC,PLIM,DEL,DD2,NM,PO,
     XHO,VO,VMAX, GFLAG,GFLAG2
      COMMON PVAL,HVAL,IPVAL,IHVAL,ZZ,IGNO,IPHLD,IHLD,LIMIT
      COMMON IPLTH
      DIMENSION IPLTH(151)
      COMMON IP
      DIMENSION  IP(10,151)
      COMMON NUTS
      DIMENSION NUTS(151)
      COMMON YY
      COMMON IHBLC, IARG
      COMMON IGOES,KGOES
      DIMENSION IGOES(151),KGOES(151)
      COMMON ITGOES
      COMMON  POGTAB,HOGTAB,NOG,ISTYMI
      DIMENSION POGTAB(10),HOGTAB(10)
      COMMON TAB
      DIMENSION TAB(3,1000)


      DIMENSION IMAGE(900)
      PMAX =0.0
      HMAX = 0.0
      PMIN =100.
      HMIN = 100.
      DO 10 I = 1,10
      PMIN = MIN1F(POGTAB(I),PMIN)
      HMIN = MIN1F(HOGTAB(I),HMIN)
      PMAX = MAX1F(POGTAB(I),PMAX)
      HMAX = MAX1F(HOGTAB(I),HMAX)
10    CONTINUE
      IF(  PMAX - PMIN)  101,101,102
101   CONTINUE
      PMIN=0.0
      PMAX=100.0
102   CONTINUE
```

```
      IF(HMAX - HMIN)  201,201,202
201   CONTINUE
      HMIN=0.0
      HMAX=100.0
202   CONTINUE
      CALL PLOT2(IMAGE,PMAX,PMIN,HMAX,HMIN)
      DO 2 I=1,10
      P=POGTAB(I)
      H=HOGTAB(I)
      CALL PLOT3  (  1H*, P,H,1)
2     CONTINUE
      WRITE OUTPUT TAPE 6,100
100   FORMAT(1H1)
      CALL PLOT4( 6, 6HPLOT11)
      RETURN
      END
```

```
      SUBROUTINE TAPEIN
      COMMON RA,NI,GA,NG,H,XN,P,ALPHA,IPRST
      DIMENSION HF(4),PF(4),VF(4)
      COMMON  FINCR
      COMMON  S,FFF  ,CST,  NQ1,NQ2,FNQ1,FNQ2,GFAC,PLIM,DEL,DD2,NH,PO,
     XHO,VO,VMAX, GFLAG,GFLAG2
      COMMON PVAL,HVAL,IPVAL,IHVAL,ZZ,IGNO,IPHLD,IHLD,LIMIT
      COMMON IPLTH
      DIMENSION IPLTH(151)
      COMMON IP
      DIMENSION  IP(10,151)
      COMMON NUTS
      DIMENSION NUTS(151)
      COMMON YY
      COMMON IHBLC, IARG
      COMMON IGOES,KGOES
      DIMENSION IGOES(151),KGOES(151)
      COMMON ITGOES
      COMMON  POGTAB,HOGTAB,NOG,ISTYMI
      DIMENSION POGTAB(10),HOGTAB(10)
      COMMON TAB
      DIMENSION TAB(3,1000)
      DIMENSION  NIHBLC(101)
C  READS IN CARDS WHICH CONTAIN STORED TABLES IN THREES
C  LATER WILL RAED IN DATA TAPE
 335  CONTINUE
      JJ = 3
      JJNEXT = 3
C  INITIALISE AT 3 SO THAT 0 INDICATES BLANK
      IHOLDO=3
      IHOLDN=3
 2005 CONTINUE
 7    CONTINUE
      READ INPUT TAPE  5,  7900,  IPVAL
 7900 FORMAT(  I4 )
      WRITE OUTPUT TAPE 6,
     X406,
     XIPVAL
 406  FORMAT( ///// 1H , 6HIPVAL=    , I4)
      IF ( IPVAL - 999 )  306,306,307
C  TEST FOR END OF  INPUT PACKAGE
```

```
  306 CONTINUE
      IF ( IPVAL )  7,7,8
 8    IF ( IPVAL - 150)  9,9,7
 9    CONTINUE
      IP ( 1,  IPVAL )  =  JJ
 2006 CONTINUE
      READ INPUT TAPE 5,
     X7300,
     X  ITEMP, TAB2J, TAB3J,
     X  ITEMP2,  TAB2K,  TAB3K,
     X  ITEMP3,  TAB2L,  TAB3L
 7300 FORMAT(   X, 3 ( I3, F10.6,F10.6,X ))
      IF ( ITEMP - 998)  1306, 1307,1307
C  TEST FOR END OF THIS IPVAL SECTION
 1306 CONTINUE
      II = JJ + 1
      KK = JJ + 2
      LL = JJ + 3
      TAB ( 1, II ) = ITEMP
      TAB(2,II)  =  TAB2J
      TAB(3,II)  =  TAB3J
      TAB(1,KK) = ITEMP2
      TAB( 2,KK)  = TAB2K
      TAB( 3,KK)  = TAB3K
      TAB(1,LL)  =  ITEMP3
      TAB( 2,LL )  = TAB2L
      TAB( 3,LL) = TAB3L
      JJ =  JJ + 3
      ITGOES = JJ
      WRITE OUTPUT TAPE 6,
     X7025,
     X  ITEMP ,  TAB(2,II)  ,  TAB(3,II),
     X  ITEMP2, TAB(2,KK), TAB(3,KK),
     X  ITEMP3,  TAB(2,LL), TAB(3,LL)
 7025 FORMAT(  /1H , 3( I3,F14.6,F14.6,X) )
 95   CONTINUE
      GO TO 2006
 1307 CONTINUE
      IHOLDN  =  JJ
      IPLTH(IPVAL)  =  IHOLDN - IHOLDO
      WRITE OUTPUT TAPE 6,
```

```
     X405,
     XIPLTH(IPVAL)
405   FORMAT( 1H , 22HLENGTH OF RECORD =                    , I4     )
      IHOLDO  =  IHOLDN
      GO TO 2005
 307  CONTINUE
      RETURN
      END
```

```
      SUBROUTINE BUG(HOLD)
      PRODUCTION MODE
      HOLD = 0.0
      RETURN
      END


      SUBROUTINE BUG(HOLD)
C     PROVIDES DETAILED OUTPUT
      HOLD = 1.0
      RETURN
      END
```

BLANK PAGE

UNCLASSIFIED
Security Classification

DOCUMENT CONTROL DATA - R&D

(Security classification of title, body of abstract and indexing annotation must be entered when the overall report is classified)

1 ORIGINATING ACTIVITY (Corporate author) C-E-I-R, INC. 9171 Wilshire Boulevard Beverly Hills, California 90210	2a REPORT SECURITY CLASSIFICATION UNCLASSIFIED 2b GROUP

3 REPORT TITLE
ESTIMATION OF THE LOCATION PARAMETERS OF THE PEARSON TYPE III AND WEIBULL DISTRIBUTION IN THE NON-REGULAR CASE AND OTHER RESULTS IN NON-REGULAR ESTIMATION

4 DESCRIPTIVE NOTES (Type of report and inclusive dates)
Scientific. Interim.

5 AUTHOR(S) (Last name, first name, initial)
Blischke, W.R. Johns, M.V., Jr.
Truelove, A.J. Mundle, P.B.

6 REPORT DATE November 1966	7a TOTAL NO OF PAGES 123	7b NO OF REFS 12
8a CONTRACT OR GRANT NO AF 33(615)-3152 b PROJECT NO 7071 c 61445014 d 681304	9a ORIGINATOR'S REPORT NUMBER(S) 9b OTHER REPORT NO(S) (Any other numbers that may be assigned this report) ARL 66-0233	

10 AVAILABILITY/LIMITATION NOTICES
Distribution of this document is unlimited.

11 SUPPLEMENTARY NOTES	12 SPONSORING MILITARY ACTIVITY Aerospace Research Laboratories (ARM) Wright-Patterson Air Force Base, Ohio

13 ABSTRACT

The project is a continuation of research on problems in non-regular estimation reported in ARL Technical Documentary Report No. ARL 65-177(1965). Included in that report was a lower bound on the variance of unbiased estimators of the location parameter of the Pearson Type III distribution, applicable in the non-regular case. This report includes the results of a numerical investigation of that bound for varying values of the shape parameter of the Type III distribution and varying sample sizes. The bound is apparently of the correct order of magnitude in a certain region of the parameter space but sub-optimal elsewhere. Approximations to the Pitman estimators for location parameters are investigated for both the Pearson Type III and Weibull distributions. In both cases, the minimum observation apparently contains the major part of the information concerning the unknown location parameter. Some results on the non-regular estimation problem, particularly concerning the derivation of variance bounds, in the cases of densities with bounded domain depending on an unknown parameter and of mixtures of uniform distributions, are also discussed.

DD FORM 1 JAN 64 1473

UNCLASSIFIED
Security Classification

UNCLASSIFIED

Security Classification

14 KEY WORDS	LINK A ROLE	LINK A WT	LINK B ROLE	LINK B WT	LINK ROLE	LINK WT
Non-regular estimation, Pearson Type III distribution, Weibull distribution, Variance bounds, Pitman estimators						

INSTRUCTIONS

1. ORIGINATING ACTIVITY: Enter the name and address of the contractor, subcontractor, grantee, Department of Defense activity or other organization *(corporate author)* issuing the report.

2a. REPORT SECURITY CLASSIFICATION: Enter the overall security classification of the report. Indicate whether "Restricted Data" is included. Marking is to be in accordance with appropriate security regulations.

2b. GROUP: Automatic downgrading is specified in DoD Directive 5200.10 and Armed Forces Industrial Manual. Enter the group number. Also, when applicable, show that optional markings have been used for Group 3 and Group 4 as authorized.

3. REPORT TITLE: Enter the complete report title in all capital letters. Titles in all cases should be unclassified. If a meaningful title cannot be selected without classification, show title classification in all capitals in parenthesis immediately following the title.

4. DESCRIPTIVE NOTES: If appropriate, enter the type of report, e.g., interim, progress, summary, annual, or final. Give the inclusive dates when a specific reporting period is covered.

5. AUTHOR(S): Enter the name(s) of author(s) as shown on or in the report. Enter last name, first name, middle initial. If military, show rank and branch of service. The name of the principal author is an absolute minimum requirement.

6. REPORT DATE: Enter the date of the report as day, month, year, or month, year. If more than one date appears on the report, use date of publication.

7a. TOTAL NUMBER OF PAGES: The total page count should follow normal pagination procedures, i.e., enter the number of pages containing information.

7b. NUMBER OF REFERENCES: Enter the total number of references cited in the report.

8a. CONTRACT OR GRANT NUMBER: If appropriate, enter the applicable number of the contract or grant under which the report was written.

8b, 8c, & 8d. PROJECT NUMBER: Enter the appropriate military department identification, such as project number, subproject number, system numbers, task number, etc.

9a. ORIGINATOR'S REPORT NUMBER(S): Enter the official report number by which the document will be identified and controlled by the originating activity. This number must be unique to this report.

9b. OTHER REPORT NUMBER(S): If the report has been assigned any other report numbers *(either by the originator or by the sponsor)*, also enter this number(s).

10. AVAILABILITY/LIMITATION NOTICES: Enter any limitations on further dissemination of the report, other than those imposed by security classification, using standard statements such as:

(1) "Qualified requesters may obtain copies of this report from DDC."

(2) "Foreign announcement and dissemination of this report by DDC is not authorized."

(3) "U. S. Government agencies may obtain copies of this report directly from DDC. Other qualified DDC users shall request through _____."

(4) "U. S. military agencies may obtain copies of this report directly from DDC. Other qualified users shall request through _____."

(5) "All distribution of this report is controlled. Qualified DDC users shall request through _____."

If the report has been furnished to the Office of Technical Services, Department of Commerce, for sale to the public, indicate this fact and enter the price, if known.

11. SUPPLEMENTARY NOTES: Use for additional explanatory notes.

12. SPONSORING MILITARY ACTIVITY: Enter the name of the departmental project office or laboratory sponsoring *(paying for)* the research and development. Include address.

13. ABSTRACT: Enter an abstract giving a brief and factual summary of the document indicative of the report, even though it may also appear elsewhere in the body of the technical report. If additional space is required, a continuation sheet shall be attached.

It is highly desirable that the abstract of classified reports be unclassified. Each paragraph of the abstract shall end with an indication of the military security classification of the information in the paragraph, represented as *(TS)*, *(S)*, *(C)*, or *(U)*.

There is no limitation on the length of the abstract. However, the suggested length is from 150 to 225 words.

14. KEY WORDS: Key words are technically meaningful terms or short phrases that characterize a report and may be used as index entries for cataloging the report. Key words must be selected so that no security classification is required. Identifiers, such as equipment model designation, trade name, military project code name, geographic location, may be used as key words but will be followed by an indication of technical context. The assignment of links, rules, and weights is optional.

UNCLASSIFIED

Security Classification