HEADQUARTERS ARMY		TRANSLATION NO. J-1383	ID NO.
REQUESTER	CONTROL NO.	TRANSLATOR'S INITIALS	DATE COMPLETED 24 FEB 1967
LANGUAGE Russian	GEOGRAPHIC AREA (If different from place of publication) USSR		
ENGLISH TITLE OF TRANSLATION Technology and Armament, No. 11			PAGE NUMBERS TRANSLATED FROM ORIGINAL DOCUMENT All except pages 84-92
FOREIGN TITLE OF TRANSLATION Tekhnika i Vooruzheniye, 11			
AUTHOR(S) See individual articles	FOREIGN TITLE OF DOCUMENT (Complete only if different from title of translation)		
PUBLISHER "Krasnaya Zvezda" Publishing House		DATE AND PLACE OF PUBLICATION November 1966. Moscow, USSR	
COMMENTS Table of Contents begins on Page 121		122 Pages for reproduction	

AD651460

TT67-61755

TRANSLATION

The following definitions apply for the transliterated organizational entities included in the text:

chast' [voinskaya chast'] -- Administrative, line, and supply unit (yedinitsa) of the [branches] of troops, which has a number and banner, e.g., a regiment, separate battalion (batal'on, divizion) and troop organizations equal to them.

ob"yedinenive [operativnoye ob"yedineniye] -- Large-scale unification of various soyedinenive of the branches of troops, which is nonpermanent in composition and is intended to conduct operations in a war.

podrazdeleniye -- Troop unit of permanent organization and homogeneous composition in each branch of troops, which unit forms a larger podrazdeleniye or a chast'.

soyedinenive [soyedineniye voyskovoye] -- Combination (soyedinenive) of several chast' of one or various branches of troops into a permanent organization (division, brigade, or corps), headed by a command and a staff and including chast' and podrazdeleniye of auxiliary troops and services necessary for combat operations.

Source: Russian-English Dictionary of Operational, Tactical and General Military Terms, 1958.

DDC
MAY 10 1967
E

RC25 COMMERCE

OCC1 COPY(S)

7118-46 06557

WHITE SECTION
BUFF SECTION
AVAILABILITY CODES
SPECIAL

Tekhnika i Vooruzheniye, No. 11, 1966, pp 1-3

GLORY TO THE GREAT OCTOBER!

Forty-nine years ago a cannon shot from Avrora announced the birth of the first socialist government in the world and opened a new era in the history of humanity, an era which will see the downfall of capitalism and the affirmation of Communism. The workers' October Revolution, which took place under the leadership of the Party headed by V. I. Lenin, will have a decisive impact on the fate of the people of all countries and continents who have been summoned to fight for social and national freedom, for the triumph of democracy and socialism.

"We have the right to be proud and we are proud of the fact," wrote V. I. Lenin, "that it was our fate to initiate the construction of the Soviet government, to inaugurate a new epoch in the history of the world, an epoch of the reign of a new class, one which had been oppressed by all the capitalist countries, and one which is now moving onward towards a new life, to a victory over the bourgeoisie, to a dictatorship of the proletariat, to free humanity from the yoke of capitalism and finally toward elimination of imperialistic wars."

For us, the Soviet people, this celebration of the Great October has special significance. This is the first such celebration since the XXIIId Congress of the KPSS and will lead our country to the 50th anniversary of its glorious heroic history. We must take solemn note of this great revolutionary holiday. The Soviet people must survey the path which has been traveled under the leadership of the Leninist Party and experience a feeling of rightful pride in the achievement attained in all spheres of economic, social and spiritual life.

During the years of Soviet power our country has created a powerful productive force and has located and exploited the great natural resources of our country in order to build a strong economic base. The socialist national economy has grown uninterruptedly until at the present time it has many branches and covers all facets of production. The outstanding achievements of Soviet science have received wide recognition and occupy a leading role in the world's scientific and technical progress. It is quite natural that the country where socialism was first victorious should also be the first country to attempt to use nuclear power for peaceful purposes and was the first to initiate a program for mastery of the unlimited reaches of the universe.

The country of the Soviets, the country of Lenin, lives an intensive, full life. Everything that we have at our disposal, all that we have achieved is the result of the work of the hands, minds and energies of the Soviet people, the result of the ideological-political and organizational activity of the Communist Party. The correct Marxist-Leninist policies of the Party, the approval and support of those policies by all of the workers, has been the main source of strength for the victory of socialism in the past, and will form the basis for victories in the future. The strength of these policies lies in their scientific validity and realism, and in the fact that they permit a steady, confident movement of our society towards Communism.

Not much time has passed since the XXIIId Congress of the KPSS, which defined the program for further progress, but much has already been accomplished. In the past nine months the volume of production increased 8.3% as compared with the first three quarters of last year, and labor productivity increased 5%. There was widespread initiation of economic reforms which will have a favorable effect on the development of the national economy. Significant results were achieved in agriculture. By the first of November the farm laborers of the fifteen Union Republics had harvested approximately 75 million tons of grain for the government. This is the first time that this country has had such a large harvest.

Although the Soviet people are happy with their achievements they are still not satisfied. The best way to celebrate the Anniversary of the Great Revolution, as taught by V. I. Lenin, is to concentrate attention on unsolved tasks. The Party advises the workers to commemorate the 50th Anniversary of Soviet Power by initiating competition for new achievements in the building of Communism. This competition will become a movement of all nationalities and its rhythm will seize hundreds of production collectives. Throughout the country there will be an intensive search for production reserves, for new ways of increasing labor productivity, for lowering the cost of production and improving its quality.

When our country breached the frontlines of imperialism and started on the path to socialist reformation, V. I. Lenin stated that "...we will take on any task, irrespective of the difficulties or the obstacles, which will unite the millions and millions of workers in all of the countries." This Leninist foresight has come true. At the present time, not just one country, but a whole series of countries, are constructing a life of freedom under the banner of socialism. The creation of a socialist system has become an important factor in the development of world history. Socialism serves as a reliable platform for all nationalities in their fight for independence, freedom and social progress.

Certain of its international responsibilities, the Soviet Union continually strives to strengthen the friendship and unity of the nationalities of all of the Socialist Countries. As the bonds between these countries become stronger in all areas, we strive for unanimity and combined action in the interests of the world and of socialism. A clear example of this was the July conference in Bucharest of the Political Consultation Committee of the states parties to the Warsaw Pact. This conference adopted a resolution on Vietnam, and issued a declaration pertaining to the strengthening of peace in Europe, documents which have great political importance and long-range significance.

Meetings between Party and government delegations also help the development of friendship, solidarity and mutual support between brotherly socialist countries. Not too long ago there were meetings and discussions between the Party leaders and heads of governments of Bulgaria, Hungary, GDR, Cuba, Mongolia, Poland, Rumania, the Soviet Union and Czechoslovakia, which were held on Soviet soil. They were conducted in a cordial and open atmosphere. Our guests were made acquainted with Soviet achievements in science and technology, including newest models of armaments for the Ground Forces, for the Air Force and cosmic and military missile equipment.

The importance and necessity for increased solidarity between the socialist countries is emphasized by the course of events in Vietnam, where the United States is escalating its criminal war against the South Vietnamese patriots and is widening its aggression against North Vietnam. The Soviet Union, together with other socialist countries, has given many types of aid to the fighters in Vietnam and will continue to give this aid. However, this aid would be even more effective if it were not for the present position of the leaders of the Chinese Communist Party and the Chinese People's Republic, the only socialist country which immediately borders North Vietnam. Instead of trying to create a unified front against American aggression, the Chinese leaders slander those people who are in fact trying to support the Vietnamese people. Their disruptive activity contradicts the interests of the Socialist camp, violates Marxist-Leninist principles of proletarian internationalism, and encourages further aggression by the American imperialists.

The emancipation movement, started by the Great October, cannot be stopped, and continues to seize new countries. The balance of power in the world arena continues to change in favor of socialism. And the crisis in the capitalist world continues to worsen as the contradictions increase. This tends to increase adventurism by the imperialists, a process adding to the danger for all peoples and interferes with peace and social progress. In the past few years the threat of war has increased, the result of the aggressive activity by the imperialists, particularly the United States. Given these conditions, the Leninist Party feels that it has a patriotic, and international duty to strengthen the defensive might of the Soviet Union. Thanks to the Party's unwavering concern, weapons with tremendous force have been created, and these are a reliable guarantee of the safety of our country and of our allies.

The victory of the Soviet people in the Great Patriotic War is convincingly proof that there is no force in the world which can stop the forward progress of socialist society. And, if the imperialist aggressors lose their common sense and attack the Soviet Union and its friends, they will be decisively and soundly defeated in a very short period of time. This is the historical purpose and the noble mission of our valiant Armed Forces. For the personnel of the Armed Forces there is no higher duty than that of defending that which was won in the Great October, of protecting the creative labor of their own people and of peoples of the socialist countries.

Soviet troops are the flesh and blood of their people. They live with but one thought, to use all of their strength to the end that our Motherland will become even more powerful and beautiful, so that it will continue to move forward toward Communism. This is attested to by the active participation of the fighting men in the country-wide socialist competition which is being held to properly greet the 50th anniversary Jubilee of Soviet Power. The personnel of the Aviation Regiment commanded by Colonel A. VASILEVSKIY have shown commendable initiative by pledging to achieve new heights in improving their military skills.

The Communist party is very pleased with the first results of the Socialist competition, as so proudly announced by the armed defenders of the Motherland. There has been an increase in the number of otlichniks* of rated specialists, and of people who have mastered related specialities, and who

*Otlichnik - One who has obtained excellent results in combat

are thus capable of taking the place of their comrade in battle. There are considerably more leading podrazdeleniye, chast' and ships than there were last year. There are many more inventors and rationalizers, more skilled hands and curious minds, all of which continue to improve the training-material base.

The military skill of personnel has improved and the commanders and staffs are more competent commanders of the podrazdeleniye, chast' and ships which have been entrusted to them. They demonstrated their capabilities in many operational-tactical exercises conducted under conditions which correspond to the demands of modern warfare. This was clearly demonstrated in the "Vltava" exercise, conducted in September. The troops of four friendly armies, the People's Army of Czechoslovakia, the People's Army of Hungary, the People's Army of the GDR, and the Soviet Army, participated in this exercise. This exercise was a review of the unbreakable military union between the soldiers of the fraternal armies.

No matter how significant were the achievements attained in the past training year, we must not be satisfied, nor must we rest on our laurels. We must attempt to achieve even greater things and continually move forward and make the best possible use of our time. Military affairs undergo constant change as new equipment is replaced by something newer, and even more complicated. This places heavy demands on the commanders and political workers, on the engineers, technicians, and on all of the personnel in the Army and Navy who must continually try to improve their military skills and maintain high physical and moral standards.

SOVIET MILITARY PERSONNEL! SACREDLY GUARD AND ENHANCE THE HEROIC TRADITION OF THE SOVIET ARMY AND NAVY ACHIEVE NEW SUCCESSES IN MILITARY AND POLITICAL TRAINING STRENGTHEN MILITARY DISCIPLINE ALWAYS BE PREPARED TO DESTROY ANY AGGRESSOR!

In these flaming words of the October appeal of the Central Committee of the KPSS are formulated the basic tasks to which all the strength of Soviet military personnel must be subordinated. The best answer to this appeal has been, and will continue to be, new patriotic achievements in honor of the beloved Motherland. Our people will be able to work quietly to make reality of the plans for the creation of the Communist society drawn up by the Party. The defense of their inspired labor is in the strong reliable hands of Soviet fighting men.

Our Soviet motherland is approaching the 49th anniversary of the Great October Socialist Revolution in the heyday of its strength, with great achievements in the creation of a material-technical base for Communism. It owes its victories to the Communist Party, which has the goal of improving the welfare and happiness of the workers. The Soviet people can proudly look to the future and acclaim:

LONG LIVE THE GREAT AND UNBREAKABLE UNITY OF THE PARTY AND THE PEOPLE!

LONG LIVE THE GLORIOUS COMMUNIST PARTY OF THE SOVIET UNION CREATED BY LENIN!

Tekhnika i Vooruzheniye, No. 11, 1966, pp. 4-9

THE GOAL MUST BE REACHED

By Engineer-Lieutenant Colonel Ye. SIMAKOV

(Photographs by the author)

Military personnel in all branches and arms of the Armed Forces are participating in socialist competition in honor of the 50th year of Soviet power and are meeting the 49th Anniversary of the Great October with high marks in military and political training. The initiators of this competition, the personnel of the aviation regiment commanded by Colonel A. VASILYEVSKIY, have achieved new successes.

Our correspondent visited the initiators of this competition, got acquainted with the life and military training of the aviators and with the organization and methods used to maintain the equipment and which provide safe flying and successful fulfillment of the military-training missions.

What is the "secret" of the great achievements obtained by the personnel of the regiment commanded by Colonel A. VASILYEVSKIY? It was not hard to find the answer. It is the result of excellent organization of service and indoctrination work and in the outstanding organization of the work and, of course, the training of aviation specialists.

Training is conducted in a classroom at the airfield. Drills planned according to the missions which must be carried out during the year.

After determining the topics which must be studied, the flying and technical personnel are questioned and the information received from them is used in training. As a rule, the engineers, while making a complex inspection of an aircraft on maintenance day, test the knowledge of the aviators, navigators, technicians and aviation specialists among the flight crews, each according to his own specialty. If there are any gaps in their knowledge of theory and answers to practical questions, these must be filled by studying them during planned drills. Such topics as "Special flight conditions," "Autonomous servicing of an aircraft," and "Loading an Aircraft," must be repeated systematically.

Examinations are conducted in the Regiment twice a year, with technical flight conferences held just prior to the examinations. We would like to explain this in more detail.

The conferences are scheduled for the beginning of the winter or summer operations of an aircraft park. Personnel are split up into groups, and drills are held by sections. One of these conferences on the topic, "Features of operating aviation equipment in the fall-winter period," was held in October. Engineer-Major M. LEVENSHTAM presented an analysis of malfunctions and deficiencies in aviation equipment which can occur during the fall-winter period, and then discussed

the special features of operating aircraft and engines under winter conditions. Conference work then continued by sections. One of these sections was made up of aircraft commanders and their assistants, the aircraft technicians and the aviation equipment technicians. Navigators and radio technicians were in another section, and a third section consisted of members of flight crews who handled weapons and radio equipment.

The regiment had been holding these conferences for three years. Experience has shown us that this form of training is very successful in acquiring deep knowledge of the equipment. In addition to the seasonal ones, this year the conferences discussed such topics as "Operating an aircraft on a dirt field," and "A technological graph for preparing aircraft for flight for a training alert."

A two-year university to provide for technical efficiency has been organized in the Officers Club and has been a great help in raising the level of specialized knowledge among the officers. All the pilots and technicians in the regiment have completed this school (except those recently arrived). Drills are planned so that during the first year the students study higher mathematics, theoretical mechanics, physics, and other general educational disciplines, and during the second year, specialized topics such as aerodynamics, engines and automation. Lectures on general educational (on socialist principles) courses are given by teachers from local institutions of higher learning while the regimental engineers lecture on specialized topics. All topics are studied with relation to a specific type of aircraft. For example, during lectures on the topic "Runup and takeoff of an aircraft," conducted during the aerodynamics course, such questions as, from what kind of an airstrip, with what kind of a load and what is the best angle of takeoff, pertained to aircraft that are actually assigned to the regiment. During the course on thermodynamics the instructor directed the students attention to the thermal processes which take place when an engine is running, the reasons for engine surges, and measure to be taken to prevent them.

The university program includes practical drills. The pilots have for the first time learned how to independently, without technicians, prepare their aircraft for a recurrent takeoff (self-servicing), and for the first time discussed rational loading of an aircraft.

Drills at the field aerodrome must be mentioned when speaking of training. This is where aircraft construction and equipment and rules for conducting post-flight inspections are studied and where training pilots to independently ready their planes for next flights is done in order to prepare for rating examinations. Most of the work is done, of course, on maintenance day, when all the flying and technical personnel gather at the field.

An aircraft is reliable and flies without any malfunctions not only because it is properly designed and built, but also because TECH (technical maintenance unit) specialists have done a lot of work on it. They are the ones that make the adjustments, the careful checks of equipment, who determine if any parts are worn out ahead of time, and if necessary, who repair or replace the part, assembly, or unit so that it will function properly. Aircraft leaving the TECH are always ready to fly any combat mission for the entire period between scheduled maintenance checks.

Safety and the quality of the work done by the TECH are closely interwoven. It is very important, therefore, that adjustment operations be properly organized, and that the best technical methods for doing them be selected, so that the aircraft is not withdrawn from combat training flights for long periods of time, and so that all work done on the aircraft be of the highest quality. Engineer-Major I. SUVOROV, Chief of the TECH, believes the work is best done in two shifts. The specialists can then work around the aircraft and yet will not interfere with each other. Personnel are divided into two shifts; the first usually taking 60% of the specialists, the second, 40%. The first shift works during the daylight hours, and the specialists can do the work in areas where the second shift would need artificial light, which cannot always be provided. In other words, the first shift has more work areas.

The aircraft is rolled into the TECH area in the evening. The list of defects is turned in this same day. In the morning the Chief of the TECH, together with the chiefs of the adjustment acquaint themselves with the logs and with the defects noted during previous adjustment operations (they are logged in a journal kept by the TECH). Then they inspect the aircraft and make a final decision on the list of work to be done (authorized adjustments and supplemental ones). The technological schedule is issued later on.

These highly qualified personnel unquestionably ensure excellent quality adjustment work. Almost everyone in the TECH is a rated specialist (90%). Participating in the socialist competition, the men have in honor of the 50th October Anniversary, pledged that 60% of them will pass the examination for Specialist 1st Class, and that 38 men will do guaranteed work. This pledge has already been fulfilled. As of the 49th October Anniversary 41 men were authorized to affix guarantee stamps, and five groups had been designated as excellent.

For many years the group commanded by Captain Technical Service S. TARASOV has occupied first place in the TECH. Not long ago this officer completed work with a correspondence course institute and became an engineer. His high level of theoretical knowledge and rich practical experience have been a great help in indoctrinating his subordinates and organizing their training. This officer makes use of many types of training: group drills in classrooms, individual assignments, and technical critiques.

This group pays special attention to training new replacements. Captain Technical Service S. TARASOV first acquaints the young soldiers with the documents they must use during their work. Then he goes over individual theoretical questions to refresh their memories as to the functions of instruments and check equipment. When the novices carry out an assignment they have assigned to them an experienced mechanic who helps them master the technology involved in the assignment. The young specialists is not permitted to work on his own until he has been monitored two or three times.

There is a special plan for newly arrived technical officers which prepares them for independent duty. Along with the group chief, they agree on subjects which they must study and definite dates are set. They take the course credit test in about a month.

Not long ago specialists in the group reequipped a laboratory. The rationalizers made all-purpose stands which can be used to monitor all instruments, the oxygen equipment and the automatic pilots. Now, in order to check the automatic pilot, for example, all that is required is to set it in place on special brackets, connect the plugs, cut in the toggle switch, and the parameters will be measured. The check sets are mounted on the automatic pilot test stand. Supplies are led to them. The control panel, plug connectors, and parameter lists are on the front of the stand. The stand also has an electrical circuit strung near the work area. Similar stands have been built for checking fuel systems, flowmeters, and piloting and navigational instruments. Personnel are able to save approximately 15% of their time by using these stands. Work efficiency has increased significantly.

The group had pledged itself to develop four rationalizer suggestions and put them into operation in honor of the 40th October Anniversary. The aviators over-fulfilled their plan by submitting seven suggestions, the majority of which have already been put into operation. For example, an attachment which simplifies adjusting the flap indicators is in successful use. Now one man can perform this operation, instead of three. The instruments for checking directional gyros, the automatic pilot transmission ratios and the UGPK-52 dials, have been modernized.

The increase in the technical knowledge among the specialists in this group has resulted in almost all personnel having mastered related specialties, and some have even mastered two or three. Here are the names of some of the best: Extended-service Sergeants N. Savchenkov, V. Piskunov and A. Kryzhev, and Major Technical Service Reserve P. SHLANDAKOV who is a veteran of a Chast' of shockworkers of Communist Labor

Along with the regiment, Communist P. SHLANDAKOV has seen a lot of military action. He has served in the regiment as a junior aviation specialist, an aircraft technician, and as an Squadron Engineer. During the Great Patriotic War he made sure that hundreds of combat missions were flown.

Addressing the men, P. SHLANDAKOV, Captain Technical Service N. SHUMILIN and V. DUBROVSKIY, Navigator in an aviation squadron, and other veterans in the chast', willingly pass on their combat experience, tell them of the self-sacrifice and heroism of their comrades, and about their glorious military traditions.

The combat history of the regiment began 25 years ago, during the grim war years. The regiment completed its first fight on 7 October 1941. Eight fast SB bombers hit a concentrtion of tanks and mechanized chast' in the Yukhnov-Mosal'sk area. By 8 October they had already flown 20 sorties; 16 during the day and 4 at night. The aviators destroyed 15 tanks and 25 trucks loaded with infantry and cargo that first day. True to their oath, they spared neither strength nor their lives in the struggle to free the Motherland.

The exploit of the crew commanded by Senior Lieutenant S. GIGIN will live forever in our memories. As aircraft was returning to base after a successful bombing mission it was attacked by 4 enemy fighters. One of them managed to hit the

target, the fuel tank erupted and the flames spread quickly. The crew had time to bail out, but below them was the enemy. They quickly made the decision to ram the burning aircraft into an enemy column on the ground below them. Senior Lieutenant GIGIN and Corporal Kashnikov met a gallant death, repeating the deathless feat of Captain GASTELLO.

The aviators avenged the death of their comrades. During the night of 2 December 1941, they hit the airfield in the city of Klin so heavily that the enemy was ineffective for a considerable period of time. Not one of his aircraft took to the air that day. 35 Messerschmidtz and Junkers were destroyed during the raid.

Sparing no effort and wasting no time, the engineers, technicians and mechanics provided uninterrupted operation of weapons and equipment and, as always the Communists provided the examples of heroism, bravery and self-sacrifice. Everyone competed with them but none bested them.

The chast' flew almost 100 sorties during the battles for the capital in 1941. During the war it flew a total of 1110 sorties, dropped 6000 bombs on the enemy, destroyed 75 enemy tanks, burned 65 vehicles, destroyed 212 airplanes and 65 railroad cars and blew up 14 depots. This is far from being the entire list of military successes achieved by the aviators.

Much time has passed since those battles. But, when the regiment celebrated its jubilee in the summer of 1966, the veterans once again gathered together. They saw glorious regimental banner in good hands. The aviators in this leading chast' honor and multiply the glorious military traditions.

"There is no higher honor for us," they say, "than to carry forward the banner which won so much glory in battle to multiply the flory and grandeur of the mother socialist state."

GRAPHIC NOT REPRODUCIBLE

GRAPHIC NOT REPRODUCIBLE

On maintenance day every crew member checks his work area, instruments and navigation equipment. Pilot first class Captain V. POVEDAYKO, carefully inspects the equipment in the cockpit.

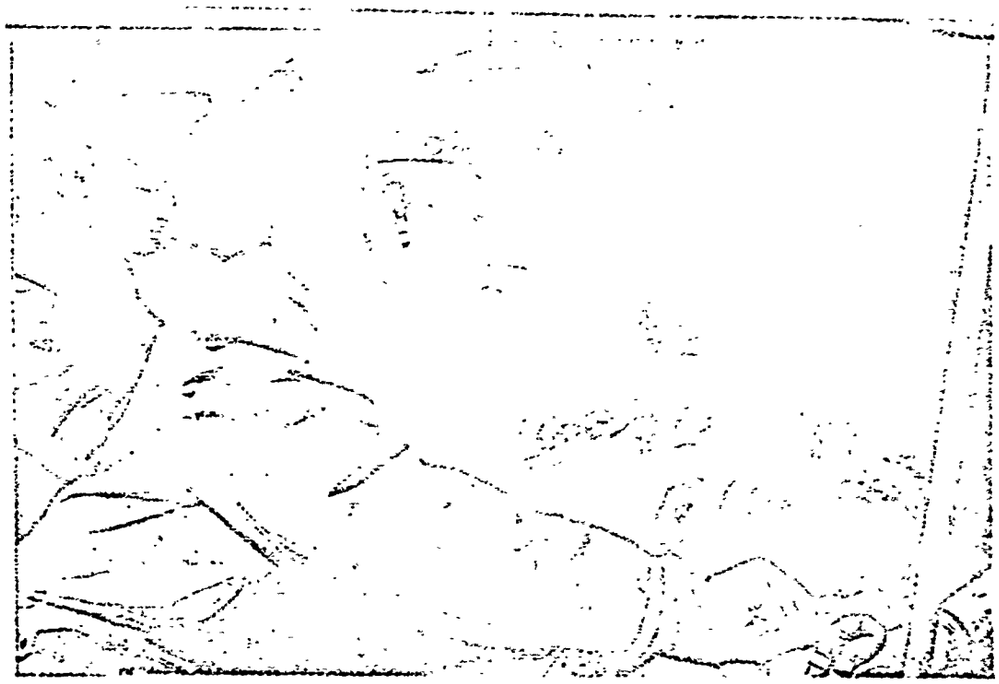

The officers periodically make a complete inspection of the aircraft in order to make a thorough and profound check of the status of the aviation equipment. This is one of the measures which provides for a high degree of reliability of equipment in flight. In the photograph: captains Technical Service V. TKACHEV on right and A. YELFIMOV Specialists 1st Class.

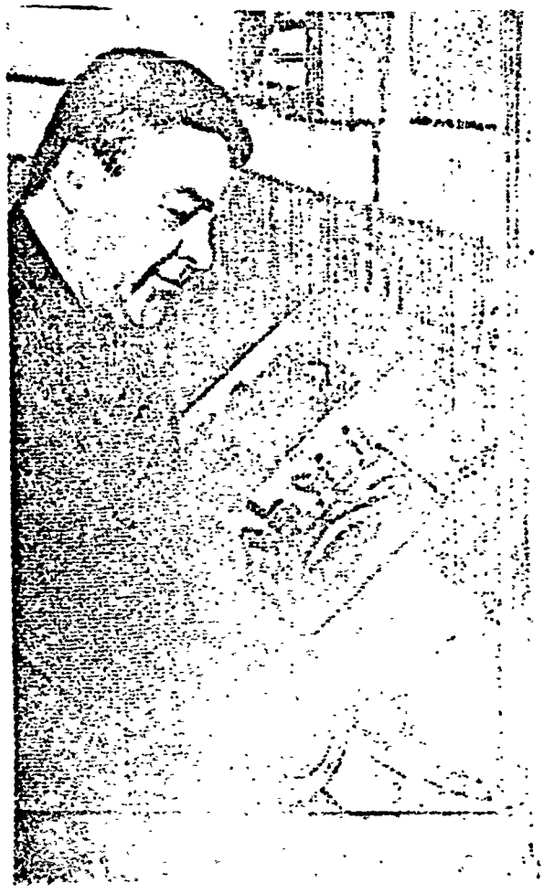

GRAPHIC NOT REPRODUCIBLE

A regimental veteran, Major Technical Service Reserve Pavel Anikeyevich SHLANDAKOV, works in the regiment even now. He passes on all of his skill and rich combat experience to the younger personnel.

In the photograph: shockworker of Communist Labor P. A. SHLANDAKOV prepares an installation for operation.

GRAPHIC NOT REPRODUCIBLE

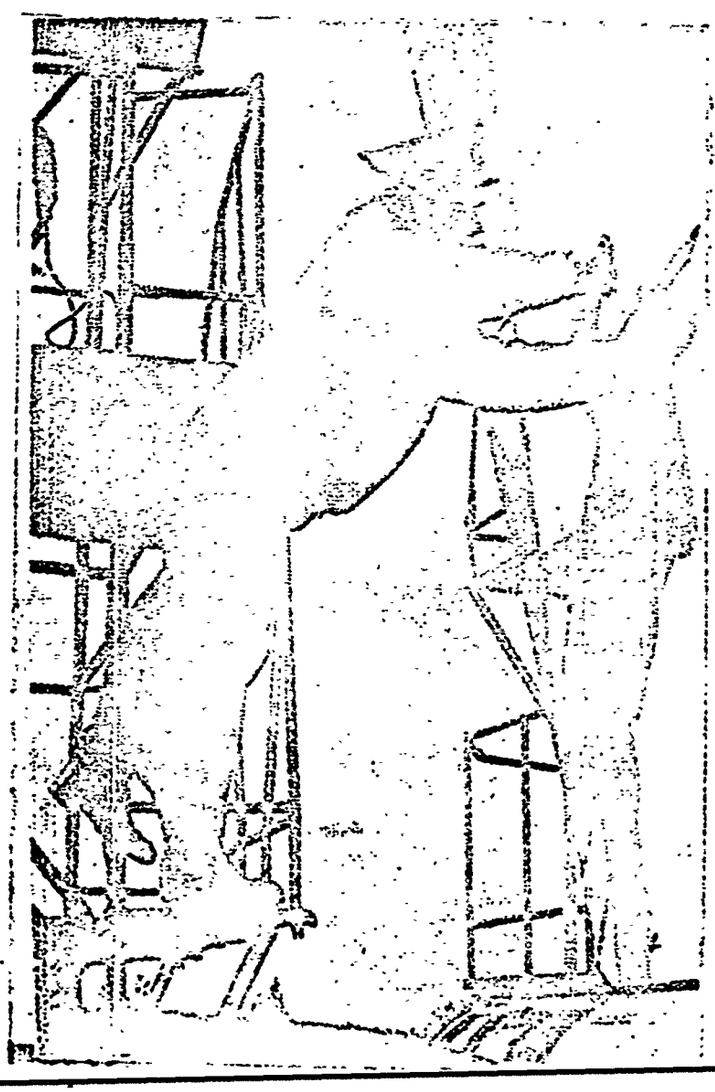

Aircraft inspected by Senior Aviation Mechanic, Sergeant on Extended-service G. Belikov need no additional checks. He has never failed to note a malfunction or defect. Not without reason is he considered to be a highly qualified technician. In the photograph: Specialist 1st Class G. Belikov checks rudder fastenings.

GRAPHIC NOT REPRODUCIBLE

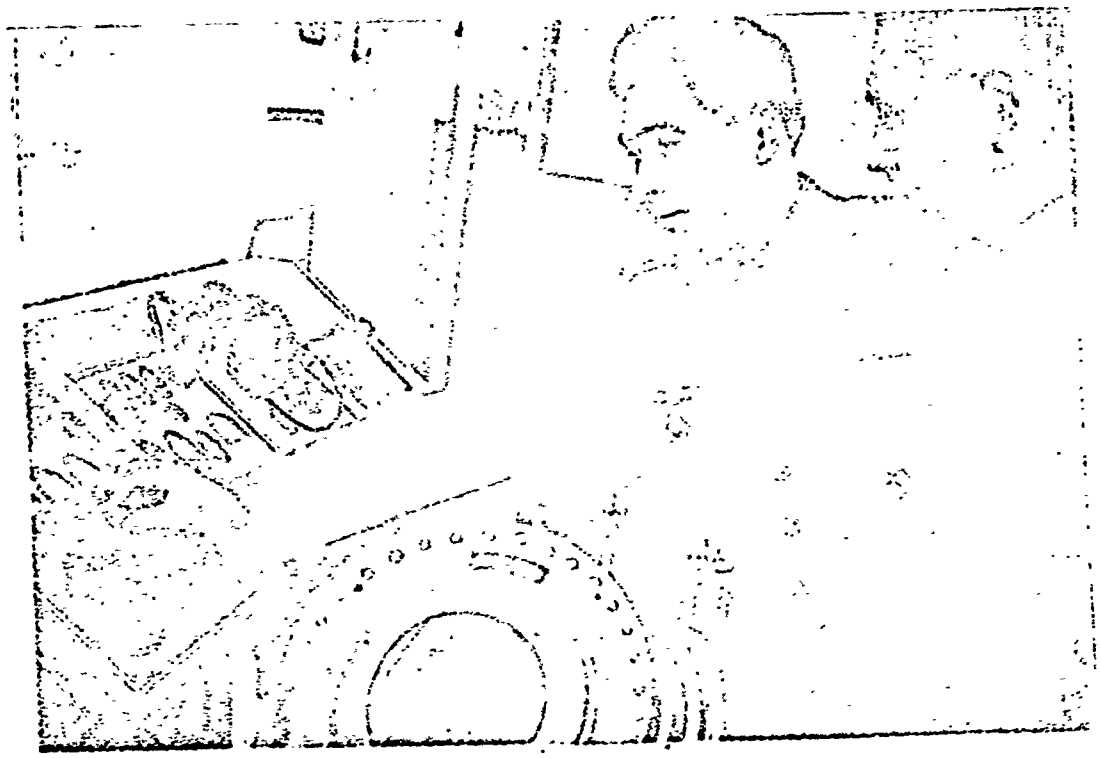

Captain of Technical Service S. TARASOV Chief of a TECH group, issues an individual assignment for the study of a definite topic to train aviation mechanics. Then he checks to see how the man's subordinates have coped with the assignment, and, if necessary, helps them. In photograph (left to right): Captain of Technical Service S. TARASOV tells Sergeant on Extended Service N. Savchenkov about operating characteristics at the stand used for checking automatic pilots.

Tekhnika i Vooruzheniye, No. 11, 1966, pp. 10-15

ARMS AND THE REVOLUTION

By Engineer Captain 2d Rank V. DEM'YANOV

The production achieved by the workers in the Sestroretsk arsenal (now the Instrument Works imeni S. P. Voskov) has an honored place among the revolutionary exploits performed by the Petersburg Proletariat during heroic 1917.

Boldly and decisively setting out on the path of revolutionary struggle, the workers converted the Sestroretsk Arsenal into a veritable Bolshevik stronghold, into a military arsenal of the Revolution. With weapons hand they have stormed forward to fight the bourgeois world and protect what was won during the Great October, the Civil War, and the Great Patriotic War.

During the most difficult days for our Party, the workers in the Sestroretsk Arsenal hid the leader of the revolution, V. I. Lenin from the pursuit of the Provisional Government, and for this act deserve special recognition from all of the Soviet people.

* * * *

"Arms - no matter what the cost! We will be able to win the fight for freedom and justice only by the use of force and the loss of much blood." wrote the Petersburg Committee of the RSDRP (Russian Social Democratic Labor Party) after the Tsarist Government, the tricks and intriques of the Kerenskiy Government and opposition from all manner of counter-revolutionaries. As V. I. Lenin stated, none of these obstacles were able to stop, or will be able to stop, the armed workers.

"Do the oppressed classes have arms?" And it was exactly this question, raised by Vladimir Il'ich which was "the main point" in the fall of 1917, when revolutionary activities in the country reached a high peak. Hunting shotguns and ships guns, revolvers and sabers, all were used to arm the people. But the most important. the weapon most widely used by the Petrograd Proletariat was the 7.62 mm rifle produced by the workers in the Sestroretsk arsenal.

The artisans of the Sestroretsk, which was located very close to the capital of Russia, had always felt the powerful revolutionary influence of the Petersburg proletariat and its vanguard, the representatives of the Leninist Party. On the eve of the revolution Bolshevik ideas and slogans were prevelant throughout the enterprise. Six thousand of its collectives rallied the Communists who numbered about 15% of all of the workers around them. Of the 15 members of the arsenal's committee, 10 were Bolsheviks. 34 of the others were sympathetic to our party and gravitated to it.

The workers elected as Chairman of the Arsenal Committee, a master gunstock joiner, Semen Petrovich Voskov, a working man and a revolutionary. The plant now bears his name. As a youth of fourteen he had already experienced the "justice" of autocracy when he was arrested for distributing revolutionary proclamations and thrown into jail in Poltava. He participated actively in the 1905 Revolution. He emigrated in order to save

himself from prosecution. In 1916, Semen Petrovich lead the largest strike of joiners ever held in the USA. He was well-known in Texas and Boston as a trade union activist. In New York, he founded and edited the newspaper Novyy Mir.

As soon as the news of the February Revolution reached America, he took the first steamship to his Motherland. He was immediately sent by the Party to the Sestroretsk Arsenal to work as a joiner.

The Arsenal Committee headed by S. P. Voskov was noted for its militancy. No administrative ban, no threat by Kerenskiy, who had, according to one of the records from the Sestroretsk Arsenal, began to stamp his feet, could stop the arms workers. They started to hide rifles in secret depots and they actively interfered in the affairs of the administration. Hundreds and even thousands of rifles, bayonets and bullets "leaked" from the works and fell into the reliable hands of the Petrograd workers. When V. I. Lenin summoned the Party and the people to armed rebellion, the Sestroretsk Arsenal became a genuine revolutionary arsenal.

The Sestroretsk workers, trusted Leninists, understood perfectly their tasks and their place in the Revolution. With their very own hands they created the arms necessary for winning freedom. As far as skill and production experience were concerned, these workers were by birth weapons makers and there was no problem in that area.

It was difficult to forge the arms. The summer and fall of 1917 were especially difficult. There was not enough steel, pig iron, and, especially, non-ferrous metals. There was a critical shortage of coal; in October the city received but 1½ million poods* of coal. The Navy Department and the Main Artillery Directorate alone required 5½ million poods or almost four times what actually arrived in the city. The arsenal got by on a very meager coal ration. Sabotage by the capitalists, criminal activity initiated by the bourgeois powers, and the lack of resources further increased the difficulties.

The bourgeois press gloated. They noisily tried to prove that labor productivity was decreasing because the workday had been shortened from eleven to eight hours and much time was given over to municipal affairs. However, this was not the problem. Energetic measures were required so that the Arsenal would be provided with necessary raw materials without which production would stop.

Measures were taken. Not by the bourgeois administration, but by the factory and works committees, which consisted of workers. The Sestroretsk zavkom (works committee) worked very hard and did a great deal. It was deeply involved, not only in the organization of production but in all technical questions. Members of the workers commissions kept a close watch over the equipment and managed to repair or replace worn lathes and eliminate technical problems. The Zavkom also hunted for the necessary raw materials: 58 poods of highspeed cutting steel were found in the Putilov Works and 20,000 poods of steel required for fuzes were located in the streetcar barn.

---

*TN: One pood equals 36 pounds.

S. P. Voskov went to the Donbass for coal; the Arsenal was threatened with a complete stoppage. The Chairman of the Zavkom carried out his mission in excellent fashion. After his trip the coal received by the arsenal increased to 13.7 thousand poods, a 14-fold increase.

The tremendous effort put forth by the arms-makers was crowned with full success. By 1916, the works was producing 450 rifles in one 11-hour working day and by 1917, the output had increased to 500-529 rifles in an 8-hour working day. This was how the conscientious, well-organized workers Party answered bourgeois sabotage and slander. The revolution needed arms, and they were being received in ever-increasing quantities.

In the meantime, the counter-revolutionaries, frightened by the workers' activities, prepared a coup. In August the traitors surrendered Riga to the German troops. Under the pretense of a military threat to the government a Cossack Division was dispatched to put down the Petrograd revolution. Kerenskiy placed the entire Petersburg Military District at the disposal of Kornilov. On the following day a secret order was prepared. Petersburg and Kronstadt were placed under martial law and drum-head courtmartials were again instituted. Their primary mission was to disarm the workers in the factories and plants. This was the plan for destroying the revolution.

The Bolshevik Party, in its address "to all working people, to all the workers and soldiers in Petrograd," called for them to resist the mutineers and helped organize the resistance. Large detachments of Red Guards were sent to fight Kornilov's forces. Within 24 hours workers detachments had reached a strength of approximately 100,000. However many of the plants only had a few dozen rifles. In the Neva region, 32 of 39 plants had no weapons at all. During those days of serious danger to the revolution, the momentous words of the Bolshevik Party influenced the workers in the military enterprises. Worker control over the Sestroretsk, Putilov, ammunition, and other works permitted the Bol'sheviks to provide arms and ammunition to the young Red Guards during the fight with Kornilov.

The Sestroretsk Zavkom acted decisively. It established guard posts and set up Bol'sheviks at the gates so that all of the depots and the issue of weapons were under their control.

The combined force of the revolutionary fighters--workers, soldiers and sailors--soundly defeated the counter-revolutionary forces. But the counter-revolutionists did not disappear; they muttered at secret meetings of the industrialists and made noises at meetings and gatherings of the bourgeois parties and sat in the government. The working class clung to its weapons. It gathered them up and prepared for the approaching battles. More and more of the Red Guardsmen from Vyborg, Vasil'yev Island, Narva, and other of the city's suburbs received large shipments of arms and ammunition from the Sestroretsk Arsenal. Some of the arms were kept in the Gulf of Finland aboard cutters and, until the beginning of the uprising, aboard Avrora which was moored to a dock at Galernyy Island. During the night of 19 and 20 October "in order to prevent further distribution of arms" a detachment of so-called disabled soldiers were ordered to take over the Sestroretsk Arsenal. This changed nothing. Arms still continued to be

distributed according to orders issued by the Zavkom. Just prior to the Revolution 700 rifles were transferred to the members of the Military-Revolutionary Committee. And finally, without any order of any kind, almost 1,000 rifles were issued on that historic night of 24 and 25 October.

Vladimir Il'ich, the leader of the Revolution, on 24 October, wrote to the Central Committee, "In no case should we leave power in the hands of Kerenskiy and Company until the 25th; we should decide the matter today, either this evening or during the night."

On that very day the arms-makers gathered on the premise of the summer theater for a meeting. A tall young man with glasses, who looked weary and pale, spike in an impassioned manner. This was V. Volodarskiy. He reported that the Sestroretsk Detachment of the Red Army had been entrusted with the job of guarding the revolutionary headquarters - Smol'nyy. The news was received with great enthusiasm. Within four hours after the meeting a large detachment numbering 800 persons, formed into echelon and moved out to Petersburg. By the middle of the evening the second Sestroretsk detachment arrived in Smol'nyy.

Upon orders issued by the Military-Revolutionary Committee, more and more detachments of Red Guards arrived from various other regions. Arms from Sestroretsk were also brought in and were issued to the Red Guards by an Arsenal worker, N. Yemel'yanov. The Revolution had begun.

Other detachments of arms-makers were given military missions by the Military-Revolutionary Committee. Hundreds of Red Guardsmen, headed by F. Gryadinskiy, successfully completed the operation of seizing thirteen of the Petersburg Printing houses. The Detachment commanded by A. Nikitin blockaded the cadets from the Engineer school and forced them to surrender. The weapons which had been stored in the school arsenal were quickly loaded on trucks and sent to Smol'nyy.

Block by block the city fell into the hands of the Revolution. Numerous detachments of Red Guards, sailors, and soldiers moved toward the Palace Square to help storm the last stronghold of the bourgeoisie. A large Sestroretsk detachment, armed with weapons they had produced themselves, also moved to the Winter Palace. The banners borne by the arms-makers had but one proud word "Revolution."

The Socialist Revolution was victorious. Along with other leading members of the proletariat the Sestroretsk arms-makers confidently fought for freedom and to protect what had been won by the Great October. They have fully justified the high evaluation by the Bol'sheviks who, even back in 1905, had written in their newspaper that the Sestroretsk workers stood in the van of the revolutionary proletariat because of their high level of cognition and organization.

The 7.62 mm rifle designed by S. I. Mosin has its place in the history of our country as the primary weapon of the victorious proletariat. It is not only famous for that. Its high reliability and excellent military qualities, due to its excellent construction and the outstanding quality of metal and craftsmanship, give this weapon an extraordinary long military service life.

The 7.62 mm Mosin rifle has undergone constant improvement. The arch sight on the Mosin rifle and automatic rifle was designed long before the Revolution by D. P. Konovalov who spent all of his adult life working in an arsenal. In 1916, the Arsenal was producing automatic rifles designed by the famous arms-maker V. G. Fedorov. Rhe outstanding designer F. V. Tokarev created six models of automatic arms at this Arsenal. Another master who worked at this Arsenal in 1910 was V. A. Degtyarev, a well known designer of infantry weapons. These weapons designers enriched our army with excellent models of military weapons which provided outstanding service during the years of he Great Patriotic War.

The engineers say, "show me your machine tools and I will tell you how you work." The master craftsmen in the Sestroretsk Arsenal worked well, with great precision. Their machine tools were also excellent but unfortunately were imported and foreign. We were forced to pay exhorbitant prices in pure gold for this equipment. This same situation exixted in other plants. This shortage of machine tools had a serious effect on the nations ability to speed up the development of its economy and build up a machine-building industry, to say nothing of freeing the country from dependence on foreign production and providing for defense of the country. The creation of a machine-tool industry was a definite problem.

Again the arms-workers, with their many years of production experience, came to the aid of their ountry. The Northern Arsenal became the first governmental tool works. The Sestroretsk workers initially started to produce drills and cutters, and then gages, calipers, and even micrometers. The production list steadily increased from year to year. By 1934, they were producing very accurate screw-cutting lathes and in 1937, they were instructed by the Academy of Science of the USSR to manufacturing a unique machine for integrating differential equations. The kinematic circuit of the machine was very complicated. They were forced to manufacture thousands of various types of shafts, bearings, gears, and other parts. Soviet science was not fortunate enough to have experienced tool and die makers. When he accepted the new machine, the leading shipbuilder and mathematician, Academician A. N. Krylov warmely congratulated the workers for the great value of the idea that they had brought into being.

Constantly improving production and mastering new models of tools and equipment for our industry and the personnel of the Sestroretsk Arsenal remembered the fine professional traditions established by their fathers.

In 1941, after the Great Patriotic war had already begun, the workers had to convert to arms production. There were no blueprints nor was technology sufficiently developed. Production had to be organized immediately. Models were designed and the parts given to the better gage-makers.

They very carefully made the first five items. But this time the tool-makers were unsuccessful; it appeared that the arms did not correspond to the specifications. Time and again they took the models and items apart and examined them. The parts made at the Sestroretsk Arsenal were better matched and machined than parts produced by mass production. This turned out to be the reason for the failures. When the clearances between the basic assemblies were increased the weapons started to work without malfunctioning. Fortunately, the weapons did not have to be completely precisely constructed.

Now it was necessary to move into series production. But the situation at the front began to worsen. The enemy had reached the Sestro River. The Arms-makers were forced to move to Leningrad, into a shop in one of the plants which had been evacuated. The gage-makers themselves had to install the lathes and presses. Sometimes, when there was no electricity, they had to turn the transmission belts by hand. In spite of all of the difficulties, the workers continued to provide the troops on the Leningrad Front with weapons. Each day hundreds of units were sent directly to the front.

By 1944, the war already had moved far to the west and the Government made the decision to again start the Sestroretsk Arsenal on peacetime production. The copiers once again became tool makers.

During the period of the post-war Five-year Plan the Arsenal gave the government a 76.5 million ruble profit, even though the price of tools was lowered twice to a figure below the original 25%. By 1955, the volume of production had increased 3.9 times as compared with the pre-war year 1940.

The Sestroretsk Arsenal was the first in our country to begin production of the so-called hard-alloy tool. Strips of hard alloy are affixed to the cutting edges of the tool in order to increase the productivity of lathe operators. Cutters of this design function much better than do ordinary cutters. However, only one edge of each strip is actually used in machining the metal. When the edge is worn, the tool, along with the expensive alloy, must be discarded.

Not long ago one of the workers in the Sestroretsk Arsenal developed a new cutter design. His original method of affixing the strips allows them to be rotated with wear so five edges of each strip, rather than one, are used. Thanks to this ingenious method, the tool-workers have achieved more economic and effective use of hard alloys. An entire shop is now producing tools with hard-alloy changeable strips.

The plant is producing millions of drills with hard-alloy tips, great numbers of taps and dies of various sizes and various wood-working tools. But one cannot stand still in the tool business. Technical progress in metal-working depends first of all on the lathe, on the tools. The country needs effective, long-lasting, and cheap tools. It would be very beneficial if we could master the plastic deformation system of manufacturing drills. This method would cut expenditures for expensive metals to the very minimum.

Thus, the toolmakers continually search for better methods. They are expanding production areas, increasing power, continually improving labor organization and production efficiency, incorporating technical esthetics, and mastering modern methods of planning and leadership.

The inheritors of the revolutionary, military, and labor traditions of the Sestroretsk dynasty will greet the jubilee of Soviet power with great labor successes.

GRAPHIC NOT REPRODUCIBLE

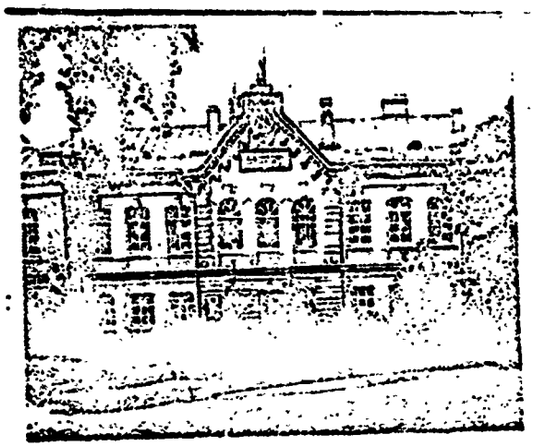

Almost 250 years ago the first 47 master craftsmen arrived at the Sestroretsk Arsenal. Strengthened by several generations of talented Russian master craftsmen, the northern arsenal for the country was formed here and was one of the centers of the Revolutionary movement of the Petersburg Proletariat. In the photograph: The administration building of the Sestroretsk Arsenal (now the Instrument Works imeni S. P. Voskov)

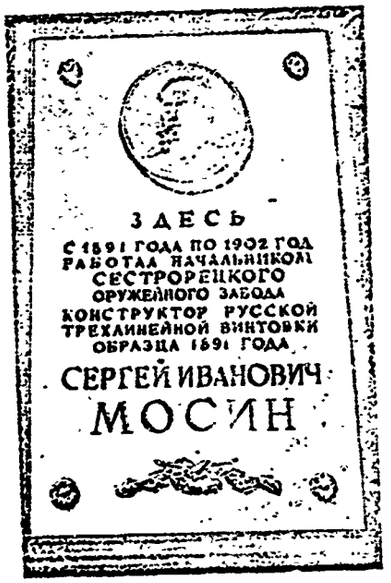

(plaque)

HERE
from 1891 to 1902
worked the Director
of the Sestroretsk
Arsenal
the designer of the Russian
7.62 mm rifle
1891 model

Sergey Ivanovich Mosin

A memorial plaque on the Works Administration Building

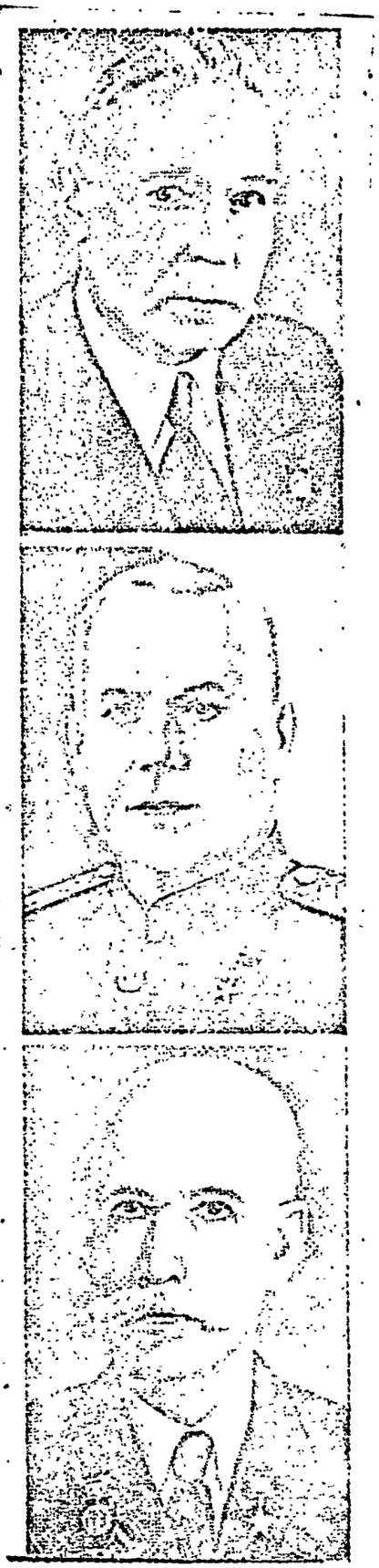

Their names are firmly inscribed in the history of military technology and in the history of the Sestroretsk Arsenal. These outstanding designers of infantry arms are (from top to bottom): Heros of Socialist Labor V. G. Fedorov, V. A. Degtyarev, and F. V. Tokarev.

GRAPHIC NOT REPRODUCIBLE

The renowned Bol'shevik-revolutionist, Semen Petrovich Voskov, the first Chairman of the Arsenal Committee.

Tekhnika i Vooruzheniye, No 11, 1966, pp. 16-23

SINGLE SIDE BAND RADIO COMMUNICATIONS

By Engineer Colonel V. YAGODIN

With ordinary (double side band) radio telephone communications, the transmitter radiates oscillations of the carrier frequency and two side bands of frequencies -- the upper and lower side bands, which are formed in the process of modulation. The radiated power is distributed unevenly among these oscillations: two thirds of the power is radiated at the carrier frequency, only one third being radiated at the side band frequencies. However, the message being transmitted is contained only in the side band oscillations. With single side band telephone communications, the transmitter radiates only one side band of frequencies, the second side band and the carrier frequency being suppressed. The suppressed frequencies are reinserted in the receiver.

Single side band radio communications has a number of advantages over double side band communications. All the transmitter power generated by the output stage tubes in the transmitter is used for the formation of oscillations in one side band.

The maximum current amplitude in the antenna, corresponding to the greatest value of modulated signal envelope, is twice the amplitude of the carrier frequency used in double side band transmission. As a result, the voltage of the signal received is doubled, which is equivalent to an increase in transmitter power by a factor of four.

The frequency band radiated by the transmitter is divided in half, the pass band of the receiver is correspondingly divided in half and the power of noise at receiver is thereby decreased.

The reduction of the pass band of the receiver produces an additional gain in the received signal power signal/noise ratio, by a factor of two. No disruptions of phase relations between oscillations of carrier and side band frequencies are present, due to the nature of radio wave propogation. This is equivalent to an additional power gain by a factor of two.

It is therefore generally stated that single side band transmission, depending on radio wave propogation conditions, gives a total power gain of 8-16 times.

Thus, an ordinary 1 kilowatt radio telephone transmitter transmitting the carrier frequency (at maximum loudness) develops a power of only 250 watts in each side band. The same effect at the receiver can be produced by using a single side band transmitter of only 0.25 kw.

Reducing the spectrum of radiated frequencies to one half, if the crowding of the radio spectrum (especially the short-wave spectrum) is kept in mind, is another factor of prime importance. The radiated frequency spectrum has practically the same width as the spectrum of the low frequency modulating signal; almost all the radiated power is concentrated into this band width.

Strong signal distortions in the receiver caused by a sharp decrease in carrier amplitude due to fading do not occur with single side band communications, since the carrier is reproduced directly in the receiver. The required transmitter power is reduced by approximately 25% due to the fact that no radiation

occurs during pauses in transmitted speech, and the required transmitter power is proportional to the loudness of the transmission.

The development of single side band radio communications has involved certain difficulties caused by the necessity of reinserting the carrier oscillations in the receiver with high accuracy, as well as the necessity of using filtering devices with high selectivity for supression of the carrier and unwanted side band. The considerable cost and complexity of equipment, difficulty of servicing, adjustment and repair and low operational reliability have limited its application. The achievements of the last ten to fifteen years in the area of frequency stabilization, design of high quality filters, radio circuit elements, vacuum tube and semi-conductor devices have allowed the manufacture of single side band radio communications apparatus of high operational stability, relatively compact size and low cost. Single side band equipment has become widely used in commercial and military short wave long range communications lines, both in stationary and mobile applications.

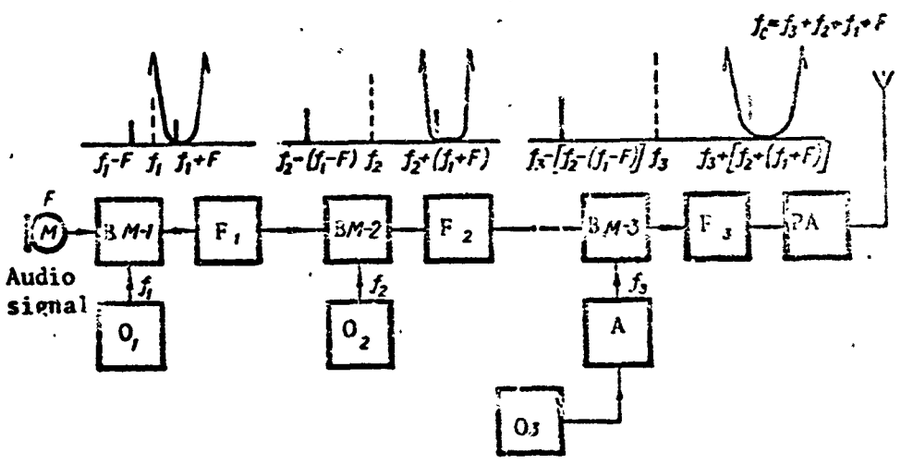

Figure 1. Block diagram explaining the production of a single side band using filters and balanced modulators: BM-1, BM-2, BM-3, balanced modulators; F_1, F_2, F_3, filters; O_1, O_2 carrier frequency oscillators; O_3, quartz driving oscillator; A, multiplier; PA, power amplifier.

The formation of the signal of one side band may be achieved by several methods. In essence, the problem can be reduced to transfer of the modulating low frequency signal to the RF frequency area. This is most often done in practice using filters and subsequent balanced moldulation. Although this requires considerable energy losses, high suppression of carrier and unwanted side band (up to 35-90 *db*) and stable operations are achieved.

Using these devices (Figure 1) the side frequency bands are separated and one is suppressed. The increase of separation between the side bands is necessary because they differ from each other very little. The low frequency signal containing the information modulates the carrier in the first balanced modulator and the carrier is suppressed; at the output of the modulator only the upper and lower side bands are present. One of these is filtered off by a highly selective band pass filter. The degree of suppression is determined by the frequency characteristic of the filter, which should have extremely sharp slope, so that the filter will separate side frequencies differing by 0.2% (in relation to the carrier). At the same time, the filter should pass

frequencies a few hundred cycles from the carrier without essential attenuation. These requirements are satisfied by wide band quartz or electromechanical filters designed for frequencies of 100-500 kHz. They attenuate the unwanted side band by 50-60 *db* and more.

With repeated balanced modulation, the side band frequencies are displaced into the radiated high frequency area. Depending on the value of the first carrier and the width of the operating frequency band in the transmitter, two or three stages of balanced modulation may be used. The single side band signal formed is amplified in the output stages of the transmitter to the required power and filtered using oscillating circuits.

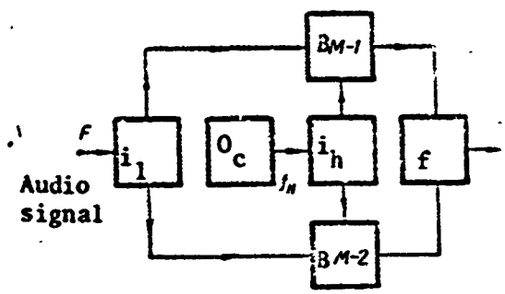

Figure 2. Block diagram demonstrating phase compensation method of producing single side band:
i_1, wide band low frequency phase shifter; i_h, high frequency phase shifter; BM-1, BM-2 balanced modulators; O_c, carrier oscillator; f, following apparatus.

The second method -- the phase compensation method (Figure 2) -- allows a single side band signal to be formed at the frequency radiated by the transmitter. The amplitude modulated signals from balanced modulators BM-1 and BM-2 are applied to a common load. Since the audio frequency signal and the carrier are phase shifted by 90°, the components of one side band of each signal are compensated (balance out); those of the other side band are augmented.

In order for the degree of suppression to be sufficient, the phase shift between signals must be maintained at precisely 90° and their amplitude must be exactly equal in each modulator. The required phase relations of the signals are provided by wide band low frequency and high frequency phase shifters. The wide band low frequency phase shifters are the most complex elements of the system, and allow an accuracy of phase in the 300-6000 Hc band of at least 0.2°, and an amplitude precision of ± 1%. Due to difficulties in maintaining phase balance and amplitude balance of the signals during usage, the degree of suppression of the signals of the unwanted side band will not exceed 40 *db* (voltage factor of 100). Therefore, this method is primarily used in radio amateur designs.

A third, combined method differs from the first two in that it requires no complex high frequency band pass filters with high selectivity or wide band low frequency phase shifters. However, the signal transmitted is distorted in apparatus designed according to this third principle. Noise (whistling) appears due to inaccurate phase shifting of the high frequency carrier and incomplete balance in the modulators.

The single side band signal is usually formed at low power levels (0.1-10 watts) in order to suppress the carrier and unwanted side band as completely as possible, as well as the secondary radiation (combination oscillations) formed

in the balance modulators. Then it is amplified in the intermediate and output amplifiers of the transmitter to the required power level. The amplifier should not distort the signal, in order not to decrease the intelligibility of the message being transmitted or cause spurious radiation, creating interstation interference. This is especially important in multichannel communications, where combination oscillations may result in the conversation on one telephone channel being heard in another (cross-talk).

The selection of type of electron tube and its operating mode is of primary importance in reducing non-linear distortion in amplifiers. Tubes with large straight sectors in their characteristics and parabolic lower curve sectors (with so-called "left" characteristics) are preferable. Operation of the tube with a cut-off angle of 90° is most suitable. For this same purpose, negative feedback is used in amplifiers; the essence of negative feedback is that a portion of the voltage from the output of the amplifier is returned to the input in counter phase. This results in a reduction of the amplification of the primary signal and of the frequencies causing distortion. The weakening of amplification of the primary signal can be easily restored, while the signal distortions are reduced.

In order for the frequency stability of the oscillations radiated to be high (for example, no worse than $1 \cdot 10^{-6}$ in the frequency band between 1.5 and 30 MHz), all subcarriers transforming the signal are usually created by a common master oscillator.

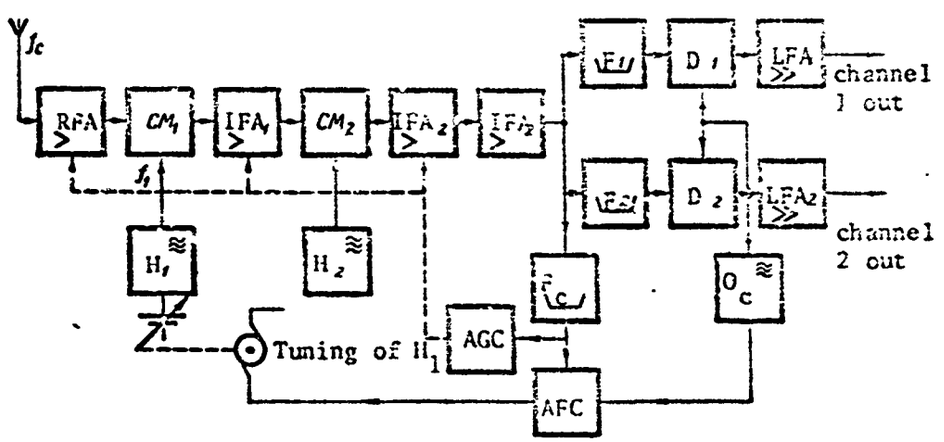

Figure 3. Block diagram of single side band receiver.

Modern transmitters use exciters with quartz-band stabilization. In these transmitters, the large number of operating frequencies are stabilized by one basic crystal. These exciters form a net of highly stable, extremely precise discrete frequencies with intervals of 1 KHz, 500 or 100 Hz. All the required frequencies are produced by addition, division and multiplication of the stable frequency of the basic crystal.

The receiver used in single side band radio transmission is a superheterodyne with double frequency conversion. (Figure 3). The signal received enters the RF amplifier RFA, then is twice converted in balanced converters (O_1, CM_1, O_2, CM_2) to the lower intermediate frequencies. The first IF is selected rather high (2-3 MHz), the second IF -- on the order of 100-300 KHz. The primary amplification of the signal is done at the first IF.

The side band is separated by band pass filters F_1 and F_2, then goes to demodulator D, to which the local carrier oscillator output is also fed from oscillator O_c. A low frequency signal is formed at the output of the demodulator, then goes through amplification to the final telephone apparatus.

The first heterodyne H_1 is an oscillator with quartz band frequency stabilization.

Relative constancy of the signal level at the transmitter output is provided by the automatic gain control AGC, acting under the influence of the residual carrier (pilot signal). The rectified negative voltage of the pilot signal from the AGC detector is fed to the grids of the RF and IF amplifier tubes, causing an inversely proportional change in amplification of the receiver.

The carrier frequency which is reinserted (in the receiver) and that which is suppressed (in the transmitter) should be synchronous, since inaccuracy in carrier reinsertion reduces the selectivity and naturalness of the signals received. For commercial telephone transmission, synchronization should be within 10-20 Hz. In telephone transmission when natural sounding speech is important and with secondary multiplexing of a telephone channel using tone telegraph, precise reinsertion of the carrier, both in frequency and in phase, is required.

This strict requirement is fulfilled: precise automatic tuning of the frequency and high stability oscillators are used. In the first case, the carrier oscillations in the transmitter are not completely suppressed, but rather are retained as a residual carrier at 10-20% of the maximum radiated power. In the receiver, this carrier is separated by a special narrow band filter (pass band 50-100 Hz) and a pilot signal is developed which is used to tune the local carrier oscillator automatically. The pilot signal is amplified and limited to eliminate the influence of fading, then compared with the local carrier in a phase detector. A voltage of the proper magnitude and polarity is developed at the output of the comparison device. This voltage is used to operate an electric motor which rotates a variable condenser to change the frequency of the first heterodyne until the frequency of pilot signal and local carrier are identical. However, this automatic tuning of frequency requires an additional expenditure of power for radiation of the pilot signal, and complicates the receiver (since an additional receiving channel must be created). External random and intentional interference will hinder the operation of the automatic tuning system.

Modern techniques for the production of precise frequencies allow frequency stability on the order of 10^{-7} to be produced in the short wave frequency range (3-30 MHz); at a frequency of 30 MHz, synchronism of suppressed and reinserted carriers with an accuracy to 1-2 Hz is possible. This method eliminates the necessity of automatic tuning of frequency, and simplifies the receiver. However, in many cases, automatic frequency tuning is unavoidable. Without automatic tuning, it is impossible to achieve high quality reproduction of signals, due to frequency changes caused by the Doppler effect. Single side band radio communications with high speed aircraft is possible only with automatic frequency tuning using the pilot signal. Therefore, modern single side band radio transmission equipment is designed to make communications both with automatic frequency tuning and without it possible.

Single side band radio links are used for multichannel telephone and telegraph communications. The second (free) side band can be used for a second telephone channel, resulting in the formation of a two-channel telephone system with independent side bands (the band width is generally 300-3400 or 100-6000 Hz).

The telegraph channels are formed by secondary multiplexing of telephone radio channels using tone telegraph equipment, which allows 12 to 16 or even more telegraph channels with transmission rates of 50 bauds to be created in one telephone channel.

The current samples in the telegraph equipment are transmitted as tone signals, keyed by frequency or phase (Figure 4). With frequency shift keying the positive (current) telegraph sample corresponds to one frequency (the higher), the negative (no current) sample to another frequency (the lower). These frequencies differ from each other by 60 to 170 Hz. The telegraph channels are frequency separated: the median frequencies of the channels are separated by 120-340 Hz.

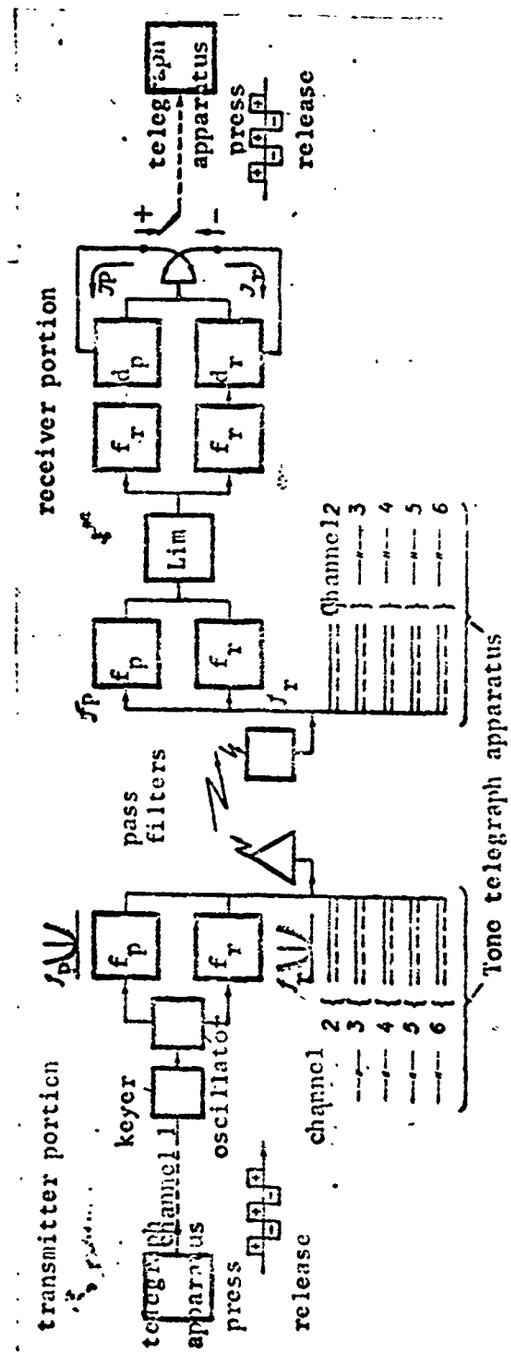

Figure 4. Principle of tone telegraph operation on telephone radio channel.

At the reception point, the group of tone signals is reproduced at the output of the radio receiver and sent to the tone telegraph apparatus, where the signals are separated into channels. In the tone receiver, the frequencies

of the samples are separated by filters, then amplitude limited, once more separated by narrow band filters and separately detected. The rectified signal voltages of the samples act on relays controlling the telegraph apparatus.

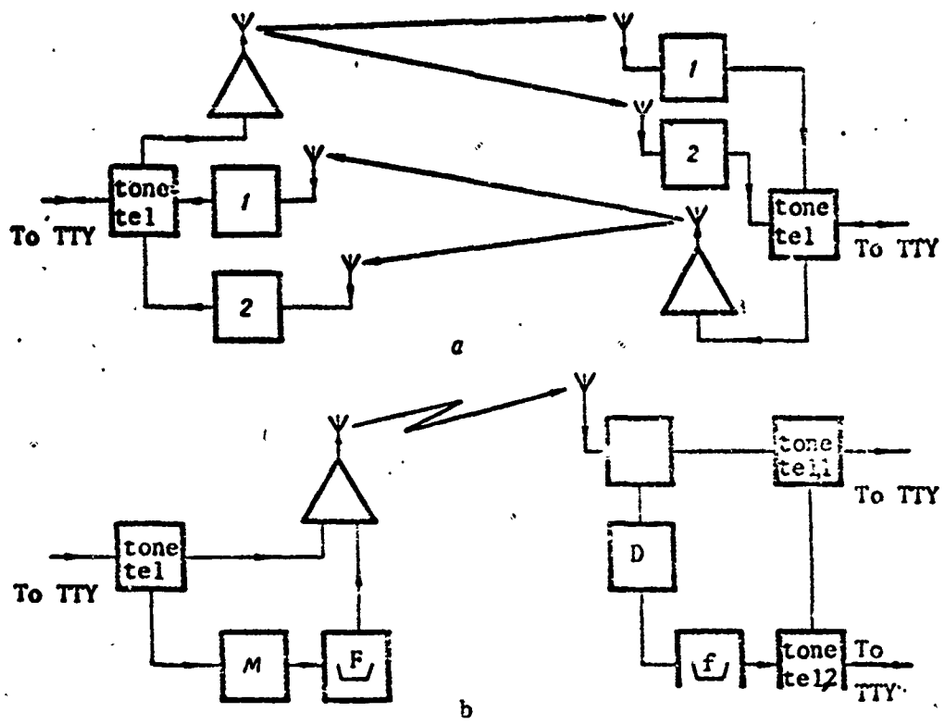

Figure 5. Diversity reception:
a, space diversity; *b*, frequency diversity.

Changes in the state of the ionosphere and the multitude of atmospheric and industrial interference sources cause deep and frequent changes in the level (fading) of the signal received. Under these conditions, in order to provide high communications stability, double space or frequency diversity reception is used (Figure 5).

With space diversity reception, the signals are received at each end of the radio relay link simultaneously with two receivers and two antennas separated from each other by distances equal to 5 to 10 wave lengths. Experience has shown that signals do not fade simultaneously at all frequencies received by a radio receiver, or at the same frequency as received by two antennas separated by some distance. As a result, when the signal fades in one receiver it will be sufficient for normal reception in the other. The individually received signals are added across a common load as DC, so that a strong signal acts on the telegraph apparatus at all times.

In frequency diversity reception, each telegraph sample is transmitted simultaneously on two frequencies (on two tone telegraph channels) separated by 400-600 Hz or more. The two signals are added across a common load at the output of the radio receiver. In order to transmit each sample on two frequencies, the tone signals are additionally converted in the modulator. Thus, the press signals correspond to two-tone frequencies f_p and $f'_p=f_d-f_p$; the release samples correspond to f_r and $f'_r=f_d-f_r$. These signals are introduced into the telegraph channel of the transmitter. The two frequencies correspond

to two different frequencies in the rf spectrum radiated by the transmitter, separated by the same frequency difference.

In the radio receiver, the signals received are converted into the signals of the two-tone frequencies f_p, f'_p and f_r, f'_r, where are sent to the common amplitude limiter. As we know, the weak signals is suppressed by the stronger signal in a limiter. After the limiter, the signals are filtered, detected, added and sent to the telegraph apparatus.

The selection of a diversity reception method depends on the specific features of wave propogation in the direction being used and the number of telegraph channels required. With space diversity reception, twice as many tone telegraph channels can be placed in one radio channel as with frequency diversity reception; however, this method requires two receivers and two antennas. With frequency diversity reception, only one receiver is required, but the number of telegraph channels which can be transmitted is only half as great.

Secondary multiplexing of single side band radio channels requires extremely accurate synchronization of the carriers. Otherwise, the multichannel tone frequency spectrum will be displaced in frequency and strong distortion of the telegraph signal will result.

With simultaneous multichannel transmission, the transmitter power is distributed among the channels. The power of each of n channels is n^2 times less than the power of the transmitter when used for single channel operation. The loss in power per channel can be reduced by time phasing the telegraph channels, i.e., by dividing the work so that the probability of corresponding press or release signals in all channels is small. When this is done, for example, the power in each channel of a three-channel system is reduced by only a factor of five, not in proportion to the square of the number of channels (by a factor of nine).

In spite of this deficiency, multichannel transmission is technically expedient and economically justified in most cases. The distribution of power among the channels can be controlled by changing the number of channels active. During good transmission conditions, low channel power is sufficient; therefore, their number can be increased. During poor propogation conditions, the number of channels can be reduced to increase the power in each channel.

Multichannel telegraph communications using single side band short wave radio links has a number of advantages. First of all, there is the great flexibility of operations: any telephone channel (left or right of the carrier) can be used for secondary multiplexing, and transition from one telegraph channel to another can be achieved by switching the terminal telegraph apparatus. This flexibility is very suitable in case selective fading occurs in any portion of the single side band channel spectrum. Then, high throughput capacity can be achieved at each end of the communications link with great reliability.

Single side band short wave radio communications is used abroad in aviation and at sea. The usage of single side band communications in mobile stations operating in the UHF frequency range has been considered impossible, primarily due to difficulty in producing the required frequency stability. Achievements in this area in the last decade have made it possible to use single side band communications for these purposes.

Radio communications, double side band and single side band

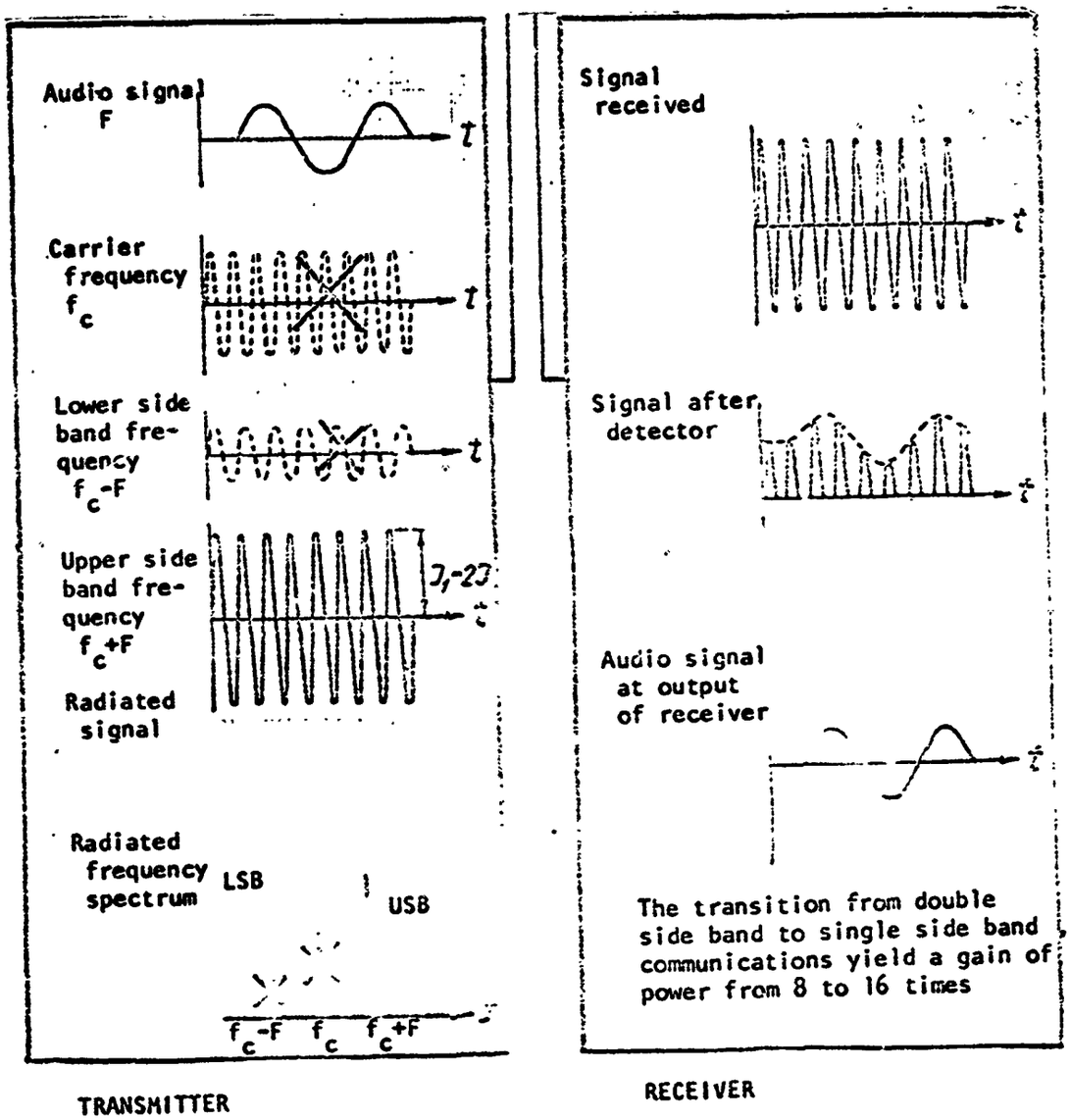

[Following is a translation of blurbs printed in boxes on pages 18, 19 and 20.]

Better than Shosh's Weapon.

Russian aviators were the first to appreciate the value of the automatic weapons created by General Major V. G. FEDOROV, the famous inventor of automatic weapons. In a telegraph written in 1916, the Chief of the Air Force stated, "The machine gun invented by General FEDOROV gave excellent results when tested on our aircraft. I request that 100 of these weapons be ordered for our aviation. This weapon is better than Shosh's weapon in all respects."

This is the conclusion of the Commander of the Aviation Division: "General Major FEDOROV'S weapon is the only suitable model for light airplanes."

The Architech-Weapons Smith.

In 1915, the Russian architech Drogoslav suggested an instrument to convert a rifle to an automatic weapon.

"The device weighs about two pounds," he wrote, "can be easily placed on the rifle and easily removed; it does not require remaking of the weapon or any changes; it is made by stamping from 2.5 mm iron sheet. The most important technical problem of cooling has been worked out so simply and efficiently that a weapon firing as an automatic weapon with this device is under better operating conditions than when firing as an ordinary rifle."

Creator Unknown.

Anyone who was familiar with the model 1891/30 rifle long remembered the wooden front hand guard. Who designed it?

In a report of the commission on the equipping of infantry battalions with the Berdan weapons, addressed to the Headquarters of the Infantry Battalion Inspector, it was stated that the wooden hand guard planned by the master weapons maker of the infantry battalion had been "successfully tested in the battalion and approved by the Commission, and serves for reduction of friction of the cleaning rod on the wall of the channel during cleaning of the weapon, and should be immediately produced in battalion weapons shops, to be ready for arrival of the rifles.

"I include 20 models of this front hand guard to be sent to the battalions and request that one ruble be returned to our battalion, in payment for the manufacture of these models."

The name of the capable creator of this simple, but very necessary attachment, which has proven itself over many decades, has never become known.

Tekhnika i Vooruzheniye, No 11, 1966, pp. 24-27

USING ALTERNATING CURRENT

By Engineer Major N. MIKHEYEV

The power supply units for radio equipment should not be used where alternating current lines are available, in order to conserve motor operating time. However, where available power is insufficient or where the voltage in the power network differs from the nominal voltage of the apparatus too greatly, it is not possible to use the alternating current available.

If the line from a transformer substation has not been run to the consumer, then the cross-section of the conductor to be used is calculated on the basis of the permissible voltage drop ΔU, defined as the difference between the minimum voltage in the network U_c min and the minimum permissible voltage necessary for supplying the apparatus U_s.

The numerical value of the permissible voltage drop is calculated using the formulas:

$$\Delta U = \frac{nLI_н \cos\varphi\, 10^5}{\rho q U}\ \%$$

(for a two-wire AC circuit) and

$$\Delta U = \frac{\sqrt{3}\, LI_l \cos\varphi\, 10^5}{\rho q U_l}\ \%$$

(for a three-phase line), where n is the number of conductors; L is the length of the line, km; $I_н$ is the load current, a; I_l is the line current, a; ρ is the electrical conductivity (for copper, ρ=57, for aluminum, ρ=33); q is the cross-sectional area of each core in the cable, mm^2; U, U_l are the nominal and line voltages, v. Using these formulas, it is easy to determine the voltage drop for copper and aluminum conductors and cables or to select the cable cross-section (for which the permissible voltage drop in the lines must be known). The formulas can be used for calculation of short conductor sectors as well as in cases when the line voltage is considerably greater than the nominal power supply voltage.

If the voltage in the power supply system is less than or equal to the nominal voltage required by the equipment, and the length of the line from the transformer substation to the consumer is great, voltage losses can be reduced by selecting conductors with the largest economically expedient cross-sectional area. In this case, voltage regulators (Table 1) and voltage adding transformers are used.

We will not analyze the operation of induction voltage regulators and auto-transformers with movable shorted coils in detail; the weight of these apparatus is 370-500 kg and 270-4925 kg respectively; their throughput power capacity is 4 to 15 kva; and 25 to 250 kva. Their usage is recommended under stationary conditions in dry rooms with temperatures below 35°C.

Autotransformers are widely used for voltage control. However, most autotransformers allow a 220 v current to be increased by only 30 v (about 14%). If the power supply voltage drops by more than 20%, autotransformers will not provide the required correction. Also, series produced voltage regulators are large and heavy and their idle current draw is great.

Table 1

Parameters	Type of regulator							
	RNO-250-0.5	RNO-250-2	RNO-250-5	RNO-250-10	RNT-220-6	RNT-220-12	RNT-180-2.5-1	RNT-180-2.5-2
Power, kva:								
- for long operation. .	0.375	1.5	2	7.6	3.8	7.6	2.5	2.5
- for 1 hour operation.	0.5	2	5	10	6	12	-	-
Current, a, with power supply voltage 127 v:								
- for long operation. .	0.9	4	8	20	7.5	15	-	-
- for 1 hour operation.	1.2	5	12	24	12	24	-	-
Current, a, with power supply voltage 220 v:								
- for long operation. .	1.5	6	8	32	10	20	8	8
- for 1 hour operation.	-	-	20	40	16	32	-	-
Limit of control of output voltage.	0-250	0-250	0-250	0-250	0-220	0-220	0-180	0-180

When the power supply voltage required cannot be produced by ordinary voltage regulation circuits, voltage regulators can be connected in unusual ways (reverse connection, connection of two regulators).

Reverse connection (Figure 1) is used if the regulator is operating in a mode in which the core is not nearly saturated. In this mode, the regulator must be protected from possible high current. A limiter is connected on its sliding contact. For this, the regulator arm is turned so that the maximum number of turns is connected through the ammeter to the power supply. Then, the dial is rotated until the current drawn from the power supply is equal to the nominal current for one hour operation of the regulator (see Table 1). After this, the limiter is set.

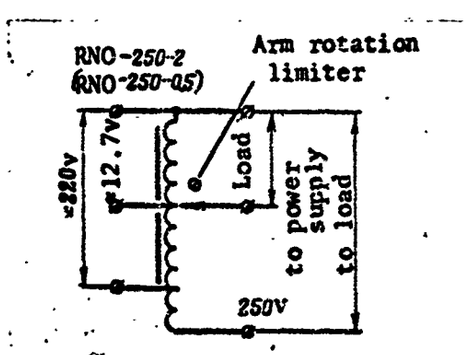

Figure 1. Plan for reverse connection of voltage regulator.

It has been experimentally established that the RNO-250-0.5 voltage regulator increases voltage to 500 v when connected in this manner; the RNO-250-2 voltage regulator increases voltage in this operating mode to 350 v.

Two voltage regulators, such as the RNO-250-0.5 and the RNO-250-2 (Figure 2) allow the output voltage to be increased to 450 v. Reverse connection of RNO-250-0.5 voltage regulators (Figure 3) can be used to produce voltages at the output of up to 1000 v; using RNO-250-2 regulators, voltages of up to 700 v can be produced. In this case, limiters must be installed on the regulator slide contacts as noted above.

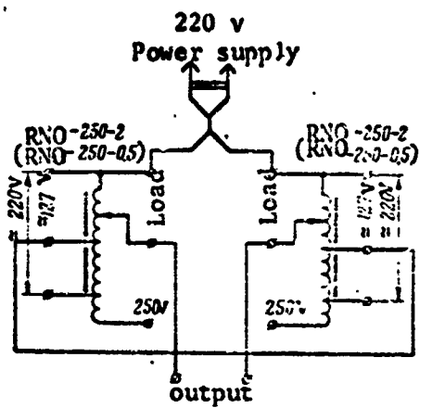

Figure 2. Plan for control of voltage using two regulators.

The simplest method for voltage regulation is the usage of voltage adding transformers (Figure 4). Winding P of transformer T_1 is connected in series with the consumer; the voltage on this winding may be added (with coordinate connection) with the power source voltage or subtracted from it (when connected oppositely). The output voltage V_{out} is determined by the algebraic sum of the input voltage V_{in} and the voltage taken from the secondary: $V_{out}=V_{in}\pm\Delta V$.

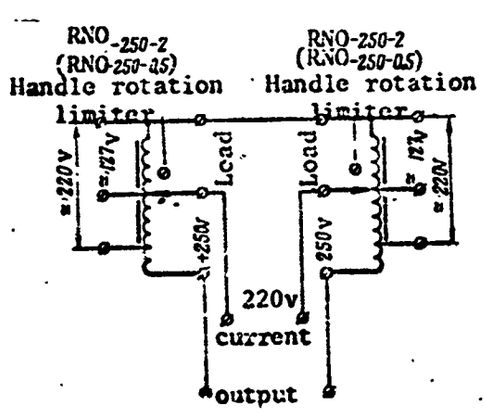

Figure 3. Plan of reverse connection of two voltage regulators.

The advantage of this method is a transformer T_1 is designed for low power, is small and light, i.e., it is designed to take only the voltage adding power P_t.

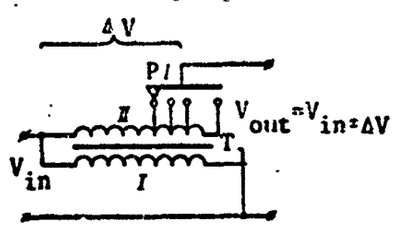

Figure 4. Circuit for control using voltage adding transformer.

The power P_t is related to the throughput power (power of consumer P_c) by the following relation:

$$P_t \geq \frac{V_{reg} P_c}{100},$$

where V_{reg} is the percent of change of the line voltage from the nominal value of power supply voltage. Thus, if the line voltage must be increased by 10%, for example, the voltage adding transformer power can be designed for a power 1/10th of the required power.

A voltage adding transformer is designed using well-known formulas after first determining its power from the formula above. Voltage adding transformers should be used when power need be regulated only within limits of ± 35-40%. They operate successfully with a change in load current. Experience has shown that they can be used expediently with consumer powers from a few dozen watts to tens of kilowatts. For example, under military conditions, voltage adding transformers are best used for protecting illuminating lamps from over heating where objects must be guarded at night; for providing failure free operations of electric motors, both when the voltage is increased and when it is decreased; for power supply of electronic equipment, especially if the electric power line is long and involves considerable power losses.

For this purpose, power supply regulators of types RNO-250-0.5 and RNO-250-2 can be used by making a few alterations. This is rather easy to do. Four windings of six turns each, made of 3.2 mm diameter wire, must be added to the end of the toroid. The ends of the wires must be placed on a terminal board, and connected either in series or parallel. Two layers of insulating tape are wound around the sector of the toroid which carries the additional windings. This RNO-250-2 modified voltage regulator will allow regulation of voltage to high power consumers as shown in Table 2. It can also be used as a source of filiment voltages at 6.3; 12.6 and 26 v.

Table 2

Control limits, v	Greatest available power (va) for power supplies with voltages:	
	127 v	220 v
± 6	15.000	28.000
±12	7.000	14 000
±24	3 500	7 000

Voltage adding transformers should be installed by the entrance to a room (barracks, storage area, shop). Lead outs from its secondary winding can be used to control the voltage depending on the time of year or day.

Power supply for three-phase consumers requires that no voltage asymmetry be present. The voltage adding transformer is connected to the phase break, where the voltage differs from the voltage of the other two phases. However, it will not provide smooth voltage regulation. This deficiency can be eliminated in combined circuits in which the voltage on the primary of the transformer is changed using a voltage regulator (Figure 5).

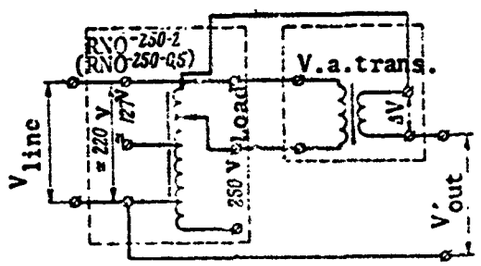

Figure 5. Outline of combined method of voltage regulation.

Low power consumers with active load (up to 100 v) can be protected from over-voltages in such apparatus as light bulbs, soldering irons, etc., by connecting a condenser (2-10 μf) the exact capacitance to be selected by practice, in series with the apparatus being supplied.

The methods described above for controlling voltages over wide limits often require continuous checking, since a sharp increase in the voltage (especially if a new load is connected) may cause the apparatus to fail. For the employment of radio equipment in locations where the power supply voltage changes continuously, electromagnetic (ferroresonance) voltage stabilizers or voltage stabilizers with saturation chokes are used.

The most wide spread are the ferroresonance stabilizers (Table 3). They provide high output voltage stability, non-inertial operation, and retain their parameters over their entire service life.

Table 3

Type of Stabilizer	Power, va	Input voltage, v	Output voltage with full active load, v	Load current a	Weight, kg	Operating temperature, °C
SNE-120-0.1	100	120 and 220	120±3	0.8	7	-10÷35
SNE-220-0.5	500	120 and 220	220±5	2.3	25	-10÷35
SNE-220-0.75	750	100 and 220	220±5	3.4	32	-10÷35
S-0.09	90	127 and 220	127±3	0.71	7	-10÷35
S-0.28	280	220 and 380	220±5	1.3	15	-10÷35
S-0.5	500	220 and 380	220±5	2.3	25	-10÷35
S-0.75	750	127 and 220	220±5	3.4	32	-10÷35
S-0.9	900	220 and 380	220±5	4.1	37	-10÷35

Voltage stabilizers with saturation chokes (Table 4) can have either AC or DC outputs and provide high inertial characteristics, which is increased in powerful stabilizers.

Table 4

Parameters	Type of stabilizer		
	SNPT-2	3.5 kw	6 kw
Input power, kw.	2.3	3.5	6
Long term load current, a. . . .	10.5	16	27
Limit of change of input voltage, v.	176-231	176-242	176-242
Output voltage, v.	220	220	220
Limit of change of load current, a.	2.1-10.5	1.6-16	2.7-27

The method of power supply voltage regulation and stabilization used in each concrete case must be selected depending on the conditions of utilization and apparatus to be supplied.

J-1383

Tekhnika i Vooruzheniye, No 11, 1966, pp. 28-33

CLASSES IN THE YARD

By Engineer Colonel A. TOKAREV

Our experience in indoctrination of the troops has made great advances in recent years. Many chast' and podrazdeleniye are mastering extremely complex combat vehicles, units and sets of equipment in shorter periods than was previously possible. Doubtless, this has been achieved due to the high methodological mastery of officers and sergeants, but a great deal depends on the training equipment base as well.

We are creating training classes allowing the troops to study with minimum loses of time. The fact that our classrooms are all placed in one building (Figure 1) in itself creates conditions for simultaneous performance of drills involving entire podrazdeleniye. Up to ten crews can study firing, while the same number studies the forcing of water obstacles. Also, commanders and gunners can study firing while mechanics and drivers are studying their equipment. If the commanders, gunners and loaders are working on communications equipment or drilling on firing tasks, improving their specialties, the mechanic-drivers may be working with an equipment maintenance class. Thus, 50 to 60 crews can work in the training center simultaneously. This is very important, not only for bringing the podrazdeleniye up to shape, but also because reserves of time are created for increasing the qualification of the troops and mastery of related specialties.

Another, no less important advantage of this training center is the fact that it is supplied with the most modern training equipment and material, which cannot be available in a company or even in a battalion.

The classes are supplied with equipment designed to allow training of the tank troops with minimum loss of time and to allow combination of theory and practice.

The fire training center has ten tanks on rocking frames, allowing tank firing training to be performed both by specialties (commanders, gunners, loaders), and as a full crew. Since the training process requires expenditure of electric power, there is a special generator to supply DC current to the tank equipment. In this way, we save our batteries and provide constant combat readiness. The fire training center has all necessary equipment for fire training. The tankers accumulate skills here in firing from place, from the march and from brief halts. This type of fire training center was described in the journal *Tekhnika i Vooruzheniye*, No 4, 1965.

In the class for underwater driving training, the equipment used in underwater driving can be studied. For this purpose, we have plans and training aids. There is a pool for shallow divers training. The pool measures 5.6 × 3 × 3 m. In this pool, the troops can accumulate skills in movement and transfer of loads under water. Practical drills on installation and removal of the equipment for underwater driving can be performed on a training tank installed in the classroom. This tank can also be used for studying performance of such operations as installation of the air supply tube, exhaust valves, and preliminary and final preparation of the vehicle for underwater driving. Using

special trainers, the crews "drive" tanks underwater. One such is the underwater trainer shown on Figure 2; it allows the imitation of evacuation of the crew from a submerged tank. It is flooded from a water tank filled with warm water from a reservoir using a pump with a discharge of 55 m^3/hr. The water can be drained from the basin in an emergency in 6-7 seconds. The underwater trainer is illuminated inside. There is a provision for signals from the vehicle commander and the mechanic-driver, as well as a special hatch (bottom left) for emergency escape of the members of the crew.

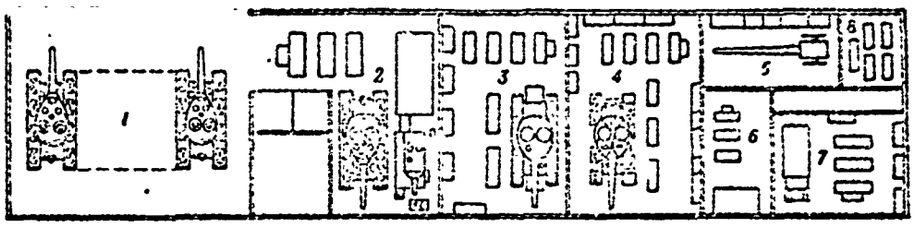

Figure 1. Plan of training center:
Fire training area (*1*) and classrooms (*2*, underwater driving areas; *3*, equipment maintenance training; *4*, technical training; *5*, fire training; *6*, training on weapons of mass destruction; *7*, motor vehicle training; *8*, communications training).

GRAPHIC NOT REPRODUCIBLE

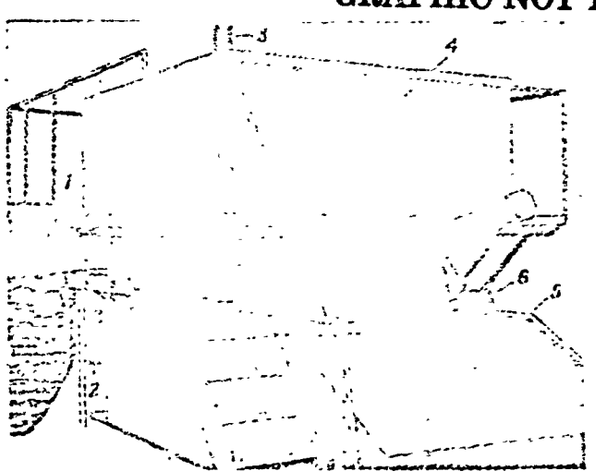

Figure 2. Underwater trainer:
1, tank; *2*, reservoir; *3*, air supply tube; *4*, water tank; *5*, control panel; *6*, lights.

The drill leader controls the actions of the crew from the control panel and each member of the crew is observed visually. For this purpose, there are special windows by the mechanic-driver, commander, gunner and loader positions.

The tank is driven in the direction required in this trainer using the directional gyro illustrated on Figure 3. We note that this mechanism is made of parts (mechanisms) from a tank, which means that it can be made in any repair podrazdeleniye, so that the crews can be trained without any differences from actual usage. The method is extremely simple. The drill leader shows the tanker being trained the direction and, at the same time,

rotates the trainer to the right or the left of the assigned direction of movement using the remote control panel. The mechanic-driver, controlling the vehicle, restores the proper direction according to the indications of the directional gyro.

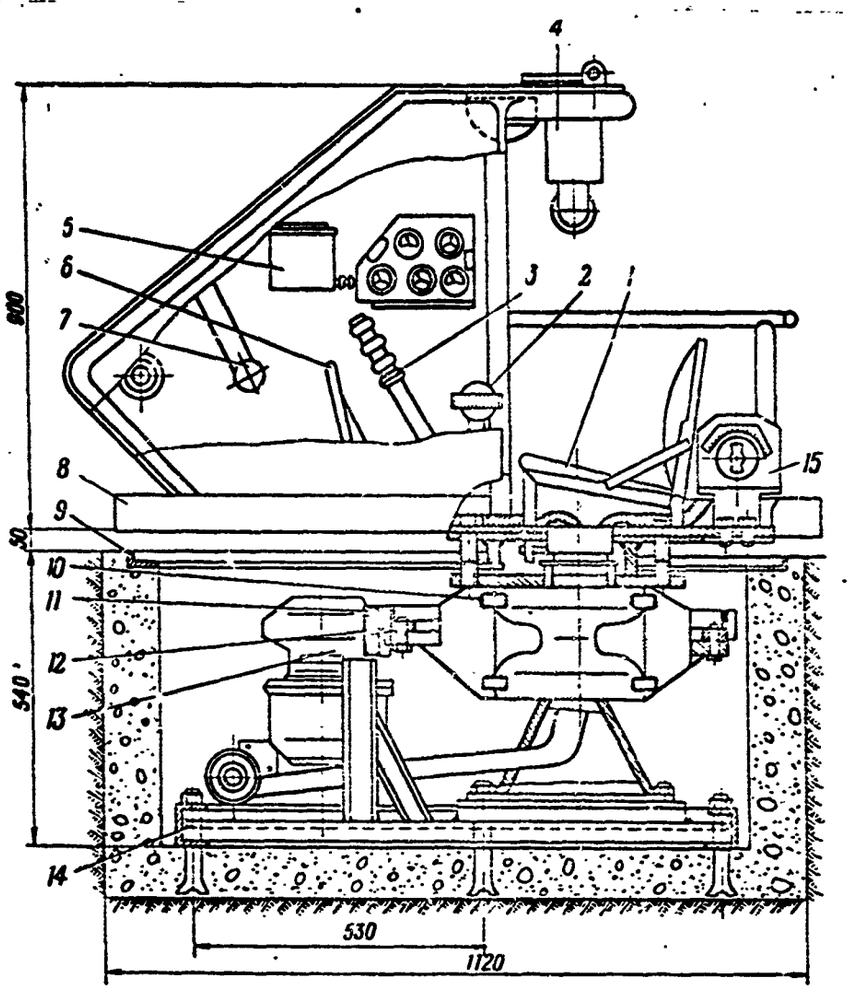

Figure 3. Trainer with directional gyro:
1, seat; *2*, gear shift lever; *3*, control lever; *4*, observation device shaft; *5*, directional gyro; *6*, gas pedal; *7*, steering clutch pedal; *8*, trainer frame; *9*, upper frame; *10*, mount; *11*, *12*, driving and driven gears; *13*, electric motor; *14*, frame; *15*, controller.

The equipment of this type which we have mentioned and described shows that all preliminary drills can be performed here. The following training methods can be suggested to make most sufficient use of this training base.

Nine to ten crews can study in one classroom at one time. Three study the structure and usage of the IP-46 gas mask and safety measures associated with its operation. The same number train in the basin (one crew working, another operating the safety equipment, the third preparing for performance of drill). Two to three crews work in the underwater trainer, and one or two crews work in the tank and on the trainer with the direction gyro.

The maintenance class (Figure 4) is reminiscent of a production room. It is supplied with all the equipment required to perform all types of technical

maintenance, and for study and practice in application of tank pool equipment. In creating this classroom, we were guided by the principle that practical performance of operations directly using the material involved is the most important factor in training crews. The equipment is so selected that it allows servicing and repair of vehicles as applicable to both stationary and field conditions.

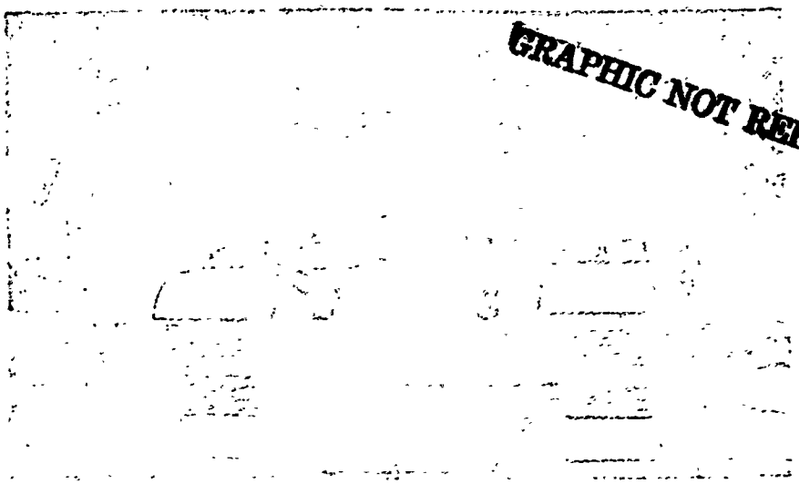
GRAPHIC NOT REPRODUCIBLE

Figure 4. Maintenance classroom

This is not difficult to see if we simply list the equipment in the classroom. Here we have apparatus for cleaning of filters, greasing of vehicles and oil separation. An objective evaluation of the state of the vehicle can be made using the instruments for testing power transmission and motor units (the piezometer, compressor, the PPF-1 and the PPK-1). The class has one set of universal attachments and equipment for conservation. Compressed air is available for servicing as are lifts, baths, tanks and a special lead for removal of exhaust gases. Stands and panels are used to demonstrate the tools, technological plans, POL samples, rules of maintenance and measures to be used to prevent breakage and accidents. Characteristic damage to equipment is displayed on a special panel.

In order to get some idea of the number of people who can study in this classroom, let us present one variant of organization of the working locations. For example, four sub-groups in various locations may study: the structure and operation of vehicle pool equipment, the set of universal appliances, the standard spare parts and tools kit and safety and anti-breakage measures. At the same time, working locations may be set up on the process of servicing filters, the drive train and checking stabilizers.

Tankers may study adjustment of the transmission linkages (checking their operation with a fully operative motor and transmission), the installation and removal of batteries, filling of the tank with POL using individual equipment, starting of the motor, etc. More difficult work such as checking of electric circuits, replacement of sections and units in the tank may also be practiced. When working as a crew, the men can practice checking the norms for all types of technical servicing of the machines and preparing vehicles for short term storage.

The technical class, as usual, has various reserve units and parts which are electrically powered. This not only allows a deeper study of their

structure, operation and servicing, but also allows certain adjustments to, for example, transmission linkages, main clutch and planetary rotation mechanism to be performed. The special equipment instruments can be adjusted at a stand which includes all mechanisms and units of the tank. Here also the students can locate and correct defects in the electrical equipment circuits, train and accumulate practical skills in operation of the electric drives. The operating stand can be used to study all cases of early failure of mechanisms and units, as well as measures to prevent breakage and accidents.

Although primary attention in technical training is now given to practical exercises, we believe that a technical class of this type has its significance. It is necessary also because it is used for technical training of the officers and mechanic-drivers for improvement of qualifications.

The remaining classes in the training building shown on Figure 1 are designed for specialty area studies. For example, in the communications classroom nine to ten crews can train in the usage of the tank intercom system and radio equipment.

The complex training centers which we have created are usually located at the vehicle pool which allows practical exercises to be combined with work using the equipment.

Tekhnika i Vooruzhenive, No 11, 1966, pp. 32-33

THE NORMS ARE NOT GOALS IN THEMSELVES

By Colonel M. PERVUKHIN

Indoctrination of tankers on the norms aids in increasing their practical skills and, consequently, in reducing the time periods required for servicing vehicles and making them ready for combat.

For example, in the tank company where the technical supply officer is Officer RYBIN, all the mechanic-drivers can service their tanks with certainty and in the established time intervals. It is not surprising that these tankers received a high evaluation on technical training during a recent inspection.

However, there are podrazdeleniye where the necessary attention is not given to mastering the norms. Only this can explaine the low practical skills of the mechanic-drivers of tank companies where the technical supply officers are Officers GANSPURG and STEPANOV.

An inspection showed that here, in their rush to exceed the norms, practical work on servicing the tanks is performed carelessly, and the technical conditions are not followed. For example, when filling a tank with fuel and measuring the level of POL in the motor and transmission, many mechanic-drivers do not clean the caps or the area around them before opening them. Dirty tools are used and filler caps and filter screens are placed on dirty areas on the floor. Fuel and lubricants are often spilled as the machines are serviced. This not only causes an uneconomical loss in expensive materials, but also results in contamination of units and mechanisms on the tanks. Other even worse disruptions of the technical conditions are permitted. For example, some mechanic-drivers, after placing the night vision instruments in the operative position and turning on the power supply, test them with the diaphragms and cover screens fully open. Of course, using this equipment in this way is categorically forbidden, since the photoelement cathodes will be light struck and made useless.

In installing the removable portion of the underwater driving equipment, students often do not check for the presence or condition of sealing rings, and bolts are tightened unevenly or incompletely. This carelessness might cause water to leak into a tank during a water crossing.

When treads are tightened, the teeth of the crank and arm are not fully placed into the link and the tension mechanism is not loosened. Sometime, in order to hasten the process of installing batteries, the conductors are not firmly fastened to the clamps and batteries are placed loosely in their places. Of course, the tank won't even start!

These examples indicate that in some podrazdeleniye drills are performed with an eye on the clock, primary attention being given to the amount of time which a student requires for filling a norm. If the job is done in the stated time, the practical skills are considered good. The quality of the work which was done and the technical conditions which were broken to save time are not taken into consideration. This "method" of performing drills can only result

in harm.

Some drill leaders allow certain indulgences and failure to come up to the conditions of the norms in order to give higher grades to their students. As is known, the tools and equipment in the ZIP should be placed and fastened into their proper places and the turret should be rotated with the cannon forward; the hatch cover fastening bolts and filler caps on fuel pipes must be fully tightened with a wrench, etc. After the norms are fulfilled, if there is no special indication otherwise, everything should be returned to its initial position. There is no doubt that these requirements are known to everyone, but they are unfortunately not always observed. For example, the ZIP tools may not be cleaned or returned to their place, bolts and caps may not be fully tightened, and the turret may not be returned to its initial position.

The following is also sometimes observed: students perform part of their operation rapidly but not all of it, or some of the conditions of the job may not be met. For example, the wrenches needed are extracted from the ZIP and placed in a convenient place near the job, or the bolts and caps may be slightly loosened in advance. Before fulfilling the norm for installation of the night vision instrument of the mechanic-driver in the "combat operations" position and during testing, students may loosen the fastening screws and remove the sealing ring in advance. After the daytime vision instrument is removed from the shaft, it may be placed on the tank floor behind the mechanic-driver's seat, not in its place, from which the night vision instrument has been removed.

Consciously or not, with this sort of training we fool only ourselves. The tankers not only do not improve their practical skills, they lose the skills which they have accumulated, since the work is done improperly and in the wrong order.

Study with the norms will be useful only when quality and the sequence of performance of operations are considered as well as time. The norms are not a goal in themselves, but rather a means for improving the practical skills and increasing the combat readiness of the tankers and their equipment.

Tekhnika i Vooruzheniye, No 11, 1966, pp. 34-39

ORGANIZATIONAL REPAIR SHOPS

By General Major of Engineering and
Technical Service A. KONDRATENKO

I suppose there is no special need to emphasize the importance of rapid and good quality repair of armament damaged during usage or on the field of battle. It is sufficient to point to the experience of the Second World War. Many repairmen are acquainted with the number 100,000, the number of artillery weapons repaired from the beginning of the war to 1943. This number will impress you if you consider that our artillery industry produced 130,000 new weapons of various calibers in 1943. The restored equipment allowed losses to be made up rapidly. Many repair workers were awarded orders or medals for rapid, high quality repair of artillery systems.

The maintenance of missile artillery equipment in a condition ready for battle is aided, as we know, by a single planned preventive maintenance and repair system. This system includes routine maintenance, technical servicing No 1 and No 2, seasonal maintenance, adjustment operations (for missile equipment), routine, middle echelon and capital repair.

Routine maintenance and technical servicing No 1, as a rule, are performed by the combat crews, with the help of specialists from the organizational repair shop as required. Technical servicing No 2 is performed in the main organizational repair shops, with the participation of the combat crews. This places a great deal of responsibility on the organizational repair organs for the rapid restoration of the standard armament of the chast'.

Experience has shown that any given model of armament may be repaired in various repair time periods. The time required for repair depends on such factors as the technological equipment available, repair documentation on hand, tools and spare parts available, etc. Proper organization of repair (selection of a method, placement of equipment, availability of good repair shop space) is also of considerable significance.

At the present time, most organizational shops use the so-called personalized method of repair. Also, in a number of cases, when different units and sections of a model of armament are interchangeable, the aggregate method is used. We believe that the aggregate method is most effective in repairing radar stations and artillery weapons. We also believe that by using the circulating fund (spare sections, units and aggregates) middle echelon repair of radar stations can be performed in the chast', without removing them to stationary repair organs as has always been done. This will provide a savings of funds currently used for transportation of equipment to the repair location and back and will provide

a considerable gain in time which will doubtless have a positive influence on the combat readiness of chast' and podrazdeleniye.

The performance of field maintenance in organizational shops seems necessary for some particular models of equipment for the additional reason that in modern combat it will not always be possible to send the damaged equipment to the front repair organs.

We have accumulated some experience in performing field maintenance of radar sets. True, this maintenance has been performed using repair teams sent out from the stationary repair organs, which has not always been convenient. Difficulties have been encountered in providing the specialists for these teams, and a great deal of time has been required for performing the repairs (the absence of the required instruments, technical documentation, etc., in the organizational repair areas caused this). We must admit that the productivity of labor in these repair teams separated from their repair organs has been rather low.

Field maintenance of radar sets by the aggregate method in organizational repair shops requires the solution of a number of complex problems by the repair troops. Careful training of specialists and complete development of methodology and the technology of repair, accumulation of the required equipment and checking and measuring apparatus, composition of repair parts sets, etc., all must be performed. Of course, certain organizational problems must also be solved.

Under combat conditions, timely repair of armament depends on capable utilization of mobile repair organs under all conditions. The best school for repair workers is to be found in the field exercises as mobile shops, participation in training drills and practical exercises. During such exercises, the following points should be carefully developed: action of the shop on the march, selection of a location for placement of equipment, norms for setting up and tearing down the shop. The performance of diagnosis of inoperative armament must be studied (as we know, diagnosis has its specific features under field conditions), old methods must be improved and new methods must be developed for repair. It is also important to work out cooperation between shops and production sectors, and to organize mobile teams to be separated from the shop for repair of equipment in podrazdeleniye.

Special attention should be turned to the organization of work concerned with decontamination of material received for repair as well as the study of problems of counter atomic and counter chemical warfare defense by all personnel. Where the enemy uses weapons of mass destruction, it is necessary to select a location for setting up the shop particularly carefully, to carefully camouflage the special equipment and to take measures to protect the repair workers from the weapons and to learn to perform repairs while wearing individual protective equipment.

Unfortunately, cases still occur where some specialists, who are knowledgable and capable of doing good repair work under stationary conditions, lose a great deal of time in the performance of a number of operations, and use their equipment and instruments very uncertainly under field conditions. Thus, on one recent exercise none of the personnel in a shop was able to start the shop generator quickly. And of course we cannot justify the action of one mobile repair shop participating in tactical exercises which performed no repairs, but rather simply sent the defective armament to winter quarters.

Of course, our equipment has become much more complex than that which we used during the Second World War. This fact obligates repair workers to learn how to repair armament in the most difficult situation, capably using the available instruments and tools and creating new devices as required to facilitate and accelerate the repair work. This is a great field of activity for our military rationalizers and inventors. In the Moscow Military Districts, the best of these are Engineer Captain B. RYBALO, Captains of Technical Service V. SHUMAKOV and V. DENISENKO, privates V. Babenko, N. Kabilin and many others.

In order to stimulate the work of organizational shops, each year we perform contests for the rank of best organizational shop in the district. Our experience has shown that these contests aid in considerably improving the quality of repair work of armament. We judge the contest on timeliness and quality of repair, availability of work space and equipment at working locations, the familiarity of the personnel with the technical documentation and their ability to use it, as well as the qualifications of the repair workers, state of inventors and rationalizers work (number of suggestions submitted and adopted). The increase in productivity of labor, savings of material, and quality of armament repaired are taken into consideration. One condition of the contest is the ability to set up a repair shop rapidly and repair armament in the field. In performing the yearly summary checks of combat readiness of the troops, a special commission makes itself acquainted with all aspects of the life and activity of the organizational repair shops and determines the leaders in repair work, who are awarded monetary prizes on the order of the troop commander of the district.

As a result of last years operations, the prize winning shops were those headed by Captains of Technical Service N. VERESHCHAGIN, N. SPIRIDONOV, V. STAROVOYTOV. The personnel of these shops is distinguished by its high discipline. Order is maintained both in the shop and in the barracks. All the repair workers received an overall grade of "good" in combat, political and specialty training in the year-end inspection. The armament repaired by these shops, in addition to its excellent technical condition, has a good external appearance. Rifle stocks are polished, metal parts (where necessary and permissible) are oxide treated. The shop headed by Captain M. SPIRIDONOV has even developed a process for restoring the lacquer coating on metal parts.

Under today's conditions, organizational repair shops must do more than simply repair armament. They must do a great deal of preventative maintenance work in the podrazdeleniye, prevent armament from failing before its service life has expired, and attempt to lengthen the service life of equipment between repairs. The year-end checks showed: in those shops where the repair workers work shoulder to shoulder with the personnel of the line podrazdeleniye, the artillery armament is generally in good technical condition. The experience of the work of Technical Lieutenant Yu. MAZONOV, Guards Technical Lieutenant V. VERESHCHAGIN and many others confirms this. From year to year, the podrazdeleniye which they service receive good grades for the technical condition, maintenance and preservation of armament. Of course, this is primarily due to the good work of the soldiers and officers of the podrazdeleniye where the armament is used, but a considerable portion of the success is due to the repair workers as well.

The quality and timeliness of repair of armament depends to a great extent on the productive qualifications of the personnel of the organizational repair shops. Each repair worker must know the standard armament and methods of its repair perfectly, must be able to read drawings and sketches and work from them easily, must know the repair documentation and

be able to use it. Also, he should maintain his equipment, tools and working location in model order.

The training of highly qualified repair workers is one of the most important sides of the activity of the artillery armament service. Generally, repair masters are trained in central training locations. However, some specialists are clearly in short supply. For example, difficulty is now being encountered in finding enough artillery and small arms specialists for our shops. Therefore, in one teaching center we have organized a special battery where artillery and small arms master repairmen are being trained for the chast' and podrazdeleniye. For this purpose, a special program has been organized and the most highly trained officers of the artillery armament service have been called upon to conduct the lessons. In making up this battery, the civilian specialties of the personnel were taken into consideration. Naturally, a soldier with training as a technician (lathe operator, grinding machine operator) can be expediently assigned to the duty of artillery repair master, since his training will not require too much time.

Master repair workers are also trained directly in the organizational repair shops. Of course, this training is somewhat more difficult at this level. Each shop, as a rule, has personnel of extremely varied specialties. These include small arms repairmen, electronic technicians and electrical equipment repairmen. Therefore, the general disciplines are usually studied at meetings of repair workers, while each man studies his individual specialty independently. We turn a great deal of attention to problems of mastery of related specialties. Each of our repair masters must be able to replace one or two other specialists. For example, electronic technicians are usually able to repair electrical and electromechanical devices, weapons repairmen take up the specialty of welders, etc. Under today's conditions, this is absolutely necessary.

Some repair workers also take up such related specialties as electrician-driver, driver-battery maintenance man, driver-lathe operater. We consider that this combination of specialties is not suitable. In contemporary combat, repair shops will be moved many times, completing long marches,

generally at night. After a march, each driver must work on his vehicle and prepare it for the next march. He must also be provided with time for rest. Under these conditions, the driver will not be able to work in a related specialty. Simply speaking, he will not have enough time.

GRAPHIC NOT REPRODUCIBLE

We also use supernumerary repair workers from line podrazdeleniye for repair work, although we do this only slightly at the present time. Recalling the years of the Second World War, there was hardly a podrazdeleniye, platoon or crew that did not have its own capable hands who saved it from seemingly impossible positions more than once. The officers of the artillery armament service found time to teach these supernumerary repairmen. In interruptions between battles they explained and showed them how to service their equipment and perform preventative maintenance. At the present time, we pay little attention to supernumerary repairmen in the podrazdeleniye. There is still no program for training such specialists and no time is set aside for their indoctrination. Repairmen are trained in each case individually. Generally, the artillery armament chief or the shop chief or podrazdeleniye commander pays little attention to this aspect of his work. We believe that the training of supernumerary repairmen should be organized in all repair podrazdeleniye.

We must also note the increase in qualification of cadre involved in the growth of rated specialists. Unfortunately, in some repair specialties the requirements for rating have not even been worked out; this should be done as quickly as possible. This will doubtless increase the level of training of our repairmen and improve the quality of repair work.

There is no need to prove that maintenance of armament in a high state of combat readiness is not just a task for the repair workers. The podrazdeleniye commanders are primarily responsible for this. Practice has shown that where the responsible people fulfill the requirements of the internal service regulations of the USSR Armed Forces, everything proceeds normally. However, it is high time that we copeo with the situation present in some places, where equipment is regularly inspected,

but defects remain uncorrected.

In analyzing this situation, we have discovered the reason -- some commanders, especially young commanders with insufficient work experience, inspect their armament regularly but unfortunately perform only superficial inspections without noting defects and disruptions in care and maintenance which appear at first to be insignificant. This occurs because they have not accumulated the necessary skills. In order to help these young officers, we have produced and sent out to the units special reminders which state the order of an inspection, rules for checking the technical condition, maintenance and storage of the most common models of armament. The results have been immediate.

Speaking of storage of armament in the units, we must note the significance of pool days. The internal service regulations state that pool days must be performed no less than two times per month. We have succeeded in reaching the point that in many chast' and podrazdeleniye, pool days are held each week. Thus, for example, in the unit where the artillery armament service is headed by Engineer Major N. KOVALENKO, this is done. Naturally, the condition of the equipment has improved markably in this chast'.

Within the confines of a magazine article, we cannot hope to cover all aspects of the life and activity of organizational repair workers. A great deal must still be done to improve their work. For example, problems of the organization and composition of travelling repair teams which will be used to repair armament during battle directly in position must be worked out; universal sets of special tools must be developed for mobile shops. The repair shops are still receiving sets of tools for each type of armament individually. The time has also come to think about the organization of repair of the equipment of the mobile repair shops themselves. Planning forms and documents must be constantly improved. Great attention must be turned to training extended service repair workers, developing annual norms for one repairman as to technical servicing of armament and other problems.

* * *

In *Tekhnika i Vooruzheniye*, No 6, 1966, Hero of the Soviet Union Major Kh. GADEL'SHIN wrote about the necessity of creating a special instruction book for performance of adjustment operations on communications equipment.

We were informed by General Major of the Engineering and Technical Service S. LUZIN that a guide for maintenance of ground communications equipment has recently been published which presents a general order and organization for the performance of adjustment operations.

A bibliography presenting the methods for performing adjustment operations and technical testing of communications equipment is ready for publication. The adjustment operations to be performed are defined concretely for each type of equipment; the instruments and devices necessary for this work are listed. Also, according to an order of the Chief of the Communications Service of the Ministry of Defense, lists of adjustment operations for all types of communications equipment should be made up in each military district, taking into consideration available experience in their usage. Norms for expenditure of materials in usage of communications equipment are being developed. They will be partially published during 1966.

Tekhnika i Vooruzheniye, No 11, 1966, pp. 40-41

AN INHIBITING ADDITIVE

By Engineer Lieutenant Colonel M. LEVITIN

Recently, inhibiting oils and lubricants have begun to be used for protection of the working surfaces of parts in motor vehicle and tractor equipment from corrosion during their usage. Films of these oils have much higher protective properties than dehydrated commercial oil and are more suitable for internal storage than lubricating grease. Also, inhibited oils not only protect the surfaces from contact with moisture and other corrosive materials but also neutralize combustion products which are capable of oxidizing the oil and which condense onto the working surfaces of parts in the process of operation of the equipment.

Investigation and testing of various models of special inhibited oils in the storage of parts under various climatic conditions have shown that the highest protective properties are shown by oil type NG-203B. Its usage has eliminated the necessity of pouring oil into the cylinders of motors and rotating the crankshafts and gear boxes of equipment each three to six months of storage. There is also no need for the annual retreatment of all machines. The storage of the equipment is considerably improved.

However, these inhibited oils are not for operation and must not be left in the machines during usage. Also, they are extremely scarce. The scientific research institutes of the Ministry of Defense, together with the Moscow "Neftegaz" Plant have created a protective inhibitor additive called AKOR-1 (USSR Patent No 162616, 1964*). By using this additive, universal operational and storage oils can be produced.

Comparative testing of standard inhibited oils with an addition of 10% AKOR-1 for dead storage of a large number of motors and transmissions directly in the vehicles, as well as under warehouse storage conditions showed their undoubtable advantages in comparison to standard and special inhibited oils. Thus, during storage using standard oils, corrosion damaged up to 40% of the transmissions; during storage with NG-203B and NG-203V oil, 1.3%; during storage using oils with AKOR-1 additive, no corrosion was found.

These operating and storage oils can be prepared manually or by using mechanized equipment.

If the oil is prepared manually, the additive is added to a measured quantity of commercial oil (10% of the total quantity of oil) heated to 60-70°C. The oil is then mixed intensively until a smooth mixture is produced.

Mechanized equipment such as the AZ-1E oil filler or the type BS-30 or PPS-7500 mixing tanks, the MZ-51 oil filler or the VMZ-157V water-oil

---

* Cf. *Byulleten' Izobreteniy SSSR* [Bulletin of Inventions, USSR] May, 1964, No 10.

filler, are used to prepare large quantities of the mixture. In this case, the AKOR-1 inhibiter need not be heated. In preparing the mixture, one must be certain that all of the measured quantity of additive is actually poured into the oil. In no case can the additive be poured directly into a crankcase or oil tank, since, due to its great adhesion qualities and viscosity, it will generally remain on the walls of the filler throat or crankcase (tank) and will not mix well with the oil.

How should storage of motors and transmissions of motor vehicles be performed using the universal operating and storage oils?

First, the universal oil is used (using approximately 50% of the capacity of the lubricating system) to fill the oil tanks, using ordinary methods; it is placed in the motor crankcase, in the air filter, in the differential, in the transmission case and, on the MAZ-535 and MAZ-537 vehicles, in the hydromechanical transmission tank. Then, the motor is started and allowed to warm up for ten or fifteen minutes, after which first gear is selected and the transmission is rotated for three to five minutes with the driving axles jacked up (track disconnected). After the motor is stopped, the crankcase is filled to the proper level with ordinary oil.

The parts of the intake manifold system, with overhead valves, are freely lubricated with the universal operating and storage oil. The cylinders, fuel pump and regulator of type V-2 motors, as well as the fuel tanks, are treated for storage as called for in the corresponding instructions.

Motor vehicle and tractor equipment removed from storage can be used with the universal operating and storage oil until the first oil change.

If the oil in the motor and transmission is not changed during subsequent usage, during the next preparation of the vehicle for storage, the oil is not removed, but the crankcase is simply topped off with the corresponding type (with 10% additive) up to the normal level.

GRAPHIC NOT REPRODUCIBLE

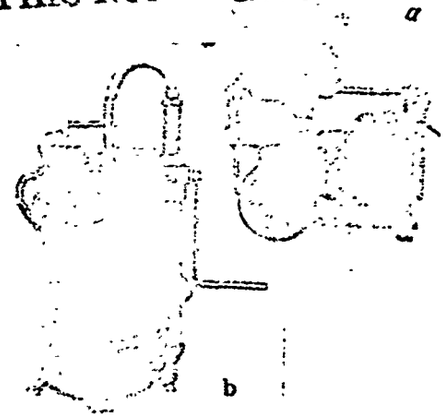

The filler AZ-1-E (a) or the tank mixer BS-30 (b) can be used to mix the operating-storage oil.

The protective inhibiter additive AKOR-1 is an effective means for protection of the working surfaces of motors and transmissions from corrosion. It protects the working surfaces of aggregates, parts and sections from corrosion for two to two and one half years.

Tekhnika i Vooruzheniye, No 11, 1966, p. 41

NEW BOOKS

In 1967, the Publishing House Khimiya *plans to publish a number of works on the subject of protection of metals from corrosion.*

Chemical principles of the technology and application of phosphate lubricants and protective coating. -- a monograph in which not only the theoretical bases of phosphate hardening, but also detailed recommendations on the application of protective coatings, phosphate lubricants and mastics are presented.

It will be interesting for the readers to become acquainted with the guide book written by great German specialists and generalized by many years of engineering experience in studying corrosion processes. This book is called *Corrosion and Protection from Corrosion. Corrosion of Metals in Industry.* In this book, corrosion of various metals and alloys is analyzed, their behavior in various media such as acids, alkalis, the atmosphere, the soils and sea water is characterized. On the basis of a great deal of factual material, the authors analyze the corrosion behavior of materials used in various branches of industry -- the chemical industry, ship building industry, atomic energy industry and others.

In books by M. Gol'dberg and Kh. Chetfild, *Materials for paint and varnish and other polymer coatings* and *Paint and varnish materials and coatings*, the reader will find a description of various materials used for application of protective coatings -- pigments, resins, oil paints, plastifiers and other materials. These books analyze problems of the physical chemistry of paint and varnish materials and coatings and the technology of their application. Considerable attention is given to a description of anti-corrosion paint and varnish coatings.

Tekhnika i Vooruzheniye, No 11, 1966, pp. 42-43

THE THEME: CORROSION

By M. Pavlov, Methodologist and Editor at the VDNKH

The successes of our scientists and specialists seeking effective methods for combating corrosion make up the theme of exhibits, reviews and seminars performed at the Exhibition of Achievements of the National Economy of the USSR; special expositions are also organized there. A number of these events were held in 1966.

We know that corrosion is a dangerous enemy to underground metal structures at hydroelectric stations. The specialists of the Volga Hydroelectric Station Imeni V. I. Lenin, in cooperation with the Baku Institute Gipromorneft' have developed a new method for protecting the structures -- an electrochemical (cathode) method. This protection, in combination with painting of the surfaces with zinc paint or treatment of the surfaces with one of a number of stable coatings (perchlorvinyl or ethanol coatings) allows metal losses from corrosion to be reduced to a minimum or completely eliminated for 15 to 20 years. The expenditures for applying electrochemical protection are amortized in one year. The economic effect of this protection at the Volga Hydroelectric Station Imeni V. I. Lenin alone, according to the calculations of these specialists, is 100,000 rubles.

In our country work has already been begun on the creation of the Pauzhetskaya, Paratunskaya, Makhachkalinskaya and other geothermal electric power stations. As we know, the composition of geothermal waters is characterized by an increased content of dissolved salts. For example, the waters of the Pauzhetskiy deposit contain up to 3500 mg/kg sodium chloride and other mineral salts. Therefore, in constructing new thermal electric stations, a serious problem arises: the selection of metals and development of more suitable methods for protection of these metals from corrosion. Thus, the primary construction material for the Pauchetskaya station will be ordinary carbon steel. The water-steam mixture from the bore hole (at 110°C) is sent to a separation device, where it is divided (at a pressure of 1.5 atm). Since the separator comes in direct contact with the saturated vapor, containing free carbonic acid, hydrogen sulphide and ammonia, the internal surface of the separator must be covered with type OFL-71-7 enamel. Also, neutralizing amine films are used to coat the inside of the tubes. Since oxygen may appear in the final stages of the turbine, which operate under a vacuum during influx of air, small quantities of hydrazine hydrate will be added to the steam sent to the turbine. The internal surface of the condenser is covered with polyisobutylene PSG, the baffles, jets and other parts -- with OFL-71-7 enamel. All parts of the ejector which come in contact with gas or gas condensate are made of stainless austenitic steel.

Of greater practical significance is the technology for rust painting of metal constructions presented at the VDNKH. The essence of this method is that the rust is converted to pigment -- prussian blue -- by treatment with a reducer (a mixture of orthophosphoric acid and yellow potassium ferrocyanide 8:1). Then, the surface is cleaned with a steel or fiber brush to remove the loose pigment. The excess acid is neutralized by

applying F-10 or FL-1 furyl varnish. The surface treated with the reducer and furyl varnish is allowed to stand one day and then painted. The total number of layers of base coat and paint is two or three for pure atmosphere and four or five for contaminated atmospheres. This method is applicable not only for painting for rusty surfaces, but also for protection of metal structures which have been coated with kuzbass varnish, asphalt-bituminous lacquer or No. 177 lacquer.

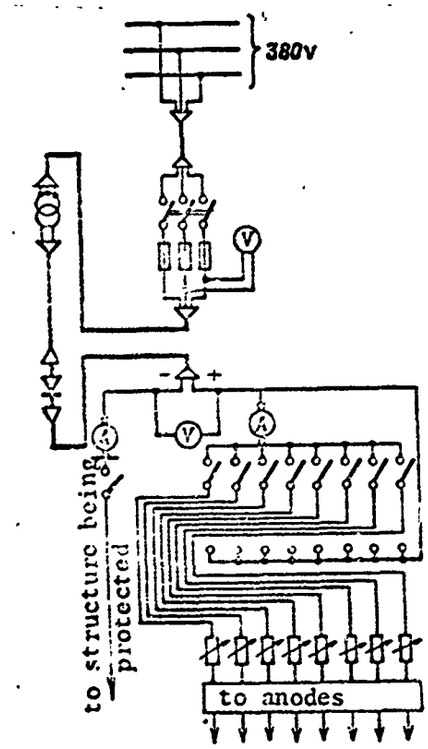

Circuit of electrochemical (cathode) protection of metal structures of river water engineering projects.

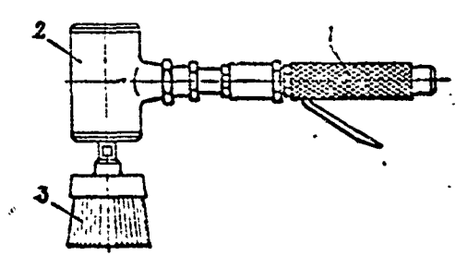

Pneumatic rotor machine for cleaning rust from surfaces of parts: 1, handle; 2, body; 3, brush.

The results of laboratory testing have confirmed the high stability of this treatment and have also shown that the service life of coatings with this new method of surface cleaning is three or four times greater than the service life of coatings applied in the ordinary methods. As a result, the cost of painting is reduced by one and a half to two times,

and metal losses from corrosion are reduced to a minimum.

The Institute of Organic Chemistry of the Academy of Sciences USSR has suggested a paste called cellogel, which can be used to clean a metal surface being prepared for protection from corrosion. It includes hydrochloric acid, which easily dissolves rust. In order to avoid a negative effect of the acid on the metal, formaline, urotropine and certain other materials are added to the paste. The mixture thus formed is thickened with a sodium silicate solution, pulverized paper or sawdust. The cellogel is applied to the surface being cleaned with an ordinary brush. It is allowed to stand for a short period of time, after which the metal surface is treated with a 5 to 10% solution of phosphoric acid. The rust disappears and a thin phosphor film is formed which greatly lengthens the service life of the paint. This paste is easy to make in any enterprise. It can be successfully used for cleaning metal surfaces of any complex shape and any size, from a tractor to a ship. One square meter of surface treated with this paste costs approximately five kopecks, which is several times cheaper than mechanical cleaning of the surface.

The experience of constructors in anti-corrosion protection of metal joints between panels and housing structures is worthy of attention. This is a very important problem, whose solution will guarantee durability of large panel construction. The constructors have begun to use the method of metalization of welded seams successfully. They use mobile installations widely shown at the VDNKH.

Gas flame pulverization of powered protective coatings on metal has begun to be introduced ever more widely. For this, the mobile "UPN-6" aggregate has been created. It allows metal to be covered with a mixture of zinc and aluminum, zinc or polymers. The apparatus weighs 7.8 kg. It operates reliably, is distinguished for its simple design and can be easily assembled in any shop. One man controls this small machine. The cost of protective coatings applied by this method is 40% less than that of coatings applied by electrometalization.

An effective method for anti-corrosion protection has been developed in the laboratory of the Leningrad Plant Imeni Yegorov. The essence of this method is as follows: a part is heated to 350°C and placed in a boiling mass of powered polymer. The polymer particles, densely covering the surface of the part, reliably protect it from corrosion.

The VDNKH provides an ever wider circle of specialists with information concerning all the latest methods for protection of metals available in our national economy. In 1966, a special scientific and technical seminar was dedicated to the prospects for development of the method of enamelization of surfaces of reservoirs and other similar structures. Representatives of the Scientific Research Institute for Construction of Pipelines, UralNiiChermet [The Urals Scientific Research Institute for Ferrous Metallurgy], Lenenergo and other organizations shared their interesting experience in enamelization without baking ovens, using special automatic machines in an electromagnetic field. This method provides a stable and reliable protective coating for metal surfaces.

Special expositions of the work of innovators, rationalizers and inventors have become a tradition at the exhibition. Thus, rationalizers at the Baku Plane Imeni the Paris Commune have created a pneumatic rotating machine for cleaning rust from metal. In contrast to other similar mechanisms, the compressed air is fed directly to the blades of the rotor, which considerably increases the efficiency of the mechanism.

The Novorossisk Ship Repair Plant showed automatic machines for

cleaning and painting ship hulls at the exhibition. These clever mechanisms, created by innovators, perform these labor consuming operations automatically by a fixed program. In one hour, this automatic machine can clean over 100 square meters of surface from rust. It paints ship hulls even more rapidly -- at the rate of 250 m^2 per hour. The process of cleaning and painting is performed without direct control by man. The invention of the Novorossisk Ship Repair Plant workers improves the conditions of labor, increases the productivity of labor and yields savings.

We have presented only a few example, but they show clearly the role of the VDNKH of the USSR in solving the impertant scientific-technical and national economic problem of protection of metals from corrosion.

Tekhnika i Vooruzheniye, No 11, 1966, pp. 44-45

PREPARATION FOR STORAGE

By Engineer Lieutenant Colonel N. KUDRYAVTSEV

The preparation of armament for storage under winter conditions should be begun with a test of the knowledge of the personnel concerning the rules for maintenance of the equipment. Special attention must be given to the specific features of work with cooling fluids, rubber products, cables and hoses, as well as to the safety rules. After being sure that the soldiers and officers are well informed, the quantity of work which must be performed in preparing the armament for usage under winter conditions is determined. Then, seasonal servicing of the armament is begun, including ordinary technical maintenance No 1 or No 2.

Special attention is turned to the presence of all motor heating and starting equipment called for by the tables of organization and equipment. Cooling systems are filled with antifreeze, heating covers are prepared and electrical equipment is tested.

In the summertime, all small arms are generally used with small arms lubricant VO (All Union State Standard 3045-51). It provides failure-free operation of the armament only to a temperature -5°C. In the Winter, liquid small arms lubricant (All Union State Standard 9811-61) must be used, which flows freely from the oiler even at a temperature of -70°C. Flowing over the surfaces of parts and sections, this lubricant covers them with a thin layer providing failure-free operation of the armament and protecting it from corrosion.

In the transition to Winter usage, all old lubricant must be removed. For this, the weapons are completely dissembled and all parts are rubbed dry. Sometimes the summer lubricant remaining in difficultly accessible spots is dissolved in liquid small arms lubricant.

In preparing artillery weapons for Winter, seasonal maintenance must also be performed. The lubricants now used for artillery, GOI-54P, TSIATIM-201 and the oils AU, AGM, GM-50I and USS lubricant may be used year round. Therefore, it is not necessary to change the lubricant during seasonal maintenance, but it should be checked for the presence of water, which can cause early corrosion of parts and lead to stoppages in the operation of mechanisms, or even to their breakage. The oil or lubricant is poured into a test tube or other vessel and heated to a temperature slightly over 100°C. If there is water in the lubricant, sputtering will be heard. Another method is also known. The oil is poured out onto a glass. The water, if there is any water present, will appear as small droplets.

The channels of artillery barrels which are being stored (for no less than 3 months) should be prepared for storage using corrosion inhibited paper. For short term storage under Winter conditions, barrels may be covered with GOI-54P or GOI-54 lubricant. Artillery weapon barrels are generally cleaned using kerosene; mortars and grenade launchers are usually cleaned with liquid small arms lubricant. RCHS solution is not used, since it freezes at -10°C. In order to soften the fouling, the

barrel is first liberally coated with GOI-54P lubricant, then cleaned after two hours. Wheel hubs are usually lubricated with grease. In regions where the temperature may reach below -30°C, it is recommended that type TSIATIM-201 lubricant be used.

It should be noted that if artillery equipment is stored in the open air, it must be cleaned and lubricated after sharp weather changes (after a shower or snowfall).

It is extremely important to organize proper storage of optical gun sights and instruments. Sights should be well covered and stored near the weapons, and optical instruments should be stored in dry unheated areas. It is not recommended that they be stored in heated areas. The sharp temperature drop which occurs when the instruments are carried outside will cause considerable condensation. When this occurs, the driers quickly fail and the air-tight seal is destroyed. Night vision sights should be stored only in warm areas, since the photocathodes rapidly fail in the cold.

Also, a location should be carefully prepared for storage of batteries. They are best stored in a dry room at a temperature not below -5°C and not above +25°C. The density of the electrolite should be increased in correspondence with the instructions.

In using armament mounted on the bodies, frames or cabs of vehicles, they must be periodically checked for moisture, ice or frost on sections, units and parts. If this armament is to be stored in a warm area after having been used in the cold, the air within the cabin must be first dried. For storage in non-heated areas, gun lubricant or GOI-54P is first applied; silica gel in sacks is installed (1 kg per 1 m^3 of volume) then the doors and hatches are closed and sealed with 33 k paste.

The armament thus prepared (mounted in cabins) can be stored for one year, after which technical maintenance No 2 should be performed. The storage life can be increased to two years if dynamic drying methods are used. Two hoses are attached to the body containing the apparatus. Periodically, the moist air is pumped out of one tube, dry air being pumped in the other. This drying method is more economical and effective than the use of silica gel.

Tekhnika i Vooruzheniye, No 11, 1966, p. 45

GLOWING FRONT SIGHT

By Major M. GERMANEK and Major G. MARTEN [East German Army]

During rifle shooting under night conditions, it is difficult to see the slot in the rear sight and the front sight, which makes accurate aiming quite difficult. We have developed a device consisting of an additional front sight with a holder (Figure 1) and an attachment for the rear sight aperture (Figure 2). They are covered with luminous paint. The rear sight aperture and front sight are therefore easy to see at night. The holder, which is applied to the base of the front sight, is held by a spring bracket along which the supplementary front sight moves. In the battle position (Figure 1a) the additional sight is placed over the front sight. Its appearance becomes wider. The aperture in the rear sight is larger than in the ordinary rear sight, which facilitates aiming in darkness.

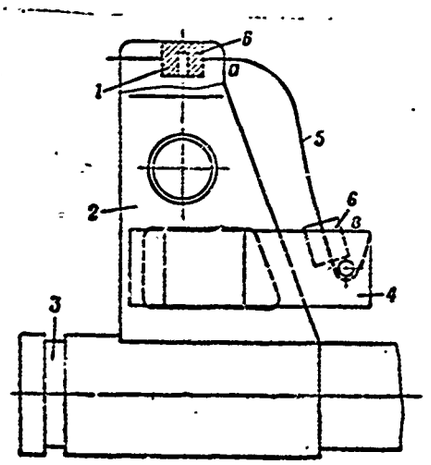

Figure 1. Device for night firing: *1*, automatic weapon front sight; *2*, base of front sight; *3*, muzzle nut (sleeve); *4*, holder; *5*, spring bracket; *6*, additional front sight; *a*, combat position; *b*, travel position.

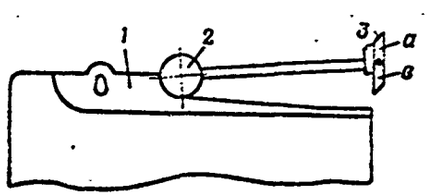

Figure 2. Rear sight with attachment: *1*, sight blade; *2*, rear sight slide; *3*, attachment; *a*, combat position; *b*, travel position.

The device is usually clamped on the weapon and left there since in its travel position (Figure 1b) it does not interfere with shooting under ordinary conditions. The parts covered with the luminous paint should be cleaned of dirt and grease. If they become dirty, they should be cleaned with a clean, soft cloth and water.

Tekhnika i Vooruzheniye, No 11, 1966, pp. 46-48

CHECKING THE CALIBRATION OF THE R-405

By Engineer Lieutenant Colonel A. KUZNETSOV

Periodic testing of such important parameters of the R-405 radio relay station as the error in calibration and setting of transmitter and receiver frequencies allows communications to be conducted without manual tuning of stations and without searching for correspondents.

A new instrument has been manufactured for this purpose -- the heterodyne frequency meter CH4-9. This device can be used in mobile shops (when stopped) in repair bases, warehouses, laboratories and plant shops. With an ambient air temperature of about +25°C and relative humidity up to 90%, the instrument provides for measurement of frequencies with an error of no more than $\pm 5 \cdot 10^{-6}$. Power supply for the apparatus comes from a 220 v ±10%, 50±0.5 hz AC line.

Before measuring the error in calibration and setting the frequency, the transmitter and receiver are allowed to warm up in the operational mode for 3-4 hours with the nominal value of voltage set in the primary power supplies (AC 220 v power or 12 v battery at full load). In this process, the transmitter is loaded with an equivalent of the antenna in the frequency range to be measured, and the AFC in the receiver is turned off.

Before measuring, the frequency of the master oscillator in the transmitter and the first heterodyne in the receiver are corrected using the station's quartz calibrator. Then, the telephone channels are connected in the "4TG" mode, and the telegraph channels are disconnected.

The frequency meter is installed on the right or left locker, near the high frequency units. When the receiver is being tested, its input is connected with the "input-output" terminals of the frequency meter using the coaxial cable supplied with the frequency meter. When the transmitter is being tested, it is sufficient to connect the rod antenna of the frequency meter to the "input-output" terminals.

The error in calibration and the setting of the frequency of transmitter and receiver are checked at any fixed frequencies approximately identically distant from each other. The frequency meter is used to determine the true frequency of the transmitter f_t and the first heterodyne of the receiver f_{1h} with an accuracy to tenths of a kilocycle, equal to two scale indications of the frequency meter.

The error in calibration and setting of transmitter frequencies in kilocycles is calculated from the formula:

$$\Delta f_{tr} = f_t - f_n,$$

where $f_n = t_{n21} + \Delta f\ (N-21)$ is the nominal frequency of the transmitter at fixed frequency N in KHz; f_{n21} is the nominal frequency of the transmitter

on the 21st fixed frequency in KHz; Δf is the spacing between fixed frequencies in KHz. In the R-401 and R-403 radio relay stations, the nominal transmitter frequency in kilocycles at fixed frequency N is determined from the formula:

$$f_n = f_{n1} + \Delta f\ (N-1),$$

where f_{n1} is the nominal transmitter frequency at the first fixed frequency in KHz; Δf is the separation between fixed frequencies in KHz.

The error in calibration and setting of the receiver frequency in KHz is determined from the formula:

$$\Delta f_{rh} = f_{th} - f_{nh},$$

where $f_{nh} = f_{nh21} + \Delta f\ (N-21)$ is the nominal frequency of the first heterodyne of the receiver at fixed frequency N in KHz; f_{nh21} is the nominal frequency of the first heterodyne of the receiver at the 21st fixed frequency, in KHz; Δf is the separation between fixed frequencies in KHz. In radio relay stations R-401 and R-403, the nominal frequency of the first heterodyne in the receiver at fixed frequency N, in kilocycles, is determined from the following formula:

$$f_{nh} = f_{nh1} + \Delta f(N-1),$$

where Δf_{nh1} is the nominal frequency of the first heterodyne of the receiver at the first fixed frequency in KHz; Δf is the separation between fixed frequencies in KHz. With an ambient air temperature of 25° ± 5°C, the error in calibration and setting of any fixed frequency of transmitter and first heterodyne of receiver should not exceed ±7 KHz. If this condition is not observed, the transmitter and receiver will require capital repair.

The error in calibration and setting of the transmitter and receiver frequencies in the decimeter wave band can be measured after the station has warmed up in the operating mode for 3-4 hours with nominal power supply voltage (220 v AC line or 12 v full load battery). During this period, the transmitter should be loaded with a type E9-1 (UEA-5) antenna equivalent, and the AFC of the receiver should be turned off. It should be kept in mind that the high frequency contacts at both ends of the type RK-75-9-13 (RK-103) cable of the E9-1 antenna equivalent are conical, similar to the contacts of the RK-75-4-11 (RK-101) cable in the meter wave length, whereas all the high frequency contacts of the station in the decimeter wave band are cylindrical. Therefore, in order to provide reliable contacts when connecting the E9-1 antenna equivalent cable to the high frequency contact points of the station in the decimeter wave band, an internal cylindrical contact hole should be drilled within one of the female conical contacts to a diameter of 18+0.05 mm clear to the depth of the side wall, or type YEK3 640 013 and YEK3 640 014 adapters should be used. Before beginning measurement, the frequency of the master oscillator of the transmitter and the driver of the first heterodyne of the receiver are adjusted according to the stations quartz calibrator. The separation of fixed frequencies of the transmitter and receiver (and their ECHR) should be equal to 50 during measurements.

The error in calibration and setting of frequencies of transmitter and receiver can be measured at any fixed frequencies approximately identically separated from each other.

The frequency meter is used to determine the true frequency of the

transmitter f_t and the first heterodyne of the receiver f_{th} with an accuracy to a few tenths of one kilocycle, which is equal to the indications of the frequency meter scale multiplied by 12.

During the process of measuring the error in calibration of the transmitter, the CH4-9 heterodyne frequency meter is set in the right or left cabinet, near the high frequency unit. The rod antenna is connected to its "input-output" terminal. The E9-1 transmitter antenna equivalent is set at a distance of 10-20 cm from the rod antenna of the heterodyne frequency meter so that when the HF oscillator is tuned the "rumble" (beating of the 12th harmonic of the HF oscillator in the frequency meter and the transmitter frequency) is easily heard in the frequency meter phones. When the frequency is determined with a marker oscillator, it should be tuned with the right hand dial for the maximum loudness of this "rumble".

The error in calibration and installation of the transmitter frequency, in kilocycles, is determined from the formula:

$$\Delta f_t = f_i - f_n,$$

where $f_n = f_{n1} + \Delta f(N-1)$ is the nominal frequency of the transmitter at fixed frequency N in KHz; f_{n1} is the nominal frequency of the transmitter at the first fixed frequency in KHz; Δf is the separation of the fixed frequencies in KHz.

In measuring the error in calibration of a receiver, the cable connecting the high frequency terminals "VYKH PER" and VKH ECHR" are disconnected and one end of the cable is connected to the high frequency "ANT" terminal to the left of the rack. The other end of this is connected through a "jack to jack" junction supplied with this station to the cable connected to the "input-output" terminal of the heterodyne frequency meter CH4-9. The output of the transmitter (high frequency terminal marked "VYKH PER", located behind the rack) is loaded to the antenna equivalent E9-1 using a cable type RK-75-9-13, being sure that the internal conductor is reliably connected.

The error in calibration and setting of the receiver frequencies (in KHz) is determined from the formula:

$$\Delta f_{rh} = f_{th} - f_{nh},$$

where $f_{nh} = f_{nh1} + \Delta f(N-1)$ is the nominal frequency of the first heterodyne of the receiver at fixed frequency N in KHz; f_{nh1} is the nominal frequency of the first heterodyne of the receiver at the first fixed frequency in KHz; Δf is the separation of the fixed frequencies in KHz.

With an ambient air temperature of 25°±5°C, the error in calibration and setting of any fixed frequency of the receiver and transmitter in the decimeter wave band should not exceed ±35 KHz. Otherwise, the receiver and transmitter should be sent for capital repair.

Fixed Frequency Number	Nominal Frequency Transmitter	Nominal Frequency Receiver	Nominal Frequency Receiver Heterodyne	Nominal Frequency Frequency Meter
.	.	.	.	.
.	.	.	.	.

Testing for errors in calibration and setting of transmitter and receiver frequencies can be performed rather rapidly, if the fixed frequencies at which it is to be performed are selected in advance. These fixed frequencies should be selected using the nominal frequency formulas for transmitter and receiver and the nominal indications of the heterodyne frequency meter scale, which, in the meter band, are equal to the nominal frequency divided by 2, and in the decimeter band are equal to the nominal frequency divided by 12. The data for calculation are presented in a table for convenience in usage.

Tekhnika i Vooruzheniye, No 11, 1966, p. 48

FOR YOUR NOTEBOOK -- SYMBOLS USED WITH SEMICONDUCTOR DEVICES MANUFACTURED BEFORE 1964 (All-Union State Standard GOST 5461-56)

Group of Devices	Elements in Symbol					Examples
	First	Second			Third	
		Germanium	Silicon	Purpose, Characteristics		
Diodes	D	9-100[1]	101-200	Point	Letter indicating type of device depending on parameters (see handbooks)	D9A-D106A
		301-400	201-300	Junction		D302,D211
		401-500	-	Mixer		
		-	501-600	Multiplier		
		601-700	-	Video Detector		
		701-749	750-800	Parametric		
		-	801-900	Stabilitron		D815A
		-	901-950	Varicaps		D901YE
		951-1000	-	Tunnel		
		-	1001-1100	Rectifier stacks		D1004
Transistors	P	8-100[2]	101-200	Low power lf		P16B,P106
		201-300	301-400	High power lf		P203,P304
		401-500	501-600	Low power hf		P403A,P505A
		601-700	701-800	High power hf		P609A,P702A

Notes:

1 The numbers 1-8 are used for both junction (for example, D7A-D7ZH) and point (D2A-D2ZH) germanium diodes and detectors.

2 The numbers 1-7 are used for various germanium low power and high power (for example, P4A), point and junction transistors manufactured before 1957.

Tekhnika i Vooruzheniye, No 11, 1966, pp. 49-52

THE MOBILE SHOP

By Engineer Colonel P. ANLPATOV,
Engineer Major V. LEBEDEV

The model MRS-AT repair and metal working shop is designed for performance of mounting and dismounting and mechanical work in the repair of motor vehicles, tracked vehicles and transporters under field conditions (Figure 1). This equipment allows welding, copper and tinsmith and painting work, simple repair of power supplies and electrical equipment, repair and charging of batteries to be performed. It is important to note that this repair shop can be used independently or in combination to make up the PARM-1M and PARM-3M shop complexes. The MRS-AT in essence has replaced such shops as the electric and carburator shop, the milling and metal working shop and the specialized tracked vehicle shop.

The equipment of the MRS-AT is placed in a KM66 metal bodied van, which is heated by a type 030 heater using liquid fuel, as well as by the cooling system of the truck. In the near future, this heating system will be replaced by the OVU06 heating and ventilating installation, which is more powerful. It can burn both liquid and solid fuel.

GRAPHIC NOT REPRODUCIBLE

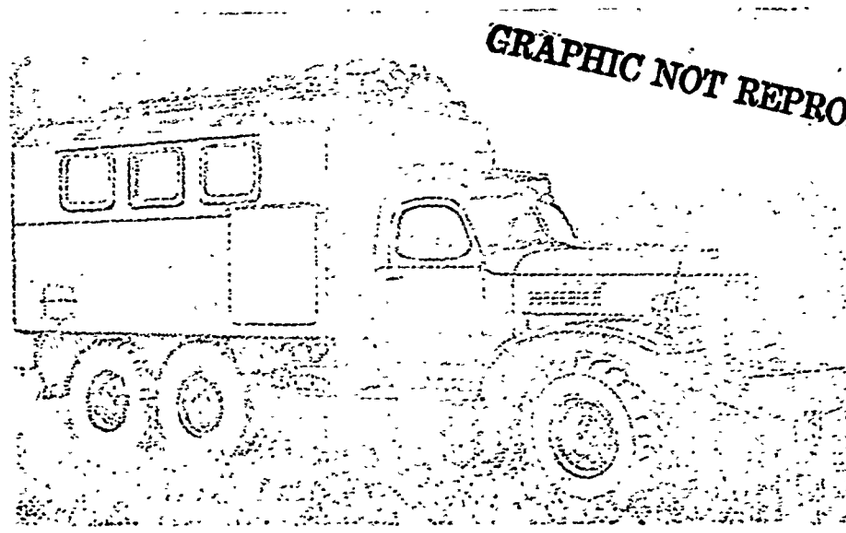

Figure 1. MRS-AT repair and metal working shop.

The shop van contains three work benches (Figure 2): the left work bench *24* for the metal worker, the right work bench *7* and front work bench *4* for specialists on power supplies and electrical equipment. During movement, the personnel sit on two seats. They can rest on the work benches, in two hammocks and on a portable table.

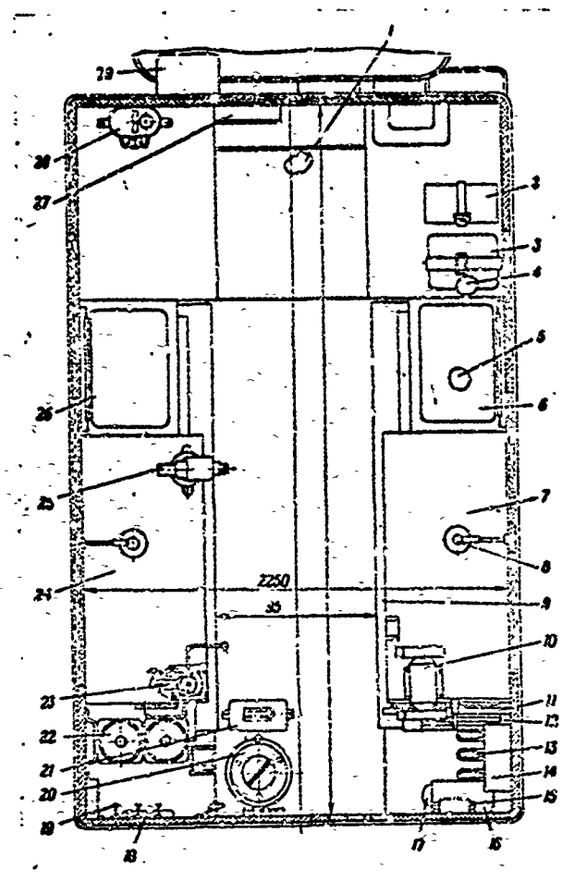

Figure 2. Plan of location of equipment in van: *1*, electric power installation; *2*, field radiometer - roentgen meter; *3*, universal instrument for testing electrical equipment; *4*, *7*, *24*, benches; *5*, current frequency converter; *6*,*26*, seats; *8*, lamp; *9*, box for leaf and coil springs; *10*, electric grinder; *11*, portable table; *12*, folding table; *13*, weapons rack; *14*, panel; *15*, first aid box; *16*, selenium rectifier; *17*, fire extinguisher; *18*, line for measuring front wheel alignment;*19*, hanging hook; *20*, acetylene gas producer; *21*, carbide storage case; *22*, oxygen cylinder; *23*, S-521 electric welder; *25*, vise;*27*, document case; *28*, water tank; *29*, fan.

Electric power is supplied from an internal generator driven by the truck motor or from an external power source. Control of the operation and testing of the electric power installation is performed using a special panel on which a voltmeter, ammeter, switch between generator and external source, excitation button and voltage controlling rheostat are located.

The van is illuminated inside by six overhead lights, two local lamps and an overhead light discipline lamp (12 v). When the van door is opened, the overhead lights go out and the light discipline lamp comes on. The tent is illuminated by ordinary lights. In the future, it has been suggested that a more powerful generator be installed.

A boom crane is used for loading and unloading of equipment and installation and removal of the shop equipment. It is driven from the truck winch and installed in its working position on the forward portion of the truck frame. It is transported on the roof of the van. Devices

to limit the weight lifted and the height to which the hook is lifted are connected into the ignition system of the truck motor, to provide safety in work.

The set of removers and associated equipment are used in repairing both new and old types of motor vehicles. The individual removers in the set are universal. The electric powered tools (impact wrench, two welders, grinding machine) operate on three-phase 200 cycle 36 v power. The electric impact wrench is used for removal and tightening of nuts and bolts with threads up to 16 mm. The S-531 electric welder, fastened in a mount, is used as a semi-stationary welding machine. The electric grinder, in addition to its main purpose, is used for polishing tools. For this, it is placed into the vise using a special holder.

The portable universal ignition system tester, the volt-ammeter, loading plug, areometer and set of electricians' tools are designed for repair and servicing of electrical equipment.

Fuel systems can be tested using a special stand for checking pumps and jets, devices for checking the fuel level in the float chamber of a carborator, a set of devices for checking and repair of motor power supplies type YAAZ-204 and the corresponding set of tools.

It has been proposed that the acetylene welding generator AFM-1-58 be replaced by the PSO-125 welding transformer, with a wide range of current selection. It allows welding (with electrodes up to 4 mm thick) and cutting steel parts 14 to 18 mm thick. The charging-discharging device (ZRU) included in the PSO-125 allows batteries of 6, 12 and 24 v to be charged. When the welder is not in operation, the ZRU can be connected to any DC power supply.

The compression meter, stethoscope, devices for checking wheel alignment and steering, and various measuring instruments are all used during checks of the technical condition of vehicles.

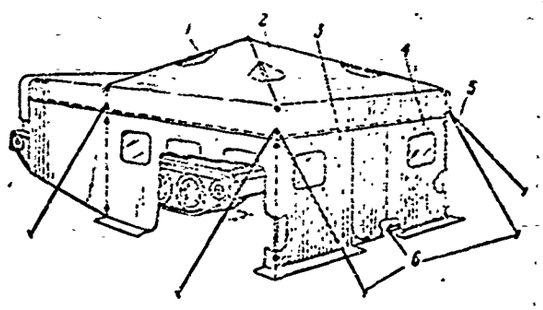

Figure 3. P20 tent: *1*, body: *2*, *3*, and *4*, upper, lower left and lower right sheets; *5*, tension lines; *6*, pegs.

The shop is equipped with equipment, devices and tools for lubricating and fueling, copper and tin working, carpentry and upholsterers work, as well as repair of motor vehicle tires. The medicine chest containing epoxy resins is designed for repair of cracks and holes in blocks, crank cases and hoses.

Due to a reduction in weight of the primary equipment in the shop, an additional set of equipment, tools and devices for repair of tracked vehicles has been included. This set consists of the removers and devices for assembly-dissembly and checking-adjustment operations, servicing and

regulation of devices in the power supply system, plus various special tools.

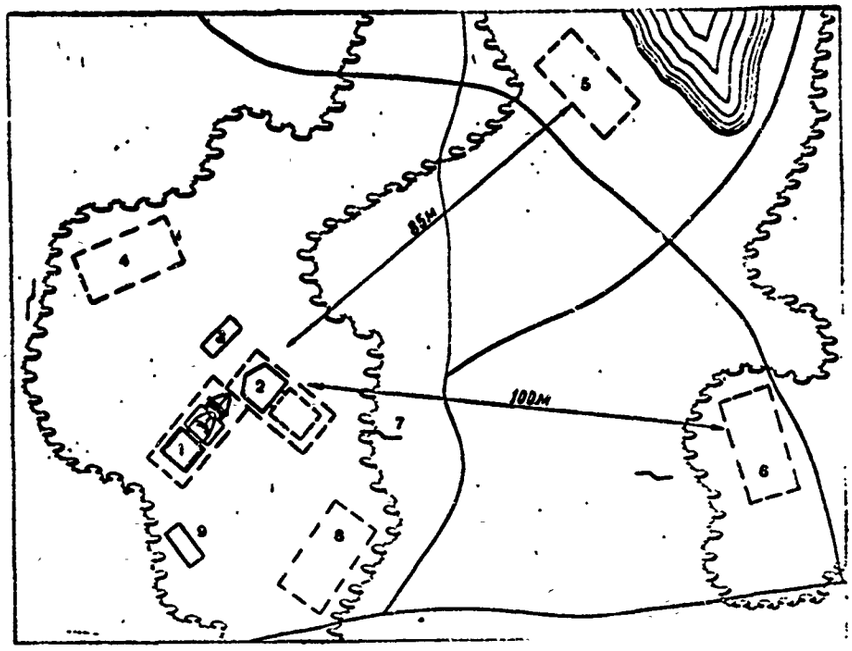

Figure 4. Plan of deployment of MRS-AT in the field: *1*, repair and metal working shop; *2*, tent; *3*, welding point; *4*, *5*, *6* and *8*, locations of vehicle repair, washing and special treatment, dosimetric checking and technical servicing, respectively; *7*, slit trench; *9*, battery charging point.

Vehicles being repaired and repair equipment can be covered in bad weather using the P20 (or P29) tent, which weighs 195 kg (Figure 3). The interior of the tent is heated by the OVU1 heater, which burns liquid fuel. For transportation, the tarpaulin and body are fastened to the roof of the shop van, the heater being placed in a special compartment in the roof of the cabin.

Depending on the concrete tasks and the situation, the shop is deployed completely or partially. For long term operations in one location, it is deployed completely and camouflaged with a camouflage net. If necessary, cover is provided for the materiel and personnel, the boom crane, tent and removable equipment are set up, the cable network is installed and the areas for washing, special processing and dosimetric checking or deployed. An approximate diagram of deployment of the shop is shown on Figure 4.

In the process of usage of the MRS-AT, safety rules must be strictly observed in order to avoid damage to materiel and accidents. For example, the high toxicity of exhaust gases, especially when the shop is operating under cover, requires additional hosing to be attached to vehicle exhaust pipes. Before lighting the heaters, the area to be heated must be blown through with a fan in order to avoid any possibility of explosion. The van must not be washed with solvents, and ice may not be removed from it with an open flame.

Doubtless, as the shop is used the specialists using it will have a number of suggestions for its further improvement. We would like for these suggestions to be published on the pages of this journal.

Tekhnika i Vooruzheniye, No 11, 1966, pp. 52-53

CHECKING BALANCING

By L. Novitskiy, Candidate of Technical Sciences

Unbalancing -- the displacement of individual optical parts -- arises due to improper utilization of optical devices. The reason for this defect may be bending of an instrument due to insufficient strength of individual parts, improper transportation or overheating.

In most designs of modern rangefinders, constructed according to the coincidence system, bending of the telescope tube will not cause any error in measurement. However, displacement or improper initial installation of the end reflector may cause essential unbalancing as to height, and a change in their reflecting angle can cause errors in range.

The balancing of rangefinders can be performed in military units using an easily made and simple measuring installation (Figure 1) which consists of a system made up of flat optical parts (two pentaprisms *P* and two wedge shaped plates *K*). This device allows a rangefinder to be tested by a monocular method with an angle of position of 0 to 90°. The error inherent in the instrument does not exceed ±0.5 t. o. [Theoretical error].

The measuring device (II) and the rangefinder being tested (I) are mounted on a common wooden frame *1* such that the input windows are located opposite each other and the optical axes are in a common plane. This frame is installed on rotation axis *2*, firmly fixed in two massive stands *3*. A scale is entered on the axle, and an index for reading off the rotation angle is entered on the frame pivot *4*.

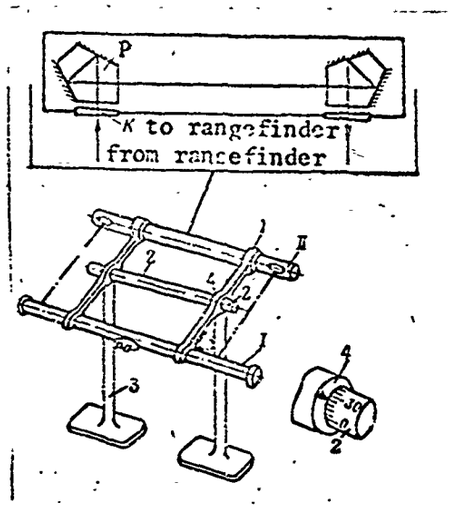

Figure 1. Plan of measuring installation.

An illuminating lamp and holder are applied to the left ocular of

the rangefinder. A supplementary magnification tube is attached to the right ocular and fixed unmoving during measurement.

The installation works as follows: the rangefinder being tested and the measuring installation are placed in the horizontal plane so that their sighting axes are parallel. In this case the image of the left stereoscopic mark of the rangefinder, illuminated by the low voltage incandescent lamp, is projected into the measuring installation. The end reflectors transfer the image into the plane of the right stereoscopic mark.

The direct image of the right mark and the reflected image of the left mark are viewed with a supplementary telescopic system such as a four power dioptric tube. The rangefinding mechanism is used to bring the left and right marks together (Figure 2a). Then, the rangefinder and measuring device are rotated about their common horizontal axes by some angle and the divergence of the marks is noted (Figure 2b). This divergence is eliminated by rotation of the adjustment wedge and its value is read off from the scale. The numerical value of the rotation angle of the wedge, expressed in the theoretical errors (t.o.) determines the amount of unbalance of the rangefinder being tested.

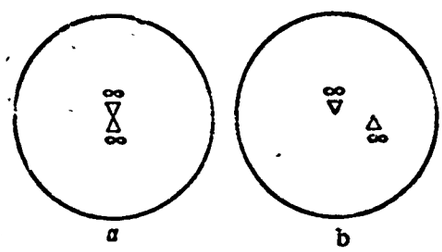

Figure 2. Alignment marks: *a*, matched; *b*, with divergence.

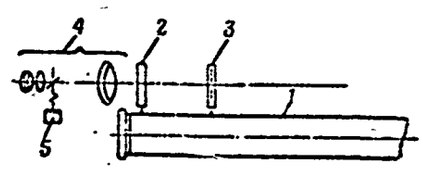

Figure 3. Plan of installation for determination of magnitude of bending of rangefinder.

The rangefinder should be balanced at angles of 0, 30, 60 and 90°.

Unbalance in height of long base rangefinders can be caused by bending of the end caps. A convenient and simple method for determining the bend in any section along the length of the rangefinder is as follows (Figure 3): plain parallel plate *2* and first surface mirror *3* are installed on the external surface of the rangefinder *1*. Autocollimation viewing tube *4* with micrometer eyepiece *5* is placed before them. While various target sighting angles are set on the rangefinder, the divergence of the autocollimation images caused by bending of the rangefinder is noted. Angle of inclination α is determined from the formula

$$\alpha = \frac{a_\alpha}{f},$$

where a_α is the divergence of the autocollimation images of the object in the focal plane of the viewing tube; f is the focal length of the viewing tube.

By constructing a curve of inclination angles versus rangefinder length, it is possible to find the bend. Measurement should be performed by two instrument technicians, and no less than ten readings should be made in each series. A suitable viewing tube for this work might be an autocollimeter with focal length f equal 1200 mm (micrometer eyepiece with scale divisions $5 \cdot 10^{-3}$ mm). No additional equipment is required.

Tekhnika i Vooruzheniye, No 11, 1966, pp. 54-55

DRIVING ON SLIPPERY ROADS

By Reserve Engineer Colonel M. PARSHIN

For many years, the motor vehicle transportation laboratory of the Scientific Research Institute of Motor Vehicle Transportation has been measuring the coefficient of friction between tires and road surfaces using the type NIIAT-BD8 dynamometer mounted on the GAZ-704 two-wheeled trailer, towed by a UAZ-450 vehicle. It has been established that the minimum permissible coefficient of friction, from the standpoint of safety, is 0.4. Accidents occur more frequently on roads with lower coefficients of friction. The stopping distance on such roads is considerably greater and an attempt to stop often results in a skid. This occurred during an investigation of the road between Moscow and Ryazan', where nine of eleven sectors tested were found to be unsuitable (friction coefficient 0.3 or even less). On the road between Moscow and Leningrad, six of ten sectors tested were found to be unsuitable, and on the road between Moscow and Kharkov -- nine of twelve were unsuitable.

This sort of thing occurs even in newly paved road sectors, for example on kilometers 43 to 48 of the road between Moscow and Minsk. One month after this sector was opened, many automobiles skidded after a rain shower. Testing showed that the coefficient of friction of the pavement was only 0.2, i.e., was as bad as ice.

Recently, work has been begun on the application of rough surface layers over automobile roads. Unfortunately, however, work is not always done in the best sequence. Often the slippery and dangerous places remain unimproved and are the primary factors in motor vehicle accidents.

Textbooks and programs for training drivers pay very little attention to problems of driving a motor vehicle on roads with slippery pavement.

It must be remembered that the vehicle will slip the most on road sectors where the driver must change his driving style (shift gears, apply brakes, accelerate). As a rule, this is done at crossroads, on turns, before hills and valleys, with limited visibility, at mass transit stops and in places where the pavement is covered with oil (POL dumps, filling stations), where highways cross dirt roads, in low areas, before bridges, etc.

How should a vehicle be driven through these road sectors? The driver should start up from a standing stop in second gear, easily, at low motor rpm, the clutch should be engaged smoothly and the gas should be applied gradually. Acceleration should be performed smoothly, increasing the motor speed so as not to cause wheel spin. Driving speed should be adjusted for complete safety, observing a following distance approximately twice as great as when moving on dry roads (Figure 1). Short hills should be taken while accelerating, and on long hills the proper gear should be selected in plenty of time.

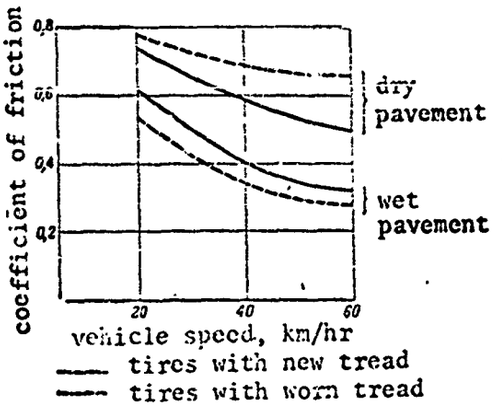

Figure 1.

Due to the redistribution of weight, incomplete loading of the vehicle, and change in tire condition, friction between wheels and road is reduced and the stopping distance required is therefore increased. One must not forget that when moving at high speeds on slippery roads it is not only dangerous to brake or turn the wheel, but also to depress the clutch. Braking should be done with the clutch fully engaged. It is recommended that the motor and brakes both be used for deceleration. It is not a good idea to use central transmission brakes on a slippery road, since this may cause the vehicle to skid.

It is very important to maintain normal pressure in vehicle tires (Figure 2). Tires with increased pressure, naturally, have a smaller contact patch on the road. During sharp braking, the coefficient of friction between the tire and the road will be reduced more rapidly than the other tires with normal pressure, and the stability of the vehicle will be disrupted. Carefully adjusted brakes will provide simultaneous braking of all wheels. Failure to observe this requirement under bad road conditions may also cause the vehicle to skid or tip over.

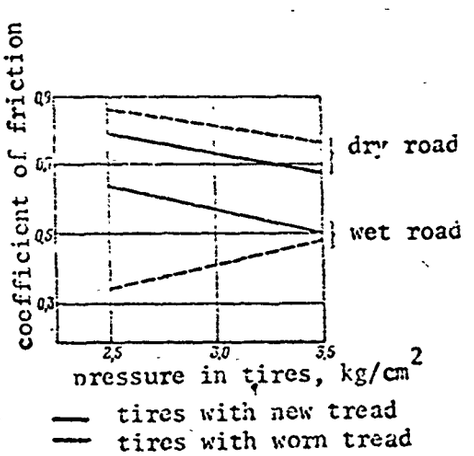

Figure 2.

Experience and investigations both show that any braking on a slippery road should be performed by rapidly pumping the brakes making it possible to use the friction between tire and pavement to the maximum. When the brakes are pumped (up to the point of complete stoppage of the wheels) the tires are highly deformed, so that they

absorb and radiate as heat a large quality of energy, which acts as a supplementary braking device, considerably increasing the coefficient of friction. According to foreign data, some types of tires show an increase in coefficient of friction by 50% and more when brakes are pumped.

The most effective friction between tire and pavement is created when the wheel being braked is still rotating. Locked wheels have a coefficient of friction 30% lower than non-locked wheels. Correspondingly, the braking distance with wheels locked is increased by 20 to 25%.

When driving on slippery roads, particular care and attentiveness are required of the driver. The ability to clearly evaluate the situation and take the proper steps in driving will allow not only avoidance of accidents, but also increased driving speed of combat and transport vehicles.

Tekhnika i Vooruzheniye, No 11, 1966, pp. 56-57

WITHOUT ACCIDENTS OR BREAKDOWNS

By O. Gorov, F. Levshin

In the podrazdeleniye where the technical supply officer is Captain A. POPOV, the men have long forgotten what a motor vehicle accident is. And this has been achieved under conditions in which their tractor equipment is quite intensively used. In this unit, both vehicle columns and single trips are made, where the drivers, in essence, are separated from the podrazdeleniye, must depend on themselves and make their own decisions, often in very difficult driving conditions. It is not enough simply to be able to drive a vehicle without breaking the traffic regulations. It is also important to perform your mission precisely and on time.

Here, the tractor equipment is maintained strictly in accordance with the requirements of the regulations and instructions; military discipline is at a high level. This is to the credit of the officers, the party and Komsomol organizations. Take, for example, the company commanded by Major S. PALIY. In the last month and a half alone, the drivers have travelled over 65,000 km, transporting 9,000 tons of cargo, without an accident or breakdown. About 4000 liters of gasoline have been saved during this period as well. After summing up one stage of the socialist competition in honor of the 50th Anniversary of Soviet power, the personnel of this company was awarded the travelling Red Banner.

GRAPHIC NOT REPRODUCIBLE

Each morning before going out on their trips, the drivers of this company meet for instructions [2]. A special room has been set aside for this purpose. All the necessary equipment is present: safety posters, models of road signs, march route maps, lists of the main requirements and points from the instructions, containing the rules for usage of the tractor equipment and measures to be taken to prevent motor vehicle accidents, etc. Also, the duties of the senior vehicle and driver are on display, diagrams of uncontrolled crossroads and models of motor vehicles are available. In short, everything required is present so that the commander of the podrazdeleniye can instruct his drivers and senior vehicles. He notices the appearance of the troops, and sees that all documents are properly filled out, that each man knows his job, the march route and its specific features. The drivers must solve complex problems on the traffic regulations. When you are behind the wheel, there is little time for thought, and sometimes no time at all. This is why these instruction sessions so carefully discuss, for example, all possible cases of encounters at uncontrolled crossroads, i.e., the most common situation with which a driver must cope in his work.

GRAPHIC NOT REPRODUCIBLE

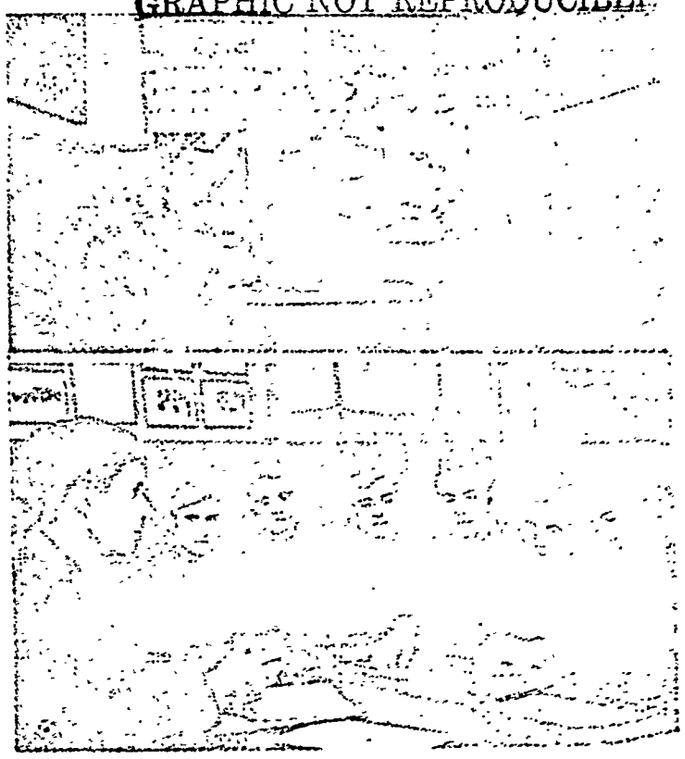

The initiative of the Komsomol members of another company, which is commanded by Captain V. ZHARKOV, is of interest. At the decision of the Komsomol organization, a surprise team has been created, which checks vehicles before they leave the motor pool [5]. For the past two years, this team has been lead by outstanding driver private first class N. Tishchenko. The other members of the team are privates A. Lidnechenko and V. Mel'kovskiy. The drivers know that nothing will escape the eye of the Komsomol checkers. But the team of N. Tishchenko not only checks, but also helps, particularly the young drivers, in finding and eliminating defects, and performing technical servicing of their vehicles.

The chief of the technical service point, extended service Sergeant N. Pershin is an old trooper, a veteran of the Second World War

and a specialist first class. His authority among the young troops is great. He gives them his rich experience each day, teaching them to service their equipment properly. He can always find an example from his personal experience to make any point, and the soldiers listen with great interest to his descriptions of his experiences during the war. In checking the quality of technical servicing performed by a driver, Pershin immediately and clearly explains the possible results of the smallest careless move, even one which seems at first glance to be an insignificant failure to meet the requirements of the regulations and instructions.

GRAPHIC NOT REPRODUCIBLE

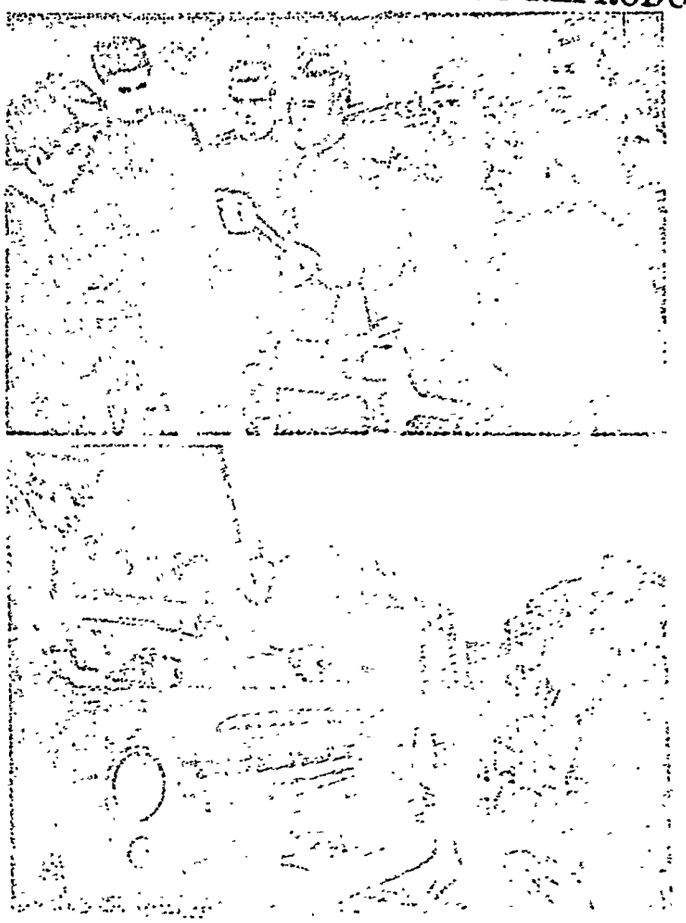

The personnel makes timely and detailed study of new types of vehicles arriving for usage as well as the specific features of their maintenance and driving. The new equipment is studied by every one -- from the soldiers to the commanders of all ranks [1]. Lessons designed to increase the qualification of drivers are performed by platoon commanders [3] and tractor service specialists. Technical training classes have been set up in the podrazdeleniye, as well as classes on driving safety. These classrooms are equipped with visual aids, and cutaway models of mechanical units for training [4]. Officers V. PCHELINTSEV, V. YAKOVENKO and S. BONDARCHUK, as well as extended service troops N. Pershin, L. Morozov and V. Ivanov and many others are rightfully called disseminators of technical knowledge, experts on tractor equipment. The podrazdeleniye has many otlichniks*. They include senior Sergeant A. Nesterenko, privates first class A. Masalitin,

* Otlichnik -- one who has been rated outstanding in combat and political training.

V. Zaubroy, S. Klimenko and N. Tishchenko, private V. Drizhenko and many others.

Serious attention is given to the operation of the technical control point. The chief of the technical control point is extended service Sergeant V. Ivanov. His sharp eye catches the slightest defect or improper point. His demanding nature has earned the respect of all the drivers. The troops come to him eagerly for advice and always find him to be a responsive commander and teacher.

After a vehicle has been tested by the chief of the technical control point, the motor pool duty officer gives permission for the trip to be made. As we approached, extended service Sergeant V. Kostyuchenko was giving some last minute advice to driver private Yu. Puzikov. The duty sergeant warned him that many students were on the street and that special care would therefore be required. "Have a good trip!" Kostyuchenko said to the driver. We agreed completely with this wish. We wished a good trip to all of the drivers of the podrazdeleniye, who are performing their service with honor, utilizing the equipment which their country has entrusted to them without accidents or breakdowns and without collisions.

Tekhnika i Vooruzheniye, No. 11, 1966, pp. 58-69

CONTROLLED THERMONUCLEAR REACTIONS

by S. Luk'yanov, Doctor of Physical-Mathematical Sciences, Professor, Lenin and State Prize Winner

For twenty years now the question of the possibility of bringing about controlled nuclear fusion has continued to attract the most intense interest on the part of physicists in all of the leading industrial nations in the world. Whenever we reflect on the prospects mankind has for making technical progress the problem of controlled thermonuclear reactions is one of those in the forefront. So, it was no accident that this problem was called one of the few most important scientific tasks of the future in the Directives of the XXIIId Congress of the KPSS.

Yet research in the field of controlled fusion is very expensive, engaging many qualified physicists who are conducting the most complex of experiments. The time when the search will end is still not clear. The economic possibilities are debatable. It is only natural that several questions should rise immediately. Is the work which is being done necessary? Would it not be better to direct the bulk of human energy, inventiveness, and talent, into another field? Would it not be better to design new, more modern electronic machines which are so necessary as a result of the headlong progress made in automatic control? Perhaps we should devote our efforts to solving the burning problems of molecular biology or medicine? But are there not other, equally important questions, for example, in which the chief difficulty of the problem of controlled fusion is that the path which must be travelled is so long, the answers to which as a result of the work done, provide little hope?

So, let us take them up one after the other. What is the purpose of the research being done? The answer is a remarkably simple one. The work involves seeking out an energy source which is unlimited in power, and cheap, accessible to all nations on an equal footing. This simple a formulation causes confusion, for the topicality of the research is not obvious. After all, reserves of coal and oil are still far from exhausted, solar energy is virtually untouched, we have hardly begun to exploit nuclear fuel - the uranium and thorium ores.

All of this is, of course, true, but only from the standpoint of today, and within the context of a static, unchanging, world. But we live under conditions of a dynamic, swiftly changing world, so, in order to protect mankind against the threat of a power famine tomorrow, today we must lay the foundations for future power engineering.

Let us look at this question in detail. Let us first of all look at how the population of the earth has changed, beginning with estimates made for prehistoric times and ending with the UN forecast for the year 2000. True, the accuracy of the estimates for the distant past is low, but even so this will not change the overall picture. We need not concern ourselves with a few hundred thousand years, but it took those years nevertheless, for mankind to multiply and number one billion by 1830. Yet another billion were added in the next 100 years, but it only took the 1930s for yet another billion people to make their appearance on earth. If it is assumed that existing tempos continue, the population on the globe will increase markedly.

Parallel with the increase in the earth's population, and at an equally rapid tempo, has been the increase in man's energy requirements. Let us trace how energy demands have developed. The introduction of a new measurement unit, IQ = 10^{21} joules, will make for convenience in so doing. A graphic example will serve to characterize the scale of this unit. The energy in one IQ is sufficient to heat two Lake Ladogas and the Aral Sea to the boiling point.

The history of material culture and demographic estimates shows that from the beginning of our era to 1850 mankind has expended 6 to 9 Q of energy. Yet the requirements for just the last 100 years were almost 4Q. Today, the world's requirements run at the level of 1/5Q per year. If the present rate of growth is maintained, by the year 2000 the annual requirement will be running at the 1Q level, and at the 10Q level by 2050. In other words, within 80 years man should be expending just about the same amount of energy every year as he expended between the time of the Emperor Augustus and the present.

To what extent can available resources ensure this growth? A detailed analysis made over and over again by a great many specialists has resulted in a not very comforting conclusion. Mineral resources will be expended within 100 to 150 years. Recurring sources (water power, the energy in tides, etc.) cannot meet the world's growing requirements. The use of solar heat and nuclear fuel is in reserve. Solar energy, unfortunately, has a low density. The energy illumination is almost 1 kw/m^2 for the normal incidence of solar rays. Thermoelectric converters are small at this efficiency. Consequently, a considerable portion of the earth's surface (almost 10%) would have to be covered with solar generators in order to meet man's requirements a hundred years from now.

Nuclear fuel reserves are 5,000Q. It would appear that this would provide a desired solution to the problem for several hundred years, at the very least. There is a fundamental difficulty, however. With the transition of the world's power engineering to nuclear fuel would come radioactive waste materials from nuclear reactors in quantities such that they would be menacingly great and the problem of burying them will be an unusually complex one. Dumping at sea will not guarantee required safety. Discharge of radioactivity into the cosmos will remain.

We should note that all the aforementioned forecasts as to the growth in power engineering were limited to the period of the next 100 to 150 years. This was deliberate. By that time man will have consumed his reserve potential energy (converting it, in the final analysis, into heat) down to that level which will make up an appreciable percentage of the total energy obtained annually from the sun by the earth. The result will be a change in the climate on our planet.

This, then, is what the future for power engineering looks like for the world.

We can find a way out of the impasse if we are successful in using the energy derived from the fusion of light nuclei. Reserves of this type of energy are virtually inexhaustible. With annual demand at the 15 to 20Q level, the deuterium (the most probable nuclear fuel) contained in the waters of the oceans will suffice for a billion years. Herein lies the thought and the purpose of research on controlled nuclear fusion.

Among the various fusion reactions, in the course of which heavier nuclei are synthesized from lighter, which are particularly attractive, are the reactions of the combination of the nuclei of isotopes of hydrogen, deuterium and tritium. The presence of Coulomb repulsion leads to the fact that the probability of nuclear reactions between charged particles can prove to be sufficiently great only in the event that the energy of the colliding particles is quite high. This is the compelling circumstance in the selection of the reacting substances limited by elements with low atomic numbers. Consequently, only two reactions are of interest:

$$D + D \begin{cases} He^3 + n + 3.25 \text{ Mev} \\ T + p + 4.00 \text{ Mev} \end{cases}$$

$$D + T \rightarrow He^4 + n + 17.6 \text{ Mev.}$$

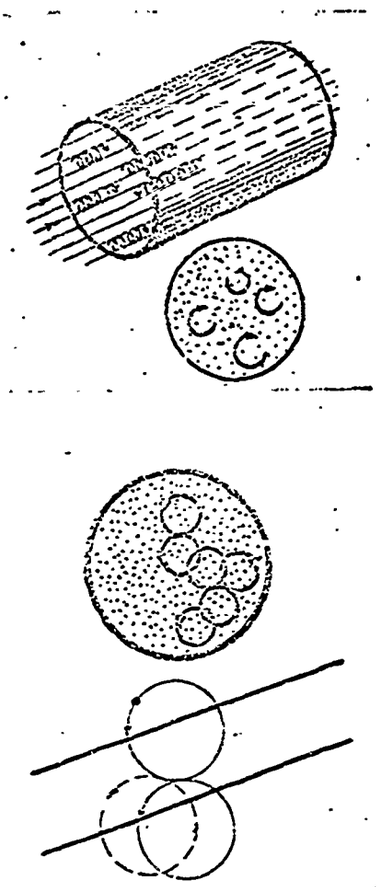

Figure 1. Trajectories of particles in plasma. When there is no magnetic field the particles move about freely in a rare plasma and bombard the walls of the container. Top: magnetic field cut in. The field converts the trajectories of the particles into spirals, with the result that the particles no longer strike the side walls. Bottom: magnetic field cut in. When the particles collide the orbits are displaced by a magnitude on the order of ρ. The particles wander around the container chaotically.

Both reactions have, in their time, served as objects of detailed, experimental investigation. A target made of heavy ice was used and was bombarded in discharge tubes by beams of accelerated deuterons. It was easy to record the appearance of fast neutrons and protons at a deuteron energy level of a few tens of kev. The problem was, apparently, solved, for the energy expended on accelerating a deuteron was several hundred times less than that released during a nuclear reaction (3 to 4 Mev). However, only one out of many thousands of accelerated deuterons striking the target caused a nuclear reaction. The rest were unproductively expending their stored energy in small portions, ionizing and exciting the atoms; that is, in the final analysis, simply heating the target. This occurs because the probability of nuclear reactions is incomparably less than the probability of the ionization and excitation processes taking place. The naturally possible outcome involves the conduct of the reaction, completely, of the ionized fuel in the hydrogenic plasma. In this case the losses in ionization and excitation are excluded and the deuteron-deuteron, or deuteron-triton, collisions sooner or later will be consummated by nuclear fusion.

The plasma must be hot enough, because otherwise the deuteron-deuteron collision will occur at comparatively long distances because of the Coulomb repulsion between the nuclei. These distant collisions will not be accompanied by nuclear reactions. More precisely, in a comparatively cold plasma, the intensity of the nuclear reactions will fall off little, even when the substance has a high density. The plasma must not only be hot, it must also be comparatively rare, otherwise its electromagnetic radiation will turn out to be very high. And the unmade up energy losses from the reaction zone will turn out to be very high.

Quantitative evaluations reveal that the specific power of nuclear reactions will be sufficiently high if the "combustion" temperature is hundreds of millions of degrees. The optimum values for plasma density for which specific power is already sufficiently high, and for which radiation losses are still acceptable, are almost 10^{15} particles per cm^3. (We recall that there are $2.7 \cdot 10^{19}$ particles on one cubic centimeter of a gas at atmospheric pressure).

What is the form in which these conditions are created in the reaction zone in a hypothetical fusion reactor? The question can, in essence, be divided into two parts: how to heat the plasma, and how to maintain the heated particles so they will not diverge for the time needed for the nuclear reactions to occur. The first part of the problem can, as is obvious, be taken care of comparatively simply. Since density is low, plasma, even when heated to enormously high temperatures, retains a low store of heat. Here is a graphic example. We must expend the same amount of heat in order to heat a tea kettle full of water approximately one degree centigrade, or a tea kettle of plasma of the indicated density to 100,000,000 degrees. The chief difficulty we run into in our efforts to obtain a very hot plasma is not in imparting the required store of energy to the plasma, but in liquidating the rapid divergence of particles and the tremendous heat loss to the reactor walls connected with that divergence. Even when the thickness of the transition zone between reaction and the cold wall is 1 km, and plasma temperature is 10^8°K, heat flow is 10^7 kw/cm^2.

Thermonuclear fusion occurs under natural conditions in the interiors of stars, and in the sun, in particular. The gigantic masses of the stars, and the high plasma densities, ensure the occurrence of nuclear reactions in this case, even with ordinary hydrogen (and not with its heavy isotopes), despite the "modest" temperatures (no higher than 2.10^7°K) and the insignificantly effective sections of the reactions. The cosmic scales of the process solve as well the problems involved in keeping the heated plasma in the reaction zone, and in insulating that zone as well, and they do so simultaneously, and automatically. Actually, the gravitational forces are a reliable restraint on plasma divergence, while the vast distances which separate the reaction zone from the periphery make it possible to maintain a temperature sufficient for fusion to occur inside the star. The hot plasma in the stellar depths is wrapped in the thick coat of the external stellar envelopes.

What is it that replaces the force of gravity on earth? How can the flow of heat to the walls be reduced when the transition from the cosmic scale to the laboratory scale is made? Herein is the essence of the problem of controlled fusion.

At a temperature of about 10^8°K, needed for thermonuclear reactions to take place with the planned intensity, deuteron velocity is approximately 10^8 cm/second. This means that in a 1 meter diameter tube the hot deuterons will hit the wall in one-millionth of a second. And for a density of 10^{15} particles per cm^3 the deuteron must travel

almost 10^6 km before it will have any sort of collision, before there is any nuclear reaction with another deuteron. In other words, we must maintain the deuterons in our tube using some sort of mechanism which will at the very least do so for 1000 seconds (we can, of course, build a tube 10^6 km in diameter!).

In addition to the force of gravity, which cannot help the operation of a laboratory model of a thermonuclear reactor, all that remains at our disposal for action on the plasma are the electromagnetic forces, or more precisely, pure magnetic forces, because the electrical forces, which attract particles of one sign, will repulse particles of the other. The use of the principle of magnetic thermal insulation then is the basic idea which has governed all the ways in which the problem of controlled fusion has been investigated in past years. The idea of magnetic thermal insulation was advanced about 15 years ago, and it was almost advanced at the same time in the Soviet Union and in the United States. It was expressed in the Soviet Union in 1950 by Academicians I. Ye. Tamm and A. D. Sakharov. An experimental program of controlled fusion is being conducted in the Soviet Union under the supervision of Academician L. A. Artsimovich, while theoretical investigation is being developed under the supervision of Academician M. A. Leontovich.

Charged particles moving in a magnetic field do so in a spiral, centering around the lines of force of the magnetic field. The stronger the field, the more pronounced the spiral; the larger the transverse component of particle velocity, the wider the spiral. A projection of the spiral in a plane perpendicular to the magnetic field is a circle. The formula for the radius of this circle, in accordance with what has been said, is in the form:

$$\rho = c \times e/m \times v/B .$$

Where v is the transverse component of particle velocity; m is its mass; e is the charge; B is the induction of the magnetic field; c is the speed of light. The magnetic field has no effect whatsoever on the longitudinal velocity of the particle, but free transverse movement of the particles proves to be impossible. If collision between particles is lacking, the particles will circle around the lines of force of the magnetic field for an indefinitely long period of time. A particle can shift to a new spiral only as a result of collision with another particle. Whereupon it is displaced by the value of the radius of the circle being inscribed, on the average. Direction of displacement can change at random upon each collision (fig. 1). Collision frequency will, obviously, depend on plasma density and particle velocity. In this example of a hot plasma, one collision, knocking a particle out of its initial spiral, will occur approximately once per second. This is a rare event, although it is a thousand times more frequent that a nuclear collision. Since the direction of displacement is unpredictable, such displacement will follow a complicated, twisting path and the distance it traverses, δ, from the initial point does not increase proportionately with time, but rather with $\sqrt{t}$. More precisely, the connection between the removal of the particle from the initial point and the time which has passed since the beginning of the diffusion, can be expressed by the formula

$$\delta = \rho \sqrt{t/\tau} .$$

Here τ is the time between collisions (time τ increases rapidly with plasma temperature and its change is inversely proportional to its density). If, for purposes of illustration, we use the same example of a plasma heated to 10^8°K, which has a particle density of $10^{15}/cm^3$, the particles will experience an average of one collision per second. In a field with an intensity of 20 kilooersteds a particle will take almost 2500 seconds, rather than 10^{-6} second to hit the wall of a tube 1 meter in diameter (assuming the magnetic field directed along the axis of the tube). In other words, particle life has been increased 10^9 times.

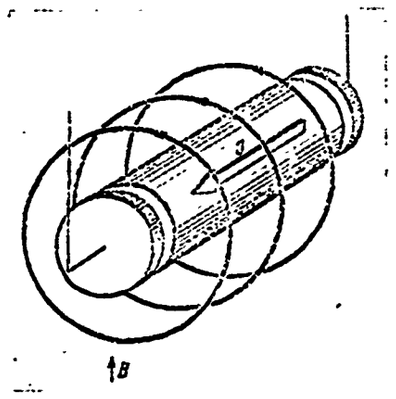

Figure 2. Current, flowing through a gas, heats the plasma and contracts it to the axis of the charged chamber.

Figure 3. Field lines of force and particle trajectories in a magnetic trap.

There is a corresponding drop in the flow of heat to the walls, and talk of a thermonuclear generator ceases to be unfounded phantasy.

Open is the question of how difficult it is to maintain the particles along the lines of force of the magnetic field. Particles are not "magnetized" when diffused in this direction, and leave the reaction zone freely. There are, in principle, several ways in which this difficulty can be overcome. The first way is to use a plasma with a relatively high density and to heat it so rapidly that during the time the main mass of particles is maintained along the lines of force it will be able to experience nuclear collisions. The second way is to put the plasma in a "magnetic trap," that is, in a magnetic field with a configuration usch that it is amplified in the areas in which lines of force are maintained. The particles proved to be locked in, not only in the transverse direction, but also in the longitudinal direction, by the zones of the amplified magnetic field. And, finally, the third, and probably the most clever of all, is to do away with the open ends of the lines of force by shunting them into a ring. The system looks like a "bublik" [a thick, ring-shaped roll].

Let us consider the aforementioned arrangements in order.

In the first of these, the functions of thermal insulation and heating devolves on a brief pulse of current, which can be passed through rarefied deuterium. Because of the interaction of the current with its own magnetic field, it should be constricted; the current will be constricted by the electrodynamic forces existing between the individual current carriers. When the current flowing through the gas is constricted it will, at the same time, entrain the particles being drawn off the container walls by the plasma. Thus, the current, generating a magnetic field around itself, creates an impenetrable barrier which provides the thermal insulation for the plasma. At the same time, this electric current will heat the deuterium as a result of the work done

by the constricting forces and as a result of the Joule heat (fig. 2).

The assumption during the initial stage of the research was that the constriction process was of a quasi-stationary nature, which was, at every moment in time, a magnetic pressure constricting the plasma equal to the gas pressure. A quantitative formulation of this assumption will lead to the conclusion that the temperature of the substance ought to increase in proportion to the square of the current flowing through the plasma,

$$T = I^2 / 4000 \, s \times p \, .$$

Here T is the temperature of the particles, in degrees; I is the current in amperes, p is the initial pressure of the deuterium in mm mercury, s is the cross section of the container through which the current is flowing. As will be seen from this formula, when the current is about 1 million amperes, the initial pressure is 0.1 mm mercury, and container diameter is 200 mm, the temperature of the plasma column should reach approximately 10^7°K. True, the temperature should rise in an extremely short period of time (about 1 microsecond), but very frequent collisions will occur in the heavily constricted plasma column, and neutron radiation should herald the appearance of the beginning thermonuclear reactions.

GRAPHIC NOT REPRODUCIBLE

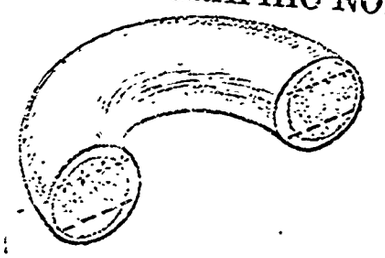

Figure 4. Separation of the charges and drift of the plasma column to the wall side in a ring solenoid.

Everything that has occurred is in complete agreement with what was anticipated in theory, and Soviet physicists celebrated the discovery in July 1952, quite like in the famous episode in Mikhail Romm's outstanding motion picture "Nine days in one year." Unfortunately, neutron radiation from the plasma, despite its being one of the most interesting and unexpected discoveries in the physics of gaseous discharge, did not signify a breakthrough in the thermonuclear research front, and did not signify the discovery of the true thermonuclear reaction. In fact, instead of a quiet, uniform, pinching as a result of the increasing forces of electrodynamic attraction, the pinch is constricted to the axis much sooner than the arrival of maximum current, whereupon there begins a period of instability, of bending, and of dancing of the plasma throughout the chamber, with the plasma touching the walls, contaminating and cooling it. So far as the neutrons are concerned, they do not appear as a result of the heating of the entire, available mass of plasma, but as a result of the collision of a comparatively few groups of very fast deuterons occurring as a result of the complex acceleration processes in the unstable pinch, and with the bulk a comparatively cold plasma.

Thus, the discovery of neutron radiation during pulse discharge was extremely effective, despite the disappointing appearances of these plasma instabilities, which serve to cause the pinch to deviate from the correct, cylindrical form. The years which have gone by since this discovery have, to a considerable extent, been ones of struggle with plasma instabilities of various types.

Of course, it is possible to outwit nature and once again increase the system's energy strength so as to heat the plasma column to the required temperature at the moment the first pinch occurs near the axis and prior to the beginning of development of instability. But the achievement of conditions needed to obtain a thermonuclear reaction with positive power output in the pulse processes of the type under consideration calls for the instantaneous concentration of tremendous energy, almost 10^4 megajoules. Modern engineering can, in principle, cope with the construction of pulse installations rated at hundreds of megajoules. There are available condensers with exceptionally low inductance; low-inductance feeders, as well as extremely modern switch gear, have been developed. Thus, the way for further progress in this direction is open, but the process takes on the nature of a powerful explosion, equivalent to the force contained in the explosion of several tons of trotyl. This is completely unlike the uniform, regular, controlled thermonuclear reaction. Later on we will come back to the possible applications of the pulse processes.

In the second of the arrangements the functions of thermal insulation and heating of the plasma are completely separate. The magnetic walls of the trap are created with the help of a system of external windings positioned so that the magnetic field at the center of the trap is practically homogeneous and amplified at the ends of the system. A typical lines of force shape is shown in Figure 3. A charged particle, moving from the area of the homogeneous field in a spiral, turns around the lines of force of the magnetic field and encounters an area of amplified field at the ends of the trap where the lines of force are bent. If the particle is to be displaced any longer in its previous direction it would be necessary to leave the line of force, but this, as we know, cannot be in there is no collision. Consequently, the particle continues to turn around a bending lines of force system and penetrates an area with a stronger field. At the same time, that portion of the particle's energy associated with its forward movement is gradually converted into the energy of rotational movement. When all the energy of forward movement is expended the particle begins the reverse displacement from the area of the strong field to the center of the trap. Finally, the particles should complete an oscillation from one end of the trap to the other, being reflected from the magnetic mirrors; that is, from the amplified field area at the ends of the system. Of course, little by little, because of collisions, particles will leak through the magnetic mirrors, abandoning the trap along the lines of force.

All of this, is, as should be apparent, simply a rough outline describing, as it were, just the conduct of individual particles. Plasma action, as the totality of many particles, is imcomparably more complex. Some indication as to the nature of plasma movement as a whole can be obtained if it it taken that the hot plasma has diamagnetic properties, and, as will any diamagnetic, it will be ejected from a stronger field area. Given this point of view, the manner in which the magnetic mirrors function becomes quite understandable. But the type of trap under consideration also has an area where the field diminishes as a result of the distance from the axis along the radius. The plasma in this system should develop instability. And in fact the existence of instability of the so-called chute type was established in a number of the simplest types of magnetic traps built at the end of the 1950s (the OGRA-1 trap in its initial variant, and the ion magnetron, in the Soviet Union), while particle life in the system was measured in but hundreds of microseconds. The attempts made to stabilize the plasma using cold gas, or contact between the plasma and the trap walls, using a low voltage arc which burned along the chamber axis (the DSKh-1 system in the United States) [Translator's Note: DSKh-1 is a direct transliteration from the Russian],were unsatisfactory because they led to contamination and cooling of the plasma.

Yet all of these systems are remarkable engineering structures, from the technical point of view. The vacuum chambers are, as a rule,

cylindrical, several meters long, and have inside diameters of from ½ to 1 meter. Vacuums reach exceptionally high levels, and the initial pressure of the residual gases is almost 10^{-8} mm mercury. Typical magnetic field intensity readings in the middle of the trap are 5 to 8 kilooersteds, and 10 to 15 kilooersteds at the mirrors. The research done with these traps, although it failed to fulfill the original hopes, nevertheless yielded much which was of interest with respect to the physics of plasma and proved to be extremely useful for subsequent work.

Substantial progress can be noted for 1961-1962, when a system with a more complex topography for the magnetic field was used. Here, in addition to the field increase at the mirrors there was also provision for an increase in the field in a radial direction, using a series of rods carrying heavy current in addition to the main coil current, thus creatinglongitudinal distribution of the magnetic field. Traps such as these, first built by M. S. Ioffye in the IAE [Institute of Atomic Energy] imeni I. V. Kurchatov, made it possible to obtain plasma configurations with a density of 10^9 to 10^{10} particles per cm^3, a life of tens of milliseconds and temperatures of several tens of millions of degrees.

The came a break, as it were, in the work on controlled fusion, and agreement between theoretical predictions and experimentation, a rare thing in plasma physics, was noted. The initial optimism waned as soon as it was found that attempts to obtain a stable plasma at higher densities were vain. More precisely, when plasma density was increased to values on the order of 10^{11} particles per cm^3 the plasma ceased to remain very long in the trap; in a few tens of microseconds its density fell to the previous value (10^{10} particles per cm^3), after which came the slow drop once again. It is important to emphasize that this result can be obtained for various methods of filling the trap. Whether the plasma is formed by exhausting the ions from the central, cold, plasma column using high voltage pulses, or by injecting it into the trap in the form of a stream of fast neutrals, the result remains as before, plasma life is short.

It seems evident that when densities are high there are set in motion new, kinetic, instabilities connected with the swings in plasma oscillations. Definite opinions have been expressed on how to fight these instabilities, but the suggested ways are difficult ones, for stationary trap fields must be on the order of hundreds of kilooersteds. We must remember that in this particular case the field actually must be stationary, for the life span needed in order to bring about nuclear collisions for working densities of plasma must be thousands of seconds. And if these difficulties could be overcome successfully, the flow of particles leaving the reaction zone would substantially exceed the level responding to the ideal magnetization, while the energy gain from the nuclear reaction would be very meager. Much of the energy produced goes to cover the losses, so that a judgement with respect to the project as a whole is impaired. What is probably needed is deeper experimental and theoretical research in order to arrive at a complete evaluation of the future this trend may have.

Let us now turn our attention to a discussion of the third arrangement. By closing the lines of force we arrive at a natural form of installation of the ring solenoid type. Now the magnetic field throughout is oriented parallel to walls and particles. Leaving the system means cutting across the lines of force. But, as is always the case, there is another side to the coin. The magnetic field within the bublik is not entirely homogeneous, so particles circling around the lines of force flowing through the plasma begin to describe what are complex curves, rather than true circles. The result is particles beginning to drift slowly perpendicular to the field lines of force. Direction of drift will depend on particle charge. If the positively charged particles rise to the upper part of the bublik, those with negative charges will settle to the bottom. The separating charges generate electrical fields. The combination of the intertwining elec-

trical and magnetic fields in turn cause plasma drift which is, overall, in a direction perpendicular to both fields, while the plasma, created inside the ring solenoid by whatever method, falls to the inside of the bublik's outer wall (fig. 4). Consideration has been given to various ways in which to compensate for this plasma drift in intertwining fields; pass a longitudinal ring current through the solenoid, or create a so-called rotating magnetic field converter, which complicates the ring solenoid winding. Of course, we can, finally, twist the bublik and convert it into a figure eight. In this latter case the drift in one half of the figure eight can be compensated for by the opposite drift in the other half.

The first variant is brought about in the Tokamak systems which are under development in the Soviet Union. Two others are contained in the Stellarator [sic] type installation in the United States. Let us look at the first system in a little more detail. The T-3, a large, modern, installation is a toroidal chamber, the large diameter of which is 200 cm, and the small 40 cm. The longitudinal magnetic field is created by eight coils and can reach a figure of 40 kilooersteds. The coils are supplied by a shock generator with a pulse power of 75,000 kva. Vacuum conditions are excellent; the initial pressure of the residual gases is almost 10^{-8} mm mercury. The Tokamak chamber mounted on an iron core and the nascent gas vonvolution acts as the secondary winding of the pulse transformer. Pulse duration of the discharge current is almost 30 microseconds. Joule heat acts to heat the plasma, and the strong longitudinal field acts as a stabilizing frame.

The Tokamak installation, which is a closed, simple type of magnetic trap, does not, strictly speaking, satisfy the stability principle formulated above, a principle which required growth of the magnetic field in all directions from the system center. It can be shown, however, that if the condition

$$H_z/H_j \times a/R > 1,$$

is met, the principle types of instability prove to have been overcome. Here H_z is the longitudinal magnetic field, H_j is the current's magnetic field, a is the small radius of the current, and R is the large radius. As experience has shown, when

$$H_z/H_j \times a/R = 2 \text{ to } 3,$$

large-scale instabilities in shape actually are overcome and the plasma column can be successfully maintained stable for a period of time on the order of milliseconds. In recent experiments a plasma column temperature of 3 to 4 million degrees was obtained, while plasma density was almost 10^{13} particles per cm^3. These high density values, as well as more modest ones, but ones which too had high temperature values, were achieved as a result of long years of systematic work in system improvement.

Plasma parameters obtained, although encouraging, still differ greatly from those on which calculations in the case of the ideally magnetically confined plasma are based. Specifically, the comparatively short particle life is a direct indication of the existence of certain remaining types of instability, and, accordingly, of the existence as well of a high diffusion rate.

Plasma parameters in the Stellarator type installations are: life, almost 15 milliseconds [msec]; density, almost 10^{13} particles per cm^3; temperature, almost 1 million degrees. Chamber cross section for the Stellarator is substantially less than in the large Tokamak models, while difficulties in connection with plasma stabilization are even greater. Despite long-term experiments and the excellent engin-

eering parameters for the system, there has been no success in overcoming plasma instability in this case. Diffusion flows to the walls are many times in excess of classical ones.

An idea as to the external appearance of modern, large, thermonuclear installations can be obtained from Figures 5 and 6, which are photographs of the toroidal trap "Tokamak-3" (USSR) and the trap with combination fields, the "Phoenix" ["Feniks" - in transliteration] (Great Britian).

So, just what has been achieved after 15 years of work? Where are we along the road?

The development of rapid processes has, apparently, reached its natural limit if what we have in mind is a controlled thermonuclear reactor as the end product. But further experiments along these lines (and they will continue) can result in the construction of pulse point sources of neutrons of tremendous power. A unique byproduct of research done has been the development of plasma clusters. In addition to their use for filling magnetic traps with plasma, this work is of independent interest since it provides for devices which can be called plasma propulsion units. Moreover, all of this cycle of research has created a powerful, accelerating, pulse which will have its effect on all experimental and theoretical work in plasma electro- and hydrodynamics.

Work with magnetic traps of the open types is at a crossroads. The next few years will determine how far it will be possible to move in this direction. It is likely that one unusually interesting application of the theory of the movement of particles in the fields of a trapped configuration will be worth recalling. The recently discovered radiation belts around the earth are magnetic traps for charged particles of cosmic origin. We should note, in passing, that the life of particles in these traps can be measured in months, as direct experiments have shown.

Closed magnetic traps now appear to have the best future. The question of the possibility of building a thermonuclear reactor of the ring type while retaining existing particle loss levels boils down to this. The dimensions and the parameters for the proposed thermonuclear reactor of the future are beyond the capabilities of modern engineering, but do not appear to be hopelessly so if what engineering will look like in the next ten years is taken into consideration.

GRAPHIC NOT REPRODUCIBLE

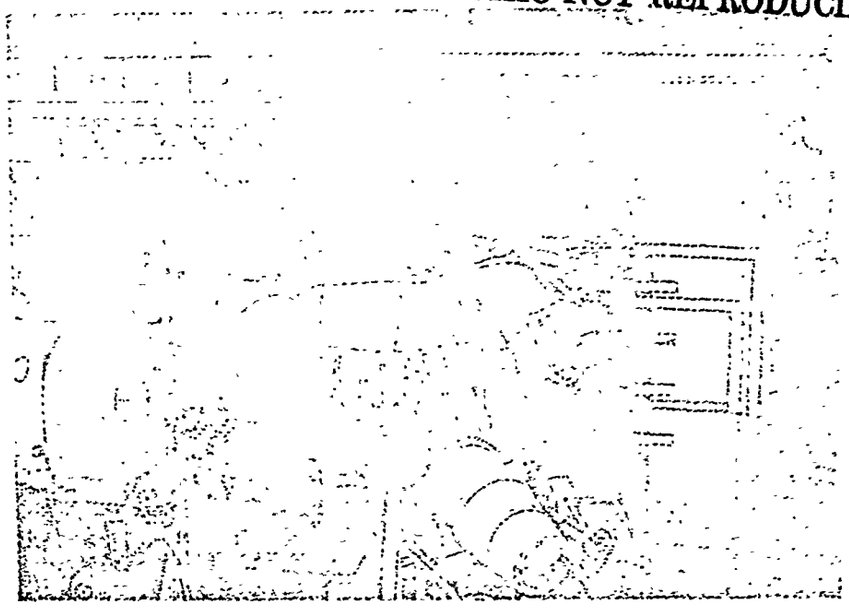

Figure 5. The "Tokamak" toroidal trap.

GRAPHIC NOT REPRODUCIBLE

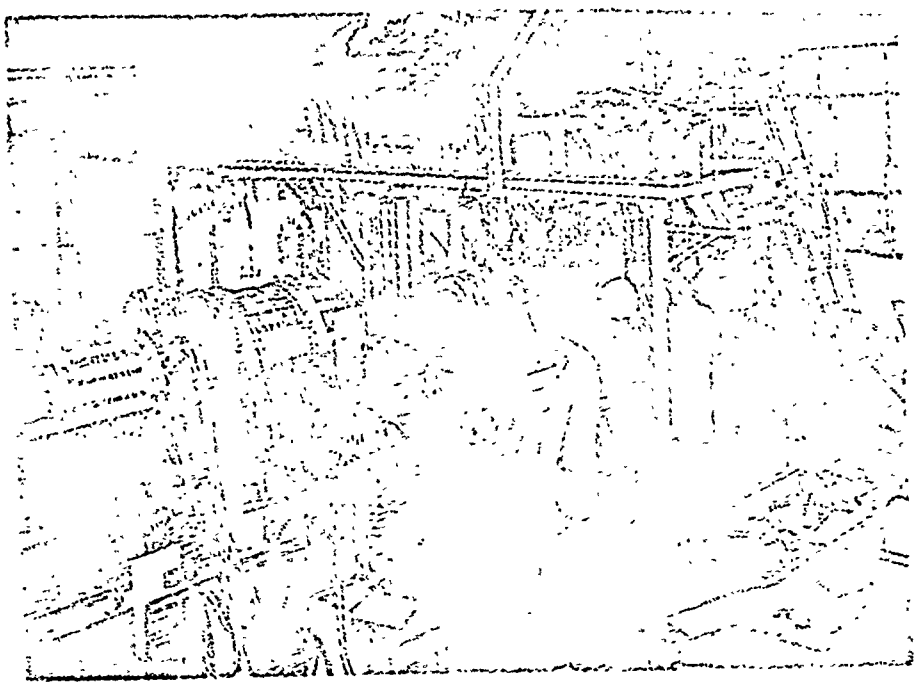

Figure 6. The "Phoenix," a trap with combination fields.

Tekhnika i Vooruzheniye, No 11, 1966, pp. 70-71

THE MINIMUM AWARD

By Engineer Colonel N. SCHASTNYY

We have received a letter. Its author, a rationalizer, writes: "I have developed three suggestions, which have been accepted and introduced. The Commission has decided in each case to award me three rubles. Was this decision correct?"

In this case, the decision of the Commission on the amount of the award was a mistake.

Unfortunately, cases of payment of awards of two to five rubles for a suggestion acknowledged to be good and worthy of introduction are not uncommon. Most often, an attempt is made to explain this by saying that the suggestion, its value and technical content are so insignificant that no great sum should be paid for it. In one military educational institution it was openly acknowledged that some of these suggestions might not have been considered worthy of awarding at all but that this would have lowered the quantitative indices, which would be undesirable. We cannot agree with any of these conclusions. State funds must be preserved, true enough, but Soviet justice should not be disrupted to do it.

The criteria for evaluating any rationalizers suggestion are of course its significance and usefulness. It is worthy of note that among the other characteristics used to evaluate suggestions are the conditions that the suggestion must contain a technical solution to the problem; that this solution must be the result of independent work of the author or reworking by the author (depending on the concrete conditions) of solutions borrowed from the experience of his work or from the literature; that the suggestion not be a repetition of that earlier used or called for by the norms (technical condition, norm documents, etc.) already in effect or recommended by a superior organization.

In the competition for high quantitative indices, the organizers of rationalizer's work often "forget" these conditions. Let us give an example: at one of our repair plants, the book used to record rationalizer's suggestions is full of entries. The greater portion of these suggestions relate to the manufacture of stamps and permanent molds for pouring of parts. Why should these simple stamps be the subject of rationalizer's suggestions? Their design can be easily found in textbooks on cold metal working. It is obvious to anyone that the manufacture of 500 stopper plugs should be performed by a stamp, rather than making them by hand. The technologists of the plant should see to the preparation of the proper equipment before manufacture of new parts is begun, but they have declined to solve the technical problems at hand where they require a creative approach. Thus, many suggestions must be made by the rationalizers.

In competing for numbers of rationalizer's suggestions in military

units, military educational institutions, repair shops, etc., it often occurs that the books are filled with suggestions bearing no relation to efficiency. For example, in one shop complex units had to be dissembled, and it was difficult to reach certain nuts using ordinary wrenches. One repair worker suggested to the shop foreman that he be given permission to make a socket wrench. The permission was given, but it was recommended that he make a rationalizer's suggestion concerning this wrench. The Commission thought about it for a great deal of time, as to whether they should consider this suggestion worthy of award or not. Opinions were divided. Some believed that end socket wrenches have been known for some time and that the worker had not shown any real creativity. Others affirmed that he still make the wrench himself, and that therefore the suggestion was worthy of an award. The award was made... Two rubles, plus a certificate for his rationalizer's suggestion.

At one military school, a competition was announced for the best rationalizer's work. The department of social and economic disciplines was included in the competition. Only one suggestions was made in this department -- equipment for a foreign language class. At the sessions of the inventors commission this department was often noted as one which was falling behind The decision was made to "correct" the matter by entering various photographic display stands and models as rationalizer's suggestions. The commission awarded these "rationalizer's suggestions". The number of suggestions increased and awards of two or three rubles began to become more common.

How should we relate to these quantitative indices? Can we, should we fail to take them into consideration in evaluating rationalizer's work? No. They have been and continue to be one of the most important criteria for evaluating the creative activity of rationalizers. But we should be sure that we allow no deviations in evaluating suggestions. This will aid not only in bringing order to the dispersment of funds but also in directing the initiative of inventors to the solution of genuinely creative problems.

As concerns the minimum sum of an award for introducing rationalizer's suggestion, it should be no less than ten rubles.

Tekhnika i Vooruzheniye, No 11, 1966, pp. 72-73

A NEW STAND

By Engineer Lieutenant Colonel L. VOLOSHIN,
Captain A. TSYBUL'NIK

We have developed a new universal stand for assembly and dissembly of the counterrecoil mechanism of artillery systems, which has been accepted by the State Committee on Inventions and Discoveries of the USSR as an invention (class 72S, 18, 87a 22MPK 07). It is designed for dissembly and assembly of counterrecoil brakes and mechanisms of various artillery systems. The stand weighs 350 kg. It is 1.2 m long, 1.06 m wide and 1.3 m high.

The tank of the system (14 liters capacity) contains 12.5 liters of hydraulic fluid. This fluid is pumped by a single stage gear pump driven by a type AO-42-4 electric motor, power 2.8 kilowatts, operating at 1420 rpm. The motor is supplied by an AC 220/380 v line.

The working cylinder is a shortened cylinder from a counterrecoil brake model 52-PT471. The maximum pressure produced by the pump is 14 kg/cm^2. The stand develops a torque of up to 1370 kgm. The rotation angle covered during one stroke of the wrench, which lasts 20 seconds, is 25°.

The universal stand consists of a base, a rotating table and a hydromechanical wrench.

The base is a metal frame welded up of a channel section and angle iron faced with aluminum sheets. The right portion of the base is used as a cabinet for storage of attachments and tools.

The rotating table is also made of angle iron. It contains collars with inserts to hold the various counterrecoil mechanisms. On the bottom, an axis is welded to the rotating table; the axis rides bearings. This axle is installed in a box welded to the base. The table can be fixed in any of four different positions.

The hydromechanical wrench consists of two parts. The first part is the mechanical wrench, in a body with a six-sided axis and rachet mechanism. The mechanical wrench is mounted in a sliding block and can be moved horizontally between the mounting brackets. Its position is fixed vertically using the wheel and nut. The second part of the hydromechanical wrench is the hydraulic drive, which includes the single stage gear pump and electric motor, two working hydraulic cylinders, the distributing valve, oil tank, control valve, tubing system and manometer. The hydraulic system uses a mixture consisting of equal quantities of MT-16P oil and diesel fuel.

In dissembly of counterrecoil mechanisms, inserts of the proper dimensions (corresponding to the counterrecoil mechanism being dissembled) are first placed into the collars of the device then the counterrecoil brake (or recuperator) is installed. The blocking ridges on the cylinder are placed into the slots in the inserts and tightened. The replaceable

head of the proper size is placed in the six-sided axle of the mechanical wrench (various sizes are available in the set). The table is rotated to place the nut on the recoil brake or recuperator next to the mechanical wrench. After this, the table is locked in place. The rachet mechanism is placed in the far right position (for unscrewing), the head of the wrench is mated to the nut and set in place by moving the six-sided axle. The pressure regulating valve handle is moved and pressure is set equal to that noted in the table below, as indicated by the manometer. Then the electric motor is started and the handle of the distributor is moved forward fully. The cylinder shafts begin to rotate the wrench counterclockwise, unscrewing the nut. When the mechanical wrench reaches an angle of 25°, the distributor handle is pulled back completely, so that the wrench moves in the opposite (reset) direction. After the wrench is once more horizontal, the handle is moved forward once more. These operations are repeated until the nut can be removed by hand. The head of the wrench is removed from the nut, moving the six-sided axle to the left. Then, the table is unlocked and moved to a position convenient for final removal of the nut.

GRAPHIC NOT REPRODUCIBLE

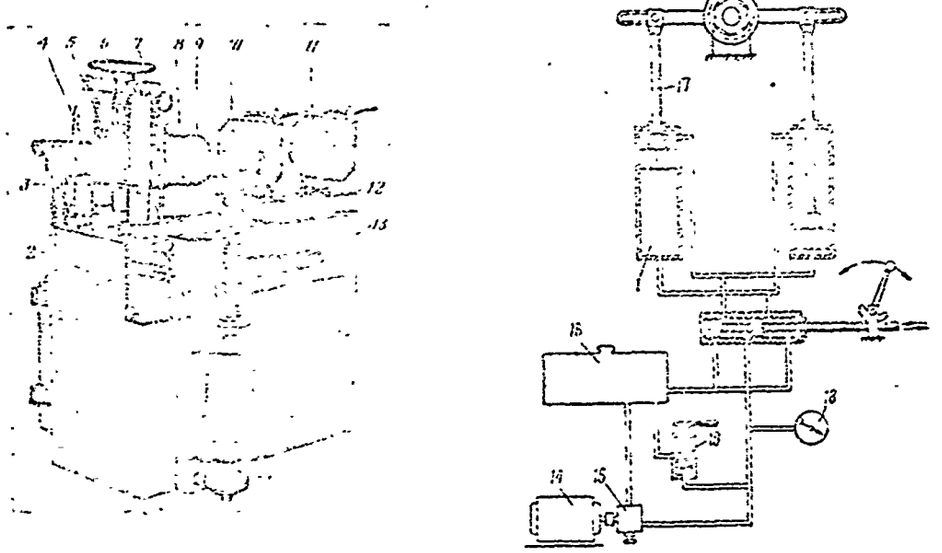

External view and hydraulic system plan of universal stand for dissembly and assembly of counterrecoil mechanisms:
1, cylinder; *2*, distributor; *3*, bracket mount; *4*, six-sided axle; *5*, slide block; *6*, nut; *7*, wheel; *8*, wrench body; *9*, removable head; *10*, collar for holding counterrecoil mechanisms; *11*, insert; *12*, rotating table; *13*, brace; *14*, electric motor; *15*, gear pump; *16*, oil tank; *17*, piston and shaft; *18*, manometer; *19*, control valve.

No. of System	Torque, kgm	Manometer Indication, kg/cm^2
52-LS-365	280	3
52-LT-412	-	-
52-PT-347	440	4
52-PT-471	555	6

Usually, experienced specialists require no more than one minute for this operation.

During assembly of counterrecoil mechanisms (tightening of nuts), the same operations are performed except that the working and reset strokes of the mechanical wrench are opposite. Also, the rachet mechanism must be moved to the opposite direction. In order to tighten the nut normally, pressure must be regulated. It is set by the manometer according to the table above.

The table is usually mounted on the outside of the stand.

When working with the stand it should be recalled that the nut can be loosened only when the mechanical wrench is horizontal and tightened only when the wrench is inclined to the maximum in the direction opposite the working stroke.

Under stationary conditions, this stand is installed on a cement floor and fastened by four anchor bolts; under field conditions, it must be installed on a flat area on two wooden beams 100 × 100 × 920 mm. It is fastened to these wooden beams by four bolts.

Tekhnika i Vooruzheniye, No 11, 1966, pp. 73-79

EXPERIENCE AND INITIATIVE

An operating stand which can be used to show the operation of a centrifugal oil filter clearly has been made according to the suggestion of rationalizer N. Pliyenko. The standard YAMZ-238 motor filter is used, with the metal cover and rotor cap replaced by glass cover *1*. Also, a window 20 × 160 mm is cut into the body of the filter at the level of the jets. Pressure is created in the system by manual fuel pump *2*, type RNM-1. Oil tank *3* is mounted in the base of the stand. The students can observe the flow of the oil from the jets and rotation of the rotor under the influence of the reactive force thus created.

GRAPHIC NOT REPRODUCIBLE

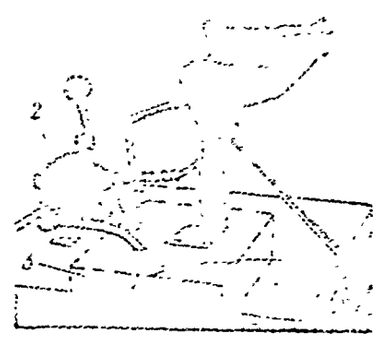

A signaling ohmmeter has been recommended by Engineer Major L. GORN, to be used in performing a large number of similar tests. The signaling ohmmeter has no arrow indicating scale. Its voltage and current are not dangerous for the elements of the circuit being tested. The device consists of a measuring bridge (Figure 1) consisting of resistances R_1 - R_4, one diagonal of which is connected to an audio generator (T, T_p, C) while arm R_4 is connected through terminals K_1 and K_2 to probes. The frequency of the oscillator depends on the capacitance of condenser C. The bridge is supplied from battery B_1, the collector circuit of the triode from battery B_2. A loud-speaker is connected in series to the primary of the transformer.

When the circuit being measured is connected to the probes, the balance of the bridge is disrupted. If the resistance of the circuit is less than or equal to a given limit, a voltage from the diagonal of the bridge excites the oscillator. A signal appears across the speaker, which can be easily heard up to 5 m from the instrument. If the resistance of the circuit being tested is greater than the fixed limit, a very small voltage will be fed to the oscillator and it will not operate. Consequently, no signal will be heard from the speaker.

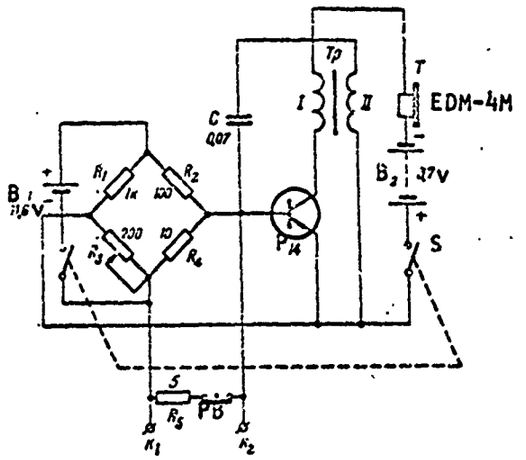

Figure 1.

Preparation of the device for operation consists of tuning the measuring bridge. For this, switch *S* is used to connect the voltage, and button *PB* is used to connect resistance R_5. The signal will sound from the speaker. The handle on the potentiometer is rotated until oscillation of the oscillator is broken off. After this, resistance R_5 is disconnected.

50 to 70% less time is required for testing resistances using the signal ohmmeter than using an arrow indicating ohmmeter.

Bending of the sear can be prevented when shooting with sub-calibre barrel inserts if, as Engineer Captain I. GORDIYENKOV recommends, terminal breaker *K* (Figure 2) is included in the firing circuit. Its contacts will be closed only when the breechblock is closed, so that the sear is not bent.

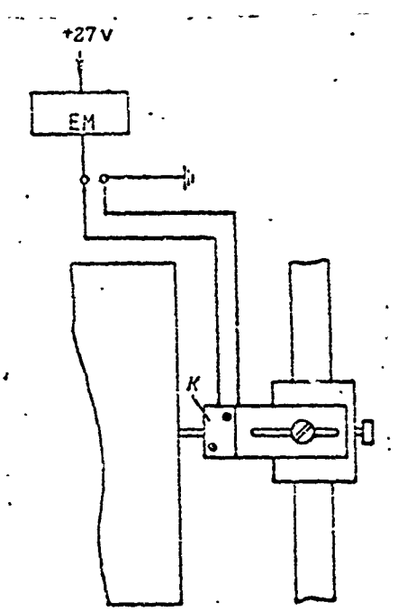

Figure 2.

A universal device (Figure 3) for checking the quality of repair of model *AK* and *AKM* automatic devices and the *RPK* machine gun, Lieutenant Colonel of Technical Service I. KEUDRAVTSEV reports, has been developed by Captain of Technical Service Yu. STOLDUNENKO and student A. Kholopov. The device consists of a tube with head *1*, shaft *2*, directing socket *3* with divisions, yoke *4* and a spring. The head has a notch which is used for opening the cap on a gas tube and the handle has a notch for opening tipstock closure.

In order to determine the amount of free-play in the metal butt, the device is placed into the grooves between the directing tubes of the recoil spring. Then, the shaft with its directing socket is drawn out and the amount of free-play is determined, which should be not over 15 mm.

The feeler is used to check the drop of the hammer from the cocked position if the bolt is not fully closed. The hammer should not be dropped from the cocked position if the bolt lacks 6 mm of attaining its farthest forward position.

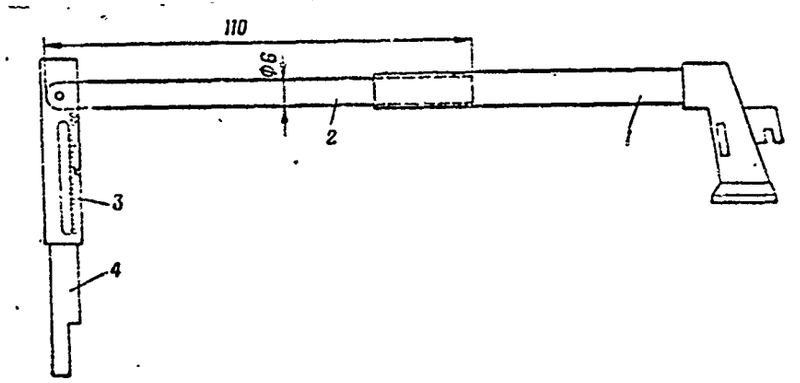

Figure 3.

The zero sighting line of the 130 mm M-46 cannon is usually checked by an easily visible sighting point located no less than 1000 m from the weapon. In order to facilitate laying of the weapon, Major of Technical Service I. GUSHCHIN suggests usage of the OP-4-35 optical sight. The front end of the tube of this sight is placed into the aperture in the recess for the firing pin (the diameter of the tube is exactly equal to the diameter of this recess). The line of sighting at zero setting can be checked conveniently at night using an illuminated board. The bulbs can be powered by a battery and wire from the LUCH-S71m set. If no aiming point can be selected in front of the weapon, the line of sighting at zero setting can be checked using the board or a remote aiming point (TN), located behind the weapon.

For this, the barrel is aimed toward the TN using cross hairs glued to the muzzle face and breech face of the barrel. The panoramic asimuth scale is changed by 30-00. This check of the zero line is particularly convenient when firing positions are located on a coast line, in a forest or swampy area, or in trenches with protection from atomic weapons.

A universal device for determination of the error in beam compasses with measurement limits of 200-500 mm inclusive has been developed by rationalizer V. Kushniruk. It allows testing to be performed using only one end measurement. The device (Figure 4) consists of a frame which is

placed onto the beam of the instrument.

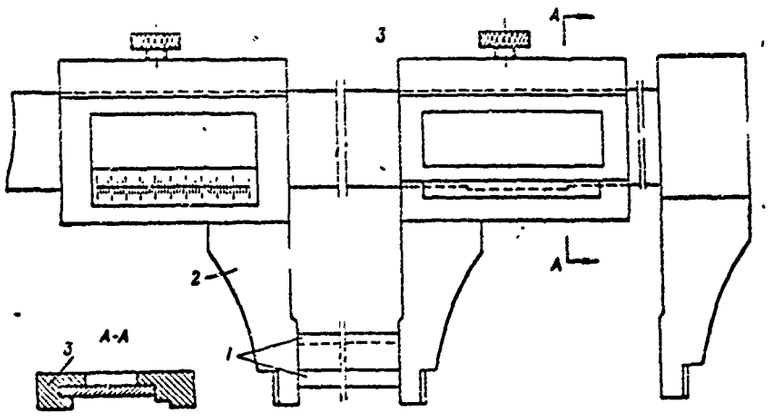

Figure 4.

The short end gage *1* is pressed into the measuring surface of the stationary jaw of the beam compass and movable jaw *2* is moved up to it. A reading is taken from the nonius, and the movable frame is fastened using the screw. Then, additional frame *3* is applied to the beam, it is pressed tight against the frame of the beam compass and fastened with a screw. Once more, the beam compass is backed off and the next sector of the beam scale is tested, the supplementary frame now acting as the non-moving jaw. In this way, the entire length of the scale can be checked for accuracy.

A device for straightening scabbards (fig5)has been suggested by Captain of Technical Service A. GORELKIN. Straightening device *1* is placed in the scabbard and is driven until it contacts front brace *2*, after which it is driven back out by striking rear brace *5*. This operation is repeated two or three times. For convenience, movable collar *3* is placed onto the guiding rod of the straightening device, to increase the area of the braces. The device is reliable in operation and can be made in organizational repair shops.

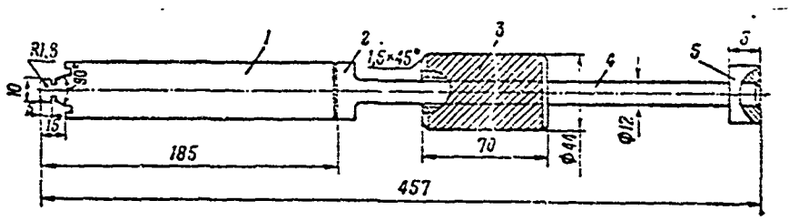

Figure 5.

A re-equipped manual bridge crane with a lifting capacity of 3 tons allows the number of workers involved in loading and unloading operations to be decreased and the productivity of labor to be increased, S. Nikiforov reports.

The bridge crane, which carries a mechanical tackle with a lifting capacity of 3 tons (Figure 6) also carries type TE-1 telpher *8* and an electric drive mechanism for moving the beam.

Electric motor *3*, 4.5 kw, rotates shaft *7* through worm gear *4* (gear ratio $i=1:95$), shaft *2* and chain drive *1*; gears *5* ($z=14$) are

mounted at each end of shaft *7*. They mesh with gears *6* (*z=76*), which are solidly fixed on the driving wheels.

GRAPHIC NOT REPRODUCIBLE

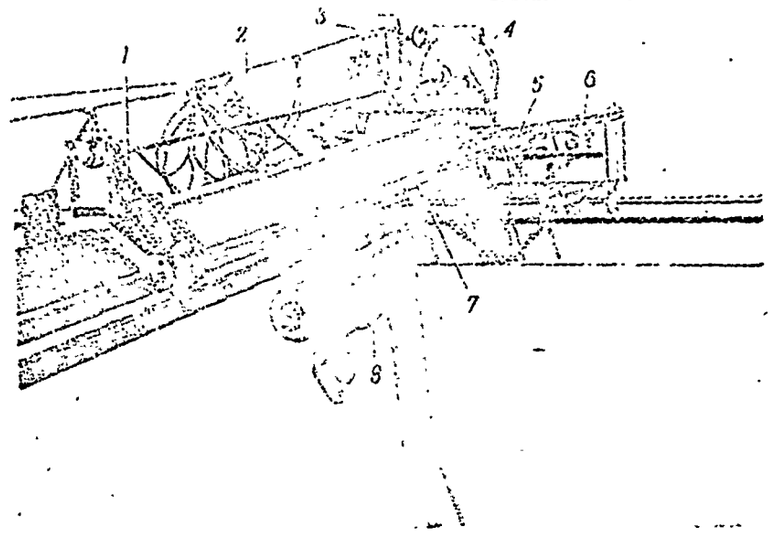

Figure 6.

The location of the motor on the trolley allows the beam to be unloaded and prevents vibration.

Electric power for the motor is supplied through a type KRPT cable fastened in brass rings hanging on an 8 mm diameter line which is stretched out beneath the crane. The beam moving motor and telpher are controlled from a common panel. The rate of movement of the crane is 6.85 m/min.

Electrical polishing of the drive wheels in water jet propellers on amphibious armored transporters allows an increase in the quality of repair and considerable reduction in expenditure of labor. This fact is reported by Engineer Lieutenant Colonel L. PIKUS and Engineer B. SAKHNOVSKAYA. Electrochemical polishing provides very strong bonding of the chrome to the base metal, even in the most difficultly accessible locations. In the process of polishing, the sharp edges of flaws and fissures are more intensively dissolved. The viscous saline solution is retained in depressions, and their surface is dissolved less, although sufficiently to ensure deposition of chrome. Therefore, there is no need to remove all insignificant flaws and spots completely.

Almost no mechanical working is required in preparing the surface of the working wheels for chroming. Each part is first chemically etched, removing the remainder of any chrome coating. The etching is performed in a bath containing a solution of sulphuric and hydrochloric acids (100-150 g/l H_2SO_4 and 30-50 g/l HCl).

After rust has been completely removed, the end surfaces of blades with nicks and spalling are cleaned. Then, the wheels are mounted onto the support and placed in the bath for electrochemical polishing. The solution contains 60-65% phosphoric acid, 12-15% sulphuric acid and 4-6% chromic anhydride. The temperature of the solution is 70-80°C, the anode current density is 40-50 a/dm^2. The duration of polishing is 3-5 minutes. In rare cases, when deep cracks have formed on the wheel blades,

the polishing time may be increased to 8-10 minutes.

During the electrochemical process, trivalent chromium is formed in the solution. When its content exceeds 1.5%, the quality of polishing is decreased. In order to increase the service life of the electrolyte by a factor of 2 to 2.5, anode oxidation of the trivalent chromium to six valent chromium is performed periodically. In this, it is necessary to separate the cathode space from the anode space using a porous ceramic barrier. After polishing of a part, it is ready for chrome plating without further treatment.

Liquid can be poured into the "Tsiklon" [cyclone] system as a closed jet by using a device (Figure 7) suggested by Captain Yu. PONOMAREV. The device consists of tank *1*, capacity 20 liters, with built-in piston pump *2* with input valve *8* and delivery valve *5*. Pouring throat *6* has filter screen *7*. The liquid is poured through rubber hose *4* with nozzle *3*, selected from the standard ZIP [kit of spare parts and tools]. The piston pump can be made of a syringe or grease gun. Before being poured, the liquid is filtered through a standard batiste or screen filter mounted in the throat. The system can be filled by one man.

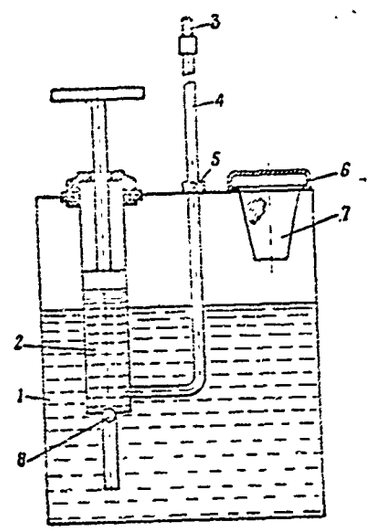

Figure 7.

A set noise suppresser for the R-105 radio receiver, made by private B. Gapon, consists of diodes, resistances, a condenser and a switch (Figure 8).

When the radio set is in the "receive" mode, when there is no useful signal on the antenna, the diode is connected to the output of the discriminator. The receiver is shunted and no noise is heard at the output, since the noise amplitude is reduced by a factor of 6 to 8. When a useful signal appears at the receiver input, a negative voltage appears in the control grid of the amplitude limiter, which is applied to the diode. In this case, the discriminator is not shunted and normal communications is provided.

Made up on a small pertinax plate, the noise suppressor can be connected to the control panel of the station and placed beneath it, while the switch is mounted on the front panel.

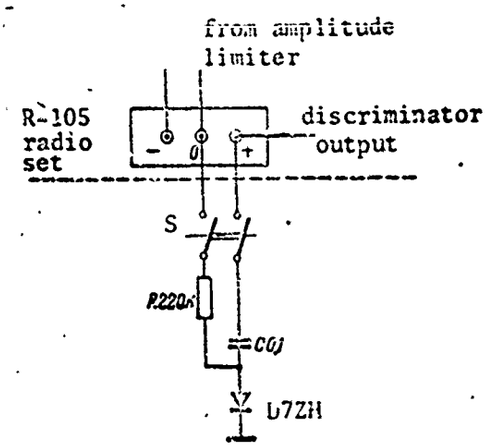

Figure 8.

A circuit for power supply of the R-104 radio set (portable variant) from a 220 v AC line has been suggested by Captain V. SUPON'KO.

Transformer T_1 (Figure 9) is the basis of the power supply rectifiers for the filament and anode-screen circuits of the receiver and exciter tubes; transformer T_2 is the basis of the rectifier for power supply of the anode-screen circuits of the transmitter tubes and to produce the bias voltage. Relay Re_1 connects in the transmitter rectifier when the talk button is pushed on the microphone.

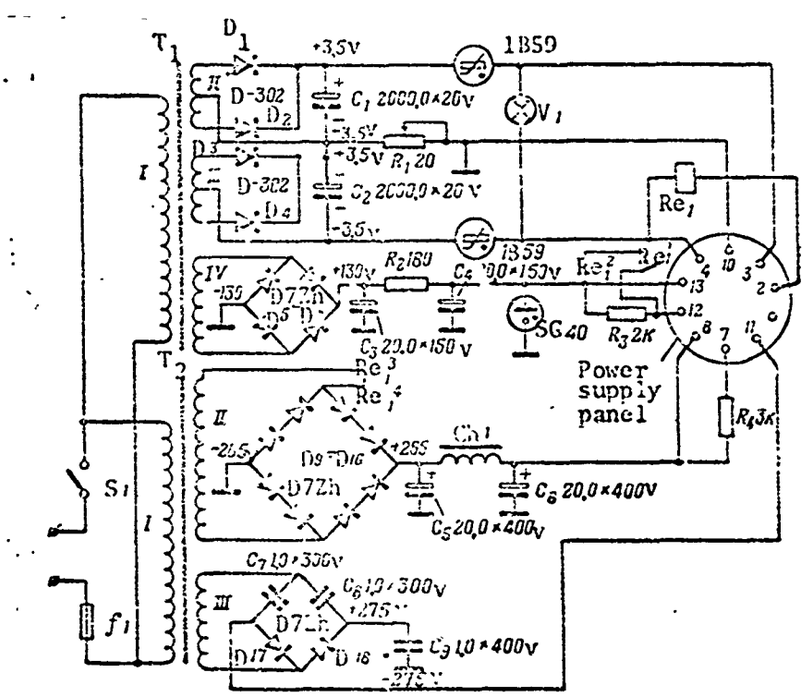

Figure 9.

The unit is assembled on the chassis of the RBM transceiver. Resistors R_2, R_3 are type MLT-1, R_4 -- PEV-15. Resistor R_1 is a rheostat from a type R-104 charging board. Transformer data are presented in the table below.

Symbol	Core	Number of turns	Wire, PEL, mm
T_1	SH-20×30	I-1830	0.25
		II,III-2×33	0.8
		IV-1240	0.15
T_2	SH-20×30	I-1830	0.25
		II-2370	0.22
		III-1240	0.10

The R-104 transceiver is connected by cable to the power supply. After this, the radio set is turned on, then the power supply is turned on. When necessary, the 4.8 v voltage can be controlled by resistance R_1.

Tekhnika i Vooruzheniye, No 11, 1966, pp. 80-83

GOOD SERVICE, VLADIMIR!

By Engineer Major Ye. PATEYUK

The number of readers who have taken part in the discussion of the letter from student Vladimir S. which was published in No 6 of this journal has reached several hundred. Everyone who has written the editors has directly or indirectly asked who this Vladimir S is, and in what school he is studying.

There are many educational institutions in our Armed Forces, which are rich in glorious history and remarkable combat traditions. The school from which Vladimir wrote us his letter was founded by Peter the First. Mikhail Illarionovich Kutuzov, one of the participants in the Sevastopol' Defense of 1854-1855, General E.I. TOTLEBEN, the writers F. I. Dostoyevskiy and D. V. Grigorovich, the Infantry Commander of Port Arthur, General R. I. KONDRATENKO and Hero of the Soviet Union Engineer General Lieutenant D. M. KARBYSHEV all studied within its walls.

In the time of the Civil War, the students of this school courageously fought the white guards and the interventionists. During peacetime, this educational institution has trained excellent military men. Its graduates earned themselves unfading glory on the fields of battle during the Second World War: 35 of them have been awarded the rank of Hero of the Soviet Union.

We are in the Kaliningrad Higher Military-Engineering Command Order of Lenin Red Banner School Imeni A. A. Zhdanov. A young man who has decided to dedicate his life to the military service receives his political and moral tempering here, and takes on command skills. The experienced teachers and well-equipped classes and laboratories aid in successful mastery of the tremendous sum of general theoretical and special knowledge required.

One of the most effective forms of teaching the students a love for their equipment and deepening their technical knowledge, it has long been acknowledged, is inventors' work. In the Kaliningrad school, in 1965 alone 117 inventors developed and introduced 141 rationalizer's suggestions. Among the best of these are Officers P. ZHEMANOV, A. GONCHARENKO and B. NIVIN, Sergeants of extended service V. Beskhmel'kov and V. Ishutin, students V. Stefanovskiy and V. Pishulin, and many,many others. The rationalizers have developed extremely complex teaching aids, display stands, etc. Some trainers, such as those developed for studying operation with the E-305 excavator and the MTU bridge layer, have been adopted for series production. In our technical classes we have been shown acting models of the BTM [high speed trench digging machine] and remote controlled models of other machines.

A creative spirit and involvement of the team are felt everywhere. This is not by chance. The commanders and party organizations have always and everywhere supported the technical investigations of students and teachers. A creative day -- Thursday -- is officially scheduled.

Special time is set aside for lessons in clubs, sections, etc. Students who are doing well in their studies are permitted to spend time at creative work during the last hour of independent study. In each department, rationalizer's rooms have been set up. We visited one of these rooms. A drawing table, work bench, drill press and lathe for wood and metal, vises and tools were present. The shelves carry aluminum, plywood and tin parts, and a set of metalware. The cabinet contains relays, electric motors, contactors; in other words everything necessary. There is also a school-wide rationalizer's room. It contains technical handbooks, and collections of journals. The patent literature has been collected in this school for four years. Each week, consultations are given in the rationalizer's office. Technical clubs have been created in every department. The senior teachers give lessons. These clubs are joined into sections headed by the heads of the various school departments. Still, the work is headed by the Commission on Inventions. Its secretary is an active inventor, Engineer Lieutenant Colonel A. GONCHARENKO.

To begin our extra-curricular acquaintance with Vladimir S: we had discussions with the officers of his school section and the commander of his company. We read the documents and characteristics.

Student Vladimir S is completing his training. In all the required disciplines, he has demonstrated excellent knowledge. His service card shows nothing but the best. During independent study, he went through 36 exercises, all with the grade of "outstanding". In his report book it is written: "Well disciplined, enthusiastic for work. His preparation in all subjects is excellent. He has a good attitude toward his service, has good methodological and organizational skills. Works capably with the non-commissioned officers and cooperates with the active Komsomol members. Has acted decisively and capably in company exercises. He is well drilled. Physically well developed. Suitable for the duties of a platoon commander."

"A capable student," his company commander, Captain N. KIRICHENKO says, "he thinks a great deal."

"What does he work on?"

"I can't say exactly," the commander answered, "something to do with pile driving equipment..."

At our first meeting with Vladimir S, he brought along a thick notebook. It contained drawing, sketches and calculations. A great deal of work has been done. But the level of the work...

During his years of study, Vladimir has, of course, learned a great deal of useful information. But this information is clearly insufficient to perform independent planning, especially in this considerable volume. According to his words, Vladimir understood this only after reading the answer of Engineer Colonel V. DORONIN to his letter to the editors.

It all began this way. A suggestion concerning new design for a bridge building ferry based on a tracked transporter was sent by Vladimir to the Commission on Inventions. It was analyzed and rejected with the note that the solution was not technically wellfounded.

Then, Vladimir and a comrade decided to develop working drawings of the new ferry themselves.

"Why did you take this particular machine as your basis? Why did you think of using diesel hammers on this essentially highly mechanized

device?"

"What else could we have used?"

"Suppose this variant is the best. You use hydraulic power in your drive system. What sort of pump will be used?"

"A gear pump."

"Why?"

"Well, it produces the highest pressure and high output."

"What pressure will you use?"

"High pressure, 10 or 12 atmospheres."

"By the way, what pressure do you think is used in the hydraulic system of the E-153 excavator, and what sort of hydraulic pumps are used in it?"

It was discovered that Vladimir had never heard of axial piston or blade pumps, nor of hydraulic motors. He has no concept of the principles of hydraulic drive design. And this is not surprising. His program of studies simply does not include these problems.

"Did you turn to your teachers for advice?"

"No. That seemed somehow difficult."

From his tone of voice we can feel that Vladimir disagreed with the decision of the Commission on Inventions and did not trust his teachers. Therefore, he decided to write his letter to the editors, with its request that the proper path to rapid inventors' work be shown.

How did this mistrust arise? Simply because the student was no longer controlled by the team. In the podrazdeleniye where Volodya was studying, were they aware of his occupations and dreams? Yes and No.

Captain K. KIRICHENKO, one of the best of commanders, gives a good deal of time to individual work with his students. The problem is, that the greater part of this time is generally taken up by the "difficult" students. They are helped and given advice. If someone had shown Vladimir the source of his errors and directed his work into a useful channel, he, with his capability for work, creativity and interest, would have become one of the best rationalizers.

The Commission on Inventions was not exactly correct in its approach to his suggestion. Someone from the commission should have discussed the problem with him and given concrete suggestions for solution. His comrades in the podrazdeleniye also let him down; many of them are active in various technical clubs.

The readers who answered the letter of Vladimir S were unanimous in noting the necessity of working in a team. But, when a man leaves the team, this is not only an appearance of his individualism -- it is a failure on the part of the whole team. It is the fault of the team, the podrazdeleniye commanders, the party and Komsomol organizations also that the student has developed an incorrect conception of his army service. Could it be that he is not alone? And this still happens, in

spite of the fact that students have their military experiences in the best units. Obviously, the students must be made more fully aware of the nature of their future service; difficulties must not be hidden. They must be prepared to combat them.

We parted friends with Volodya. He was touched by the concern of the editors. True, he was embarrassed by the fact that the magazine and its readers would be talking about him. Truthfully speaking, he was afraid that he would be laughed at by his comrades. Volodya made a mistake. What would seem to be an individual case and the personal concern of one man has become the theme of a great and spirited discussion concerning the service of soldiers and the place of inventors in the military.

Helping our comrades, supporting them and showing them the proper path -- these are basic laws of our military comradery.

In parting, we wished Volodya that his service would be successful. He firmly and confidently said:

"When I go to serve in my unit, I will serve conscientiously and I am sure that I will gain the right to study in a military academy.

As this issue was going to press, we received an official letter from the school. It was reported "Vladimir Semenovich Syshchikov, graduate of the Kaliningrad Military Engineering School Imeni A. A. Zhdanov, graduated from the school, received his diploma cum laude and has been directed for further service in the military."

May you have an excellent career, Vladimir!

FROM THE EDITORS: With this article we end the discussion of the letter of Vladimir S. The editors thank all the readers who took part in this great and important discussion.

Tekhnika i Vooruzheniye, No 11, 1966, pp. 80-81

ALWAYS SEARCHING

By Colonel I. DEGTYAREV

It was at an ordinary exposition of the creativity of inventors. At one display stand, I saw a smart, slender Captain. Going from exhibit to exhibit, I tried to remember his name. But only when a group of officers and sergeants came up to him and pronounced his name-- GLUKHOV -- I remembered...

It was March of 1945. Our regiment had just liberated the small town of Rybnik. The Germans, attempting to stop the advance of the Soviet troops toward Morava Island in any way possible, were counter-attacking fiercely. In the sector of our regiment, they succeeded in penetrating the combat formation. Communications were interrupted with one battalion. A messenger was sent, then a second, then a third...

Finally, taking a radio set and two telephone operators with a coil of cable, Sergeant GLUKHOV departed. Before he had gone 800 meters toward the battalion observation point, he heard strong firing: the artillery troops were having an uneven battle with the enemy tanks which had broken through. Two cannons were silent, their crews killed.

"Behind me!" GLUKHOV commanded. Running up to one weapon, he loaded it and brought it around to the panoramic sight. The messengers were not surprised by their sergeant. They knew that their commander had previously been in the artillery.

One shot and an enemy tank was burning. The sergeant fired at a second tank, but missed. Two or three minutes more and the cannon would be destroyed. His comrades came to his aid -- the neighboring guns spoke. But at this time, an enemy mine exploded nearby. We saw the corpsmen carry off the sergeant, silent on his stretcher.

And now, I saw GLUKHOV again -- now an officer. He was discussing the installations which he had developed and constructed, which were on display.

With one of them, Ivan Stepanovich suggests the slipping contacts of potentiometric drives be tested. Another is designed for testing various differential-minimal relays. It can be used both in stationary and field conditions, even directly on an airplane without removing the relay. Tests have shown that the process of checking the relay is speeded up by two and one half times if this installation is used, the expenditure of power for the testing being reduced by a factor of ten.

The mercury manometer which GLUKHOV has modernized is also interesting. In place of the bent tube, Ivan Stepanovich suggests that two straight tubes be used, connected with a special device. This makes the usage of the manometers easier and increases their reliability. It has also become easier to repair them.

We left the exhibition together. Ivan Stepanovich told me that that

time in 1945 he came to only in the hospital. He was layed up for a long time. After the war, he served in a repair shop. He passed the examinations at the military technical school without attending classes.

We walked slowly around the streets of the city, glad to have met, remembering our wartime friends. When I mentioned the name of one of our common acquaintances, GLUKHOV suggested that we visit him. This particular comrade was in the hospital, and Ivan Stepanovich, it seemed, was a frequent guest there, and more than a guest.

"Ivan Stepanovich! Your system for oxygen distribution works marvelously," the main doctor shouted in place of a greeting, "take a look!"

Entering the ward, I saw our comrade from the front, breathing oxygen. Recognizing me, he stopped his "exercise" and showed me the device:

"He doesn't forget his friends who have fallen into misfortune."

The chief doctor, continuing the conversation, explained:

"This new device allows oxygen to be taken by the forced method if the patient is feeling poorly or is unconscious. It's also important that the oxygen is dosed carefully to the patient. Before, we used the familiar gas blanket: the patient inhaled as much oxygen as he pumped from the blanket, which was not always the right amount."

All of GLUKHOV'S rationalizer's suggestions presented at the exhibition had been recommended for introduction, and their author had been given prizes and monetary awards. He has nine such prizes, plus 53 certificates for rationalizer's suggestions.

GLUKHOV did not only talk about himself that day. He had even more to say about his comrades and the systems: Sergeant A. Pak, soldier I. Goryunov and many, many others. Still another, 54th suggestion has been adopted. The inventor dedicated this particular work to the 50th Anniversary of the Great October Revolution.

Tekhnika i Vooruzheniye, No 11, 1966, p. 83

SYMBOLS FOR SEMI-CONDUCTORS MANUFACTURED SINCE 1965
(All-Union State Standard 10862-64)

Group of Devices	Symbol Elements: First	Second	Third: Numbers	Third: Purpose Characteristics	Fourth	Examples
Diodes	G or 1=germanium, K or 2=silicon, A or 3=gallium	D-Low Frequency (50-2000Hz)	101-399	Rectifing	One of more letters indicating variety of devices depending on their parameters	
			401-499	Universal		
			501-599	Impulse		2D503B
		V-varicap	101-999			
		A-shf	101-199	Mixer		
			201-299	Video detector		
			301-399	Modulator		
			401-499	Parametric		
			501-599	Switching		
			601-699	Multiplier		
		I-tunnel	101-199	Amplifier		3I301A
			201-299	Oscillator		1I302G
			301-399	Switching		
Photo-devices		F	101-199	Diodes		
			201-299	Transistors		
Transistors		T	101-199	Low power lf		GT108A
			201-299	Low power mf		
			301-399	Low power hf		1T309D
			401-499	Moderate power lf		1T403ZH
			501-599	Moderate power mf		
			601-699	Moderate power hf		
			701-799	High power lf		
			801-899	High power mf		
			901-999	High power hf		
Multi-layered switching device		U=controlled N=uncontrolled	101-199	Low power		
			201-299	Medium power		
			301-399	High power		
Stabilizers		S	101-199	Low power, ΔU_{st}=1-9.9v		2S168A
			201-299	Low power, ΔU_{st}=10-99v		
			301-399	Low power, ΔU_{st}=100-199v		
			401-499	Medium power, ΔU_{st}=1-9.9v		
			501-599	Medium power, ΔU_{st}=10-99v		
			601-699	Medium power, ΔU_{st}=100-199v		
			701-799	High power, ΔU_{st}=1-9.9v		(P=reverse polarity)
			801-899	High power, ΔU_{st}=10-99v		
			901-999	High power, ΔU_{st}=100-199v		2S980AP
Rectifier stacks		T_s	101-199	Low power		
			201-299	Medium power		
			301-399	Low power		
			401-499	Medium power mf		
			501-599	High power		

NOTE: Low frequencies are those below 3 MHz; medium frequencies are from 3 to 30 MHz; high frequencies are from 30 to 300 MHz; low powers are < 0.3w; medium powers from 0.3 to 3w; high powers > 3w.

Tekhnika i Vooruzheniye, No 11, 1966, p. 92

T AND A CONSULTATION

By Engineer Colonel V. ZHIKH

In repairing equipment and in the creation of teaching aids it is often necessary to write on metal. The best and simplest way to do this is described by Engineer Colonel V. ZHIKH.

Signs, tables and circuits can be inscribed on metal best using the photochemical method, which is relatively simple and can be performed in any military unit.

In order to reproduce an image on steel, copper, brass, aluminum or duraluminum plates, a negative is required. The negative is made on tracing paper (with India ink) or on photographic film (by photography). The negative is pressed tight against one side of the plate, which must be covered with a light-sensitive emulsion and is exposed as in ordinary photographic contact printing.

When photographic printing is performed by the contact method without etching (Table 1) a flat image is produced. An image with relief (convex) can also be produced. In this case the first four operations must be performed as described in Table 1, then all operations indicated in Table 2 must be performed. A light, convex positive image will be produced against the deep black background of the plate.

Table 1

Number and Name of operation	Technical conditions, materials, tools and devices required
1. Clean slate, remove oil and dry.	Sandpaper, aviation gasoline, French chalk, cold running water, fan.
2. Apply light sensitive emulsion (in darkroom)	Centrifuge (disk and record player mechanism), emulsion: ammonium dichromate with ammonia (10%)-120 cm^3/l and egg white (beaten and settled)--100 cm^3/l. Rotate disk for 2-3 minutes at 20-30 rpm.
3. Remove plate from disk and dry light sensitive layer.	Drying cabinet with t=50-60°C.
4. Transfer image to plate by contact printing.	Film or tracing paper, 500-1000 w lamp, mount -- 5-6 minutes.
5. Wash plate in water.	T=75-80°C, duration 0.5-1 min.
6. Place plate in aniline dye.	T=75-80°C, time=1-1.5 min.
7. Wash and dry.	Cold running water, fan.
8. Shine.	Mixture of drying oil (one part) and turpentine (five parts).
9. Dry.	Drying cabinet, 3 hours. Gradually increasing temperature from 40 to 180°C.
10. Cut plate ou around image and rub with oil.	Shears, cloth, machine oil.

Table 11

Number and Name of operation	Technical conditions, materials, tools and devices required
1. Apply thin layer of dye to emulsion layer.	Lithographic transfer dye, rubber roller.
2. Place plate in water.	Warm water bath, cloth. Layer of lithographic dye is rubbed carefully with cloth. Emulsion not fixed on unexposed portions, dissolved in water and runs off of plate surface with dye.
3. Dry	Fan.
4. Dust face of plate, then blow talcum off of sectors with no emulsion.	Rosin powder with talcum.
5. Heat plate.	Electric hot plate. Heat until rosin melts.
6. Etch.	Steel plate -- in 25% solution of nitric acid or 30% solution of hydrochloric acid; copper or brass plate -- in solution of chromic anhydride (300 g/l) and ammonium sulfate (100 g/l), aluminum-- in 10% solution of caustic soda or 40% solution of iron chloride.
7. Wash in water and remove deposit formed.	From copper and brass plates -- by solution of potassium dichromate (200 g/l) and sulfuric acid (200 cm^3/l), from aluminum plates -- by chalk paste with ammonium hydroxide.
8. Wash plate in water, dry and cover with solution.	Cold running water, fan, alcohol solution of shellac with 3-5% nitrozine.
9. Dry.	Electric hot plate.
10. Remove dye.	Kerosene bath.

Tekhnika i Vooruzheniye, No 11, 1966, p. 93

PHILOSOPHICAL PROBLEMS OF TECHNOLOGY

By V. Samarin

The "Znaniye" Publishing House in Moscow is publishing a popular scientific and technical library under the general heading Philosophical Problems of Technology. This series of small brochures is primarily designed for specialists with engineering and technical training, but is also readable for a wide range of readers.

A primary task of the series is the popularization of scientific and technical knowledge. The brochures cover both general problems of dialectics of the development of science and technology and concrete problems of the close interconnection and interconditionality of science and technology. The following brochures have already been published: A. A. ZVORYKIN, *Filosofiya i Nauchno-tekhnicheskiy Progress* [Philosophy and Scientific-Technical Progress] (1, 1965, 48 pages); R. P. POVILEYKO, *Estetika i Tekhnika* [Esthetics and Technology] (No 2, 1965, 32 pages). As an appendix to this issue, an article by D. MIKHAYALOV, "The Theory and Practice of Technical Esthetics" is presented; A. I. CHEREPNEV, *Avtomatizatsiya Segodnya i Zavtra (Tekhnicheskiye i Sotsial'-no-Ekonomicheskiye Problemy Avtomatizatsii)* Automation Today and Tomorrow (Technical and Social-Economic Problems of Automation) (No 3, 1965, 48 pages); V. P. ZINCHENKO and G. L. SMOLYAN, *Chelovek i Tekhnika (Sistemy Upravleniya i Inzhenernaya Psikhologiya)* [Man and Equipment (Control Systems and Engineering Psychology) (No 4, 1965, 48 pages); V. M. GLUSHKOV, *Myshleniye i Kibernetika* [Thought and Cybernetics] (No 5, 1966, 32 pages); V. V. CHAVCHANIDZE and O. Ya. GEL'MAN, *Modelirovaniye v Nauke i Tekhnike (Kibernetcheskiye Aspekty Modelirovaniya)* [Modelling in Science and Technology (Cybernetic Aspects of Modelling)] (No 6, 1966, 32 pages); Ye. S. SERGEYEV, *Dialektika Nauchnogo Poznaniya Myshleniye Inzhenera* [Dialectics of Scientific Consciousness and the Thought of the Engineer] (No 7, 1966, 64 pages).

These brochures analyze the philosophic aspects of scientific and technical development and the social problems of the contemporary scientific and technical revolution. A great deal of attention is turned to technical esthetics, its practice, theory and its connection with economics. Certain problems of automation, its role in industry, the interconnection of man with equipment and the significance of engineering psychology are also analyzed. In some brochures, a list of additional literature which may interest the reader desiring a deeper knowledge of the theme is presented.

Tekhnika i Vooruzheniye, No 11, 1966, p. 93

PROBLEMS OF MISSILE EQUIPMENT

By Yu. Voronov

"Problems of Missile Equipment" -- this is the name of a journal in which translations of foreign articles and reviews of various problematic questions of missile equipment and space science are published: the design and operation of rocket motors, aerodynamics, heat transfer, flight mechanics, and control are the subjects of these articles. The course and results of investigations, developments, experiments and the usage of missile and space equipment abroad are described. All materials in the journal are divided into the following sections: The Missile Complex; Motor Installation; Control of the Flight and of Equipment and Missile Equipment News.

Individual issues of this journal are thematic. For example, the 7th issue of 1966 was dedicated to motors and fuel. It contains an analysis of a hydrogen-oxygen motor, news of the development of a controllable low thrust liquid motor, an experimental investigation of the process of combustion and secondary start-up of hybrid rocket motors.

The 8th and 9th issues contain a review on the influence of the flame of a rocket motor on radio communications with the missile. The current state of the problem and results of theoretical, experimental and flight investigation of missiles are presented.

The pages of this journal present the results of investigations and developments of plasma, ion and neuclear motors, power installations for contemporary and future spaceships, life support systems and spacesuits, inertial and combined navigation systems and their elements.

A number of articles are dedicated to problems of providing reliability of missiles, their systems and individual units, the dynamics and aerodynamics of piloted and pilotless vehicles, existing and future materials for missile and spaceship construction.

The journal is designed for engineers and scientific workers working in the area of aircraft and missile construction but will doubtless be interesting for the military reader.

This journal can be subscribed to through the press representatives in military chast', military schools and in all divisions of SOYUZPECHAT. The index of the journal is 70803, the price of an individual issue is 56 kopecks.

Tekhnika i Vooruzheniye, No 11, 1966, pp. 94-95

TECHNOLOGY AND ARMAMENT IN 1967

In the next year, the Anniversary year for our fatherland, this journal will widely popularize the positions of the program of the CPSU, the decisions of the XXIII Congress of the CPSU, directed toward the realization of the primary economic task of the new five year plan, strengthening of the armed might of the Soviet State. Articles will be published on problems of the influence of economics on the development of armament and military equipment, engineering psychological problems arising in the utilization of military equipment and the training of specialists, military-economic training of officers, and tendencies in the development of all types of military equipment and weapons.

Considerable attention will be turned to populatization of socialist competition in the Army and Navy, to demonstration of the work of the best commanders and engineers, political organs and party organizations in indoctrinating highly qualified specialists, to instilling a love for equipment and armament in the personnel, as well as confidence in success of the application of this equipment and armament in armed combat.

This journal will regularly publish materials designed to aid in indoctrination of the troops in the revolutionary traditions of the CPSU and the combat traditions of our Army and Navy, thematic selections dedicated to the 50th Anniversary of Soviet Power and the Soviet Armed Forces. Historical and revolutionary events illustrating the role of the communist party, its founders and its leader V. I. Lenin in solution of the problems of building of the military, supplying of the Army and Navy will be publicized. The primary stages in the development of military technical though, the influence of the technical re-equipping of the Army and Navy on the basic positions of Soviet military science will be demonstrated. Examples of the combat mastery, bravery and heroism of Soviet soldiers in their battles for the fatherland will be presented.

Materials popularizing front rank experience in accident-free employment of equipment and weapons, the introduction of the principles of scientific organization of labor, utilization of the latest achievements of science and technology, the newest materials and technological processes in the organization of maintenance and repair of combat equipment and the struggle for material economy will have a significant place in this journal next year.

The journal will summarize the experience of the best methodologists and organizers of drills on technical training, training of repair workers, improvement of the field skills of technical and repair podrazdeleniye. The journal will indicate methods for improving technical training of all types of servicemen and will popularize front rank methods of military technical propoganda, showing in this connection the role of the officers and enlisted men's clubs and chast' and ship libraries. Military and technical literature will be described.

The pages of this journal will inform our readers of the development of the training equipment base, the creation of various trainers, equipment for field training, classes, firing ranges, tank driving ranges, and naval training areas. The creativity of Army and Navy rationalizers and inventors will be widely popularized, as will be the experience of introduction of technical innovation presented at the Exhibition of Achievements of the National Economy of the USSR.

The themes listed below will be presented in the main divisions of the journal.

Armament, Equipment, Apparatus.

Tendencies in the development of the primary types of military equipment (missile, aviation, electronic; individual weapons and artillery; naval equipment and weapons; tank and tractor equipment; special forces equipment).

In the area of a nuclear explosion (the effect of contaminating factors resulting from a nuclear explosion on metals, materials, units and elements of military equipment; methods for performing operations in the servicing and repair of equipment in high radiation areas; equipment, methods and approaches for specialized processing).

Aggregates, units and elements of equipment and weapons of all the armed forces; the physical nature of processes occurring in them. Articles to aid those studying the equipment and weapons.

Man and modern combat equipment. A group of psychological and pedagogical articles.

Technical training. The training equipment base.

A group of methodological articles to aid young officers organizing technical and special training of personnel (methodological approaches for studying complex equipment; methods for using trainers; the methodological principles of programmed learning; training of specialists for night operations; psychological problems of training specialists; organization of question and answer periods, technical quizzes, clubs and conferences).

Technical training of the officers (organization of independent study of equipment; work with the technical literature and information material; group practical drills, training using the equipment).

Equipping classes, training fields, firing ranges, tank driving ranges, motor vehicle driving ranges, equipment operating areas, engineering and chemical training areas. The usage, servicing and repair of equipment (summarizing the front rank experience of the troops).

Utilization of motion picture, slide and recording equipment in the training process. Amateur motion picture photography.

Utilization, Maintenance and Repair.

Increasing the readiness of equipment and weapons for combat usage; reduction of the norms of combat operations (automation of checking and troubleshooting; organization of adjustment operations; servicing of equipment by reduced crews; improvement of technological plans for preparation of equipment; fast starting of motors).

Scientific organization of labor (NOT) in the usage, maintenance and repair of combat equipment. A group of articles with recommendations on the introduction of the basic fundamentals of NOT to the troops (organization of the working location; safety measures, methods and approaches for performing operations; supplies and tools; the work-rest cycle; network planning and control (SPU); experience in the introduction of NOT).

Accident prevention (predicting failures and instrument control; discipline and equipment; periodic inspections and servicing; safety in driving).

Reliability of equipment and armament. A group of theoretical and practical articles for specialists of all the armed forces.

Usage of the equipment under unusual conditions (in mountains; in the far north; in hot and humid climates; in deserts; under night conditions).

Organization of servicing of all types of equipment and weapons under field and stationary conditions. Motor pools, pool equipment and technical maintenance equipment, pool servicing, pool days: the experience of work of technical control points.

Anti-corrosion protection and conservation of military equipment (protective coating; organization of storage and removal from storage; the experience of storage under various conditions).

Organization of repair of all types of equipment and weapons under stationary and field conditions. Repair of warships and merchant ships in docks and at sea. Moveable repair equipment.

Introduction of the achievements of science and technology and leading technological approaches, new materials.

The work of missile engineer, aviation engineer, armored, tractor and other services. Technical combat supply (plans, equipment supply; network control methods).

The creativity of inventors.

Exchange of experience in the operation of commissions on invention. Consultations, statements and advice for beginning inventors. Stories by experienced inventors. Information on the best work of rationalizers and inventors. Information for inventors.

Achievements of science and technology.

Realization of the decisions of the XXIII Congress of the CPSU. Articles on the greatest scientific and technical problems. Reports from the VDNKH, from scientific research institutes and design bureaus, interviews with famous scientists.

About our friends.

Appearances by military leaders and specialists of the armies of our friends, telling of their experience in the usage, maintenance and repair of military equipment. Reviews of military and scientific-technical journals of the armies of the socialist countries.

Beyond the borders of the socialist camp.

Articles on the development of production of military equipment, the armament of the armies and navies of the capitalist countries. Commentaries on budget and military-technical policies. Foreign military and technical information.

Critiques and Bibliography.

Reviews and annotations of military technical and scientific-technical literature, reviews of domestic and foreign military technical periodicals.

For your spare time.

The history of our domestic military equipment and weapons (from the pages of rare books; from the halls of museums and exhibitions). Quizzes, contests, applied problems. Chess. Technical sports.

Tekhnika i Vooruzheniye, No. 11, 1966

TABLE OF CONTENTS

Page

LEAD ARTICLES

Glory to the Great October! 2
The Goal Must be Reached, by Engineer-Lieutenant Colonel Ye. SIMAKOV 6
Arms and the Revolution, by Engineer-Captain 2d Rank V. DEM'YANOV 14

ARMAMENT, EQUIPMENT, DEVICES

Single Side Band Radio Communications, by Engineer-Colonel V. YAGODIN 22
Using Alternating Current, by Engineer-Major N. MIKHEYEV 32

TECHNICAL TRAINING

Classes in the Yard, By Engineer-Colonel A. TOKAREV 38
The Norms are not Goals in Themselves, by Colonel M. PERVUKHIN 43

OPERATION, MAINTENANCE, REPAIR

Organizational Repair Shops, by General Major of Engineering and Technical Service A. KONDRATENKO 45
An Inhibiting Additive, by Engineer-Lieutenant Colonel M. LEVITIN 51
The Theme: Corrosion, by M. Pavlov, ... 54
Preparation for Storage, by Engineer-Lieutenant Colonel N. KUDRYAVTSEV 58
Glowing Front Sight, by Major M. GERMANEK and Major G. MARTEN 60
Checking the Calibration of the R-405, by Engineer-Lieutenant Colonel A. KUZNETSOV 62
The Mobile Shop, by Engineer-Colonel P. ANLPATOV and Engineer-Major V. LEBEDEV 67
Checking Balancing, by L. Novitskiy, Candidate of Technical Sciences 71
Driving on Slippery Roads, by Reserve Engineer-Colonel M. PARSHIN 74
Without Accidents or Breakdowns, by O. Gorov and F. Levshin 77

SCIENCE IN PRODUCTION

Controlled Thermonuclear Reactions, by L. Luk'yanov, Doctor of Physical-Mathematical Sciences, Professor, Lenin and State Prize Winner 81

INNOVATOR CREATIVITY

The Minimum Award, by Engineer-Colonel N. SCHASTNYY 93
A New Stand, by Engineer-Lieutenant Colonel L. VOLOSHIN and Captain A. TSYBUL'NIK 95

Experience and Initiative 98
Good Service, Vladimir, by Engineer-Major Ye. PATEYUK 106
Always Searching, by Colonel I. DEGTYAREV 110
Symbols for Semi-Conductors Manufactured Since 1965 112

OUTSIDE THE SOCIALIST CAMP

T and A Consultation, by Engineer-Colonel V. ZHIKH 113

IN THE WORLD OF BOOKS

Philosophical Problems of Technology, by V. Samarin 115
Problems of Missile Equipment, by Yu. Voronov 116
Technology and Armament in 1967 117

RECEIVED
MAY 15 196
CFST