AD 650 036

NAVY DEPARTMENT
DAVID TAYLOR MODEL BASIN

HYDROMECHANICS

AERODYNAMICS

STRUCTURAL MECHANICS

APPLIED MATHEMATICS

HYDRODYNAMIC DESIGN AND EVALUATION OF A SIZE 5 REINFORCED-PLASTIC MINESWEEPING FLOAT

by

Peter K. Spangler

Distribution of this document is unlimited.

DDC
RECEIVED
APR 26 1967
C

APRIL 1960 REPORT 1422

ARCHIVE COPY

HYDRODYNAMIC DESIGN AND EVALUATION OF A SIZE 5 REINFORCED-PLASTIC MINESWEEPING FLOAT

by

Peter K. Spangler

APRIL 1960

REPORT 1422
S-R007-03-04

TABLE OF CONTENTS

	Page
ABSTRACT	1
INTRODUCTION	1
DESCRIPTION OF THE PLASTIC FLOAT	1
CIRCULATING WATER CHANNEL TESTS	8
SEA TRIAL	8
CONCLUSIONS	17
REFERENCES	18

LIST OF FIGURES

		Page
Figure 1 -	Steel, 0 Type, Size 5 Minesweeping Float	2
Figure 2 -	Size 5 Reinforced-Plastic Minesweeping Float, Side View	5
Figure 3 -	Size 5 Reinforced-Plastic Minesweeping Float, Oblique View	6
Figure 4 -	Schematic of the Plastic Float	7
Figure 5 -	Schematic of Towing Configuration in the Circulating Water Channel	9
Figure 6 -	Plastic Float Under Tow in the Circulating-Water Channel at a Speed of 5 Knots	10
Figure 7 -	Comparison of Hydrodynamic Lift of Plastic and Steel Floats	11
Figure 8 -	Comparison of Hydrodynamic Drag of Plastic and Steel Floats	12
Figure 9 -	Schematic of Towing Configuration at Sea	13
Figure 10 -	Plastic Float Under Tow at Sea	14
Figure 11 -	DTMB Knotmeter, Mark II	16

LIST OF TABLES

		Page
Table 1 -	Nondimensional Body Offsets of the Plastic Float	3
Table 2 -	Comparison of the Size 5 Plastic Float and the Standard 0 Type, Size 5, Steel Float	4

ABSTRACT

An 0 Type, Size 5, Reinforced-Plastic Minesweeping Float was designed and fabricated at the David Taylor Model Basin. Tests were conducted in the Circulating Water Channel to determine the net buoyancy, lift, drag, and towing characteristics. Tests to verify towing characteristics were also made using a small boat in the Chesapeake Bay. After modifications to towpoint and control surfaces, the float towed in a stable manner over the speed range of 0 to 7 knots. It is concluded that a Size 5 Minesweeping Float fabricated from plastic will have satisfactory towing characteristics and will allow a substantial reduction in the handling weight.

INTRODUCTION

The Bureau of Ships requested[1] the David Taylor Model Basin to evaluate the performance of a Size 5, Reinforced-Plastic Minesweeping Float. The purpose of this project was to develop a plastic float to replace the steel, 0 Type, Size 5 Float which is a component of the 0 Type, Size 5 Sweep described in Reference 2.

Recently, the Bureau of Ships has become interested in the use of the filament-winding process to construct fiberglas -reinforced-plastic floats.[3] Some expected advantages are lighter weight, lower cost, greater strength, improved quality control, increased corrosion resistance, and easier handling in operational use. To facilitate the use of the filament-winding process, it was found necessary to modify the basic body design of the float.[4, 5, 6] Therefore, the Model Basin conducted tests to determine the net buoyancy, lift, drag, and towing characteristics of the resulting design.

This report presents the results of the hydrodynamic tests conducted both in the Circulating Water Channel at the Model Basin and in the Chesapeake Bay. Data comparing the physical dimensions and hydrodynamic characteristics of the plastic float and a standard steel float are presented. A description of the various modifications which led to the plastic float design is included. This report should contain sufficient information to determine the suitability of this float for other applications.

DESCRIPTION OF THE PLASTIC FLOAT

Two appendage arrangements of the plastic float were tested. The first had a towbail, flagstaff, and horizontal tail similar to the steel float shown in Figure 1. Table 1 gives the nondimensional body offsets of the plastic float. When completely submerged, the float assumed a trim angle

---

[1] References are listed on page 18

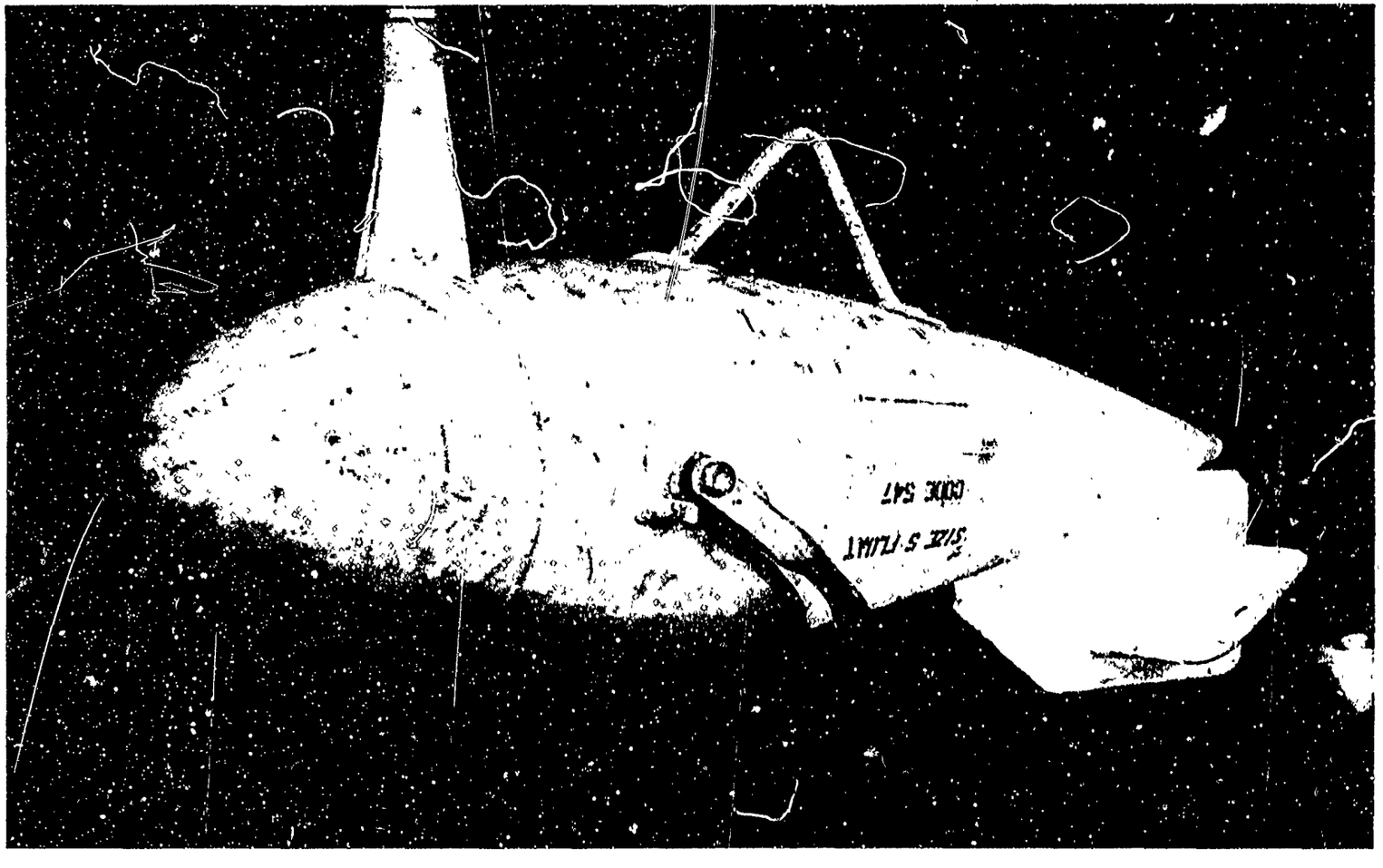

PSD 97736

Figure 1 - Steel, 0 Type, Size 5 Minesweeping Float

TABLE 1

Nondimensional Body Offsets of the Plastic Float

X/L	Y/L
0	0
0.05	0.081
0.10	0.095
0.20	0.111
0.30	0.118
0.36*	0.120
0.40	0.119
0.50	0.114
0.60	0.105
0.70	0.092
0.80	0.077
0.90	0.059
0.95	0.049
1.00	0
Nose radius = 0.089L	
Tail radius = 0.039L	
* Location of Maximum Diameter	

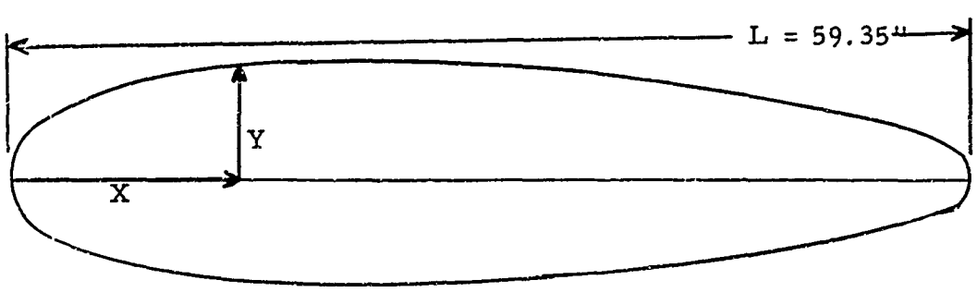

of approximately 75 degrees nose-down with the towbail resting against the forward stops. At speeds of 1, 2, and 3 knots, the corrective forces developed by the horizontal tail were insufficient to overcome the nose-down moment caused by the location of the towpoint forward of the center of buoyancy. In addition, the vertical tail was insufficient to overcome the unstable yawing moment caused by the location of the flagstaff forward of the towpoint.

Since the first arrangement was not satisfactory, several modifications were made to correct these difficulties. The towpoint was moved to a point 24.8 inches aft of the nose. The towbail was replaced with a drilled plate attached at the bottom of the body. Allowance was made for fore and aft adjustment of the towpoint. The flagstaff was moved to a point 41.5 inches aft of the nose. The 1.25-inch diameter wooden flagstaff was replaced with a tapered fiberglas whip antenna, 0.5 inch in diameter at the large end. The whip antenna screws into a commercially available threaded socket bonded into the body. The lifting eye on top of the body was moved to a point above the center of gravity so the body would trim level in air when handled from this point. The curved horizontal tail was replaced with a flat plate and allowance was made for adjustment of the incidence angle. The span of the tail was reduced from 10 inches to 8 inches to make the pitch angle less sensitive to changes in incidence angle of the tail. The modified float is shown in Figures 2, 3, and 4. The physical dimensions of the modified plastic float and the steel float are compared in Table 2. Data concerning the steel float were obtained from References 2 and 7.

TABLE 2

Comparison of the Size 5 Plastic Float and the Standard 0 Type, Size 5, Steel Float

Dimension	Plastic Float	Steel Float
Overall length, inches	64 3/4	64 7/8
Maximum diameter, inches	14 1/4	16
Horizontal tail area, inch^2	106	136 1/4
Weight in air, pounds	42	90
Reserve buoyancy, pounds	171	202

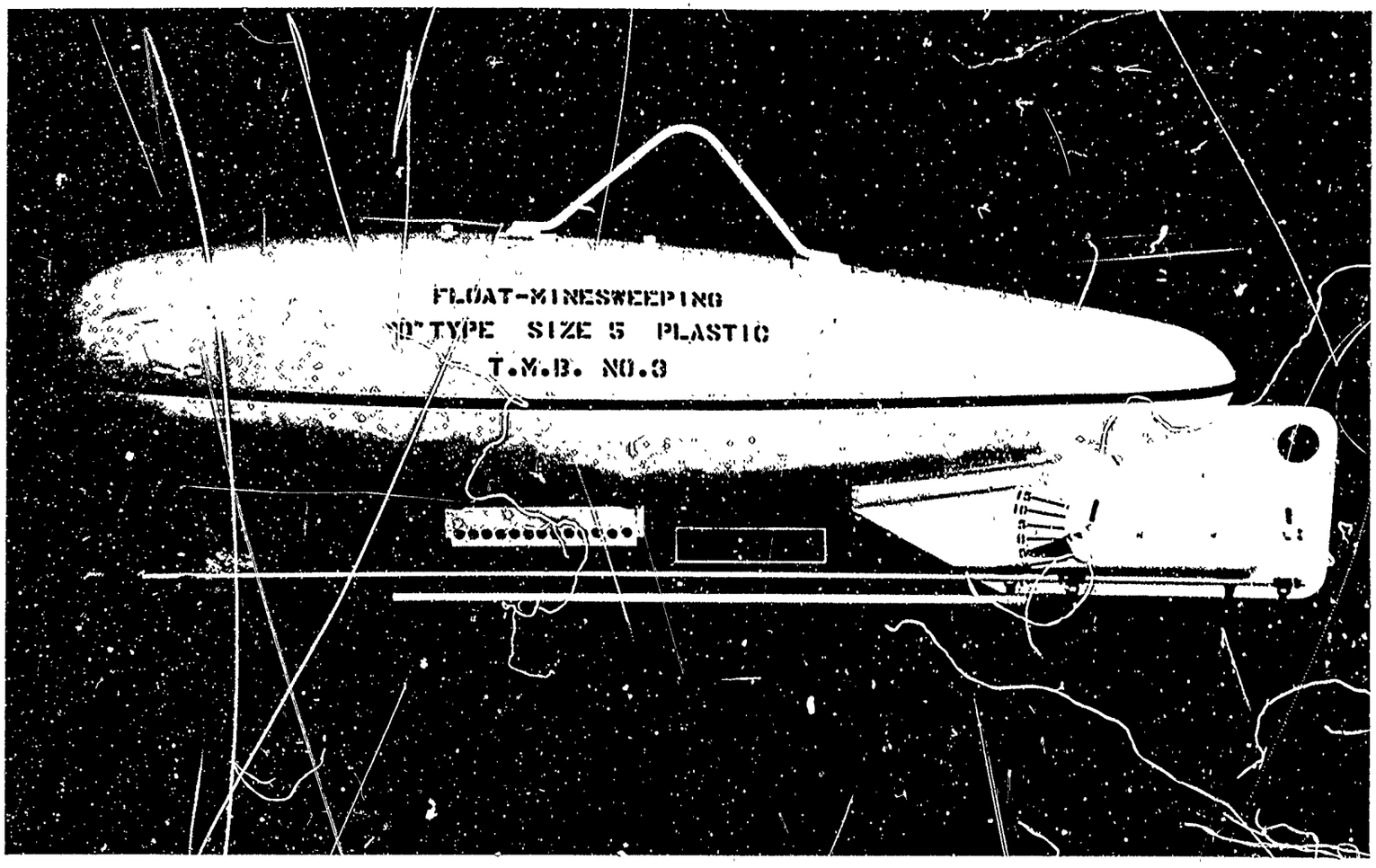

PSD 96840

Figure 2 - Size 5 Reinforced-Plastic Minesweeping Float, Side View

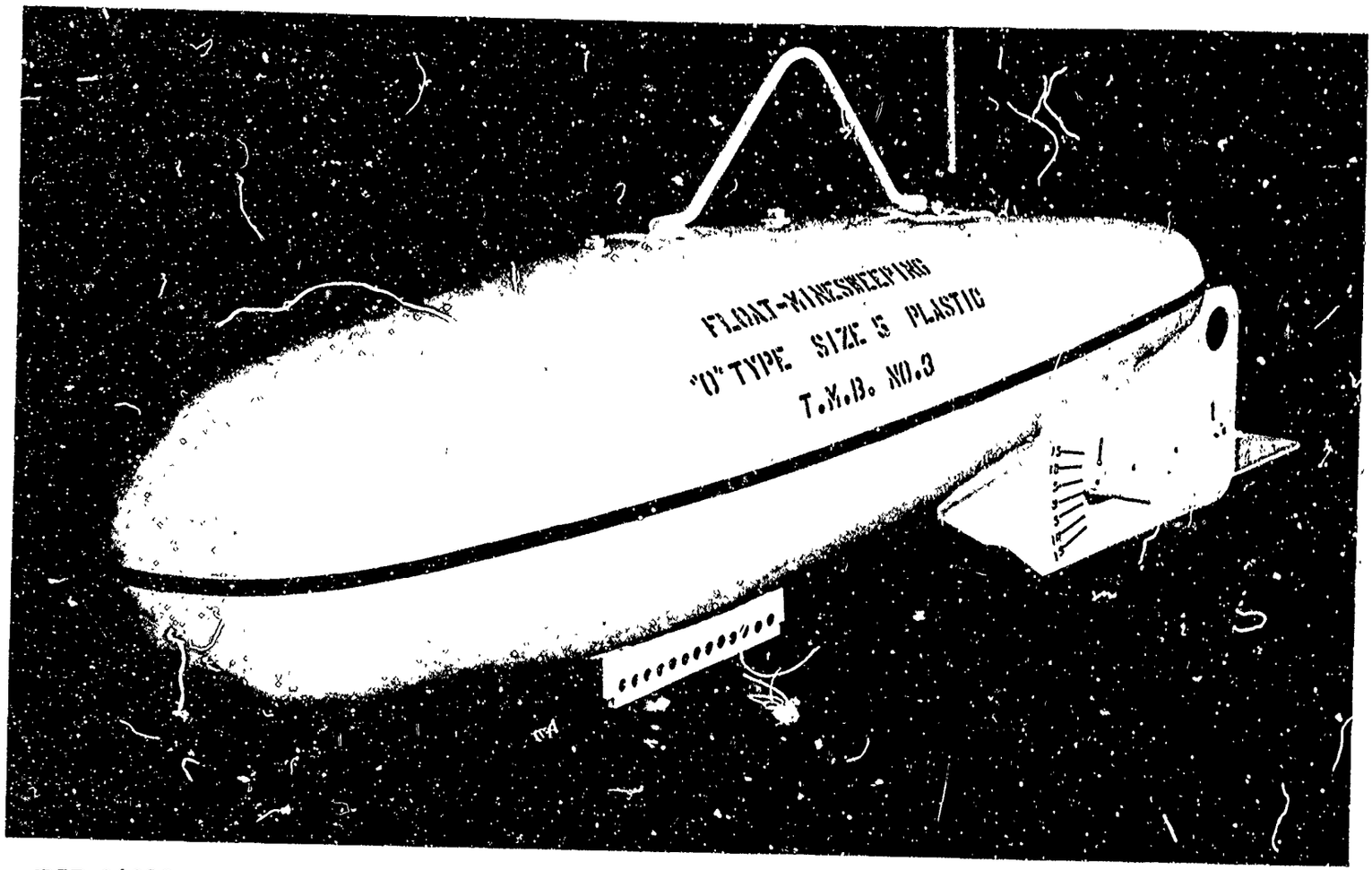

PSD 96838

Figure 3 - Size 5 Reinforced-Plastic Minesweeping Float, Oblique View

59.35

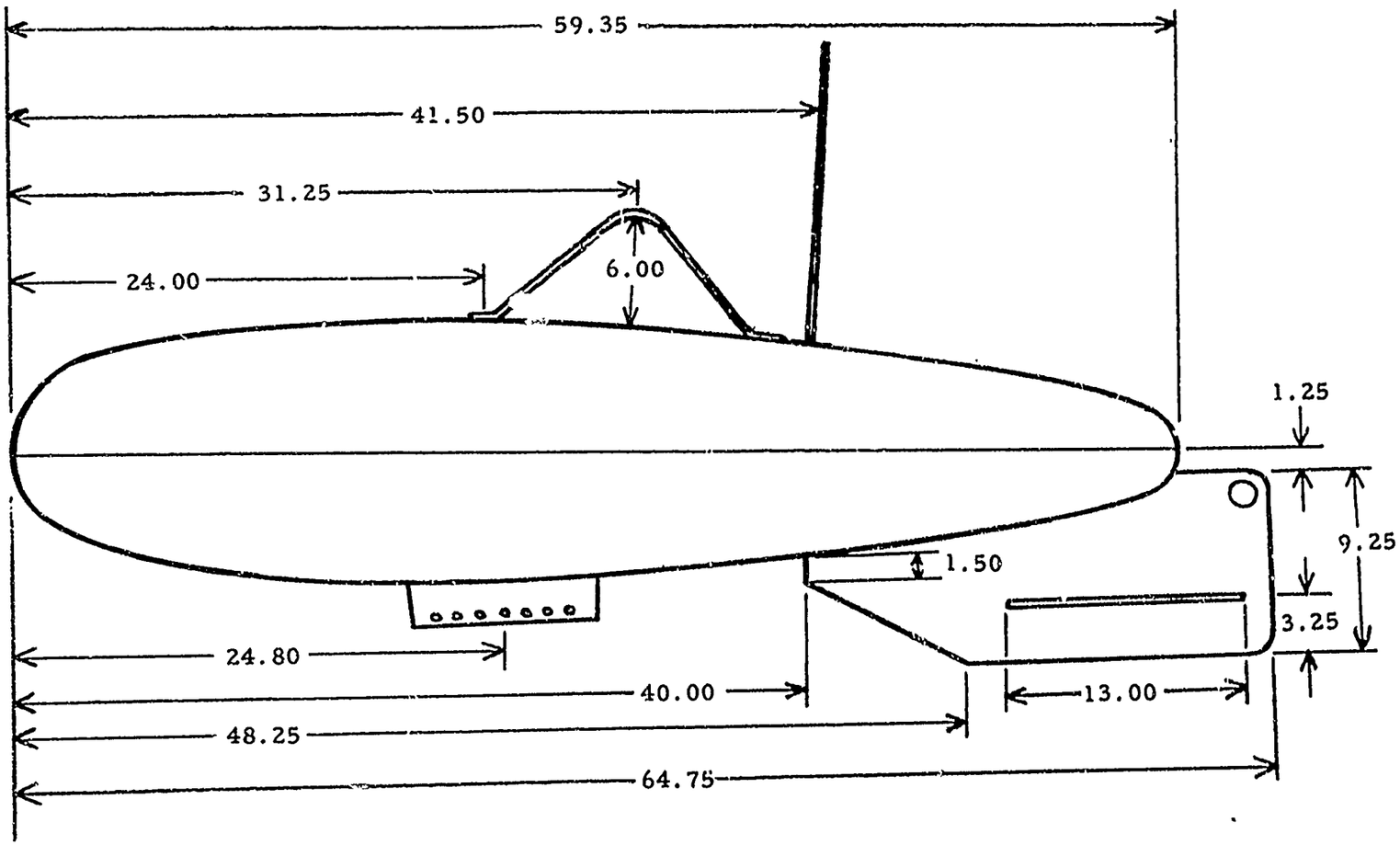

Dimensions in inches

Figure 4 - Schematic of the Plastic Float

CIRCULATING-WATER CHANNEL TESTS

The float was tested in the Circulating Water Channel in the 0 to 7 knot speed range. A sketch of the towing configuration is shown in Figure 5. A water depth of 7 feet was available. Tension measurements were made with an SR 4 Baldwin Load Cell inserted in the tow cable and recorded on a Brown Strip-Chart Electronik Recorder. Towline angle measurements were made from photographs of the float taken through a window in the side of the channel. The tension and angle measurements were taken at various speeds with the top of the float approximately 1 foot below the water surface. The float was towed on 3/16-inch diameter cable from a towpoint on the channel floor. The cable scope could be varied while under tow.

The float trimmed zero in water at rest. The horizontal tail incidence angle was varied at different speeds to determine the angle that gave the best towing performance. Since an angle of zero degrees gave the best overall results, the tail was set at zero incidence for the remainder of the test program. The float towed in a stable manner throughout the speed range of 0 to 7 knots. It was allowed to come to the surface and was then pulled under to a depth of approximately 1 foot, at all speeds, without adversely affecting the towing characteristics. The float is shown under tow in Figure 6. The straight line in the upper half of the photograph is the horizontal reference.

The tension force, determined from the Circulating Water Channel tests, was resolved into its components normal and parallel to the stream to obtain the required values of lift and drag. These data are presented in Figures 7 and 8 along with similar data available for the steel float.[7]

SEA TRIAL

The float was towed from a 30-foot boat in the Chesapeake Bay under simulated operating conditions. As shown schematically in Figure 9, the towing configuration consisted of the float which was towed on 15 feet of 3/16-inch diameter cable from a streamlined towed weight which in turn was towed on 100 feet of 1/2-inch diameter cable by the boat. The towed weight weighed 87 pounds in water and was used to simulate minesweeping gear. A heavier weight would have simulated actual conditions more closely but it could not be handled easily on this boat. A cloth pennant was attached to the top of the 9.5-foot whip antenna for marking purposes.

The float towed in a completely stable manner up to the maximum speed of the boat which was about 7.2 knots with all the gear in tow. The float is shown under tow at sea in Figure 10. The speed was measured with the DTMB Knotmeter, Mk II, shown in Figure 11. It is felt that higher speeds could have been reached without affecting the performance of the float. The boat was maneuvered through tight turns and figure-eight maneuvers at

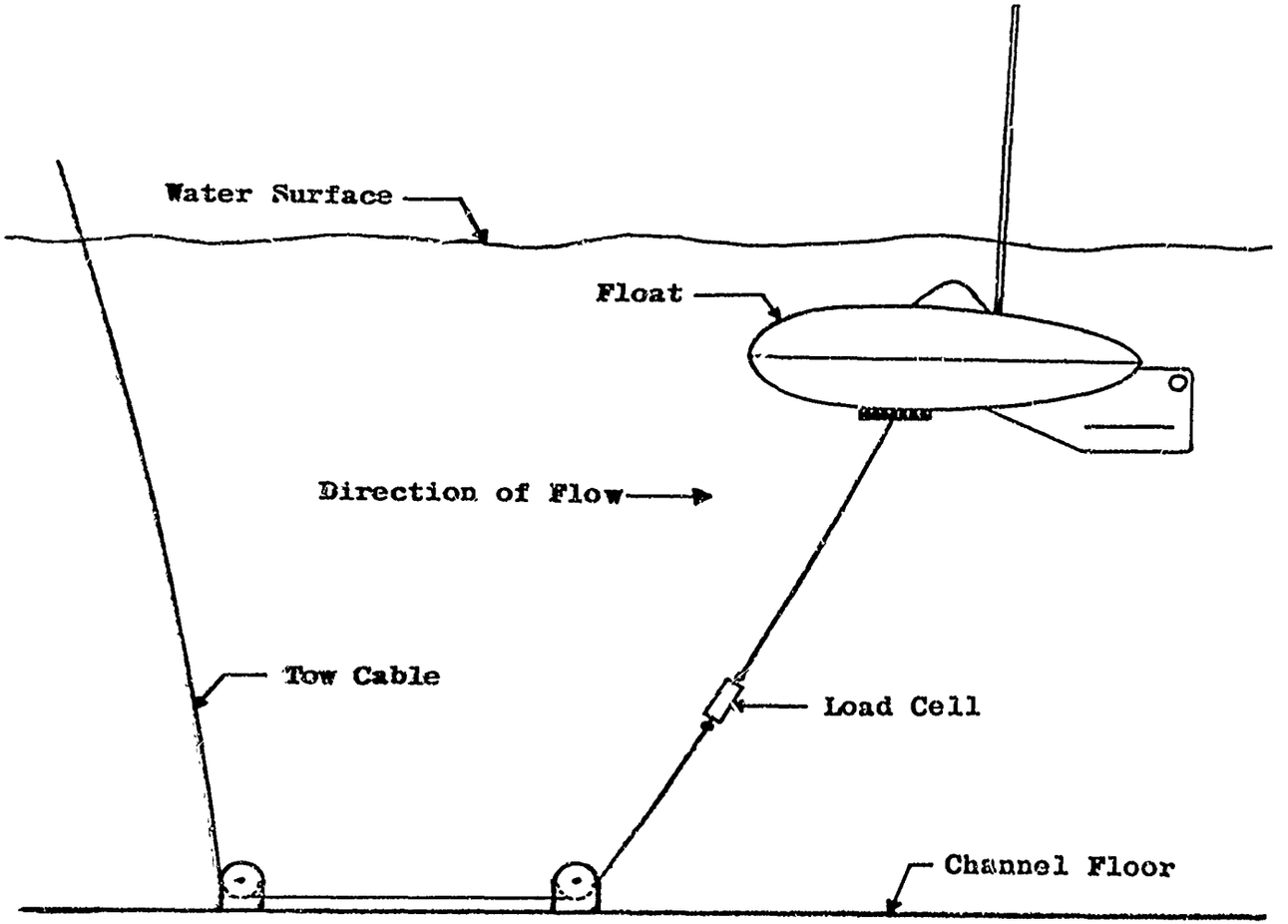

Figure 5 - Schematic of Towing Configuration in the Circulating Water Channel

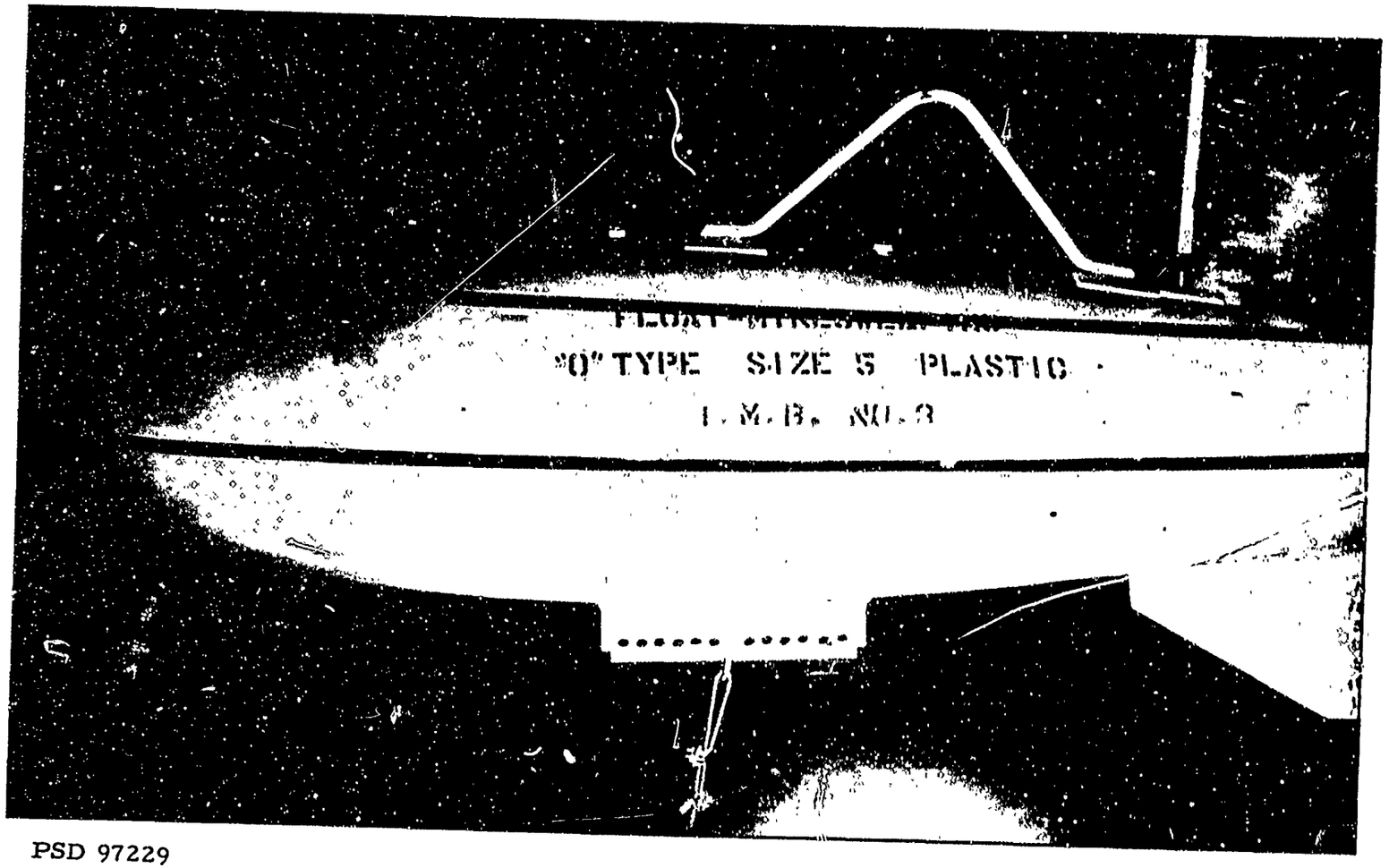

PSD 97229

Figure 6 - Plastic Float Under Tow in the Circulating Water Channel at a Speed of 5 Knots

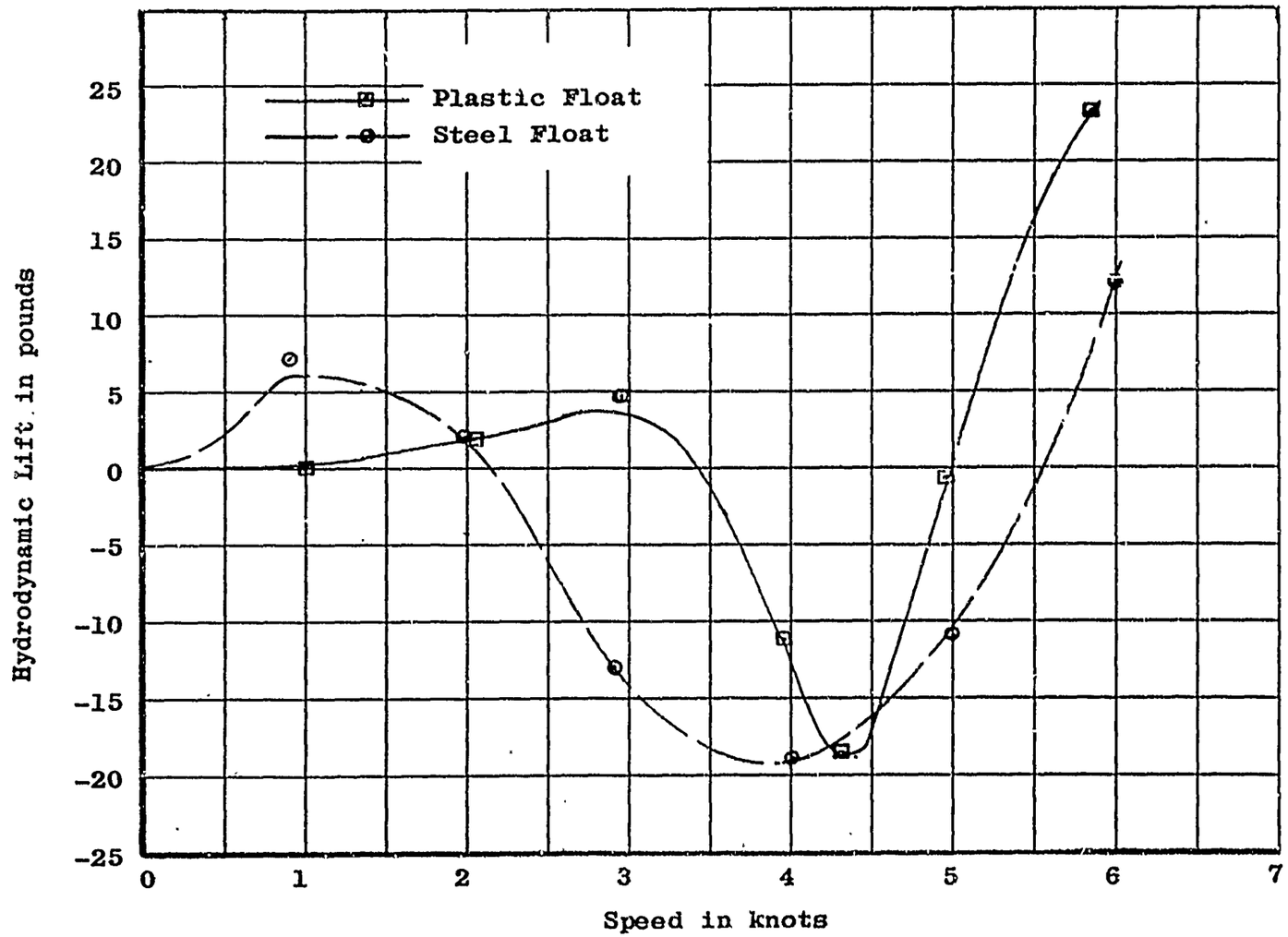

Figure 7 - Comparison of Hydrodynamic Lift of Plastic and Steel Floats

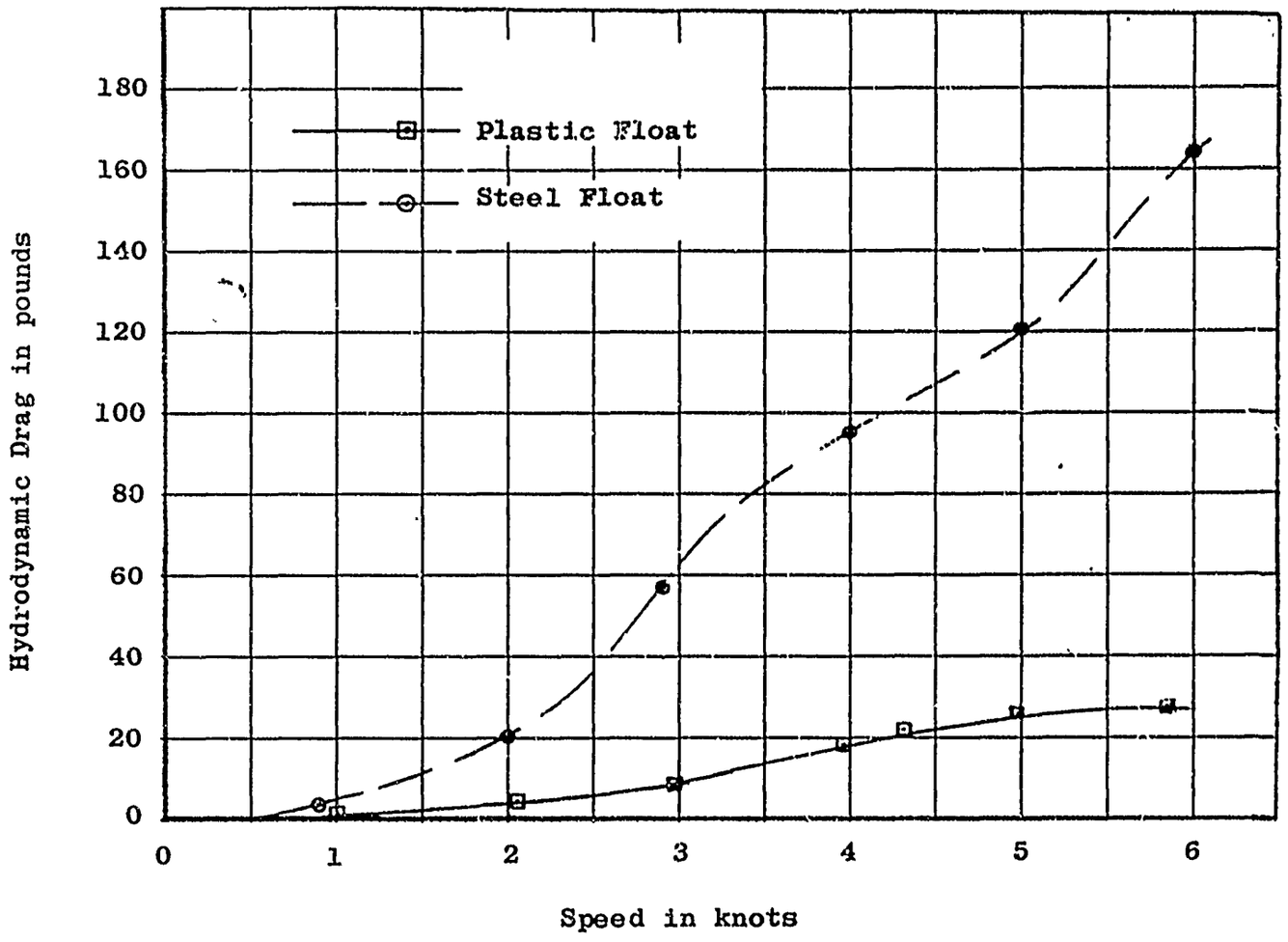

Figure 8 - Comparison of Hydrodynamic Drag of Plastic and Steel Floats

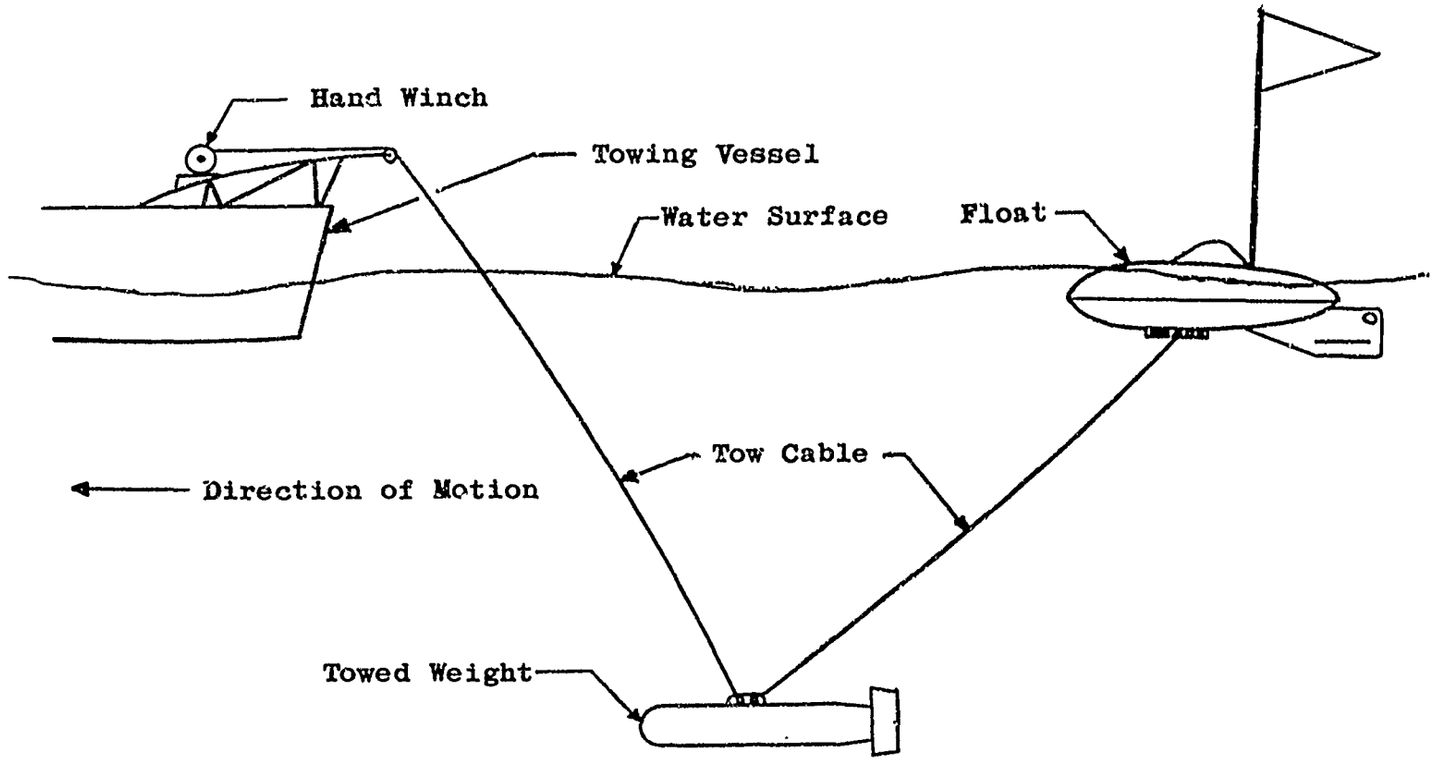

Figure 9 - Schematic of Towing Configuration at Sea

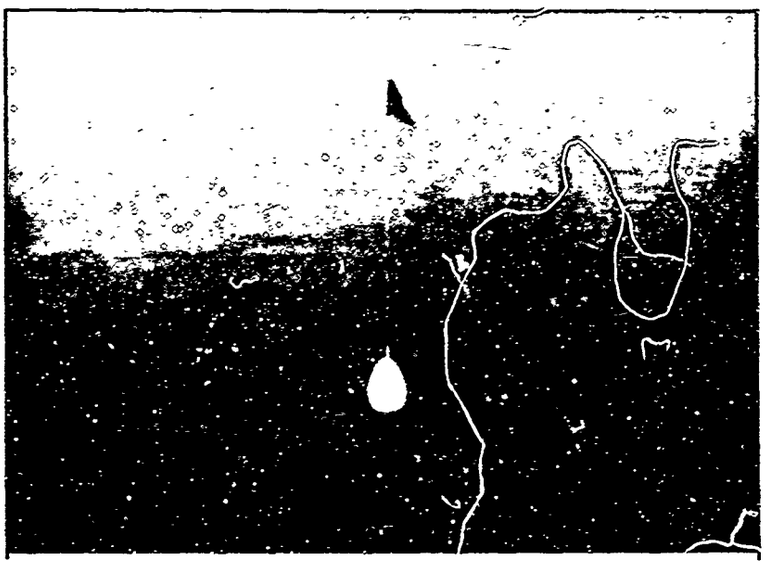

a. At Rest

b. Straight Run at 7 Knots

Figure 10 - Plastic Float Under Tow at Sea

c. 300-Yard Diameter Turn at 7 Knots

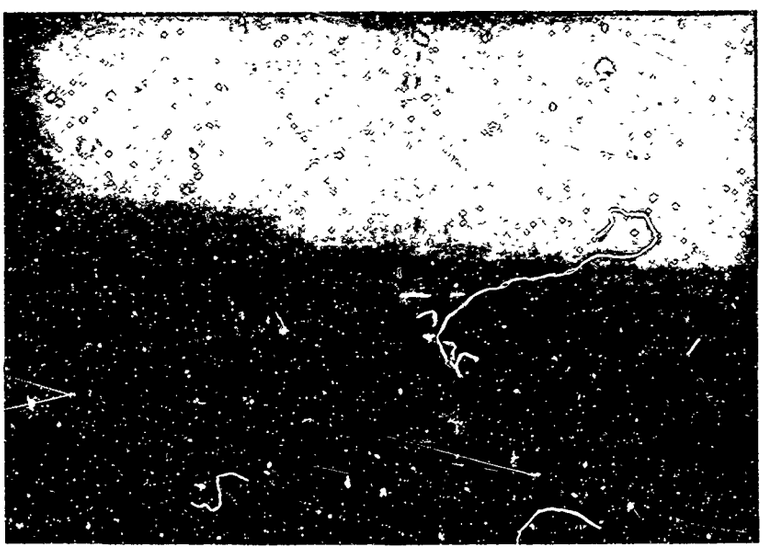

d. 50-Yard Diameter Turn at 6.5 Knots

Figure 10 - (Continued)

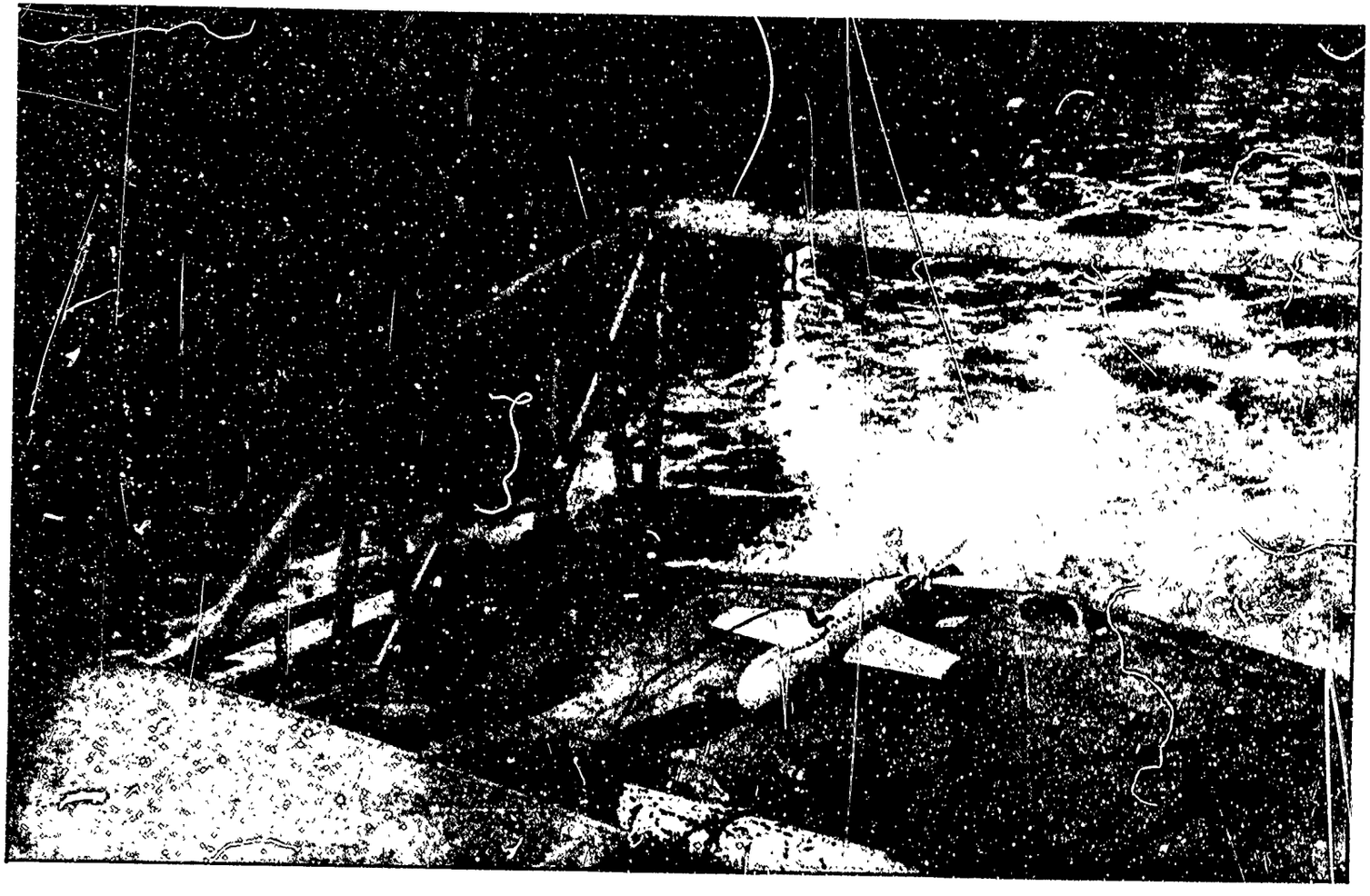

Figure 11 - DTMB Knotmeter, Mark II

maximum speed and the flagstaff and pennant remained vertical and visible at all times. The sea trial was conducted in a State 0 sea. However, the float was towed without difficulty through waves generated by the boat.

CONCLUSIONS

The results of tests, both in the Circulating Water Channel at the Model Basin and in the Chesapeake Bay, indicate that the Size 5 Reinforced-Plastic Minesweeping Float has satisfactory towing characteristics in the 0 to 7 knot speed range. The drag of the plastic float is considerably less than that of the present steel float. This difference is attributed to the modifications made to the body appendages and to the smaller maximum body diameter of the plastic float. The dynamic lift of the plastic float is slightly greater than that of the steel float from 2 to 6 knots and slightly less at speeds below 2 knots.

REFERENCES

1. Bureau of Ships letter A11/NS-034-045 (346), Serial 346-419 of 1 June 1959 to David Taylor Model Basin.

2. NAVSHIPS 250-620-30, "Index of Mine Countermeasures Material," October 1954.

3. Bureau of Ships letter A11/NS-034-045 (346), Serial 346-135 of 4 March 1959 to David Taylor Model Basin.

4. David Taylor Model Basin Memorandum (270:RAR:beb) of 20 March 1959.

5. David Taylor Model Basin Memorandum (270:RAR:beb) of 14 April 1959.

6. David Taylor Model Basin Memorandum (270:RAR:beb) of 23 September 1959.

7. Walton, Chester O., "Towing Tests and Computed Configuration of the NRL Electronic Communications Float System," David Taylor Model Basin Report C-982 (July 1958) CONFIDENTIAL.