ESD-TR-67-21

ESD TR-67-21
ESTI FILE COPY

ESD RECORD COPY
RETURN TO
SCIENTIFIC & TECHNICAL INFORMATION DIVISION
(ESTI), BUILDING 1211

ESD ACCESSION LIST
ESTI Call No. AL 55563
Copy No. 1 of 1 cys.

Technical Report 429

S. D. Ewing, Jr.
J. A. Weiss

Theory, Design and Performance of a Ring Circulator

17 January 1967

Prepared for the Advanced Research Projects Agency
under Electronic Systems Division Contract AF 19(628)-5167 by

Lincoln Laboratory

MASSACHUSETTS INSTITUTE OF TECHNOLOGY

Lexington, Massachusetts

AD650582

The work reported in this document was performed at Lincoln Laboratory, a center for research operated by Massachusetts Institute of Technology. This research is a part of Project DEFENDER, which is sponsored by the U.S. Advanced Research Projects Agency of the Department of Defense; it is supported by ARPA under Air Force Contract AF 19(628)-5167 (ARPA Order 498).

This report may be reproduced to satisfy needs of U.S. Government agencies.

Distribution of this document is unlimited.

Non-Lincoln Recipients

PLEASE DO NOT RETURN

Permission is given to destroy this document when it is no longer needed.

MASSACHUSETTS INSTITUTE OF TECHNOLOGY

LINCOLN LABORATORY

THEORY, DESIGN AND PERFORMANCE OF A RING CIRCULATOR

S. D. EWING, JR.
Group 44

J. A. WEISS
Consultant

TECHNICAL REPORT 429

17 JANUARY 1967

LEXINGTON MASSACHUSETTS

ABSTRACT

A compact, symmetrical, three-port S-band circulator composed of reciprocal tee junctions and nonreciprocal phase shifters is investigated theoretically, and its experimental performance results are presented. The comparison of these results demonstrates that (1) circulators can be designed and their experimental performance described from a network model and (2) there is no theoretical limitation on the minimum amount of total differential phase shift necessary for perfect circulation. Bandwidth is investigated and techniques are discussed, including the introduction of a "backward wave" phase shifter, for achieving larger bandwidths. The stripline, nonreciprocal, comb-filter phase shifter used in the ring circulator is described and performance results are given.

Accepted for the Air Force
Franklin C. Hudson
Chief, Lincoln Laboratory Office

CONTENTS

	Abstract	iii
I.	Introduction	1
II.	Ring Circulator Network Model	1
	A. Design	5
	B. Experimental Performance	6
	C. Phase Shifter	9
	D. Bandwidth	10
III.	Comments on Ring Circulator Theories	11
IV.	Conclusions	14
References		15

THEORY, DESIGN AND PERFORMANCE OF A RING CIRCULATOR

I. INTRODUCTION

Several articles have appeared in the literature proposing the idea of synthesizing a ring circulator.[1-3] In particular, Weiss[4] recently performed a rigorous theoretical analysis of the ring concept from a network model (hereafter referred to as RNM), and showed that perfect circulation could exist in a three-port ring consisting of specially mismatched tee junctions connected by phase shifters exhibiting small values of nonreciprocal phase shift.

Previous proposals on ring circulators incorporated relatively large amounts of nonreciprocal phase shift. The embodiments suggested by Kock,[3] Vartanian,[2] and Grace and Arams[1] specify a required total nonreciprocal phase shift of 180°; the last authors interpret a theorem of Carlin's[5] as implying that no physically realizable three-port circulator can have less than 180° of nonreciprocity. The present theory predicts that no such minimum exists. A clarification of this matter will be made in Sec. III, "Comments on Ring Circulator Theories," including the following points:

(a) The circulators of Kock, Vartanian, and Grace and Arams are all physically realizable and are special cases of RNM.

(b) Those of Kock and of Grace and Arams are, however, singular cases in which the coupling of the ring to an external circuit is indeterminate. The Vartanian circulator, on the other hand, is a well-behaved case, but calls for an unnecessarily large amount of differential phase shift.

(c) The theorem of Carlin on nonreciprocal networks imposes no lower bound on the amount of nonreciprocity required for a realizable circulator.

II. RING CIRCULATOR NETWORK MODEL

A stripline ring circulator is shown in Fig. 1. The ring network representation of the circulator shown in Fig. 2 consists of three symmetrical, reciprocal tee junctions (T) and three interconnecting nonreciprocal ferrite phase shifters (PS). The analysis involves the calculation of a set of parameters characterizing the phase shifters and the tee junctions such that the overall scattering coefficients of the network have values appropriate for perfect circulation. The parameters for the tee junctions are the components r, s, r_d and s_d of the scattering matrix of a physically realizable symmetrical tee (Fig. 3), and for the phase shifters they are the average insertion phase factor $\epsilon = \exp[i(\Theta_+ + \Theta_-)/2]$ and the nonreciprocal (differential) phase factor $\delta = \exp[i(\Theta_+ - \Theta_-)/2]$, where Θ_+ and Θ_- refer to clockwise and counter-clockwise phase shift ‡ between ports of the circulator, respectively.

‡ For an explanation of the phase-sign convention used in this work, see footnote on page 9.

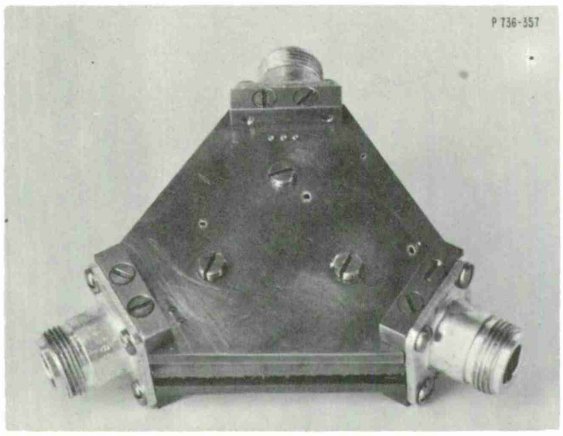

Fig. 1. Stripline S-band ring circulator with magnet removed.

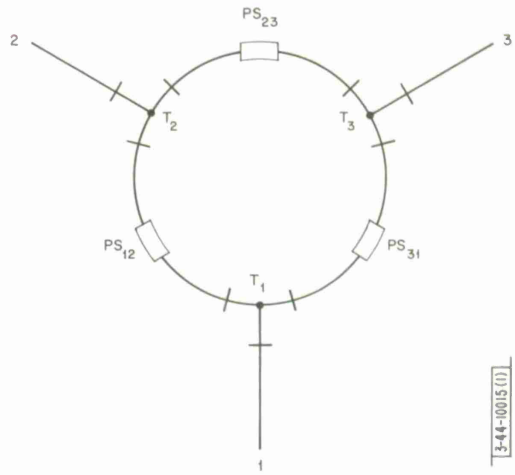

Fig. 2. Schematic diagram of ring network for three-port circulator. T denotes reciprocal tee junctions, and PS denotes nonreciprocal phase shifters.

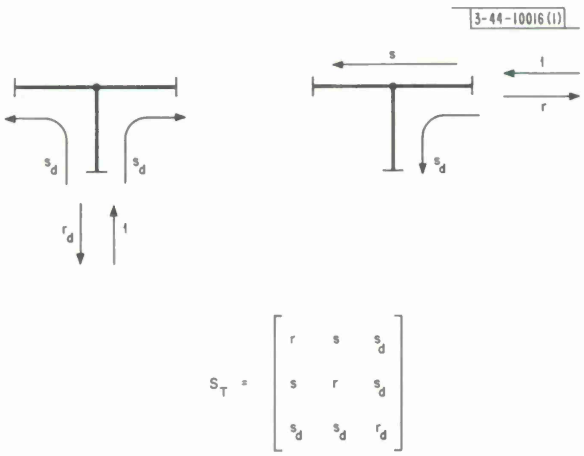

Fig. 3. Definition of scattering matrix of symmetrical tee junction.

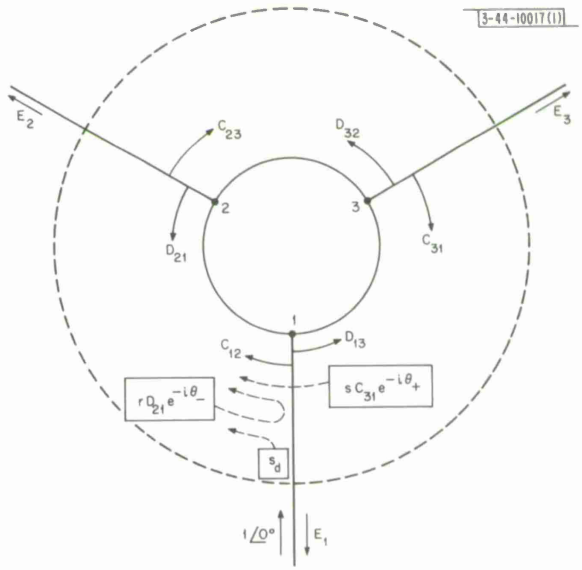

Fig. 4. Internal and scattered waves in ring network.

Internal scattering within the ring was characterized in terms of waves denoted by C and D, which were composed of contributions due to the transmission and reflection properties of the tee junctions. As an example (Fig. 4), C_{12} is the wave composed of contributions due to the transmission of the unit signal into the sector 1-2, the transmission of the wave C_{31} from sector 3-1 into sector 1-2, and the reflection of D_{21} at tee junction 1:

$$C_{12} = s_d + sC_{31}\, e^{-i\Theta_+} + rD_{21}\, e^{-i\Theta_-} \quad .$$

A set of six equations can be written in matrix form describing the internal waves. The determinant of the matrix of coefficients is given by

$$\Delta = (R^2 - S^2)^3 - 3R^2(R^2 - S^2 - 1) + (\delta^3 + \delta^{*3})\, S^3 - 1 \tag{1}$$

where

$$\epsilon = e^{-i(\Theta_+ + \Theta_-)/2} \tag{2a}$$

$$\delta = e^{-i(\Theta_+ - \Theta_-)/2} \tag{2b}$$

$$R = r\epsilon \tag{2c}$$

$$S = s\epsilon \quad . \tag{2d}$$

Once the C's and D's are known, the expressions for the scattered waves E_1, E_2 and E_3 can be written. For example, consider E_3,

$$E_3 = -\delta^* \epsilon \frac{s_d^2}{\Delta} \{(R - S)^3 (R + S) - 2R(R - S) + \delta^3 S\, [1 - (R - S)^2] + 1\} \quad . \tag{3}$$

When the condition $E_3 = 0$ for perfect isolation is imposed, there results either $|E_2| = 1$ for perfect circulation or $|E_1| = 1$ for complete reflection at the input. The latter result is discarded as trivial because no energy is coupled into the ring.

Substituting Eqs. (2a-d) into Eq. (3) and setting $E_3 = 0$ results in an expression for δ in terms of ϵ

$$\delta^3 = \frac{a_4\epsilon^4 + a_2\epsilon^2 + a_o}{a_3\epsilon^3 + a_1\epsilon} \quad . \tag{4}$$

With the requirement that $|\delta| = |\epsilon| = 1$, Eq. (4) yields a biquartic equation for ϵ

$$A_8\epsilon^8 + A_6\epsilon^6 + A_4\epsilon^4 + A_2\epsilon^2 + A_o = 0 \tag{5}$$

where the coefficients[4] $A_o, \ldots, A_8$ and $a_o, \ldots, a_4$ involve only the scattering coefficients r and s of the tee junctions, thereby making it possible to obtain the δ and ϵ necessary for perfect circulation when incorporating a particular tee junction.

The RNM in its original form does not lend itself directly to a synthesis procedure, but concentrates instead on the problem of determining the range of physically realizable tee junctions for which perfect circulation is possible. The scattering coefficients of tee junctions satisfying reciprocity, energy conservation, and tee symmetry were obtained by the standard method of the

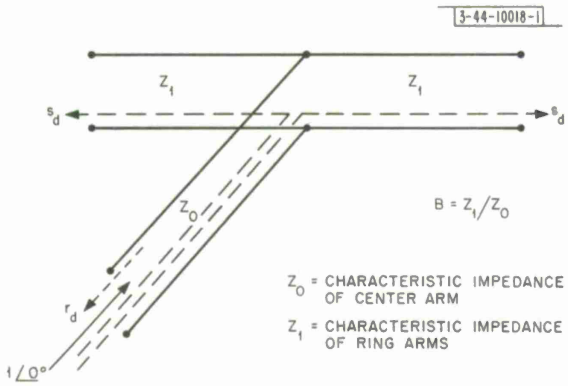

Fig. 5. Network representation of impedance tee.

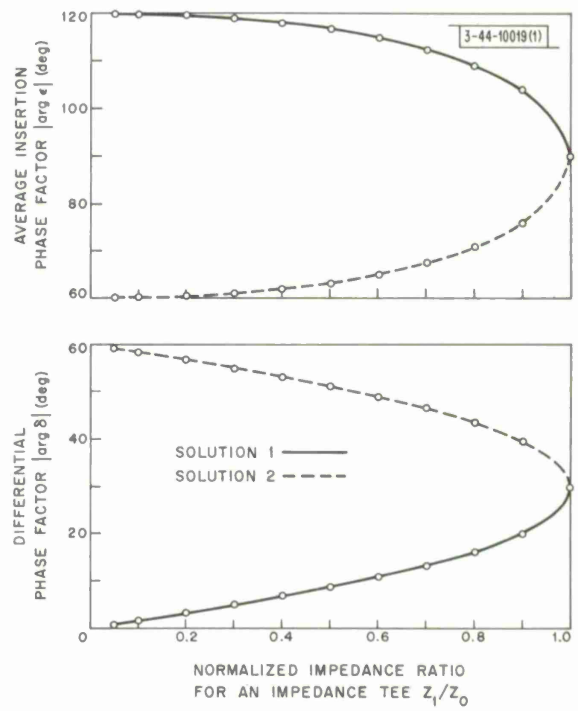

Fig. 6. Solutions for impedance tee: arguments of insertion phase factor ϵ and differential phase factor δ required for circulation.

theory of group representations.[6] The approach yielded a scattering matrix S_T (see Fig. 3) expressed in terms of the complex eigenvalues, s_a, s_b, s_c, and the degeneracy parameter γ. The scattering coefficients are given by

$$r = \frac{1}{2}\left(s_a + s_b \cos^2\gamma + s_c \sin^2\gamma\right) \tag{6}$$

$$s = \frac{1}{2}\left(-s_a + s_b \cos^2\gamma + s_c \sin^2\gamma\right) \tag{7}$$

$$r_d = s_b \sin^2\gamma + s_c \cos^2\gamma \tag{8}$$

$$s_d = \frac{1}{\sqrt{2}}\left(s_b - s_c\right)\cos\gamma \sin\gamma \tag{9}$$

in which $|s_a| = |s_b| = |s_c| = 1$ and γ is real.

A. Design

A computational procedure was designed, based on the RNM, whereby circulator parameters can be determined by either of two approaches. Either the parameters δ and ϵ of the phase shifters can be assumed and the corresponding tee junction scattering coefficients determined, or vice versa. We used the latter method: assuming the properties of the tees and deducing the phase shifter requirements for perfect circulation. This procedure has the advantage that a single style of tee junction design, incorporating a small number of variable tuning elements, may be investigated in a continuous way. Our experience with experimental phase shifter designs indicated that they have sufficient flexibility in adjustment of ϵ and δ to meet the requirements specified by the computation.

Initially a simple symmetrical stripline tee was considered in which the characteristic impedance Z_1 of the symmetrical arms differed from the Z_o of the input arm (Fig. 5). A computer program was written to calculate the required values of δ and ϵ from Eqs. (4) and (5) by using the scattering coefficients of this simple impedance tee junction:

$$r_d = \frac{B-2}{B+2} \tag{10a}$$

$$s_d = \frac{\sqrt{2B}}{B+2} \tag{10b}$$

$$r = \frac{-B}{B+2} \tag{10c}$$

$$s = \frac{2}{B+2} \tag{10d}$$

where

$$B = Z_1/Z_o \quad . \tag{11}$$

The computation resulted in four solutions $(\pm\delta_1, \pm\epsilon_1)$, $(\pm\delta_2, \pm\epsilon_2)$ as functions of B (Fig. 6) which satisfy all requirements for physical realizability. The behavior of $|\arg \delta_1|$‡ shows a reduction in the required nonreciprocal phase shift for decreasing values of B. We chose not

‡ Throughout this report, arg is used to mean "the argument of the complex quantity."

to utilize the impedance tee, because the unequal impedances in the ring (phase shifters) and its ports necessitate the use of nonstandard measurement equipment (characteristic impedances $\neq 50$ ohms).

Other simple tee junctions were assumed in which the scattering was controlled by a reactive element located at or near the junction. The objective was to find a tee junction which would be easy to fabricate and could be easily adjusted. Figures 7(a) and (b) are graphs of arg δ and arg ϵ as functions of the reactance magnitude. (These curves are discussed in Sec. II-D.)

The simple symmetrical stripline tee of Fig. 7(a) incorporating a shunt capacitance at the junction was selected for the experimental verification of the theory. A shunt reactance magnitude of 50 ohms which specifies arg $\epsilon = 135°$ and arg $\delta = 15°$ (nonreciprocal phase shift per sector of 2 arg $\delta = 30°$) was selected for the experimental circulator.

B. Experimental Performance

A complete ring circulator was constructed which consisted of capacitive shunt screw tuners located over the center of each tee junction and three stripline phase shifters biased by an external electromagnet. The experimental performance is shown in Fig. 8. The isolation was in excess of 20 db from 3.015 to 3.075 GHz (maximum of greater than 40 db at 3.045 GHz) and the insertion loss was less than 1 db from 2.950 to 3.165 GHz (with a minimum of 0.4 db). The VSWR remained less than 1.25 from 3.011 to 3.084 GHz. A comparison of experimental and theoretical parameters is given in Table I. The close agreement between theory and experiment is evidence that the

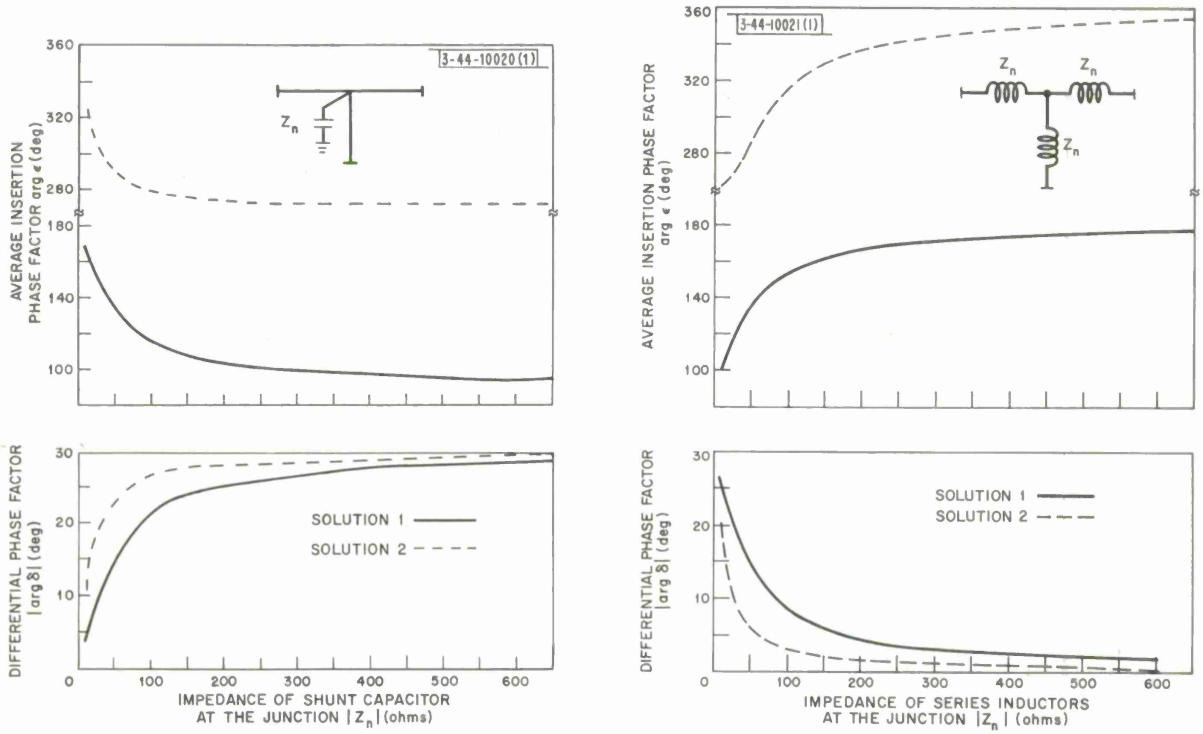

(a) Tee with shunt capacitance.

(b) Tee with series inductance.

Fig. 7(a-b). Solutions for reactive elements.

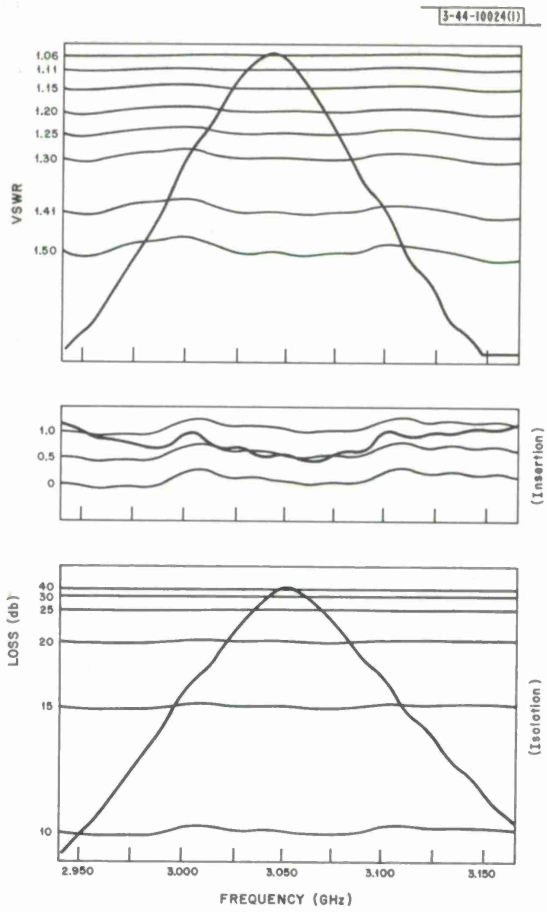

Fig. 8. Recorder tracings showing experimental ring circulator performance.

TABLE I

COMPARISON OF THEORY AND EXPERIMENT FOR RING CIRCULATOR

Parameters		Theoretical	Experimental
Z_n	Shunt reactive impedance (ohms)	50.0	47.0 ± 1.0
arg ϵ	Average insertion phase factor (deg)	135.0	125.0
arg δ	Nonreciprocal phase factor (deg)	15.0	14.2
f_o	Center frequency of operation (GHz)	3.000	3.045
Δf	Bandwidth for $\geqslant$20-db isolation (MHz)	87.0	60.0

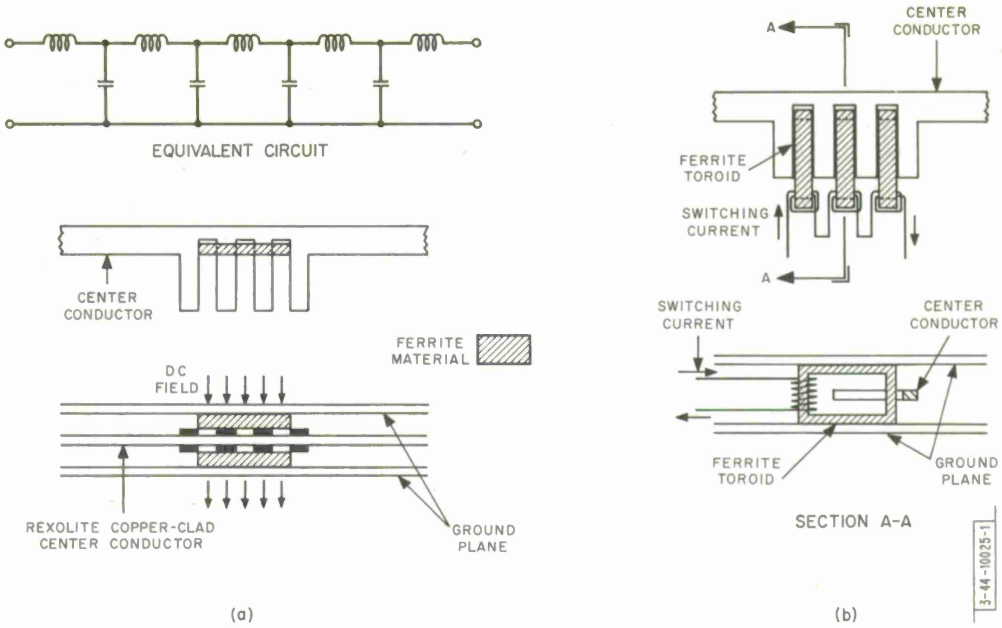

Fig. 9(a-b). Illustrating design of nonreciprocal stripline "comb" filter.

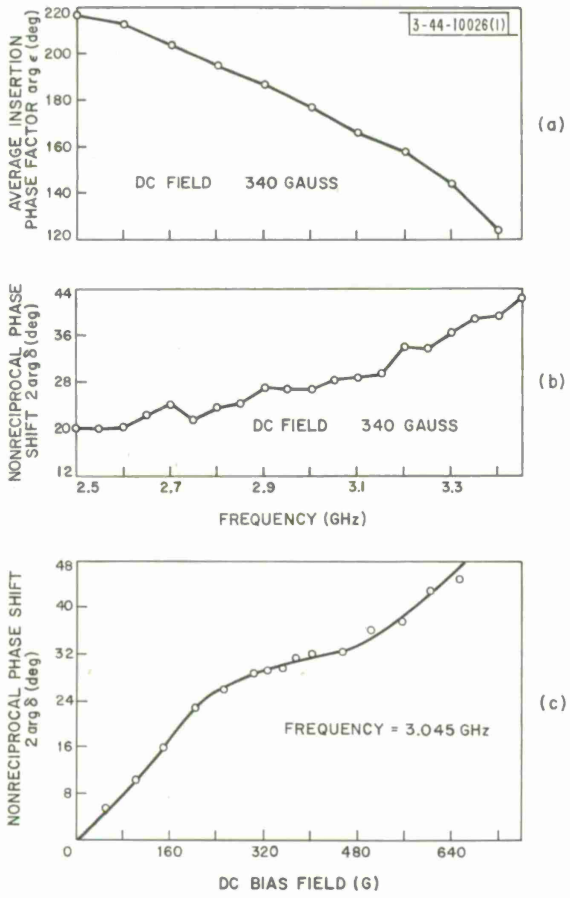

Fig. 10(a-c). Experimental data on low-pass nonreciprocal stripline "comb" filter.

network model is a sound basis for the circulator design. However, the one exception is in the 20-db bandwidth, where theory and experiment give 87 and 60 MHz, respectively. This difference may be due to slight deviations from threefold symmetry, but in any case it deserves further investigation. Agreement between theory and experiment encompasses more detailed data not included here; for example, the magnitude and phase of the reflection E_1 from the input port conforms to prediction over a broad frequency range that extends far beyond the nominal operating band.

C. Phase Shifter

The idea of combining a TEM transmission-stripline filter with ferrite elements to produce nonreciprocal phase shift may be regarded as an outgrowth of two familiar techniques: (a) field distortion, created by the use of dielectric inserts or other means, to produce circularly polarized components of the RF fields; and (b) the use of meander-line, helix, or other slow-wave structures to increase the amount of interaction with the ferrite. Such a combination has been used in traveling-wave masers[7] to make a resonance isolator.

A simple stripline "comb" filter is made by attaching a closely spaced series of stubs ("teeth") along one edge of the stripline center conductor as illustrated in Fig. 9(a). One can see how this filter gives rise to the appropriate polarization for nonreciprocal effects from the following remarks. At the point in the passband at which the iterative phase between filter sections is 90°, there are two regions intermediate between adjacent teeth, above and below the plane of the comb, at which the radiation is circularly polarized in the clockwise and counterclockwise senses, respectively, when viewed along a line parallel to the long dimension of the teeth. This suggests that an appropriate direction for magnetizing the ferrite elements with a DC bias field is along that line. Such an arrangement has been used for isolation;[7] our data show that an appreciable amount of differential phase shift can be produced with relatively low DC magnetic fields in this way. It is less easy to see other than in an intuitive way how comparable amounts of differential phase shift can be produced by magnetizing the ferrite in a direction perpendicular to the plane of the comb, but our data show that such an effect does indeed take place. An example of such a filter structure is illustrated in Fig. 9(a). Typical curves giving experimental data on insertion‡ and differential phase§ characteristics are presented in Figs. 10(a-c). Design principles for the lumped-element prototype of such a low-pass filter are presented in Guillemin[8] and elsewhere. Stripline phase shifters of this type have been designed which are compact,# have up to 35° of nonreciprocal phase shift at 3.00 GHz as

‡The data of Fig. 10(a) differ from those referred to in Table I because they do not include the electrical length of the line adjoining the filter in the ring structure.

§To fix the phase sign convention, we have adopted the view that the more natural choice of sign is positive for time term $i\omega t$ and negative for the position term $-i\beta z$. This means that the phase observed at a fixed point on the transmission line increases as time advances, whereas at a fixed time, the phase decreases as we proceed away from the generator to portions of the wave which left the generator earlier. In computer work, however, it is convenient to suppress most of the negative signs by advancing all phases by appropriate multiples of 360°. In the graphs of arg ϵ [Figs. 6(a), 7, 10(a), 11(a)] the physically meaningful values are obtained by subtracting 360°. The interpretation of the terms "increasing" and "decreasing" phase is as follows: the electrical length of a section of simple TEM line decreases (becomes more negative) with increasing frequency; in a backward-wave structure, the electrical length increases (becomes less negative) with increasing frequency.

#Length 0.615 inch, width 0.410 inch, ground plane spacing 0.312 inch, 1/16-inch Rexolite copper-clad center conductor; number of sections, 4.

shown in Fig. 10(c), exhibit an insertion loss less than 0.3 db and high efficiencies (up to 35° with 0.014 cubic inch of ferrite). Because of the small volume of active material required, and the freedom available in the distribution of ferrite in relation to the transmission line, stripline comb-filter nonreciprocal phase shifters have the added potential of permitting toroid configurations for high-speed switching. They also permit ferrite distributions which are favorable from the point of view of high peak and average power capability.

D. Bandwidth

The performance of the experimental model can be predicted from the network theory by incorporating in the computation the appropriate theoretical (or experimental) frequency variation of the tee scattering coefficients and the actual δ and ϵ values from the experimental phase shifter. Insertion loss, isolation, and input match over the band of interest are determined by the over-all circulator scattering coefficients E_1, E_2, and E_3. For a lossless circulator these parameters are, of course, not independent; in fact, as shown by Simon[9] and others, for low-loss circulators with good isolation, we have $|E_3| \cong |E_1|$.

For the shunt capacitor tee junction of Fig. 7(a), the simple reactive impedance variation $Z_n = 50 \times 3.0/f$ (f in giga-hertz) of the shunt capacitors was assumed; arg δ and arg ϵ were obtained from actual phase shifter measurements (Fig. 10). With the values of Z_n, arg δ and arg ϵ as given in Table I holding at a band center of 3.00 GHz, the computed value of the 20-db bandwidth was 87 MHz.

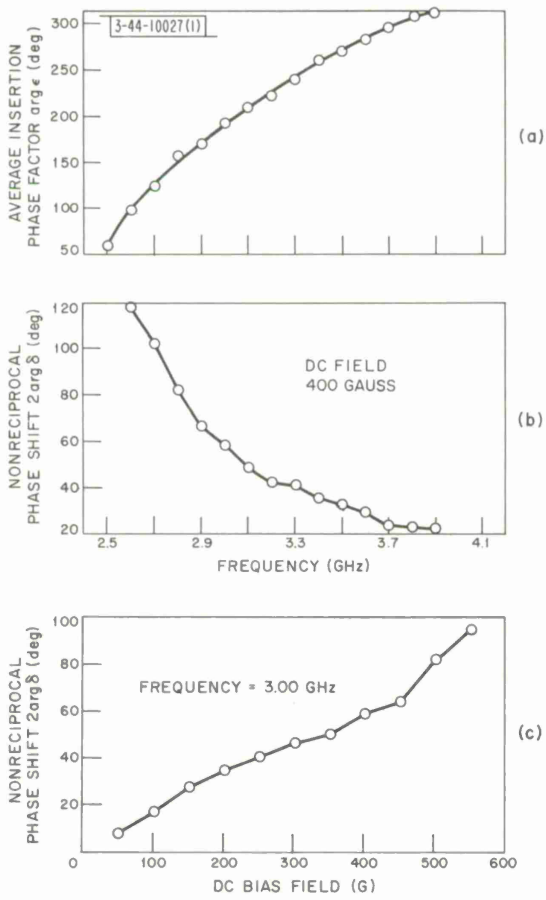

Fig. 11(a-c). Experimental data on "backward-wave" nonreciprocal stripline "comb" filter.

The narrow bandwidth of this prototype circulator is not inherent in the ring principle, but results from the failure of the dispersive characteristics of the phase shifters and of the tee junctions to track properly. As can be seen from Figs. 7(a) and 10(a), when a tee incorporating a shunt capacitance is used, the required variation of the insertion phase factor arg ϵ for circulation is increasing with increasing frequency. The curve of arg ϵ for the low-pass comb filter has the opposite slope; therefore, the proper relation between phases for circulation exists only over a very narrow band. By means of a proper design of the tee junction, or the phase shifter, or both, the dispersions of these components can be made to agree in both sign and magnitude, thereby causing circulation to persist over a much broader band.

In accordance with this requirement, one of us (S. D. E.) investigated the possibility of using a high-pass "backward-wave" filter to produce the type of phase-shift dispersive characteristics necessary for broader-band circulation. Experimental models were built for which arg ϵ increases with increasing frequency, as shown in Fig. 11(a-c). Preliminary observations show that such a phase shifter is quite satisfactory from the point of view of insertion loss and mechanical design, along with the capability of producing large amounts of nonreciprocal phase shift as shown in Fig. 11(c).

III. COMMENTS ON RING CIRCULATOR THEORIES

The three-port ring circulator model proposed by Grace and Arams,[1] which does not account for any scattering of the signal at the tee junctions, is based upon the assumption that perfect circulation will result if the difference in phase shift for the two paths from the input port to the output port (transmission) is an even multiple of 180° and the difference is an odd multiple of 180° from the input to the isolated port. This simple model is valid only in the singular case in which the reflection coefficient r of the tee junctions is zero. For physically realizable tee junctions, this condition on r implies that the input ports are completely decoupled. To see this, note in Eq. (6) that r = 0 implies

$$s_a = -(s_b \cos^2 \gamma + s_c \sin^2 \gamma) \quad . \tag{12}$$

Hence

$$|s_b \cos^2 \gamma + s_c \sin^2 \gamma| = |s_a| = 1 \quad . \tag{13}$$

From Eqs. (13) and (8) it follows that

$$|r_d| = 1 \quad .$$

It can also be verified that $s_d = 0$, by noting that since s_a, s_b, s_c have unit magnitude, Eq. (13) can hold only if s_b is equal to s_c in phase. Then with Eq. (9),

$$s_d = 0 \quad .$$

Thus there is no coupling, but only complete reflection of radiation entering the input ports. It is straightforward to verify that the conditions r = 0, $|s| = 1$ together with arg $\epsilon = 90°$ and arg $\delta = 30°$ which are equivalent to the results of Grace and Arams, lead to the singular case in which the determinant Δ of Eq. (1) vanishes. This correctly corresponds to indeterminacy (resonance) in the excitation of the circulator.

In the embodiments suggested by Kock[3] and by Vartanian,[2] the value of 2 arg δ is 180°. In his proposal Kock leaves the value of insertion phase arg ϵ unspecified, although his example shows Θ_+ and Θ_- as even and odd multiples of 180°, respectively. Since Kock's model does not take into account scattering at the tee junctions, it is subject to the same comments which have been made in reference to the proposal of Grace and Arams.

Vartanian specifies that each sector is occupied by a gyrator; thus $\Theta_+ = 180°$, $\Theta_- = 0$, giving arg $\delta = \epsilon = 90°$. His assumed scattering coefficients for the tee junctions are equivalent to those of Eq. (10) with the impedance ratio B [Eq. (11)] equal to unity. His solution is consistent with RNM, but uses an unnecessarily large value of arg δ. From RNM it can be shown that another solution for the same tee junction is arg $\delta = 30°$ and arg $\epsilon = 90°$.

The theorem of Carlin[5] on nonreciprocal networks imposes no lower bound on the amount of nonreciprocity required for a realizable circulator. Carlin's analysis of nonreciprocal networks shows that every scattering matrix which passes a certain test for physical realizability corresponds to an equivalent network in which all nonreciprocity is embodied in a single type of nonreciprocal element; namely, a gyrator. It shows further how the minimum number of gyrators required for the network corresponding to a given matrix can be determined. For the case of a three-port circulator, this number is one. This conclusion does not imply, however, that the minimum amount of nonreciprocity for which the circulator will operate properly is equal to the amount provided by one gyrator, namely, 2 arg $\delta = 180°$, since it does not consider at all the possibility of realizing the network with phase shifters having other (in particular, smaller) values of differential phase. The logic can be illustrated by analyzing a simpler device: a two-port nonreciprocal phase shifter for which 2 arg δ is, say, only a few degrees.

A matched nonreciprocal phase shifter is represented by the scattering matrix

$$S = \begin{bmatrix} 0 & \exp[-i\Theta_-] \\ \exp[-i\Theta_+] & 0 \end{bmatrix} .$$

The impedance matrix Z for the same device is related to S by

$$\frac{Z}{Z_o} = 2(I - S)^{-1} - I$$

where I is the unit matrix, and Z_o is the characteristic impedance. We obtain

$$\frac{Z}{Z_o} = \frac{1}{1 - \exp[-i(\Theta_+ + \Theta_-)]} \begin{bmatrix} 1 + \exp[-i(\Theta_+ + \Theta_-)] & 2\exp[-i\Theta_-] \\ 2\exp[-i\Theta_+] & 1 + \exp[-i(\Theta_+ + \Theta_-)] \end{bmatrix}$$

or

$$\frac{Z}{Z_o} = \frac{1}{\sin\frac{1}{2}(\Theta_+ + \Theta_-)} \begin{bmatrix} -i\cos\frac{1}{2}(\Theta_+ + \Theta_-) & -i\exp[\frac{1}{2}i(\Theta_+ - \Theta_-)] \\ -i\exp[-\frac{1}{2}i(\Theta_+ - \Theta_-)] & -i\cos\frac{1}{2}(\Theta_+ + \Theta_-) \end{bmatrix} .$$

Now, in Carlin's analysis of nonreciprocal networks, Z is decomposed into a Hermitian part Z_H and an anti-Hermitian part Z_S, according to

$$Z_H = \frac{1}{2}(Z + Z^\dagger), \qquad Z_S = \frac{1}{2}(Z - Z^\dagger)$$

where † denotes Hermitian conjugate. The anti-Hermitian part Z_S is then further decomposed into its real and imaginary parts:

$$Z_S = R_S + i\,X_S \quad .$$

In the case of the nonreciprocal phase shifter, we find

$$Z_H = 0$$

$$\frac{R_S}{Z_o} = \frac{1}{\sin\frac{1}{2}(\Theta_+ + \Theta_-)} \begin{bmatrix} 0 & \sin\frac{1}{2}(\Theta_+ - \Theta_-) \\ -\sin\frac{1}{2}(\Theta_+ - \Theta_-) & 0 \end{bmatrix}$$

$$\frac{X_S}{Z_o} = \frac{1}{\sin\frac{1}{2}(\Theta_+ + \Theta_-)} \begin{bmatrix} -\cos\frac{1}{2}(\Theta_+ + \Theta_-) & -\cos\frac{1}{2}(\Theta_+ - \Theta_-) \\ -\cos\frac{1}{2}(\Theta_+ - \Theta_-) & -\cos\frac{1}{2}(\Theta_+ + \Theta_-) \end{bmatrix} \quad .$$

The network representation consists of a conventional tee network with a gyrator added in series with the shunt impedance, as shown in Fig. 12. In the conventional symbol for the gyrator, α denotes the transfer impedance according to $V_2 = \alpha I_1$; then $V_1 = -\alpha I_2$. From the above matrix we have

$$\frac{Z_1}{Z_o} = \frac{Z_2}{Z_o} = i\,\frac{\cos\frac{1}{2}(\Theta_+ - \Theta_-) - \cos\frac{1}{2}(\Theta_+ + \Theta_-)}{\sin\frac{1}{2}(\Theta_+ + \Theta_-)}$$

$$\frac{Z_3}{Z_o} = -i\,\frac{\cos\frac{1}{2}(\Theta_+ - \Theta_-)}{\sin\frac{1}{2}(\Theta_+ + \Theta_-)} \qquad \alpha = -\frac{\sin\frac{1}{2}(\Theta_+ - \Theta_-)}{\sin\frac{1}{2}(\Theta_+ + \Theta_-)} \quad .$$

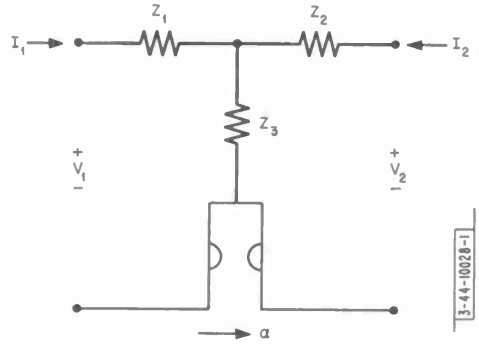

Fig. 12. Equivalent circuit for nonreciprocal phase shifter.

This characterizes one possible equivalent circuit for the phase shifter. In accordance with the method employed, the circuit incorporates one gyrator, which considered by itself produces a differential phase of 180°. The differential phase of the complete device is $\Theta_+ - \Theta_-$, which may have any value. Thus, for example, a differential phase shifter which is only lightly loaded with nonreciprocal material may produce differential phase which is much less than 180°. Nevertheless, it is obvious in this case that the minimum number of gyrators required for an equivalent circuit of this device can be no less than one. For completeness, however, we mention Carlin's method of determining the minimum: it is equal to one-half the rank of R_S. In the present case the rank of R_S is seen to be two, except in the limit $\Theta_+ - \Theta_- = 0$, where it is zero. Thus for a nontrivial phase shifter, the minimum number of gyrators is one, as required. The conclusion is that the Carlin theorem imposes no lower limit on the amount of differential phase required for circulation, and that the results of RNM are not inconsistent with the network principles as discussed by Carlin. The experimental circulator reported herein, having a total nonreciprocal phase shift of approximately 90°, is a confirmation of the theory and agrees with the conclusion that the value of 180° for the total nonreciprocal phase shift for the entire ring, $3(2 \arg \delta)$, is not the lower bound.

IV. CONCLUSIONS

The close agreement between the theoretical and experimental performance not only demonstrates that the network approach is a valid method and provides an efficient technique for circulator design, but also confirms that 0° and not 180° is the lower bound for the total nonreciprocal phase necessary for perfect circulation. The rather narrow bandwidth of the present model is a direct result of the particular embodiment: the shunt capacitive tee junction and the "forward wave" phase shifter. Bandwidth can be improved either by employing the "backward wave" phase shifter or by selecting other tee configurations. The ring circulator concept suggests a means of achieving both high-speed switching and high microwave power-handling capability in a compact device. The comb-filter phase shifters provide an efficient means of obtaining nonreciprocal phase shift. In particular, these types of phase shifters offer possibilities for shaping both the insertion and differential phase characteristics through appropriate filter structure design.

ACKNOWLEDGMENT

This work was performed under the sponsorship of the Array Radars Group (Group 44) of Lincoln Laboratory. The support and encouragement of D.H. Temme and other members of the group are hereby acknowledged. The authors also wish to acknowledge stimulating conversations with C.E. Muehe, Jr., and the valuable assistance of A.J. Fallo in the experimental phase of the work.

REFERENCES

1. M. Grace and F.R. Arams, "Three-Port Ring Circulators," Proc. IRE 48, 1497 (August 1960).
2. P.N. Vartanian, "The Theory and Applications of Ferrites at Microwave Frequencies," Sylvania EDL Report E15 (April 1956), pp. 119-126, DDC 101888.
3. W.E. Kock, "Signal Routing Apparatus," U.S. Patent No. 2,794,172 (May 1957).
4. J.A. Weiss, "Circulator Synthesis," IEEE Trans. MTT 13, 38 (January 1965). The ring network model presented in this reference is referred to in the present paper as RNM.
5. H.J. Carlin, "Principles of Gyrator Networks," Proc. Symposium Modern Advances in Microwave Techniques, Polytechnic Institute of Brooklyn, Brooklyn, N.Y. (November 1954), pp. 175-204. "On the Physical Realizability of Linear Non-Reciprocal Networks," Proc. IRE 48, 608 (May 1955).
6. C.G. Montgomery, R.H. Dicke and E.M. Purcell, Principles of Microwave Circuits, Vol. 8, M.I.T. Radiation Laboratory Series (McGraw-Hill, N.Y., 1948), Ch. 12.
7. R.W. deGrasse, E.O. Schulz-duBois and H.E.D. Scovil, "The Three-Level Solid State Traveling-Wave Maser," Bell System Tech. J. 38, 305 (March 1959).
8. E.A. Guillemin, Communication Networks, Vol. II (Wiley, New York, 1935), pp. 279-297.
9. J.W. Simon, "Broadband Strip-Transmission Line Y-Junction Circulators," IEEE Trans. MTT 13, 335 (May 1965).

DOCUMENT CONTROL DATA – R&D

(Security classification of title, body of abstract and indexing annotation must be entered when the overall report is classified)

1. ORIGINATING ACTIVITY *(Corporate author)* Lincoln Laboratory, M.I.T.	2a. REPORT SECURITY CLASSIFICATION Unclassified 2b. GROUP None

3. REPORT TITLE

Theory, Design and Performance of a Ring Circulator

4. DESCRIPTIVE NOTES *(Type of report and inclusive dates)*

Technical Report

5. AUTHOR(S) *(Last name, first name, initial)*

Ewing, S.D., Jr., and J.A. Weiss

6. REPORT DATE 17 January 1967	7a. TOTAL NO. OF PAGES 20	7b. NO. OF REFS 9

8a. CONTRACT OR GRANT NO. AF 19 (628)-5167 b. PROJECT NO. Order 498 c. d.	9a. ORIGINATOR'S REPORT NUMBER(S) Technical Report 429 9b. OTHER REPORT NO(S) *(Any other numbers that may be assigned this report)* ESD-TR-67-21

10. AVAILABILITY/LIMITATION NOTICES

Distribution of this document is unlimited.

11. SUPPLEMENTARY NOTES None	12. SPONSORING MILITARY ACTIVITY Advanced Research Projects Agency, Department of Defense

13. ABSTRACT

A compact, symmetrical, three-port S-band circulator composed of reciprocal tee junctions and nonreciprocal phase shifters is investigated theoretically, and its experimental performance results are presented. The comparison of these results demonstrates that (1) circulators can be designed and their experimental performance described from a network model and (2) there is no theoretical limitation on the minimum amount of total differential phase shift necessary for perfect circulation. Bandwidth is investigated and techniques are discussed, including the introduction of a "backward wave" phase shifter, for achieving larger bandwidths. The stripline, nonreciprocal, comb-filter phase shifter used in the ring circulator is described and performance results are given.

14. KEY WORDS

circulators	phase shifters
ferrites	filters

Printed by
United States Air Force
L. G. Hanscom Field
Bedford, Massachusetts