ESD ACCESSION LIST
ESTI Call No. AL 55575
Copy No. 1 of 1 cys.

ESD-TR-67-205

ESD TR-67-205
ESTI FILE COPY

ESD RECORD COPY
RETURN TO
SCIENTIFIC & TECHNICAL INFORMATION DIVISION
(ESTI), BUILDING 1211

A SYSTEMS APPROACH TO COMPUTER PROGRAMS

Joseph L. Pokorney, Captain
Wallace E. Mitchell, Captain

February 1967

TECHNICAL REQUIREMENTS AND STANDARDS OFFICE
ELECTRONIC SYSTEMS DIVISION
AIR FORCE SYSTEMS COMMAND
UNITED STATES AIR FORCE
L. G. Hanscom Field, Bedford, Massachusetts 01730

Distribution of this document is unlimited.

AD0650216

LEGAL NOTICE

When U. S. Government drawings, specifications or other data are used for any purpose other than a definitely related government procurement operation, the government thereby incurs no responsibility nor any obligation whatsoever; and the fact that the government may have formulated, furnished, or in any way supplied the said drawings, specifications, or other data is not to be regarded by implication or otherwise as in any manner licensing the holder or any other person or conveying any rights or permission to manufacture, use, or sell any patented invention that may in any way be related thereto.

OTHER NOTICES

Do not return this copy. Retain or destroy.

LIMITATION NOTICE

Qualified users may obtain copies of this report from the Defense Documentation Center.

ESD-TR-67-205

A SYSTEMS APPROACH TO COMPUTER PROGRAMS

Joseph L. Pokorney, Captain
Wallace E. Mitchell, Captain

February 1967

TECHNICAL REQUIREMENTS AND STANDARDS OFFICE
ELECTRONIC SYSTEMS DIVISION
AIR FORCE SYSTEMS COMMAND
UNITED STATES AIR FORCE
L. G. Hanscom Field, Bedford, Massachusetts 01730

Distribution of this document is unlimited.

FOREWORD

This report was prepared for presentation at the Boston IEEE Section, Reliability Group, and U. S. Air Force, Electronic Systems Division Joint Spring Seminar held 27 April 1967 at L. G. Hanscom Field, Bedford, Massachusetts.

REVIEW AND APPROVAL

This technical report has been reviewed and is approved.

FRANK E. BRANDEBERRY, Colonel, USAF
Chief, Technical Requirements and
Standards Office

ABSTRACT

Recent experience at ESD in acquiring complex computer based systems has identified a deficiency in existing systems management techniques in the area of computer programs. The systems management techniques generally in use were designed for "equipment" systems and need to be expanded to include computer programs. This paper describes an ESD approach to adapting existing AFSC system management techniques to computer programs. Procedures for insuring system compatibility, design integrity and technical control are discussed and a method for achieving design verification and qualification is presented. Particular emphasis is placed on the relationship of these techniques to computer programs as elements of large computer based systems. The application of these techniques is illustrated through selected examples taken from current ESD system procurements.

SUMMARY

Recent experience at ESD in acquiring complex computer based systems has identified a deficiency in existing systems management techniques in the area of computer programs. The systems management techniques generally in use were designed for "equipment" systems and needed to be expanded to include computer programs. This paper describes an ESD approach to adapting existing AFSC systems management techniques to computer programs. Procedures for insuring system compatibility, design integrity and technical control are discussed and a method for achieving design verification and qualification is presented. Particular emphasis is placed on the relationship of these techniques to computer programs as elements of large computer based systems. The application of these techniques is illustrated through selected examples taken from current ESD system procurements.

INTRODUCTION

Systems Management

The concepts of "Systems Management" within the Air Force are well established in the 375-series Air Force regulations and Systems Command manuals. After many years of experience the procedures for managing systems acquisition have become highly structured and highly detailed in some areas. At the same time the systems management structure has been kept general enough so that the techniques can be easily applied to any large system (whether it be a missile system, an electronic system, an aeronautical system, etc.) and can be selectively applied to small procurements.

Effects of Computer Programs

Since the development of the Semi-Automatic-Ground-Environment (SAGE) system in the late 50's, the use of digital computers and computer programs has played an increasing role in military systems. Here at Electronic Systems Division (ESD) almost every "L" system developed in recent years has been intimately involved with computers and computer programs. In spite of the extensive application of computer programs, their role in systems has not been well defined nor generally understood. Typically, "Systems Management" has been applied to the collection of equipment, facilities, personnel, documentation, etc., that comprise a system, without regard for the computer programs within the system. To some extent this may be due to the self-imposed independence of computer programmers and analysts from the engineering discipline. But to a greater extent it is due to a lack of understanding of computer programs and their design and application. In part, this lack of understanding is because of the

inherent properties of a computer program. The computer program is an elusive and intangible object. It cannot be readily seen or felt and thus is difficult to describe.

This lack of understanding has not, however, prevented computer programs from becoming an important element of many current systems. Unfortunately, the Systems Management techniques have not yet recognized the impact of computer programs on systems development. Thus computer programs in the past have failed to receive the proper "systems" emphasis required to effectively utilize them within a system. Typically, a system under development has progressed well into the detailed design stage and often into fabrication while the computer programmers have been left in a vacuum to design and code the computer program with only a minimum of guidance. When the equipment and computer programs are integrated, the problems start: Functions that each group (engineers and programmers) thought the other was responsible for often are not being performed at all; interfaces between computer programs, equipment and personnel are incompatible; essentially, the system will not work. The result is often extensive redesign of equipment and computer programs with an accompanying increase in cost and delay in schedule. Frequently all or most of the redesign effort is placed on the computer programs because of their inherent flexibility. Continued capitalization on the flexibility of computer programs to correct system deficiencies, without due consideration of systems effectiveness, will eventually place severe limitations on the computer programs within the system.

In the past year the Technical Requirements and Standards Office of ESD has undertaken the task of expanding the established systems management techniques to include computer programs as an essential element of the system. The result of this effort has taken the form of supplements[1, 2] to the AFSC 375 series manuals that can be used as the basis for future revisions to these manuals. Essentially the activities of systems management have been applied to the fundamental elements of systems as illustrated in figure 1. Typically, an Air Force System Program Office is organized along the five sub-areas of management shown in figure 1.

Activities represented under Program Control and Procurement and Production tend to be of an administrative nature, covering such matters as budget, schedules, costs and contracting.

As depicted, the major task is System Engineering. This activity accomplishes the primary job of maintaining technical control of the system program in all its aspects.

Configuration Management and Test and Deployment are closely associated with System Engineering, but are separated for special consideration and responsibility. They pertain, most directly, to the major system elements: equipment, facilities, and computer programs.

SYSTEMS MANAGEMENT

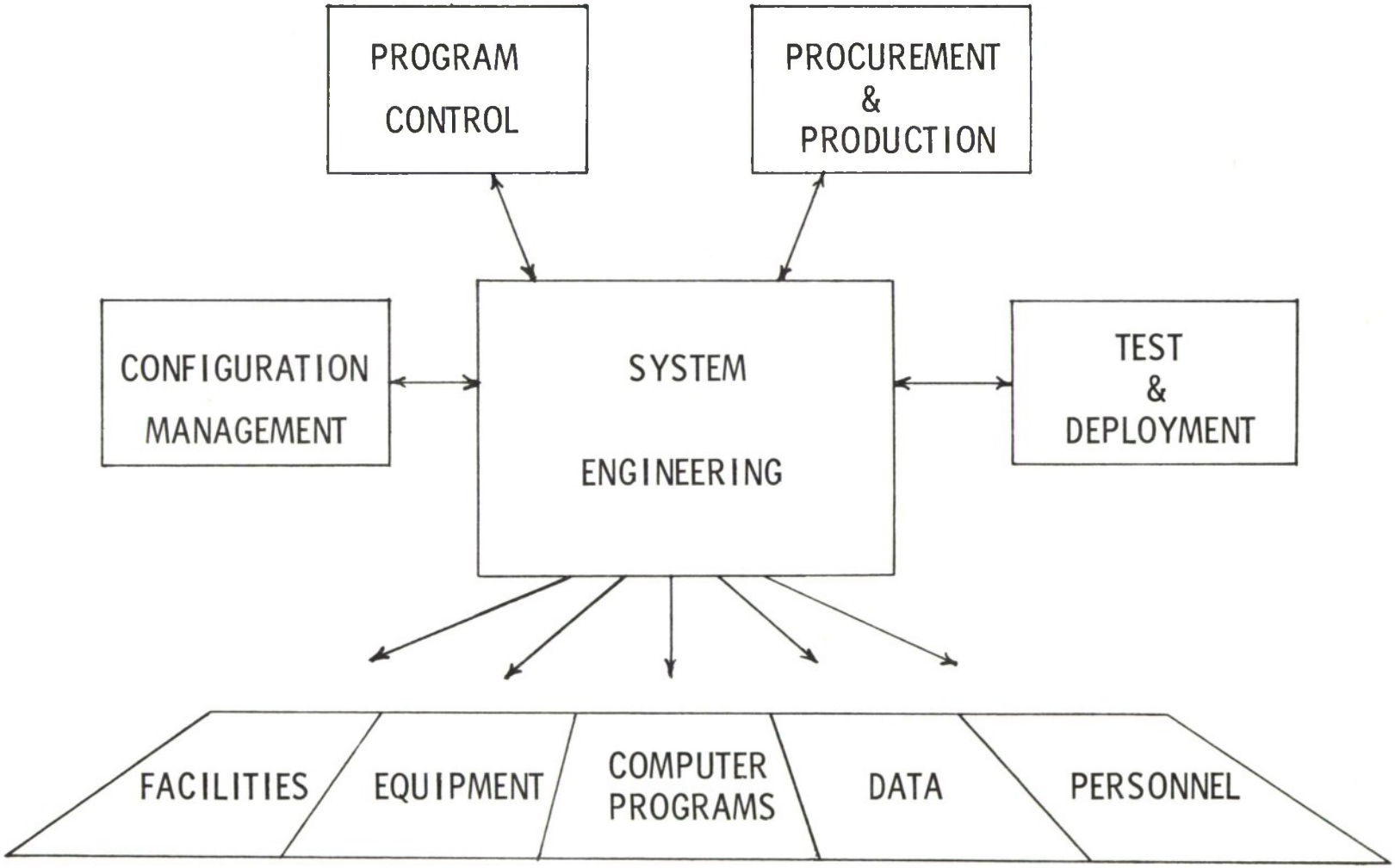

Figure 1

The inclusion of computer programs as a major element of the system, as illustrated in figure 1, represents a point of departure from the existing systems management techniques.

COMPUTER PROGRAMS WITHIN A SYSTEM

What is a Computer Program

Definitions of computer programs are as varied as the systems within which they function. Within the context of systems management, however, we do not require a concise technically accurate definition that is acceptable to all, but we must limit computer programs to some class of objects that we can effectively manage. For this purpose, computer programs are defined as a sequence of coded instructions and data contained on magnetic tape, punched cards or some other appropriate medium in a form suitable for insertion into a digital computer. Within the contractual entities defined by the Air Force, i.e. manufactured products, data (documentation), and services, the computer program possesses properties similar to a manufactured product and similar to data items. Because of the similarities to equipments and a desire for effective technical control, the Air Force and NASA have chosen to class all computer programs as manufactured products, i.e. contract end items.

A Functional Element. The computer program is as much a functional element of a system as is a facility or a piece of equipment. The computer program usually performs functions that were performed by equipment or personnel in the past. It generally performs these functions with more speed or accuracy than was previously available and thus has become an essential element of the system. In many instances the computer program is basically a set of automatic operating procedures.

System Compatibility. Since the computer program is a functional element of the system, it must interface with other system elements. As with other system interfaces, all of the computer program interfaces must be accurately defined throughout the system design process. The obvious interface between the computer program and the computer is only the beginning, for the computer program will also interface with other computer programs, external equipment and personnel.

Design Integrity. Throughout the design and development of computer programs, emphasis must be placed on design integrity. Is the computer program, as designed, cost effective in terms of system timing, use of available computer memory, etc.? Will the computer program satisfy all of the design requirements? These and other questions must be continuously asked throughout the design and development process.

Performance Verification. The complexity of a computer program requires that a systematic test program be used to determine compliance with contractual requirements. The performance of both individual computer programs and the total system must be verified. It is not unusual for the testing phase of computer program design and development to represent 50% or more of total computer program costs.

System Implications

The definition of computer programs as deliverable contract end items is the basis for including computer programs in the systems approach. Established systems management techniques must be tailored, though, to effectively manage computer programs within a system. The systems approach must be tailored to take advantage of the similarities between equipment and computer programs while catering to the uniqueness of computer programs.

Support Items. Computer programs require most of the support items that are normally required for equipment. Thus operator handbooks, manuals, etc. must be written and verified for computer programs. Training requirements must also be considered as well as manning requirements for the operational system. In addition, expendable supplies such as magnetic tape, punch cards, etc. must be made available.

Production. Production, in the sense of manufacturing a quantity of "chinese copies" of a piece of equipment, does not apply to computer programs. Once the initial design and development is concluded and the computer program is qualified, production is completed. Reproduction of a computer program on magnetic tape or a deck of cards to obtain an identical copy is a relatively simple and inexpensive process involving only peripheral computer equipment.

Spare Parts. Unlike equipment, computer programs do not wear out or degenerate as a function of time. Unless tampered with, a sequence of computer instructions will continue to perform the same function endlessly until the computer program is affected by some external source. True, failure may occur within a computer program, but the failure is always due to a latent design deficiency. Obviously, then, spare parts are not required and provisioning, useful life, interchangeability, etc. do not apply. Since the computer program does not require spare parts, maintenance in the accepted sense of the word does not apply. There is however, a term "Maintenance of computer programs" that refers to the continual process of correcting latent deficiencies and implementing modifications within computer programs.

Reliability. Since a computer program never wears out it is virtually impossible to predict or analyze failure rates. Any failure of the computer program is a latent design deficiency and its occurrence cannot be predicted.

It is obvious then that a computer program cannot be designed for reliability and cannot be tested or evaluated for reliability. Reliability does not apply to computer programs as end items although the computer programs may be used to enhance system reliability.

Impact. The definition of computer programs as contract end items within a system provides a vehicle for emphasizing this important system element. Sufficient analysis conducted early in the system design can identify those system requirements that will affect the computer program design. If, for example, modular computer programs are required or multiprogramming is needed, these requirements can be identified before the detailed design of computer programs commences. This approach allows the Air Force to satisfy many of the objectives of DOD directive 3200.9[3] such as establishing firm and realistic performance specifications, precisely defining interfaces and responsibilities, identification of high risk areas, and establishing firm and realistic schedules and cost estimates during the acquisition of computer programs.

THE SYSTEMS APPROACH

Specification of Requirements

In applying the systems approach to computer based systems the computer programs must be given "equal time" even as early as the conceptual planning for the system. Early conceptual studies must consider the computer programs as a vital element of the system. The effects of performing functions by automated methods, as well as electrical or manual methods, must be considered. The system specification should identify all of the system/design requirements for the total system. In allocating the system requirements to system segments and contract end items, extensive analysis of the trade-offs between equipment, computer programs and personnel must be conducted. The result of this system analysis effort is to establish a system specification that identifies the system performance/design requirements, identifies all of the system segments and contract end items and allocates the design requirements to these contract end items. The system specification represents one of the first important steps in the system development process. As shown in figure 2 the system specification is the basis for all of the system design and development effort that follows.

From the system specification the individual contract end item specifications are developed. It is this preparation of a design specification, containing performance/design and test requirements, that is the key to applying systems management to computer programs. The design-to specification, or part I computer program contract end item (CPCEI) specification,[1] contains all of the performance, design and test

COMPUTER PROGRAM DESIGN FLOW

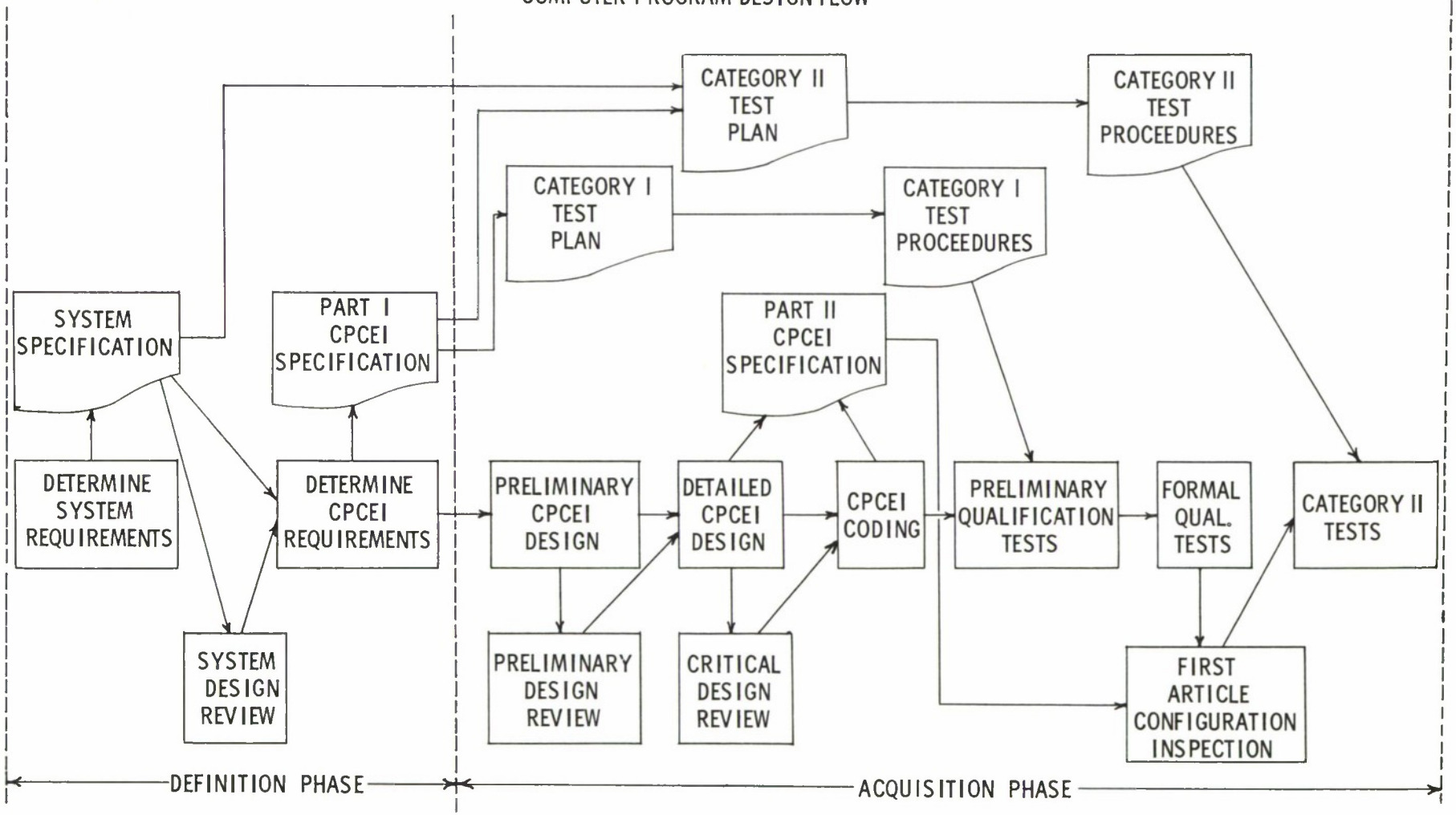

Figure 2

requirements for an individual computer program contract end item. The specification must identify and define all of the interfaces between the computer program CEI and other computer program and equipment CEI's. The design specification, once approved, will control the development of that computer program. Thus, the computer program CEI will be designed and qualified against its individual design specification.

Design Integrity

Throughout the development process the customer (in this case the government) should actively monitor the contractor's efforts in developing the system. If the contractor is left to work in a vacuum, as has happened in the past, the delivered system often does not satisfy the user. Both the contractor and the customer can benefit from the feedback provided by an exchange of technical information throughout the design and development process. In recent years this exchange of information on military systems has been provided by the conduct of technical design reviews[1] at the predetermined times in the process. The application of these design reviews to computer programs[4] provides the technical manager with a tool to assist in establishing the design integrity of computer programs within a system. The relationship of these design reviews to the system development process is indicated in figure 2.

System Design Review. The purpose of this first review is to study the contractor's system design approach. At the SDR a critical examination of the system design is performed to insure that a proper understanding of all design requirements exists. An analysis of contractor documentation in the form of functional diagrams, trade-off study reports, schematic diagrams, initial design specifications, etc. is conducted. A prime objective of the SDR is to review the allocation of functional requirements to the various system segments and contract end items. Thus, for computer programs, the SDR must insure that only those system design requirements that can be realistically satisfied by computer programs have been allocated to computer program contract end items (i.e. operational, utility, diagnostic, etc.). Prior to the conduct of the SDR, trade-off studies concerning equipments vs. computer programs must have been completed to provide a cost effective allocation of design requirements. Satisfactory completion of the SDR permits completion of the Part I specifications ("design to" specifications) for all computer program CEI's. These specifications form the basis for the second technical review in the design process.

Preliminary Design Review. The Preliminary Design Review (PDR) is usually held within 60 days after the start of the Acquisition Phase. The preliminary design of the computer program CEI is in progress based on the approved "design to" specifications for the end item. The purpose of the PDR is to evaluate the design approach for the end item or group of end items in light of the overall system requirements; thus, the prime objective of the PDR is achieving design integrity. A review of the

interfaces affecting the computer program contract end item is an important element of a PDR. Emphasis is placed on verification of detailed interfaces with equipment and with other computer program CEI's. At the PDR the instruction set of the computer to be used must be firmly established. The programming features of the computer, e.g. interrupts, multiprocessing, time sharing, etc. must be known. All external data formats and timing constraints must be identified. The computer program storage requirements and data base design are reviewed for technical adequacy at this time. The structure of the computer program contract end item is also reviewed at the PDR. During the initial design process for a complex end item the requirements of the Part I specification which are function-oriented are allocated to computer program components or modules. The allocation of functions to computer program components within the CPCEI is examined at the PDR. The primary product of the review at this level is establishing the integrity of the design approach, verifying compatibility with the Part I specification, and verifying the functional interfaces with other contract end items in order that detailed design of the computer program CEI can commence.

Critical Design Review. The Critical Design Review (CDR) is a formal technical review of the design of the computer program contract end item at the detailed flowchart level. It is accomplished to establish the integrity of the computer program design prior to coding and testing. This does not preclude any coding required prior to the CDR to demonstrate design integrity, such as testing of algorithms. In the case of a complex computer program CEI, as the design of each component proceeds to the detailed flowchart level, a CDR is held for that component. In this manner, the CDR is performed incrementally by computer program components and the reviews are scheduled to optimize the efficiency of the overall CDR for the end item as a whole. Due to the varying complexity of the parallel design efforts for computer program CEI components, it would be unreasonable to delay all of the components being developed to hold one CDR for the computer program end item.

At the CDR, the completed sections of the Part II computer program CEI specification (detailed technical description) are reviewed along with supporting analytical data, test data, etc. The compatibility of the CPCEI design with the requirements of the Part I specification is established at the CDR. "Inter" interfaces with other CPCEI's and "intra" interfaces between computer program components are examined to insure compatibility. Design integrity is established by review of analytical and test data, in the form of logic designs, algorithms, storage allocations and associated methodology. In general, the primary product of the CDR is to establish the design and development accomplished as the basis for contination of the computer program development cycle. Immediately following the CDR, coding of individual components takes place and the process of checkout and testing of the components begins.

First Article Configuration Inspection. When the design and testing of the computer program CEI is essentially completed, the Part II Specification is available for review. The Part II specification provides a complete and detailed technical description of the computer program CEI "as built" and functions as the primary document for use by programmers in correcting errors and designing changes to the computer program CEI. The technical accuracy and completeness of the Part II specification must be determined prior to acceptance of the document by the Air Force. The First Article Configuration Inspection (FACI) provides the vehicle for the required review of the Part II specification and is an audit of the Part II specification and the computer program CEI as delivered. The primary product of the FACI is the formal acceptance by the Air Force of the Part II specification as an audited and approved document. Air Force acceptance of the computer program CEI for Category II testing is based on the successful completion of the Category I Test Program and the FACI, but it does not relieve the contractor from meeting the requirements of the system specification. Subsequent to FACI, the configuration of the computer program CEI is essentially controlled at the machine instruction level so that the exact configuration is available for Category II system testing.

Design Verification

Testing, as defined by the Air Force, is divided into three classes or categories of testing, two of which, Category I and II[5] are important in development testing of Air Force systems and will be discussed here. Category I tests for computer program CEI's[4] are conducted by the contractor and will normally proceed in such a way that testing and functional demonstrations of selected functions or individual computer program components can begin early during acquisition and progress through successively higher levels of assembly to the point at which the complete computer program CEI is subjected to formal qualification testing. Since the total process is typically lengthy and represents the major expense of computer program acquisition for the system, the test program includes preliminary qualification tests at appropriate stages for formal review by the Air Force. While the tests are preliminary in nature (they do not imply acceptance or formal qualification), they do serve the necessary purposes of providing check points for monitoring the contractor's progress towards meeting design objectives and of verifying detailed performance characteristics which, because of sheer numbers and complexity, may not be feasible to verify in their entirety during formal qualification testing. Category II tests are complete system tests, including the qualified computer program end items, conducted by the Air Force with contractor support in as near an operational configuration as is practicable.

Category I (Qualification) Testing. The Category I test program verifies that the computer program contract end item satisfies the design/performance requirements of the Part I "design to" specification. The Category I test program must be designed to insure that all of the functional requirements, as translated into computer program components, are tested and that requirements are not lost in the translation. The program is divided into two major classes of tests: Preliminary Qualification Tests (PQT) and Formal Qualification Tests.

Preliminary Qualification Testing (PQT). Preliminary qualification tests are designed to verify the performance of individual components prior to an integrated formal qualification of the complete computer program CEI. The PQT phase is conducted incrementally by components in the same manner as the Critical Design Review. Figure 3 depicts the relationship between CDR and the Category I test program. The crosshatched blocks in Figure 3 indicate coding of individual computer program components. The Preliminary Qualification Tests are modular and a "building block" effect occurs as testing progresses. As each computer program component is added and each PQT conducted, increased confidence develops in the computer program CEI being tested.

Formal Qualification Testing (FQT). Formal qualification tests represent the final step in Category I testing of a computer program CEI. They insure that the complete CEI actually meets the Part I specification performance requirements. However, the necessity for formal qualification places more stringent requirements on the computer program's"environment"; it must now leave the confines of an artificial world and enter the realm of the real world.

Qualification testing of a complex computer program contract end item requires extensive use of simulation techniques. The use of these techniques is dictated by the high cost of providing overhead computer facilities or by the unavailability of new computers undergoing a parallel design and development effort. Although Preliminary Qualification Tests will make maximum use of simulation techniques, the Formal Qualification Tests will generally require live inputs, live outputs and operationally-configured equipment. A prerequisite, then, of FQT is usually the installation and checkout of the computer program CEI in an operationally-configured system at the Category II test site. To provide reliable data during FQT of a computer program CEI, fully installed and checked out equipment should be available. Subsequent to installation and checkout of the computer program CEI, FQT is conducted. The conclusion of FQT signals the end of the Category I test program. The computer program CEI should be fully qualified and all of the requirements of the Part I specification should be satisfied except for those requirements of the Part I specification that can only be demonstrated during a Category II system test. After successfully passing this phase of testing, the computer program is fully integrated into the system and is ready for system testing.

COMPUTER PROGRAM CONTRACT END ITEM

CRITICAL DESIGN REVIEW AND CATEGORY I TESTS

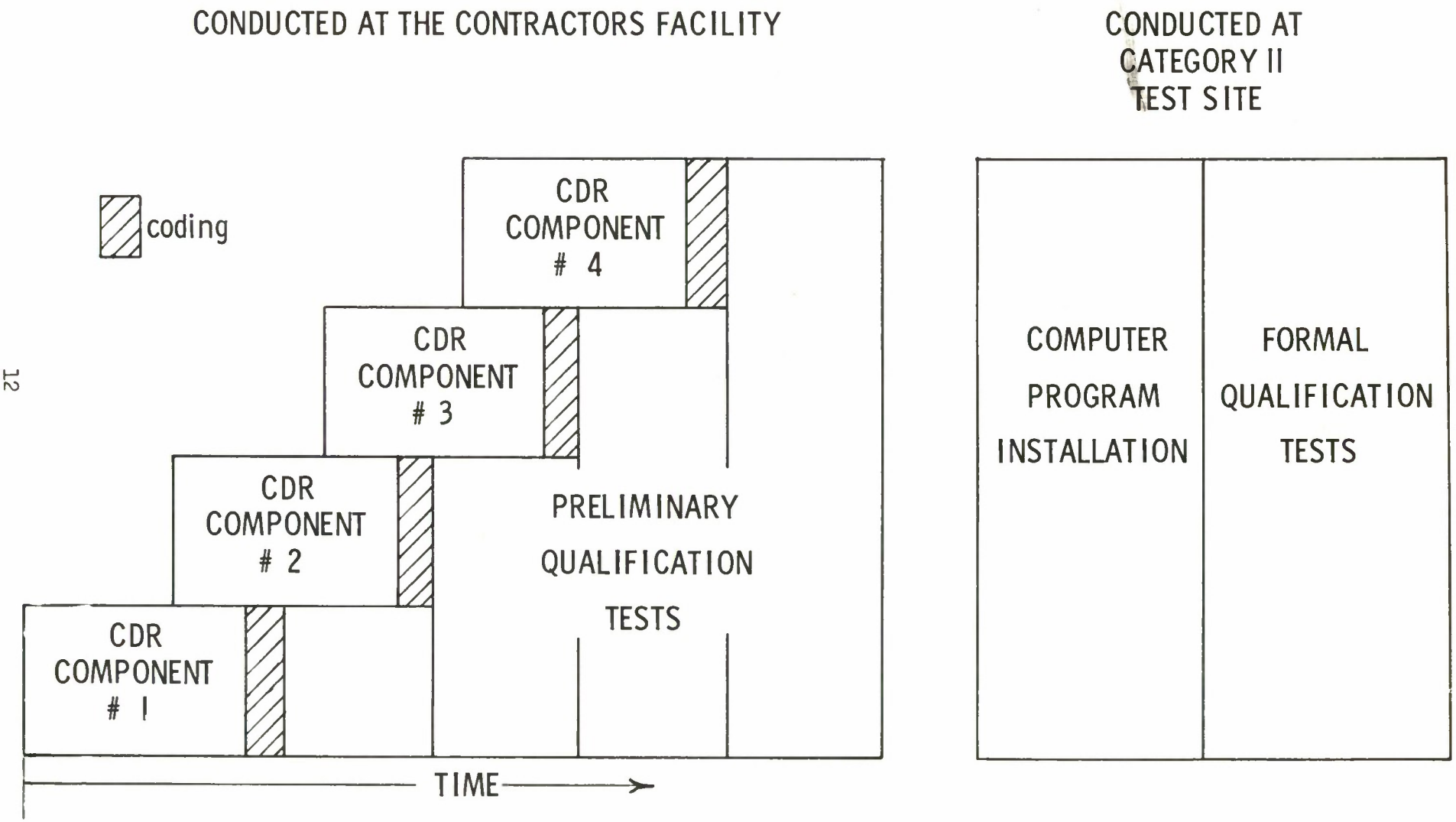

Figure 3

Category II (System) Testing. At the conclusion of Category I testing, the Air Force conducts an extensive Category II system test program with the objective of demonstrating that the system meets system performance/design requirements of the System Specification. Insofar as the computer programs are concerned, Category II testing will verify their compatibility with the system and their integrated performance in meeting system requirements in the live environment, with operational communications, personnel, etc. Residual and design errors discovered in this phase of testing are corrected by the contractor prior to the system becoming operational.

SOME TYPICAL EXAMPLES

An Expensive Education

In the past the Air Force has had some painful experience in the acquisition of computer based systems. In the acquisition of one recent large computer based system, problems generated in the development of the information processing segment proved so great that they prevented the system from becoming operational. One of the factors that contributed to the failure of the project was the lack of a system specification. As a result no explicitly defined nor commonly understood set of system objectives was established. Consequently, specific system requirements could not be allocated to individual computer programs. The design documents for the computer programs were generally not definitive enough and not subject to controls. The net effect was that a design requirements baseline was never established. The contractor was, to a certain degree, left to design and develop the computer programs on his own without detailed guidance and feedback from the Air Force resulting in computer programs that never did satisfy the users requirements even after repeated redesigns. The cost of the computer programs grew to five times the original estimates during the design and development. When the decision was made to delete the system from the inventory approximately $27,000,000 had been spent on the system, of which about 55% represented computer program costs, and additional funds were needed to meet the system requirements. Even those elements of the system that operated properly suffered from inadequate and inaccurate documentation and thus could not be used to maximum effectiveness. It cannot be claimed that the use of a specific technique or group of techniques would have solved all of the problems associated with this system. It is clear, however, that the use of a systems approach that included the computer programs would have greatly increased the probability of achieving the design goals.

Some Recent Improvements

BUIC, an acronym for Back-Up Interceptor Control System, is an air defense system that enhances the survivability of North America's air

defense in a post attack environment. The BUIC system has progressed in evolutionary steps from the manual BUIC I system to the sophisticated BUIC III system that incorporates a large modular digital computer. The BUIC system represents the first attempt at ESD to apply systems management to a total computer based system.

Draft versions of the ESD Exhibit[1] on configuration management of computer programs were applied to the BUIC contracts. The system specification identified four computer program contract end items: Air Defense Computer Program CEI, Utility Computer Program CEI, System Exercise Computer Program CEI, and Confidence-Diagnostic Computer Program CEI. Specific system requirements were allocated to each of the computer program CEI's and detailed design requirements with qualitative measures, where possible, were established for each CEI. Fault detection and isolation are typical examples of the requirements placed on the Confidence/Diagnostic CEI while requirements such as preparation of exercise tapes and control of system exercise missions were placed on the System Exercise CEI. In addition the interfaces between the various computer program and equipment CEI's were defined in the individual design specifications. Particular emphasis was placed on the interface between the Air Defense and Confidence/Diagnostic computer programs for two reasons: first, the unique design of BUIC wherein two programs operate in parallel (Air Defense and Confidence/Diagnostic) using the redundant computer modules creates an exceptionally complex interface; second, the Confidence/Diagnostic program was written by the computer manufacturer while the rest of the computer programs were written by a second contractor.

A Modular Computing System. It was during a BUIC II design review that the full system impact of computer programs was discovered. The equipment manufacturer had concluded that the system reliability requirements could not be met with the proposed equipments. Even the use of system redundancy would not provide the desired system Mean Time between failure (MTBF) with the available equipment end items. Analysis of the modular equipment and the Confidence/Diagnostic computer programs led to a computer program-controlled modular computing system with redundant modules. The system, described by Blanton,[6] is illustrated in figure 4 and shows the redundant modules. During normal operation the control of the computing modules is shared by two computer programs operating in parallel: an operational (Air Defense) program and a back-up (Confidence/Diagnostic) program. The operational program performs air defense functions, limited failure detection and system reconfiguration and startover. The back-up program exercises the modules in the back-up system and detects failures to maintain confidence in the redundant modules should they be needed in the "operational" system. To guard against failures in the "operational" system remaining undetected for long periods of time the modules are periodically switched between the "operational" and "back-up" systems. In BUIC the complete failure

RELIABILITY BLOCK DIAGRAM

BUIC CENTRAL COMPUTING MODULES

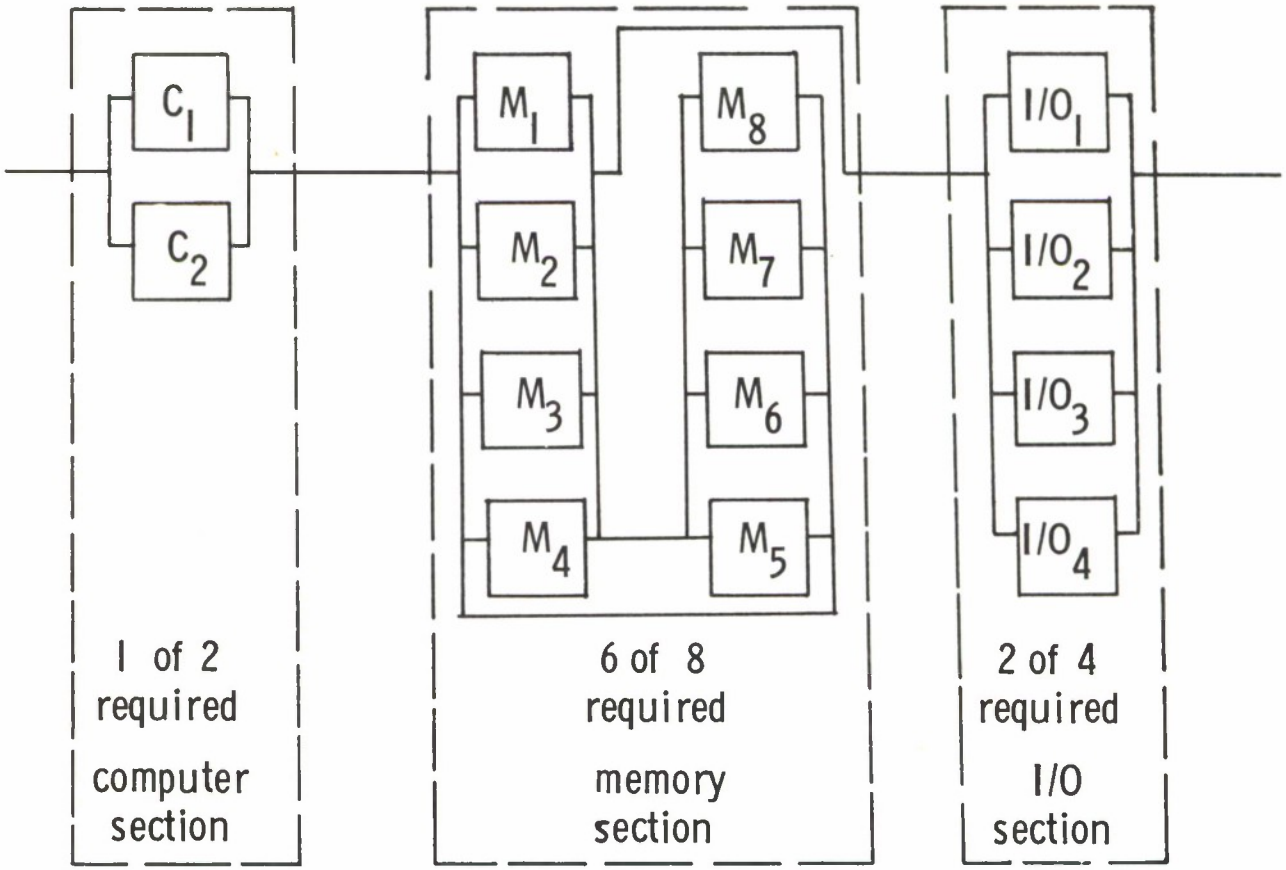

Figure 4

detection, failure isolation and system recovery is accomplished in less than 30 seconds. The 30 second recovery time does not seriously degrade system operation since the "operational" system is capable of restarting where it was halted without much loss of information. Blanton[6] has calculated the MTBF of the modular system in figure 4 to be 87,858 hours. This represents a system 33 times more reliable than a duplexed system, yet the duplexed system requires a 23% increase in modules.

In this example the full value of computer programs within a system was realized early in the design stages, but only as a result of the equipment being unable to meet design requirements.

Conclusion

The broadening of systems management to include computer programs as well as equipment, facilities, etc. can provide a powerful tool for the technical manager. These techniques can provide definitive design requirements and increase technical control in the design and development of computer programs. They improve the computer programmer's position in the design process by insuring that his requirements, interfaces, etc. are properly emphasized from the system's conception through its attainment of operational status.

In applying the systems approach one cannot equate computer programs with equipments; rather, the requirement for similar technical controls must be recognized with due consideration for the inherent differences between computer programs and equipment. To realize the full value of computer programs, increased emphasis must be placed on systems analysis of computer programs. As shown in the BUIC system, the potential of computer programs is often far above that initially considered and achieving this potential may require much innovation. It is only through a systems approach that the full systems effectiveness of computer programs will be realized.

BIBLIOGRAPHY

1. ESD Exhibit EST-1, Configuration Management Exhibit for Computer Programs. Test Division of the Technical Requirements and Standards Office, Electronic Systems Division, Air Force Systems Command, L. G. Hanscom Field, Bedford, Massachusetts, May 1966.

2. ESD Exhibit EST-2, Management Procedures for Computer-Based Command and Control Systems. Test Division of the Technical Requirements and Standards Office, Electronic Systems Division, Air Force Systems Command, L. G. Hanscom Field, Bedford, Massachusetts, May 1966.

3. Department of Defense Directive 3200.9, Initiation of Engineering and Operational Systems Development. Washington, D. C. Department of Defense, 1 July 1965.

4. Piligian, M. S. and Pokorney, Captain J. L., USAF. Air Force Concepts for the Technical Control and Design Verification of Computer Programs. Proceedings of the Spring Joint Computer Conference, April 1967.

5. AFR 80-14, Testing/Evaluation of Systems, Subsystems and Equipments. Washington, D. C. Department of the Air Force, 14 August 1963.

6. Blanton, Captain Harvey B. Jr. and Schell, Captain Roger R., USAF. Reliability and Maintainability of Modular Computing Systems. Electronic Systems Division, Air Force Systems Command, L. G. Hanscom Field, Massachusetts, Unpublished paper.

UNCLASSIFIED
Security Classification

DOCUMENT CONTROL DATA - R&D

(Security classification of title, body of abstract and indexing annotation must be entered when the overall report is classified)

1. ORIGINATING ACTIVITY *(Corporate author)*
Technical Requirements and Standards Office
L. G. Hanscom Field
Bedford, Mass. 01730

2a. REPORT SECURITY CLASSIFICATION
Unclassified

2b. GROUP
N/A

3. REPORT TITLE
A SYSTEMS APPROACH TO COMPUTER PROGRAMS

4. DESCRIPTIVE NOTES *(Type of report and inclusive dates)*
None

5. AUTHOR(S) *(Last name, first name, initial)*
Pokorney, Joseph L., Captain
Mitchell, Wallace E., Captain

6. REPORT DATE
February 1967

7a. TOTAL NO. OF PAGES
17

7b. NO. OF REFS
6

8a. CONTRACT OR GRANT NO.
IN-HOUSE

b. PROJECT NO.

c.

d.

9a. ORIGINATOR'S REPORT NUMBER(S)
ESD-TR-67-205

9b. OTHER REPORT NO(S) *(Any other numbers that may be assigned this report)*

10. AVAILABILITY/LIMITATION NOTICES
Release of this document is unlimited.

11. SUPPLEMENTARY NOTES

12. SPONSORING MILITARY ACTIVITY
Technical Requirements and Standards Office,
Electronic Systems Division, AFSC, USAF,
L. G. Hanscom Field, Bedford, Mass. 01730

13. ABSTRACT
Recent experience at ESD in acquiring complex computer based systems has identified a deficiency in existing systems management techniques in the area of computer programs. The systems management techniques generally in use were designed for "equipment" systems and need to be expanded to include computer programs. This paper describes an ESD approach to adapting existing AFSC system management techniques to computer programs. Procedures for insuring system compatibility, design integrity and technical control are discussed and a method for achieving design verification and qualification is presented. Particular emphasis is placed on the relationship of these techniques to computer programs as elements of large computer based systems. The application of these techniques is illustrated through selected examples taken from current ESD system procurements.

DD FORM 1 JAN 64 1473

UNCLASSIFIED
Security Classification

14. KEY WORDS	LINK A ROLE	LINK A WT	LINK B ROLE	LINK B WT	LINK C ROLE	LINK C WT
Systems Computer Programs Systems Management Management						

INSTRUCTIONS

1. ORIGINATING ACTIVITY: Enter the name and address of the contractor, subcontractor, grantee, Department of Defense activity or other organization *(corporate author)* issuing the report.

2*a*. REPORT SECURITY CLASSIFICATION: Enter the overall security classification of the report. Indicate whether "Restricted Data" is included. Marking is to be in accordance with appropriate security regulations.

2*b*. GROUP: Automatic downgrading is specified in DoD Directive 5200.10 and Armed Forces Industrial Manual. Enter the group number. Also, when applicable, show that optional markings have been used for Group 3 and Group 4 as authorized.

3. REPORT TITLE: Enter the complete report title in all capital letters. Titles in all cases should be unclassified. If a meaningful title cannot be selected without classification, show title classification in all capitals in parenthesis immediately following the title.

4. DESCRIPTIVE NOTES: If appropriate, enter the type of report, e.g., interim, progress, summary, annual, or final. Give the inclusive dates when a specific reporting period is covered.

5. AUTHOR(S): Enter the name(s) of author(s) as shown on or in the report. Enter last name, first name, middle initial. If military, show rank and branch of service. The name of the principal author is an absolute minimum requirement.

6. REPORT DATE: Enter the date of the report as day, month, year; or month, year. If more than one date appears on the report, use date of publication.

7*a*. TOTAL NUMBER OF PAGES: The total page count should follow normal pagination procedures, i.e., enter the number of pages containing information.

7*b*. NUMBER OF REFERENCES: Enter the total number of references cited in the report.

8*a*. CONTRACT OR GRANT NUMBER: If appropriate, enter the applicable number of the contract or grant under which the report was written.

8*b*, 8*c*, & 8*d*. PROJECT NUMBER: Enter the appropriate military department identification, such as project number, subproject number, system numbers, task number, etc.

9*a*. ORIGINATOR'S REPORT NUMBER(S): Enter the official report number by which the document will be identified and controlled by the originating activity. This number must be unique to this report.

9*b*. OTHER REPORT NUMBER(S): If the report has been assigned any other report numbers *(either by the originator or by the sponsor)*, also enter this number(s).

10. AVAILABILITY/LIMITATION NOTICES: Enter any limitations on further dissemination of the report, other than those imposed by security classification, using standard statements such as:

(1) "Qualified requesters may obtain copies of this report from DDC."

(2) "Foreign announcement and dissemination of this report by DDC is not authorized."

(3) "U. S. Government agencies may obtain copies of this report directly from DDC. Other qualified DDC users shall request through
_____."

(4) "U. S. military agencies may obtain copies of this report directly from DDC. Other qualified users shall request through
_____."

(5) "All distribution of this report is controlled. Qualified DDC users shall request through
_____."

If the report has been furnished to the Office of Technical Services, Department of Commerce, for sale to the public, indicate this fact and enter the price, if known.

11. SUPPLEMENTARY NOTES: Use for additional explanatory notes.

12. SPONSORING MILITARY ACTIVITY: Enter the name of the departmental project office or laboratory sponsoring *(paying for)* the research and development. Include address.

13. ABSTRACT: Enter an abstract giving a brief and factual summary of the document indicative of the report, even though it may also appear elsewhere in the body of the technical report. If additional space is required, a continuation sheet shall be attached.

It is highly desirable that the abstract of classified reports be unclassified. Each paragraph of the abstract shall end with an indication of the military security classification of the information in the paragraph, represented as *(TS)*, *(S)*, *(C)*, or *(U)*.

There is no limitation on the length of the abstract. However, the suggested length is from 150 to 225 words.

14. KEY WORDS: Key words are technically meaningful terms or short phrases that characterize a report and may be used as index entries for cataloging the report. Key words must be selected so that no security classification is required. Identifiers, such as equipment model designation, trade name, military project code name, geographic location, may be used as key words but will be followed by an indication of technical context. The assignment of links, rules, and weights is optional.