BRL
1353
c,2A

AD 6[illegible]0087

BRL R 1353

BRL

REPORT NO. 1353

A COMPARATOR CALIBRATION METHOD

by

Heinz G. Poetzschke

January 1967

[illegible] U.S. ARMY
[illegible] 21005

Distribution of this document is unlimited.

U. S. ARMY MATERIEL COMMAND
BALLISTIC RESEARCH LABORATORIES
ABERDEEN PROVING GROUND, MARYLAND

Destroy this report when it is no longer needed.
Do not return it to the originator.

The findings in this report are not to be construed as an official Department of the Army position, unless so designated by other authorized documents.

The use of trade names or manufacturers' names in this report does not constitute indorsement of any commercial product.

B A L L I S T I C R E S E A R C H L A B O R A T O R I E S

REPORT NO. 1353

JANUARY 1967

A COMPARATOR CALIBRATION METHOD

HEINZ G. POETZSCHKE

Ballistic Measurements Laboratory

Distribution of this document is unlimited.

U.S. ARMY
21005

RDT&E Project No. 1P523801A286

A B E R D E E N P R O V I N G G R O U N D, M A R Y L A N D

B A L L I S T I C R E S E A R C H L A B O R A T O R I E S

REPORT NO. 1353

HGPoetzschke/ss
Aberdeen Proving Ground, Md.
January 1967

A COMPARATOR CALIBRATION METHOD

ABSTRACT

A method is described for calibrating precision comparators by using grid plates which have been calibrated by means of a triangulation method based exclusively on distance measurements. The method used for calibrating the grid plate provides measurements of the x, y coordinates for selected grid intersections to an accuracy better than $\pm$ 1 μ.

Using calibrated grid plates, the comparator may be calibrated to determine instrument constants such as:

1. Overall scalers of the measuring screws.
2. Non-orthogonality between the x and y movements.
3. Translation and rotation between grid and comparator coordinate systems.

The results of a number of calibrations are shown.

TABLE OF CONTENTS

		Page
	ABSTRACT	3
I.	INTRODUCTION	7
II.	MEASURING METHOD	7
	Grid Calibration	7
	Comparator Calibration	14
III.	ADJUSTMENTS	14
	Grid Calibration	14
	Comparator Calibration	20
IV.	RESULTS	23
	DISTRIBUTION LIST	29

I. INTRODUCTION

The Ballistic Research Laboratories (BRL) decision to develop an optimum photogrammetric triangulation system led to an increased effort in basic research in analytical photogrammetric methods and the associated development of precision instrumentation. Theoretical research resulted in the development of an analytical method for data reduction, while instrument research led to the development of a precision measuring system, which includes the BRL sponsored Ballistic Camera System (Wild BC 4) and a precision coordinate measuring instrument, the Wild STK-1 Stereocomparator.

The Wild-Stereocomparator is a highly precise coordinate measuring instrument based on the principle of parallax measurements. It is adjusted by the manufacturer to meet a particular level of accuracy when used in accordance with the manufacturer's specifications. However, by proper calibration of the instrument it is possible to achieve additional accuracy in the measurements.

We decided to perform the required calibration in two steps: first, to calibrate precision grid plates by a zero method, second, to calibrate the comparator using the calibrated grid plates as a standard. The first step results in a set of Cartesian coordinates for a number of selected grid points, while the second step gives values for overall scales of the precision lead screws for the non-orthogonality of the x-y and p_x-p_y movements respectively, and for the translation and rotation existing between the grid and the comparator coordinate systems.

II. MEASURING METHOD

Two procedures were used in these calibrations.

Grid Calibration

The method is based on the principle of trilateration. The sides and diagonals of a number of squares, formed by selected grid line intersections, are measured. These measurements are compared with a

calibrated glass scale. Since only difference measurements are introduced, personal and environmental systematic errors are practically eliminated and the method becomes a null method. By treating various combinations of squares, the final point coordinates are obtained with standard errors which are less than those inherent in the individual length measurements.

On the grid plate, whose grid measures 23 x 23 cm, 25 grid line intersections located symmetrically with respect to the center of the grid plate occupy a square of 20 cm side length. This square is subdivided into 9 overlapping squares of 10 cm side length and again subdivided into 16 squares of 5 cm side length (Figure 1). It should be noted that a square with maximum side length of 21 cm could be readily subdivided to point distances of 3 cm, as compared to the presently obtained 5 cm and still allow a reliable numerical solution when using large scale computers. The use of a larger number of adjusted control points on the grid would certainly increase the reliability of the comparator calibration, but would have little effect on the accuracy of the grid calibration. From the standpoint of economy it is doubtful that the additional effort could be justified.

Each distance in any of the squares is derived from coordinate differences; therefore, the coordinates of the endpoints of the distance must be determined. Because of the "uncleanness" in the engraving of the grid lines at their intersections, four auxiliary points around the intersection are used, within about 100μ of the intersection (Figure 2a). The point of intersection is then computed by using Cramer's rule. The grid lines are nominally ten microns wide so a ten micron dot is used, as a measuring mark, which, with a 40 power magnification provides a setting precision of $\pm 0.3\mu$ for an average of 10 measurements. This precision is somewhat affected by the slightly varying width and blackness of the grid lines.

Calibrated glass scales of 20 cm length are used as standards and serve to eliminate the comparator error. The calibration of the glass scales was performed by the Federal Bureau of Measures and Weights, Switzerland, with an accuracy of $\pm 0.5\mu$ for any of the graduation lines.

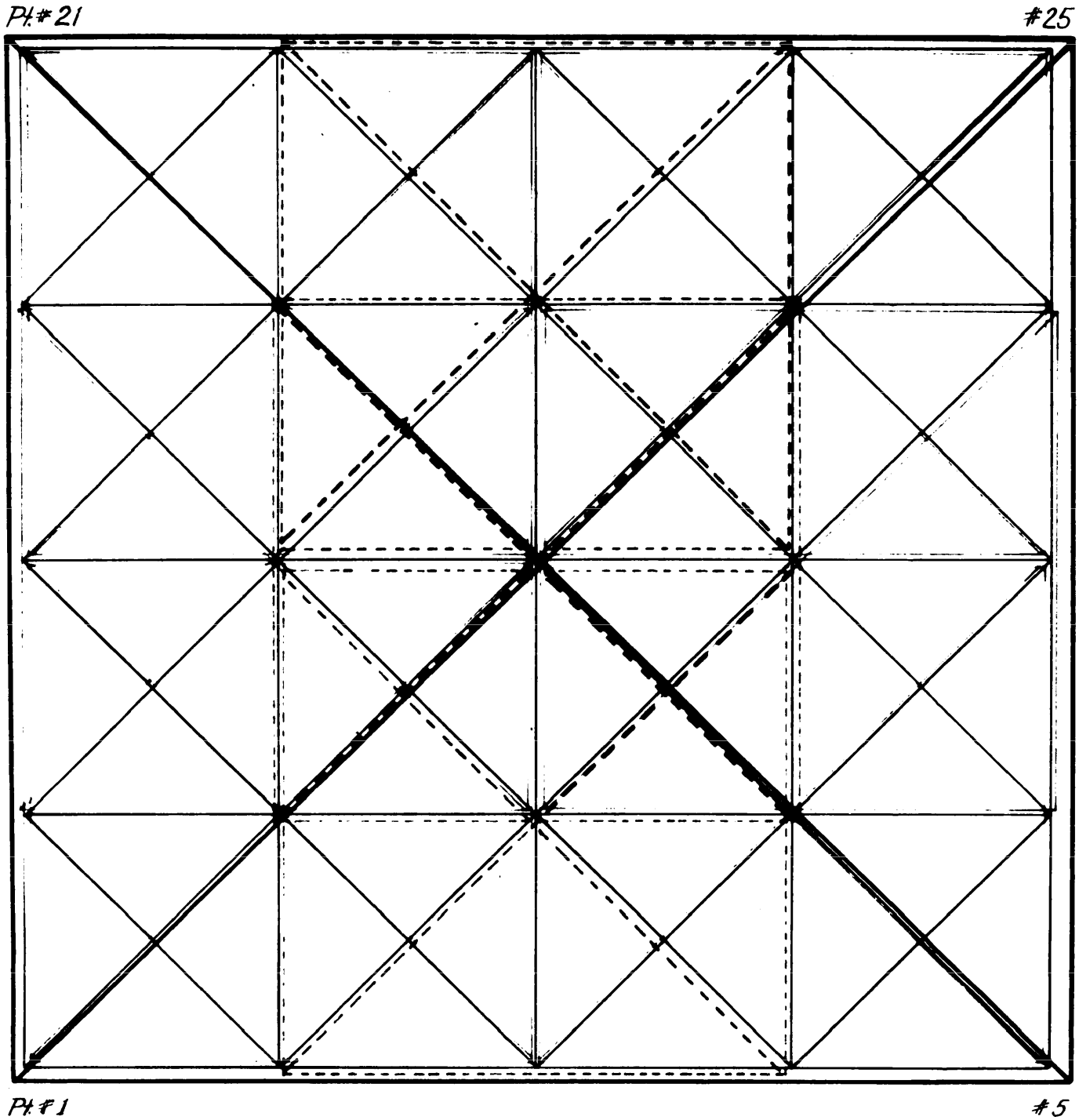

Fig. 1 Arrangement of Squares on Grid Plate

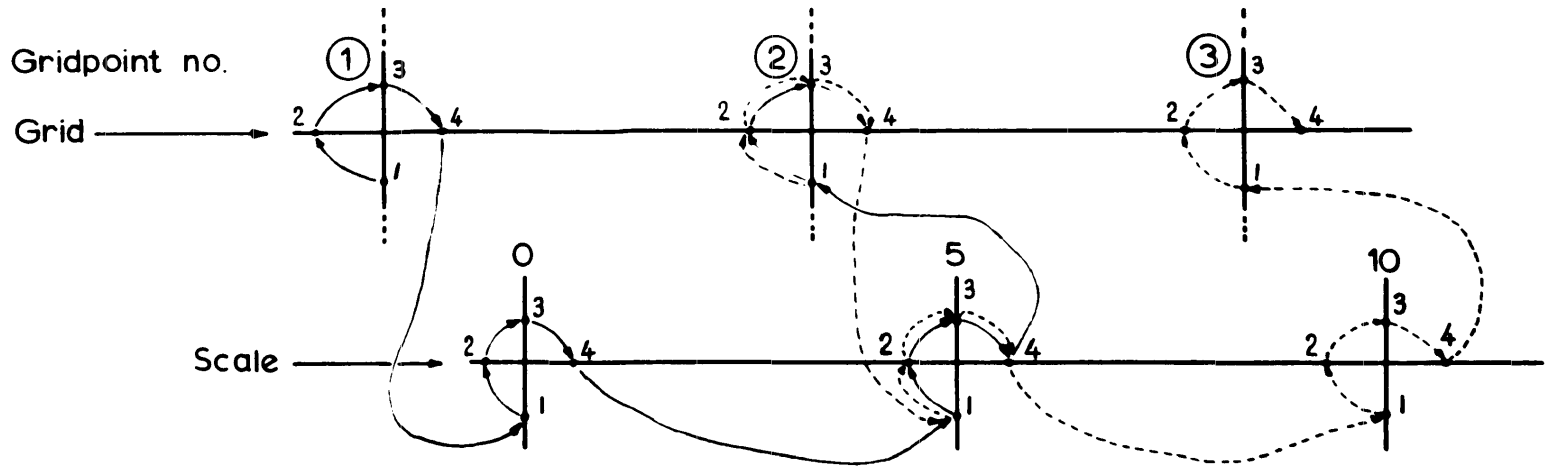

Fig. 2a Example of Sequence of Distance Measurements

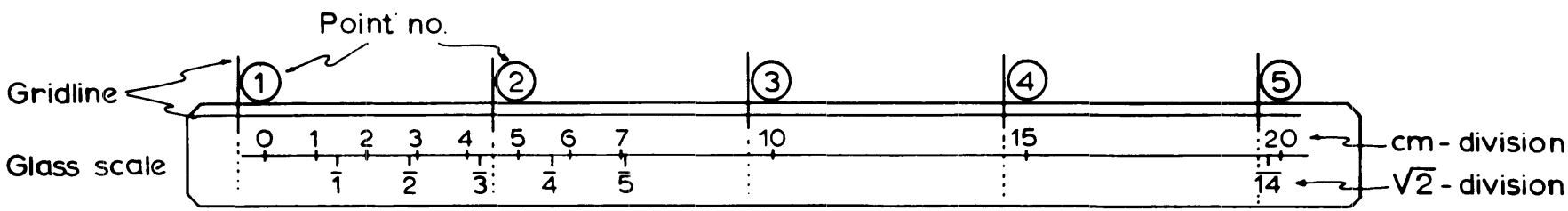

Fig. 2b Glass Scale Positioned on Grid

This amount was considered small enough to be negligible in the least squares adjustment procedure. The scales are manufactured of the same material as the grid plates, with a graduation from zero to 20 centimeter in one-centimeter steps and in $\sqrt{2}$ - steps. The graduation lines have the same nominal widths as the grid lines, and a center line is engraved to produce intersections with the graduations, so that a scale distance can be measured the same as a grid distance. The glass scale is mounted on the grid plate, approximately parallel to the grid line under observation (Figure 2b). A misalignment of 100μ for a distance of 20 cm introduces an error of only 0.025μ.

The initial position of the grid plates on the comparator stages was such that the serial number was on the right side and the "peg and pin" closest to the operator. Then, point No. 1 is in the lower left-hand corner with point No. 5 in the lower right-hand corner.

Each grid and scale distance is measured independently. The sequence of the measurements is shown in (Figure 3a). Considering the first line in the X-(left-right) direction from point No. 1 to point No. 5, the measuring procedure for the first two distances is: point No. 1 grid, No. 1 scale, No. 2 scale and No. 2 grid. This completes the first distances. The next distance between points No. 2 and No. 3 starts again with point No. 2 grid, No. 2 scale, and then proceeds to No. 3 scale and No. 3 grid. All distances are measured in this fashion (Figure 3b). To measure the five lines in the Y-direction, the grid plate is turned clockwise 90°, so that point No. 25 will be positioned at the lower right-hand corner. The measurements for the diagonal lines are made with the plate rotated back to its initial position (Figure 4).

In routine operation the comparator coordinates, to the nearest micron, are recorded automatically on a typewriter and punched on a card. However, in the calibration procedure it is necessary to read the dials of the measuring spindles to one tenth of a micron and to manually punch the results on a card. These additional coordinate readings will be used in the later

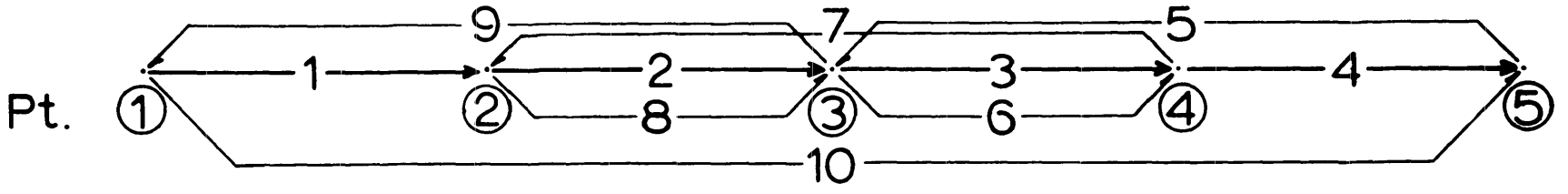

Fig. 3a Sequence of Measuring a Single Grid Line

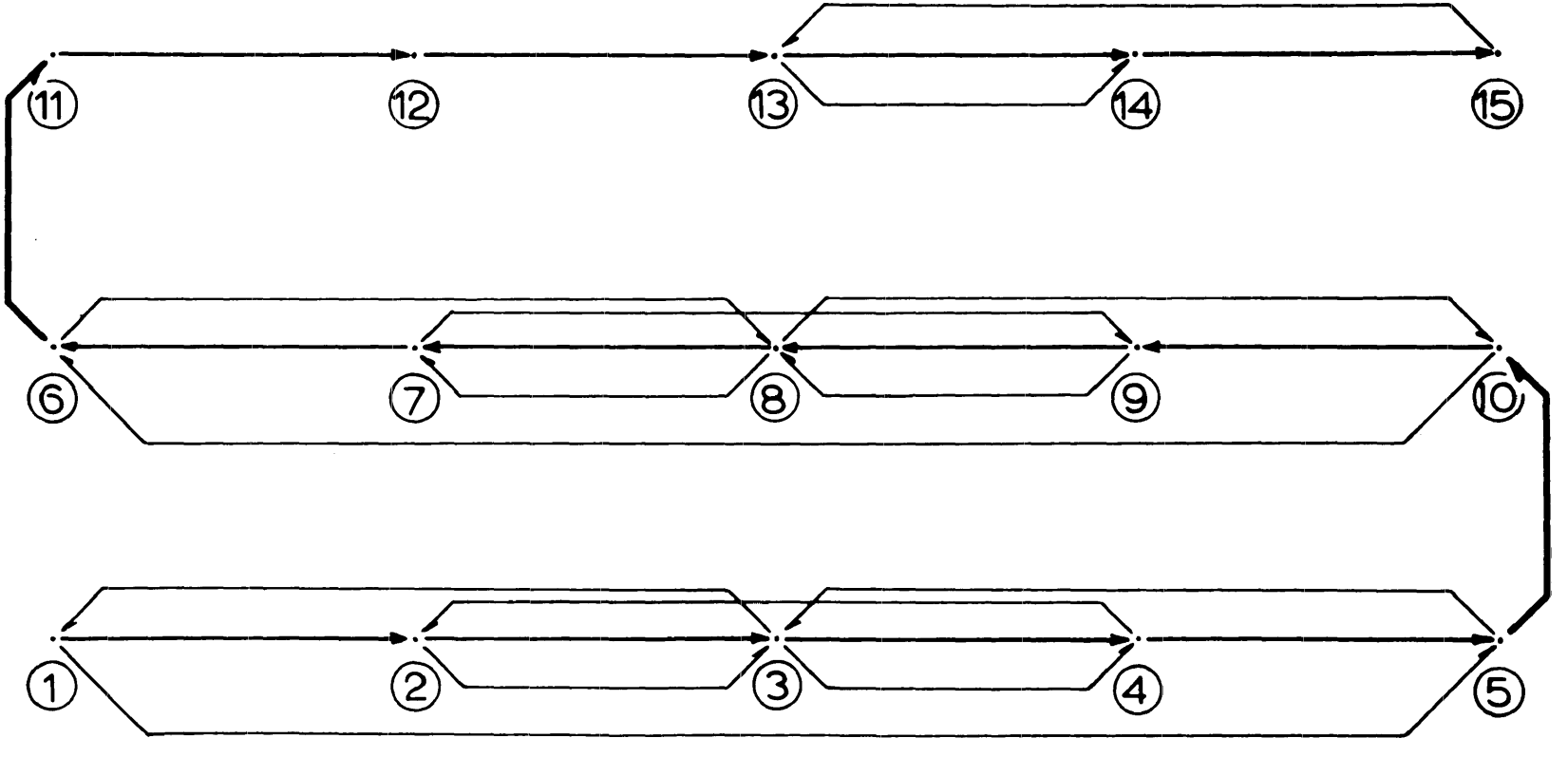

Fig. 3b Procedure of Distance Measurements

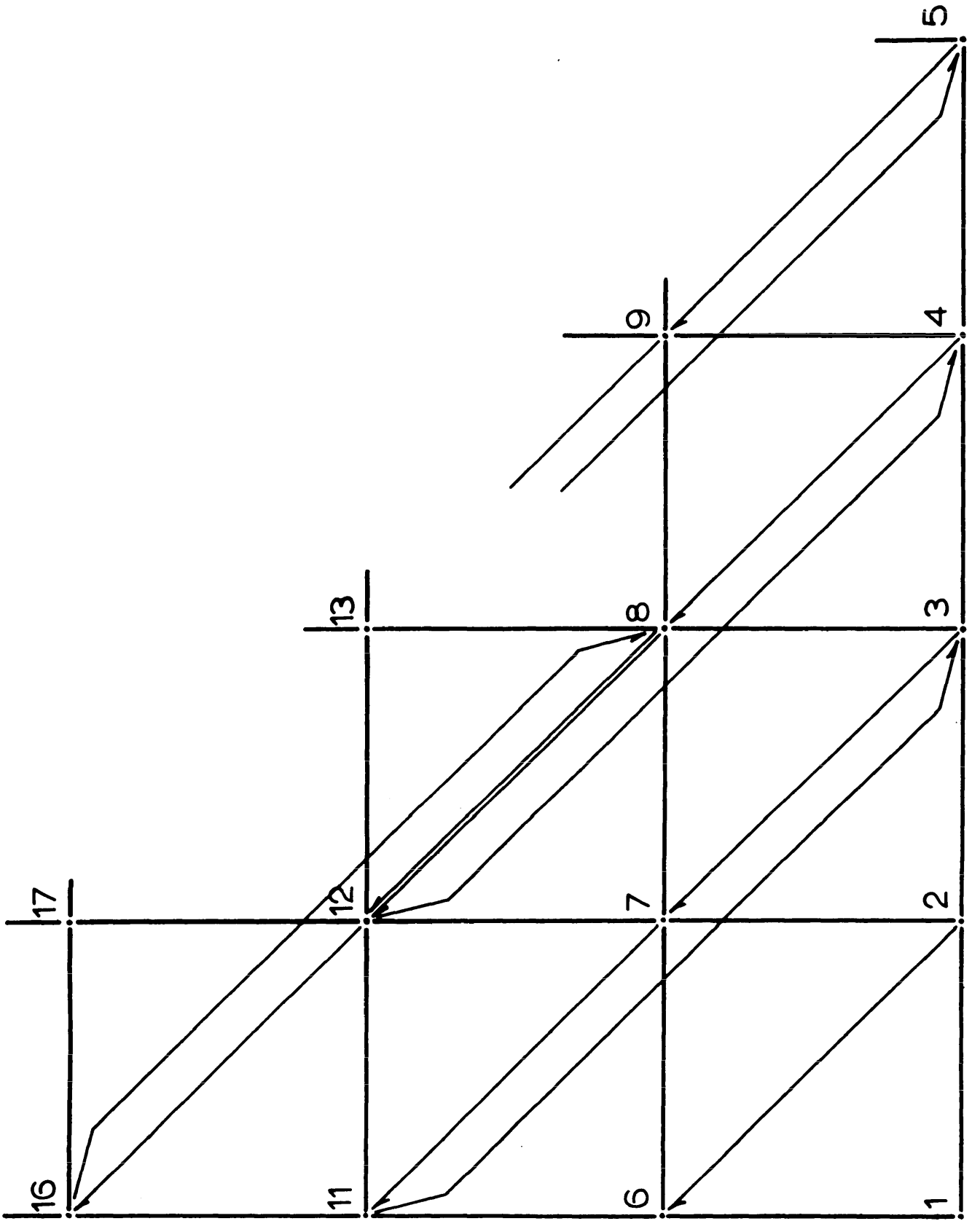

Fig. 4 Principle of Measurement of Diagonals

computations as indicated by Wooten.* An additional check assures that the fractional readings lie within a tolerance indicated by the smallest interval of the automatic read out.

Comparator Calibration

With the calibrated grid, the calibration of the comparator is performed by measuring the coordinates of each adjusted grid point directly. The grid intersections representing the points are determined in the same way as in the grid calibration phase, i.e., four auxiliary points around a specific intersection are used. The computer program provides for multiple settings on each point. Also, the grid can be rotated in 90° steps and the calibration repeated.

During the calibration, the comparator coordinates of a single reading must be recorded to the nearest tenth of a micron. A one-micron read-out in combination with multiple settings will provide sufficient precision.

The grid plates and the glass scales must be stored in the temperature-controlled comparator room.

III. ADJUSTMENTS

Adjustments must be made for the Grid and the Comparator Calibration.

Grid Calibration

First, the comparator coordinates of the grid line intersections and the corresponding scale line intersections are computed by intersecting the two lines represented by the four measured auxiliary points, using Cramer's rule for intersecting two straight lines.

The equations for two straight lines can be written as

$$\begin{aligned} a_1x + b_1y &= r_1 \\ a_2x + b_2y &= r_2 \end{aligned} \qquad (1)$$

Roberta A. Wooten, "A Forast Program For Sterecomparator Grid Calibration and Comparator Calibration" BRL Memorandum Report No. 1600, October 1964.

Solving the two equations for x and y, respectively, one obtains

$$x = \frac{\begin{vmatrix} r_1 b_1 \\ r_2 b_2 \end{vmatrix}}{\begin{vmatrix} a_1 b_1 \\ a_2 b_2 \end{vmatrix}} = \frac{b_2 r_1 - b_1 r_2}{a_1 b_2 - a_2 b_1}$$

$$y = \frac{\begin{vmatrix} a_1 r_1 \\ a_2 r_2 \end{vmatrix}}{\begin{vmatrix} a_1 a_1 \\ a_2 b_2 \end{vmatrix}} = \frac{a_1 r_2 - a_2 r}{a_1 b_2 - a_2 b} \qquad (2)$$

where:

$$a_1 = y_3 - y_1$$

$$b_1 = -(x_3 - x_1)$$

$$a_2 = y_4 - y_2$$

$$b_2 = -(x_4 - x_2)$$

$$r_1 = x_1 y_3 - x_3 y_1$$

$$r_2 = x_2 y_4 - x_4 y_2$$

Second, the distance between the computed intersections of the corresponding points are obtained from coordinate differences:

$$\ell = (\Delta x^2 + \Delta y^2)^{1/2} \qquad (3)$$

Each computed grid distance must now be corrected for the comparator error which can be assumed to be equal to the difference between the computed scale distance ℓ_S and the corresponding calibrated scale distance L_S. Therefore, the corrected grid distance becomes

$$L_G = \ell_G + L_S - \ell_S \qquad (4)$$

Introducing for numerical convenience an idealized, nominal grid, denoted by superscript 0, Equation (4) may be written

$$L_G = L_G^o + \Delta\ell \qquad (5)$$

and substituting Equation (4) into (5), one obtains

$$\Delta\ell = \ell_G - \ell_S + L_S - L_G^o \tag{6}$$

For all distances involved in the measuring procedure, the terms $(L_S - L_G^o)$ are computed and treated as constants as long as the same scales are used.

Any adjusted distance on the grid, $\bar{L}_G$, can be expressed as

$$\bar{L}_G = L_G + v = (\Delta X^2 + \Delta Y^2)^{1/2} \tag{7}$$

where ΔX and ΔY are the corresponding coordinate differences between the endpoints of the line under consideration. Introducing as approximation values the aforementioned nominal grid coordinates X^o, Y^o, we may write (Equation 7), applying the Taylor expansion and neglecting second and higher order terms:

$$\bar{L}_G = L_G + v = \frac{\Delta X^o}{L_G^o}\Delta x + \frac{\Delta Y^o}{L_G^o}\Delta y + L_G^o \tag{8}$$

where

$$L_G^o = (\Delta X^{o2} + \Delta Y^{o2})^{1/2}$$

Rearranging Equation (8) and with Equation (5) and (6), one obtains

$$v = \frac{\Delta X^o}{L_G^o}\Delta x + \frac{\Delta Y^o}{L_G^o}\Delta y + \Delta\ell \tag{9}$$

Thus, the observational equations for the distances in the X,Y and diagonal directions, respectively, are:

$$v_x = \frac{\Delta X}{L_G^o}\Delta x + \Delta\ell_x \tag{10a}$$

$$v_y = \frac{\Delta Y}{L_G^o}\Delta y + \Delta\ell_y \tag{10b}$$

$$v_{x,y} = \frac{\Delta X}{L_G^o}\Delta x + \frac{\Delta Y}{L_G^o}\Delta y + \Delta\ell_{x,y} \tag{10c}$$

The following numerical values are used for the nominal grid:

Square size (M)	ΔX (M)	ΔY (M)	ΔX^2	ΔY^2	L^2
.05 x .05	.05	.05	.0025	.0025	.005
.1 x .1	.1	.1	.01	.01	.02
.2 x .2	.2	.2	.04	.04	(*)

With the $\Delta\ell$'s known, observational equations are formed for the 158 distances:

Distance in	No. of Eqn.
X - direction	50
Y - direction	50
Diagonal directions	58

The coefficients of the normal equation system for the 50 unknowns (i.e., 25 Δx's and 25 Δy's) of the 25 selected grid points are found in the usual way from the coefficients of the 158 observational equations.

In addition, three geometrical constraints are introduced such that the variance-covariance matrix for the 50 unknowns expresses a symmetrically arranged error distribution field, relative to the central point of the grid, (actually relative to the gravity center of the adjusted coordinates). These constraints are:

$$c_1 : \Sigma\Delta x = 0 \tag{11a}$$

$$c_2 : \Sigma\Delta y = 0 \tag{11b}$$

$$c_3 : \Sigma\Delta x_1^5 - \Sigma\Delta x_{21}^{25} + \Sigma\Delta y_{5,10,15,20,25} - \Sigma\Delta y_{1,6,11,16,21} = 0 \tag{11c}$$

c_1 and c_2 control the translational components while c_3 relates to a rotational component.

These equations are added to the original normal equation system and its quadratic form is reestablished. Because these additional constraints have to be enforced rigorously, zero terms appear on the

Not used because of limited scale length.

corresponding diagonal elements of the matrix. In order to avoid numerical complications during the inversion of the normal equation system, the column equations of c_1 and c_2 have been exchanged with the columns associated with Δx_1 and Δy_1, respectively, and the column equation of c_3 with Δy_{25} correspondingly (Figure 5). It should be mentioned that the equation c_3 could be expanded to include more points. However, such an expansion affects only the determination of the κ angle in the comparator calibration phase. The κ angle represents the rotational component between the grid system and the comparator system and depends mainly on the alignment of the grid with the comparator axes, and is only of limited physical significance. With the inversion of the 53 x 53 normal equation system one obtains the Δx's and Δy's. The square roots of the corresponding diagonal terms of the inverted system are used to compute standard errors of the adjusted grid coordinates. The final grid coordinates are computed with

$$\left.\begin{aligned} X &= X^o + \Delta x \\ Y &= Y^o + \Delta y \end{aligned}\right\} \qquad (12)$$

where X^o, Y^o are the nominal grid coordinates.

To obtain the residual v for each distance and to compute the mean error of unit weight, the 158 distances are recomputed from the adjusted grid coordinates and the v's determined by

$$v = (\Delta X^2 + \Delta Y^2)^{1/2} - L_G \qquad (13)$$

with L_G as found in Equation (5).

The mean error of unit weight before adjustment is then

$$m = \left(\frac{\Sigma\ Pvv}{n-u}\right)^{1/2} \qquad (14)$$

A weight of P = 1 was used because the precision of the setting procedure was found to be uniform over the entire grid.

n = total number of measured distances

u = 2p - 3, where p is the number of points and "3" denotes the number of introduced geometrical contraints.

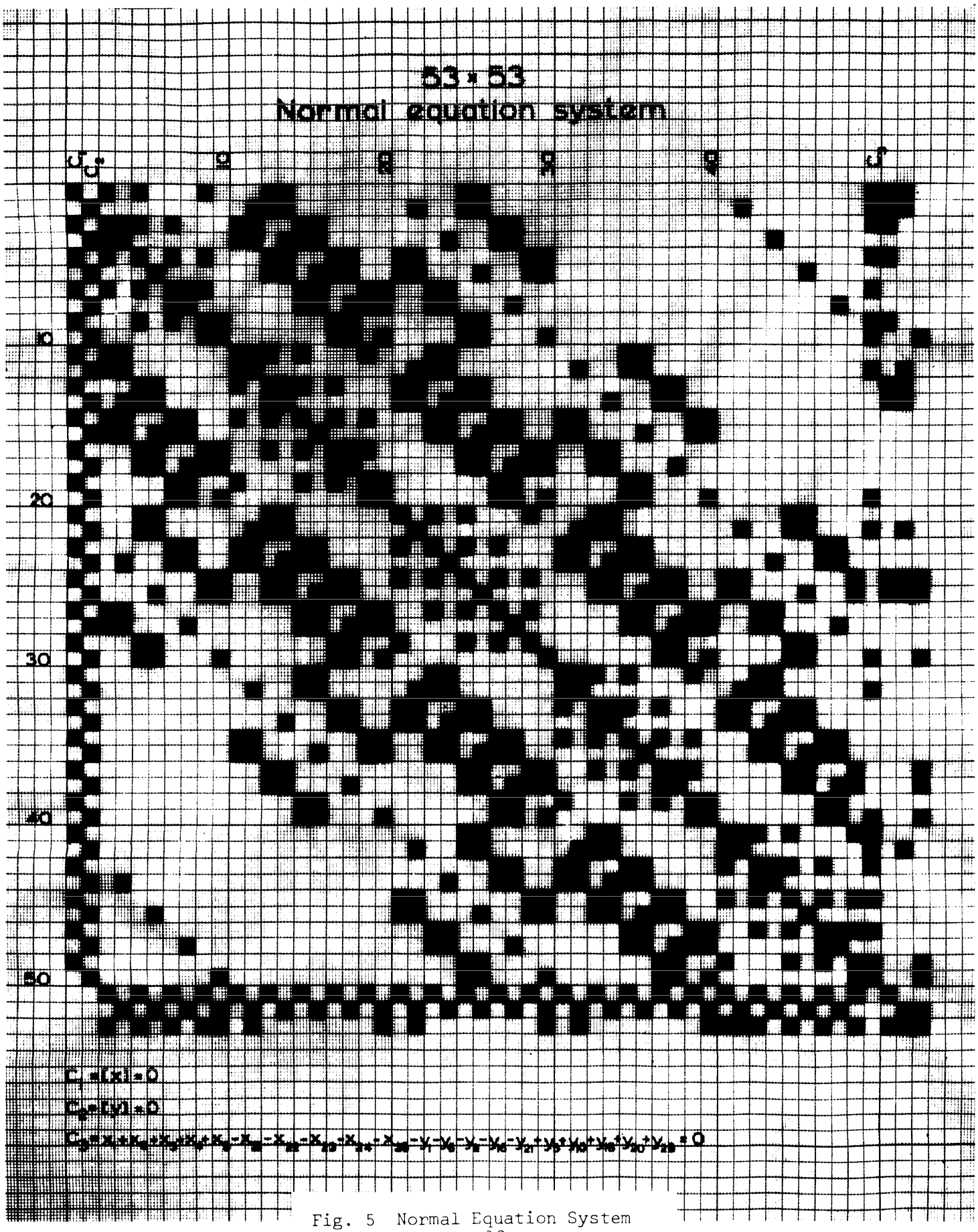

Fig. 5 Normal Equation System

The mean errors of the adjusted grid coordinates are

$$m_X = m \cdot \sqrt{Q_{xx}} \text{ and } m_Y = m \cdot \sqrt{Q_{yy}} \tag{15}$$

where the Q values are the diagonal terms of the inverted normal equation matrix.

Comparator Calibration

The comparator calibration serves to determine specific comparator constants which are:

1. Overall scale factors of the measuring screws
2. Non-orthogonality of the coordinate axes
3. Translation and rotation between grid and comparator coordinate systems

First, comparator coordinates of the 25 adjusted grid points are measured by the method described in section II, above. Then, these point coordinates are transformed into the adjusted grid coordinates. A least squares adjustment is used to obtain the comparator constants.

The transformation formula used reads as follows:

$$X = \left[(\ell_x - a)(1 + \Delta s_x) + (\ell_y - b)(1 + \Delta s_y)\,\alpha_r \right] \cos\kappa + \left[(\ell_y - b)(1 + \Delta s_y) \right] \sin\kappa \tag{16}$$

$$Y = \left[(\ell_x - a)(1 + \Delta s_x) + (\ell_y - b)(1 + \Delta s_y)\,\alpha_r \right] (-\sin\kappa) + \left[(\ell_y - b)(1 + \Delta s_y) \right] \cos\kappa \tag{16}$$

where

X, Y = calibrated grid coordinates

ℓ_x, ℓ_y = measured point coordinates

a, b = translations in x and y, respectively

Δs_x, Δs_y = increments of the scale factors of the x, y measuring screws

α_r = non-orthogonality between the coordinate axes (in radians)

κ = rotational angle between the grid and comparator coordinate systems.

The observational equations are obtained by linearizing Equation (16) with the Taylor series, neglecting again second and higher order terms.

Introducing approximation values, one obtains

$$X^o = \left[(\ell_x - a^o)(1 + \Delta s_x^o) + (\ell_y - b^o)(1 + \Delta s_y^o)\,\alpha_r^o \right] \cos \kappa^o + \left[(\ell_y - b^o)(1 + \Delta s_y^o) \right] \sin \kappa^o$$

$$Y^o = \left[(\ell_x - a^o)(1 + \Delta s_x^o) + (\ell_y - b^o)(1 + \Delta s_y^o)\,\alpha_r^o \right] (-\sin \kappa^o) + \left[(\ell_y - b^o)(1 + \Delta s_y^o) \right] \cos \kappa^o \qquad (17)$$

where

$$\Delta s_x = \Delta s_x^o + \Delta\Delta s_x \qquad a = a^o + \Delta a$$

$$\Delta s_y = \Delta s_y^o + \Delta\Delta s_y \qquad b = b^o + \Delta b$$

$$\alpha_r = \alpha_r^o + \Delta\alpha_r \qquad \kappa = \kappa^o + \Delta\kappa$$

The corresponding coefficients of the unknowns $\Delta\Delta s_x$, $\Delta\Delta s_y$. $\Delta\alpha_r$, Δa, Δb, and $\Delta\kappa$ are thus the partial derivatives of Equation (17) with respect to the unknowns. These coefficients are denoted in the manner listed on the following page.

$$
\begin{aligned}
\frac{\partial X}{\partial \Delta s_x} &= a_x = (\ell_x - a^o)\cos\kappa^o \\
\frac{\partial Y}{\partial \Delta s_x} &= a_y = -(\ell_x - a^o)\sin\kappa^o \\
\frac{\partial X}{\partial \Delta s_y} &= b_x = (\ell_y - b^o)\,(\alpha_r^o\cos\kappa^o + \sin\kappa^o) \\
\frac{\partial Y}{\partial \Delta s_y} &= b_y = (\ell_y - b^o)\,(\cos\kappa^o - \alpha_r^o\sin\kappa^o) \\
\frac{\partial X}{\partial \alpha} &= c_x = (\ell_y - b^o)\,(1 + \Delta s_y^o)\cos\kappa^o \\
\frac{\partial Y}{\partial \alpha} &= c_y = (\ell_y - b^o)\,(1 + \Delta s_y^o)\,(-\sin\kappa^o) \\
\frac{\partial X}{\partial a} &= d_x = -(1 + \Delta s_x^o)\cos\kappa^o \\
\frac{\partial Y}{\partial a} &= d_y = (1 + \Delta s_x^o)\sin\kappa^o \\
\frac{\partial X}{\partial b} &= e_x = -(1 + \Delta s_y^o)\,(\alpha_r^o\cos\kappa^o + \sin\kappa^o) \\
\frac{\partial Y}{\partial b} &= e_y = (1 + \Delta s_y^o)\,(\alpha_r^o\sin\kappa^o - \cos\kappa^o) \\
\frac{\partial X}{\partial \kappa} &= f_x = Y^o \\
\frac{\partial Y}{\partial \kappa} &= f_y = -X^o
\end{aligned}
\tag{18}
$$

Unless known from previous calibrations, all approximations may be set equal to zero. The absolute terms $\Delta\ell$ which during the iteration of the solution converge towards the residuals v, are computed with

$$
\begin{aligned}
X - X^o &= -\Delta\ell_x = v_x \\
Y - Y^o &= -\Delta\ell_y = v_y
\end{aligned}
\tag{19}
$$

where X, Y are again the adjusted grid coordinates as obtained from the grid calibration.

Assuming equal weights, the mean error of a single coordinate measurement before adjustment is

$$m = \left(\frac{\Sigma\ vv}{2n - u} \right)^{1/2} \tag{20}$$

with

n = number of points

u = number of unknown comparator constants.

The square roots of the diagonal terms of the inverted normal equation matrix are used to compute the standard errors of the unknowns.

IV. RESULTS

In Figure 6, a map displays the distribution pattern of the weight coefficients of the adjusted coordinates associated with the 25 grid points. The pattern is symmetric, concavely shaped, and the Y-pattern is rotated 90 degrees against the X-pattern, as can be expected from the geometric conditions introduced by the measuring procedure.

Figure 7, shows a plot of coordinate differences which were obtained by subtracting the nominal grid coordinates from the adjusted grid coordinates. The results of four grid calibrations were used. Some detailed information on the four calibrations is given below.

1. Each calibration was performed by a different operator, in fact, calibration number 1 was conducted by two operators, taking turns. Calibration number 4 was executed by the most experienced operator. The RMS error for this operator was 1.03 micron while in calibration number 1, the RMS error was almost twice as large. Calibration number 1 was also biased by an imperfection of the observing optics which was corrected later. Calibration number 2 and number 3 were performed by equally skilled operators.

2. Scanning the plot horizontally and vertically, a certain trend pattern emerges which seems to reflect a bias in the manufacturing process. The large differences at points number 21 and number 25 seem to indicate a deformation of the comparator base structure at extreme measuring positions. This is not reproducible.

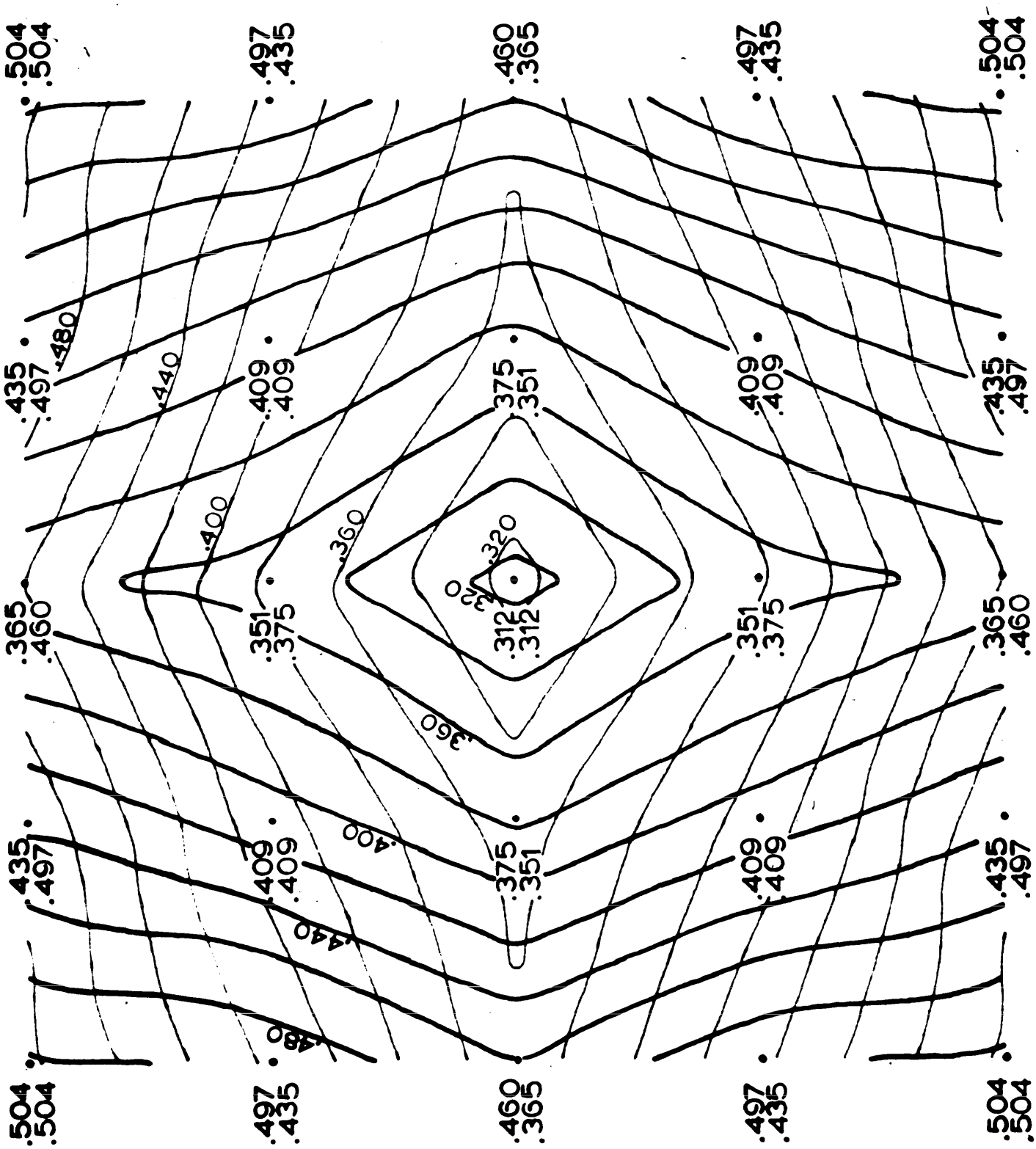

Fig. 6 Map of the Weight Coefficients Q_x and Q_y Given by Thin and Heavy Lines, respectively

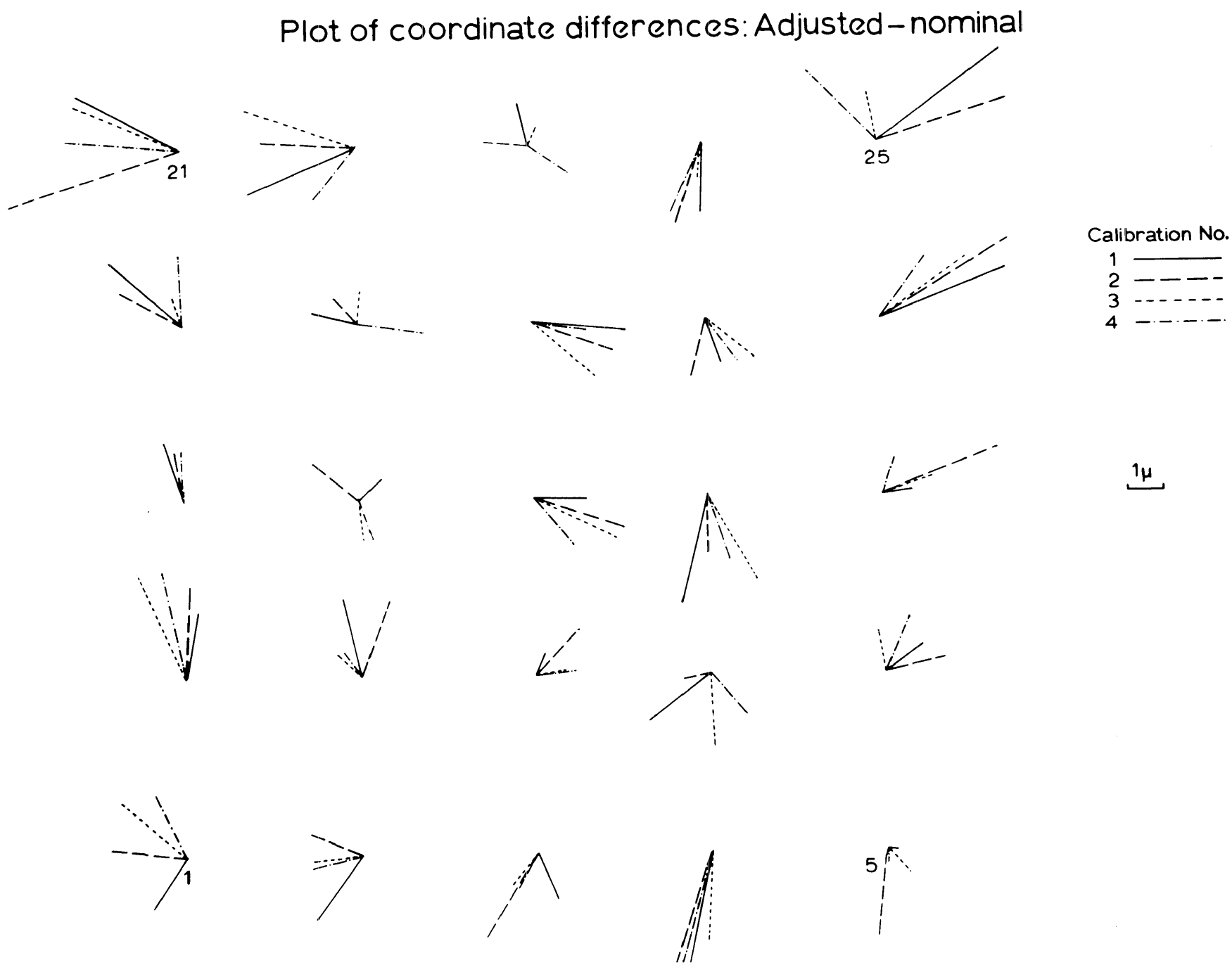

Fig. 7 Coordinate Differences Obtained from Four Grid Calibrations

3. Finally, a plot of the residuals v of five successive comparator calibrations is shown in Figure 8. The heavy dots spaced equidistantly represent the geometric location of the adjusted grid points averaged from four grid calibrations. The circles drawn about the average of the v's from five comparator calibrations have a radius of one micron. Except for points, 23, 24 and 25, the individual v's fall well within a $\pm$ 1 micron spread.

4. The five calibrations were made over a period of three days and conducted under varying illumination conditions for stage and dial lights. Temperature gauges were placed at vital parts such as measuring screws, counters, stage lights, and at the base and the top of the observing optics. Temperature gradients up to 3°C and a chimney effect at the observing optics, causing a 3° temperature difference, were observed. However, the effects of this difference appeared to be insignificant.

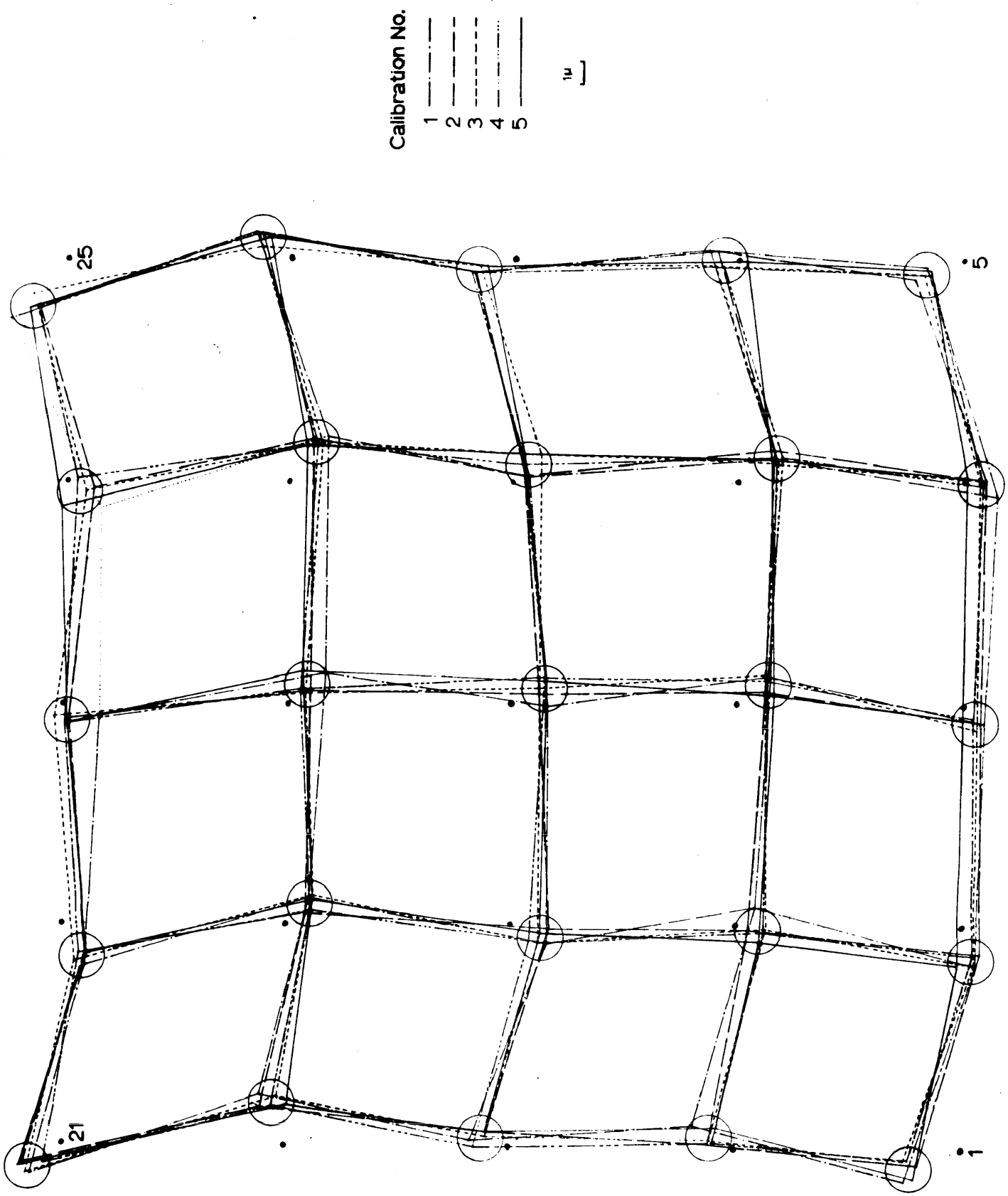

Fig. 8 Plot of the Residuals v from Five Successive Comparator Calibrations

DISTRIBUTION LIST

No. of Copies	Organization
20	Commander Defense Documentation Center ATTN: TIPCR Cameron Station Alexandria, Virginia 22314
4	Director of Defense Research & Engineering (OSD) ATTN: Asst Dir/Tac Msl & Ord Asst Dir/Comm & Elct Washington, D.C. 20301
1	Director Advanced Research Projects Agency ATTN: Plcy & Plng Div Department of Defense Washington, D.C. 20301
1	Chairman Defense Science Board Washington, D.C. 20301
1	Commanding General U.S. Army Materiel Command ATTN: AMCRD-TE Washington, D.C. 20315
1	Commanding General U.S. Army Materiel Command ATTN: AMCRD-M Washington, D.C. 20315
2	Commanding General U.S. Army Electronics Command ATTN: AMSEL-BL-D, Met Br AMSEL-RD, Tech Docu Ctr Fort Monmouth, New Jersey 07703
1	Commanding General U.S. Army Missile Command ATTN: AMSMI-AML Redstone Arsenal, Alabama 35809
1	Commanding General U.S. Army Missile Command ATTN: AMSMI-RBL Redstone Arsenal, Alabama 35809
1	Commanding Officer U.S. Army Engineer Research & Development Laboratories ATTN: STINFO Div Fort Belvoir, Virginia 22060
1	President U.S. Air Defense Board Fort Bliss, Texas 79916
1	Commanding General U.S. Army White Sands Missile Range White Sands Missile Range New Mexico 88002
5	Commanding Officer U.S. Army Map Service ATTN: COL Van Atta D/Carto Mr. A. Nowicki Mr. J. Webb Corps of Engineers 6500 Brooks Lane Washington, D.C. 20315
5	Commanding Officer U.S. Army Map Service ATTN: Photogrammetric Div D/ESPA, Mr. C. Born D/Geod, Mr. Rutscheidt Mr. S. Dossi Corps of Engineers 6500 Brooks Lane Washington, D.C. 20315

DISTRIBUTION LIST

No. of Copies	Organization
2	Commanding Officer U.S. Army Engineer Geodesy Intelligence & Mapping Research & Development Agency ATTN: COL Fish Mr. D. Howell Fort Belvoir, Virginia 22060
2	Commanding Officer U.S. Army Research Office (Durham) ATTN: CRD-AA-IPI Dr. T. W. Schmidt Box CM, Duke Station Durham, North Carolina 27706
3	Commander U.S. Naval Air Systems Command Headquarters ATTN: AIR-604 Washington, D.C. 23060
2	Commander U.S. Naval Missile Center Point Mugu, California 93041
1	Superintendent U.S. Naval Observatory ATTN: Dr. W. Markowitz 34th & Massachusetts Ave. N.W. Washington, D.C. 20390
1	Commander U.S. Naval Oceanographic Center Washington, D.C. 20390
2	Commander U.S. Naval Ordnance Laboratory Silver Spring, Maryland 20910
1	Commander U.S. Naval Ordnance Test Station China Lake, California 93557
1	Superintendent U.S. Naval Postgraduate School ATTN: Tech Rept Sec Monterey, California 93940
1	Commander U.S. Naval Reconnaisance & Technical Support Center Washington, D.C. 20390
2	Director U.S. Naval Research Laboratory Washington, D.C. 20390
2	Commander U.S. Naval Weapons Laboratory ATTN: KXK, Dr. W. Kemper K-1, Dr. C. Cohen Dahlgren, Virginia 22448
1	HQ, USAF (AFCCS-SA) Washington, D.C. 20330
1	AFSC (SCT) Andrews AFB Washington, D.C. 20331
1	Det 1 ACIC 1212 S. Fern Street Arlington, Virginia 22202
1	AFFTC (FTOOT) Edwards AFB California 93523
1	APGC (PGVEL) Eglin AFB Florida 32542
1	AAVS Orlando AFB, Florida 32813

DISTRIBUTION LIST

No. of Copies	Organization
1	APGC (PGTRI) Eglin AFB Florida 32542
1	RADC Griffiss AFB New York 13440
2	AFCRL (CRZH) L. G. Hanscom Fld Bedford, Massachusetts 01731
3	AFMDC (MDS;MDT;MDL) Holloman AFB New Mexico 88330
1	AUL (3T-AUL-60-118) Maxwell AFB Alabama 36112
1	ACIC (ACDEC, Mr. Roth) 2d & Arsenal St. Louis, Missouri 63118
1	AFAL (AVRP) Wright-Patterson AFB Ohio 45433
1	ARL (ARD) Wright-Patterson AFB Ohio 45433
2	Director P.O. Box 1925 ATTN: James Casey Washington, D.C. 20505
1	Director U.S. Geological Survey ATTN: Mr. Radlinski 14th and F Streets, N.W. Washington, D.C. 20240

No. of Copies	Organization
1	Director Bureau of Land Management ATTN: Div of Engr, Ch for Br of Compt 555 Cordova Street U.S. Department of the Interior Anchorage, Alaska 99501
7	Director Environmental Science Services Administration ATTN: Code 14, Mr. W. Harris Mr. Schmid (4 cys) Mr. E. Schmid CPT Swanson U.S. Department of Commerce Rockville, Maryland 20852
4	Director Environmental Science Services Administration ATTN: Code 1.1, Mr. Simmons Code 13, CDR Taylor Code 14, Mr. Tewinkel Mr. Whitten U.S. Department of Commerce Rockville, Maryland 20852
1	Director Brookhaven National Laboratory ATTN: Mr. O. Reading 25 Brookhaven Avenue Upton, New York 11973
5	Director National Aeronautics and Space Administration Goddard Space Flight Center ATTN: Code 250 Code 620, Mr. Nordberg Code 630, Dr. Jastrow Code 640, Dr. O'Keefe (2 cys) Greenbelt, Maryland 20771

DISTRIBUTION LIST

No. of Copies	Organization
1	Director Jet Propulsion Laboratory ATTN: Dr. W. Pickering 4800 Oak Grove Drive Pasadena, California 91103
1	Director National Aeronautics & Space Administration Manned Spacecraft Center ATTN: Code EE4, Mr. Dickerson Houston, Texas 77058
1	Director National Aeronautics & Space Administration George C. Marshall Space Flight Center Huntsville, Alabama 35812
1	Director National Aeronautics & Space Administration ATTN: Mr. Robert Long Wallops Station Wallops Island, Virginia 23337
1	Director National Science Foundation ATTN: Tech Lib 1800 G Street, N.W. Washington, D.C. 20550
2	Director Smithsonian Institute Washington, D.C. 20560
1	Director Smithsonian Astrophysical Observatory ATTN: Dr. Whipple Dr. Kozai 60 Garden Street Cambridge, Massachusetts 02138
1	President National Academy of Sciences National Research Council ATTN: Dr. P. Hart 2101 Constitution Avenue, N.W. Washington, D.C. 20418
1	Sandia Corporation ATTN: Info Distr Div P.O. Box 5800 Albuquerque, New Mexico 87115
1	Technical Operations, Inc. ATTN: Mr. S. Holland South Avenue Burlington, Massachusetts 01801
1	Director Physical Research Laboratory Boston University Boston, Massachusetts 02215
3	Franklin Institute ATTN: Mr. C. Moench Mr. C. Belsterling Mr. A. Marmarov Benjamin Franklin Parkway at 20th Street Philadelphia, Pennsylvania 19103
1	Massachusetts Institute of Technology Department of Civil and Sanitary Engineering ATTN: Photogrammetry Lab Mr. C. Miller 77 Massachusetts Avenue Cambridge, Massachusetts 02139
1	Princeton University Department of Civil Engineering Princeton, New Jersey 08540

DISTRIBUTION LIST

No. of Copies	Organization
1	Syracuse University Department of Civil Engineering ATTN: Photogrammetric Dept Syracuse, New York 13201
1	University of Maryland Department of Civil Engineering College Park, Maryland 20740
1	Director Yale University Observatory New Haven, Connecticut 06511
1	Professor P. Brennan Department of Civil Engineering Syracuse University Syracuse, New York 13201
1	Professor A. Faulds Department of Civil Engineering Syracuse University Syracuse, New York 13201
1	Professor A. McNair School of Civil Engineering Cornell University Ithaca, New York 14850
1	Professor M. Schmid Department of Civil Engineering University of Illinois Urbana, Illinois 61803
3	Professor U. Uotila Department of Geodetic Science The Ohio State University 164 West Nineteenth Avenue Columbus, Ohio 43210
1	Dr. R. H. Dicke Palmer Physical Laboratory Princeton University Princeton, New Jersey 08540

No. of Copies	Organization
1	Dr. G. Gardiner School of Agriculture & Mechanic Arts New Mexico State University State College, New Mexico 88070
1	Dr. W. Guier Applied Physics Laboratory The Johns Hopkins University 8621 Georgia Avenue Silver Spring, Maryland 20910
1	Dr. P. Herget Cincinnati Observatory Cincinnati, Ohio 45200
1	Dr. H. Karara Department of Civil Engineering University of Illinois Urbana, Illinois 61803
1	Dr. G. MacDonald Institute of Geophysics and Planetary Physics University of California at Los Angeles 405 Hilgard Avenue Los Angeles, California 90024
1	Mr. V. Van Pragg 3861 Mount Vernon Drive Los Angeles, California 90008
1	Mr. M. Wright Ashlawn 1129 4921 Seminary Road Alexandria, Virginia 22311

Aberdeen Proving Ground

Ch, Tech Lib
Air Force Ln Ofc
Marine Corps Ln Ofc
Navy Ln Ofc
CDC Ln Ofc

Unclassified

Security Classification

DOCUMENT CONTROL DATA - R&D

(Security classification of title, body of abstract and indexing annotation must be entered when the overall report is classified)

1. ORIGINATING ACTIVITY *(Corporate author)* U.S. Army Ballistic Research Laboratories Aberdeen Proving Ground, Maryland	2a. REPORT SECURITY CLASSIFICATION Unclassified 2b. GROUP

3. REPORT TITLE

A COMPARATOR CALIBRATION METHOD

4. DESCRIPTIVE NOTES *(Type of report and inclusive dates)*

5. AUTHOR(S) *(Last name, first name, initial)*

Poetzschke, Heinz G.

6. REPORT DATE January 1967	7a. TOTAL NO. OF PAGES 33	7b. NO. OF REFS

8a. CONTRACT OR GRANT NO. b. PROJECT NO. RDT&E 1P523801A286 c. d.	9a. ORIGINATOR'S REPORT NUMBER(S) Report No. 1353 9b. OTHER REPORT NO(S) *(Any other numbers that may be assigned this report)*

10. AVAILABILITY/LIMITATION NOTICES

Distribution of this document is unlimited.

11. SUPPLEMENTARY NOTES	12. SPONSORING MILITARY ACTIVITY U.S. Army Materiel Command Washington, D.C.

13. ABSTRACT

A method is described for calibrating precision comparators by using grid plates which have been calibrated by means of a triangulation method based exclusively on distance measurements. The method used for calibrating the grid plate provides measurements of the x, y coordinates for selected grid intersections to an accuracy better than $\pm$ 1 μ.

Using calibrated grid plates, the comparator may be calibrated to determine instrument constants such as:

1. Overall scalers of the measuring screws.
2. Non-orthogonality between the x and y movements.
3. Translation and rotation between grid and comparator coordinate systems.

The results of a number of calibrations are shown.

DD FORM 1 JAN 64 1473

Unclassified

Security Classification

Unclassified
Security Classification

14. KEY WORDS	LINK A ROLE	LINK A WT	LINK B ROLE	LINK B WT	LINK C ROLE	LINK C WT
Calibration						
Comparator						
Zero Method						
Trilateration						

INSTRUCTIONS

1. ORIGINATING ACTIVITY: Enter the name and address of the contractor, subcontractor, grantee, Department of Defense activity or other organization *(corporate author)* issuing the report.

2*a*. REPORT SECURITY CLASSIFICATION: Enter the overall security classification of the report. Indicate whether "Restricted Data" is included. Marking is to be in accordance with appropriate security regulations.

2*b*. GROUP: Automatic downgrading is specified in DoD Directive 5200.10 and Armed Forces Industrial Manual. Enter the group number. Also, when applicable, show that optional markings have been used for Group 3 and Group 4 as authorized.

3. REPORT TITLE: Enter the complete report title in all capital letters. Titles in all cases should be unclassified. If a meaningful title cannot be selected without classification, show title classification in all capitals in parenthesis immediately following the title.

4. DESCRIPTIVE NOTES: If appropriate, enter the type of report, e.g., interim, progress, summary, annual, or final. Give the inclusive dates when a specific reporting period is covered.

5. AUTHOR(S): Enter the name(s) of author(s) as shown on or in the report. Enter last name, first name, middle initial. If military, show rank and branch of service. The name of the principal author is an absolute minimum requirement.

6. REPORT DATE: Enter the date of the report as day, month, year; or month, year. If more than one date appears on the report, use date of publication.

7*a*. TOTAL NUMBER OF PAGES: The total page count should follow normal pagination procedures, i.e., enter the number of pages containing information.

7*b*. NUMBER OF REFERENCES: Enter the total number of references cited in the report.

8*a*. CONTRACT OR GRANT NUMBER: If appropriate, enter the applicable number of the contract or grant under which the report was written.

8*b*, 8*c*, & 8*d*. PROJECT NUMBER: Enter the appropriate military department identification, such as project number, subproject number, system numbers, task number, etc.

9*a*. ORIGINATOR'S REPORT NUMBER(S): Enter the official report number by which the document will be identified and controlled by the originating activity. This number must be unique to this report.

9*b*. OTHER REPORT NUMBER(S): If the report has been assigned any other report numbers *(either by the originator or by the sponsor)*, also enter this number(s).

10. AVAILABILITY/LIMITATION NOTICES: Enter any limitations on further dissemination of the report, other than those imposed by security classification, using standard statements such as:

(1) "Qualified requesters may obtain copies of this report from DDC."

(2) "Foreign announcement and dissemination of this report by DDC is not authorized."

(3) "U. S. Government agencies may obtain copies of this report directly from DDC. Other qualified DDC users shall request through _____."

(4) "U. S. military agencies may obtain copies of this report directly from DDC. Other qualified users shall request through _____."

(5) "All distribution of this report is controlled. Qualified DDC users shall request through _____."

If the report has been furnished to the Office of Technical Services, Department of Commerce, for sale to the public, indicate this fact and enter the price, if known.

11. SUPPLEMENTARY NOTES: Use for additional explanatory notes.

12. SPONSORING MILITARY ACTIVITY: Enter the name of the departmental project office or laboratory sponsoring *(paying for)* the research and development. Include address.

13. ABSTRACT: Enter an abstract giving a brief and factual summary of the document indicative of the report, even though it may also appear elsewhere in the body of the technical report. If additional space is required, a continuation sheet shall be attached.

It is highly desirable that the abstract of classified reports be unclassified. Each paragraph of the abstract shall end with an indication of the military security classification of the information in the paragraph, represented as *(TS)*, *(S)*, *(C)*, or *(U)*.

There is no limitation on the length of the abstract. However, the suggested length is from 150 to 225 words.

14. KEY WORDS: Key words are technically meaningful terms or short phrases that characterize a report and may be used as index entries for cataloging the report. Key words must be selected so that no security classification is required. Idenfiers, such as equipment model designation, trade name, military project code name, geographic location, may be used as key words but will be followed by an indication of technical context. The assignment of links, rules, and weights is optional.

Unclassified
Security Classification