AD0649536
01

Flight Dynamics Laboratory

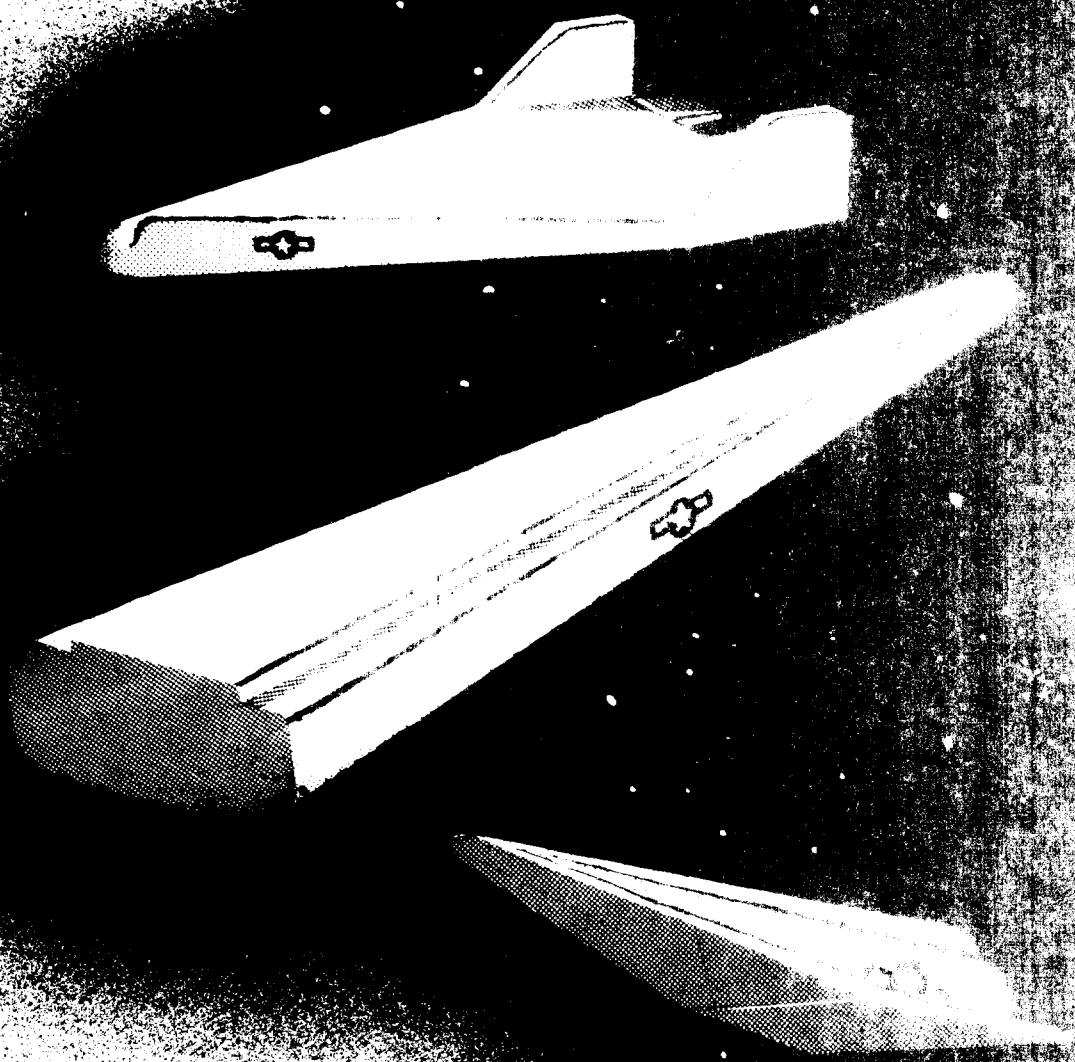

AN INVESTIGATION OF THE COMFORT PROPERTIES OF THE NET SEAT CONCEPT

R. L. PETERSON

ASRMDD-

CREW STATION SECTION

TECHNICAL MEMORANDUM NO. ASRMDD-TM 62-50

ASRMDD-TM-62-50

AN INVESTIGATION OF THE COMFORT PROPERTIES OF THE NET SEAT CONCEPT

Richard L. Peterson

Flight Dynamics Laboratory

August 1962

Project No. 1425, Task No. 142502

Aeronautical Systems Division
Air Force Systems Command
United States Air Force
Wright-Patterson Air Force Base, Ohio

20061012130

AF-WP-B-SEP 62 60

FOREWORD

The research work in this memorandum report was performed in-house by the Cybernetics Unit, Crew Station Section, Dynamics Branch, Flight Dynamics Laboratory, Directorate of Aeromechanics, Deputy For Technology, Aeronautical Systems Division, Wright-Patterson AFB, Ohio. This research is part of a continuing effort to obtain design criteria for crew and passenger seating and restraint systems for flight vehicles which is part of the Air Force Systems Command's Applied Research Program, 750A, the Mechanics of Flight. The Project Nr. is 1425, "Crew Station Research For Aerospace Vehicles" and the Task Nr. is 142502, "Crew Support and Locomotion Techniques and Devices." Lt William Elkins, W/C John I. R. Bowring and Mr. Richard L. Peterson of the Cybernetics Unit, Flight Dynamics Laboratory assumed, in turn, the responsibility for this investigation. The in-house research program was initiated in 1958 and was completed in 1959.

Acknowledgements are made to Capt John K. Jackson, USAF and Dr. Mildred B. Mitchell formerly with the Stress and Fatigue Section, 6570th Aerospace Medical Research Laboratories for their evaluation of the comfort capability of the prototype net seat as described in Appendix II of this memorandum report. Grateful acknowledgement is also extended to M/Sgt Sherwin F. Johnson of the Cybernetics Unit, Crew Station Section, Dynamics Branch, Flight Dynamics Laboratory for his able assistance in monitoring fabrication of the prototype net seat and in the collection of data during the test phase of this investigation.

ABSTRACT

This memorandum report presents the results of an in-house net seat comfort study program to evaluate the comfort properties of the net seat concept for possible integration in future aerospace vehicles. A description of the experimental net seat delineator, with illustrations, is included. The three angular positions of special interest in vertically launched long duration space missions are defined. Two Appendices are included, the first discussion the area of discomfort and the second covering the results of a comfort study conducted by the 6570th Aerospace Medical Research Laboratories where the prototype tubular stainless steel net seat was utilized. The results indicate that this seating concept provides a high degree of comfort for both short and long duration (up to 36 continuous hours) occupancy and that further evaluation of this concept's capability during periods of relatively high sustained accelerations and low frequency vibrations should be investigated.

COORDINATION:

C. V. Mayrand

CHARLES V. MAYRAND, ASRMDD-1

PREPARED BY:

Richard L. Peterson

RICHARD L. PETERSON, ASRMDD-11

PUBLICATION REVIEW

This report has been reviewed and is approved.

Ambrose B. Nutt

AMBROSE B. NUTT
Ass't Chief, Dynamics Branch
Flight Dynamics Laboratory

TABLE OF CONTENTS

SECTION			PAGE
I	Introduction		1
II	General Discussion		1
III	Initial Net Seat Delineator Comfort Experiments		2
IV	Net Seat Comfort Experiments in the Launch Position and Definition of Rest Position		4
V	Combination Net Seat and Pressure Suit Comfort Experiments		4
VI	Conclusions and Recommendations		5
VII	Bibliography		6
VIII	Appendix I	Discomfort by John I. R. Bowring W/C USAF/RAF	7
IX	Appendix II	Net Seat Comfort Studies by John K. Jackson, Capt USAF (MSC)	10

LIST OF ILLUSTRATIONS

FIGURE

1. Net Seal Delineator

2. Net Seat Work Position Angles

3. Prototype Net Seat Stainless Steel Tubular Structure Showing Back Contour

4. Net Seat Launch Position Angles

5. Net Seat Rest Position Angles

6. Net Seat With Subject Wearing Full Pressure Suit In The ASD High Altitude Pressure Chamber

7. Pressure Distribution of Buttocks On A Flat Plate

8. Pressure Distribution Of Buttocks On A Contoured Surface

9. Pressure Distribution Of Buttocks On A Spring Support Cushion

10. Pressure Distribution Of Buttocks On A Suspended Raschel Knit Cloth

I. INTRODUCTION

In early 1958, a research program was initiated to investigate new and unique crew seating concepts for aerospace vehicle applications. Mr. H. T. E. Hertzberg of the 6570th Aerospace Medical Research Laboratories had previously experimented with the use of a coarse fish-net fabric and found that when rigged into a seat configuration, was most comfortable. Based on this previous exploratory research, it was decided to expand development of this seating concept. (This concept was eventually titled "The Net Seat Concept"). The comfort capability of this seating technique was established as the first goal in the investigation and evaluation of the net seat concept. As the investigation successfully progressed, additional requirements were integrated into the basic design and additional experiments were planned in the sustained acceleration and low frequency vibration area, where human subjects as well as articulated anthropomorphic dummies would be used. These additional experiments are considered necessary to thoroughly evaluate a specific net seat configuration for application to future vertically launched space vehicles capable of long duration missions, and the results will be documented in subsequent reports.

II. GENERAL DISCUSSION

The purpose of the net seat comfort evaluation program can be summarized as follows:

1. Investigate basic comfort criteria
2. Determine the optimum contour
3. Determine the degree of comfort of the net seat concept
4. Determine the optimum seating angles (seat back-rest to seat pan and seat pan to seat leg-rest)
5. Determine the most suitable seating material

To achieve this goal, the following procedure was established. A laboratory device, the net seat delineator was conceived and fabricated. (Reference Figure 1). This delineator consisted of a wooden frame configured as a seat.

Threaded rods with lock nuts were installed around the periphery of the wood seat frame. This arrangement permitted the threaded rods to be adjusted up or down relative to the wooden frame. The various materials to be evaluated were attached to the rods by means of nylon cord. By adjusting the length of the rods and tension of the nylon cords, an infinite number of contour and tension adjustments were possible. The delineator was designed to be pivoted at the hip location. A pin joint, incorporating a locking device enabled the angles between the (a) seat back rest and seat pan, and (b) seat pan and seat leg rest to be readily adjusted. This delineator provided a device for the initial comfort experiments. Initially, the delineator was adjusted to many different angles for evaluation. Finally the research engineers selected an angular configuration as shown in Figure 2. This position has since been defined as the work position for the net seat concept. The next step was to select a fabric material for testing. Various types of fabrics, such as cotton, silk, nylon, dacron etc., were evaluated for suitability as a seating surface. Nylon and dacron Raschel Knit Cloth appeared to be the most satisfactory. Raschel Knit Cloth, both nylon and dacron, is durable, strong and readily available on the commercial market.* The pattern of the Raschel Knit Cloth is made in a soft, medium or hard hand** and is dependent on the amount of heat applied. This heating process is an integral part of the manufacturing cycle and affects the stiffness of the Raschel Knit Cloth. This heating process does not affect the mechanical properties of the Raschel Knit Cloth, but does alter the tactibility or feel of the cloth. Nylon and dacron Raschel Knit Cloth finished in a "medium hand" was selected for the net seat comfort evaluation tests. Several of the mechanical properties of Raschel Knit Cloth are as follows:

Type of Raschel Knit Cloth	Percent Elongation At Ultimate	Ultimate Load (2" Test Patch)
Nylon	118	365 lbs
Dacron	87	315 lbs

III. INITIAL NET SEAT DELINEATOR COMFORT EXPERIMENTS

A panel of volunteer test subjects, consisting of rated officers, non-rated officers, civilian engineers and other employees with varied backgrounds participated in the net seat comfort evaluation program with each subject clothed in a standard Air Force flying suit, wearing normal underclothes. During the

* One of the commercial sources for this fabric material is:
Native Laces & Textiles, Inc.
261 Fifth Avenue
New York 16, N. Y.

** A term used in the textile industry which denotes a varying degree of stiffness.

evaluation, room temperature was maintained at 74° ± 3°F. Before the evaluation period started, the subjects were advised that they could read, write, or just relax during the evaluation. Before each test, however, the delineator was adjusted to each individual to insure maximum contact between the body and the Raschel Knit Cloth under test. After the contour was established, the Raschel Knit Cloth seating surfaces were adjusted in "medium tension". Medium tension is achieved when the reading on a spring scale indicates 20 ± 5 pounds while the Raschel Knit Cloth cover is deflected 1.5 inches over a 2-inch square area, perpendicular to and in the center of the back rest, seat pan and leg rest. During the evaluation, at 30 minute intervals, each subject was asked such questions as:

1. Are you comfortable?

2. Do you notice any discomfort?

3. Can you detect any pressure points?

4. Any comments?

Depending on the answers, the contour and tension of the Raschel Knit Cloth were continually altered in an effort to obtain the most comfortable configuration for each subject. This procedure was continued until the delineator did not require further contour or tension adjustments. A total of 234 subjects established the optimum Raschel Knit Cloth contour and tension configuration. An additional 30 subjects were seated in this optimum configuration for periods ranging from 6 to 36 hours, (ten subjects at 24 hours each and two subjects at 36 hours) with the result that none of the 30 subjects reported any localized pressure points causing discomfort.* A period of four months was required to complete these initial comfort tests. The final configuration (established by the initial group of 234 subjects) appeared to be universally comfortable. The contour which resulted from these experiments is as shown in Figure 3. Nylon Raschel Knit Cloth material finished in a "medium hand" was ultimately stretched across the seat frame in "medium tension".

It was concluded at the end of this evaluation program that:

1. An optimum contour had been achieved for the net seat concept

2. Nylon Raschel Knit Cloth material is an excellent seating surface

3. A "work" position for the net seat concept was defined (Reference Figure 1)

4. A high degree of seating comfort had been achieved for long durations using the net seat concept

* Discomfort is discussed in Appendix I at the end of this report.

IV. NET SEAT COMFORT EXPERIMENTS IN THE LAUNCH POSITION AND DEFINITION OF REST POSITION

Additional comfort experiments were conducted utilizing the stainless steel tubular net seat under the supervision of personnel of the Flight Dynamics Laboratory. These experiments were conducted with the net seat in the newly established launch position. The launch position is defined as shown in Figure 4. The purpose of these experiments were to assess overall comfort and to determine the effect of reduced circulation of the blood in the legs. (Would the legs go to sleep or become numb?) This experiment was conducted with the subjects positioned on their backs in the vertical semi-supine launch position. A total of eight subjects sat in the launch position for a period of from 10 to 15 minutes each. In addition one of the eight subjects occupied the net seat for a total duration of (2) hours. No adverse effects or areas of discomfort were noted during these experiments. In addition to the launch and work positions defined for the net seat concept, a rest position has also been established. The rest position is defined as shown in Figure 5. It is planned that this position be used by the crew members for relaxation purposes such as viewing prerecorded television type programs and for sleeping.

V. COMBINATION NET SEAT AND PRESSURE SUIT COMFORT EXPERIMENTS

Upon completion of the first stainless steel tubular configured net seat, as shown in Figure 3, further comfort experiments were conducted in the ASD high altitude pressure chamber under the supervision of qualified medical personnel of the 6570th Aerospace Medical Research Laboratories. The primary objectives of these experiments were (1) to evaluate three different pressure suit configurations for selection of a pressure suit for Project Mercury and (2) to further assess the comfort properties of the net seat concept. The net seat was mounted in the launch position for these experiments. The head rest assembly of the net seat was removed and replaced with 5 layers of 1/2" thick foam rubber. This was necessary to permit sufficient space for the helmet of the full pressure suit system bearing in mind that the prototype net seat head rest was designed for a "shirt sleeve" environment. Figure 6 shows a subject wearing a full pressure suit and being supported on the prototype net seat in the ASD high altitude pressure chamber.

During these experiments the subjects were required to wear full pressure suits, unpressurized at the 27,000 foot altitude and pressurized at the 100,000 foot test altitude. A total of nine subjects occupied the net seat for a period of 24 hours each at the 27,000 foot test altitude. At the 100,000 foot test altitude, the same 9 subjects with pressure suits fully pressurized, occupied the net seat for a period of four hours each. None of the 9 subjects vacated the net seat at any time during the above-described tests. During the observation periods, one of the items to be checked by the test monitor was to determine whether any pressure points, causing discomfort, existed either in the pressure suit or in the support (net seat) system. Only one of the subjects noted discomfort which resulted from a dislocated eyelet located on the net seat pan. This caused some local inflammation on the skin of the buttocks and was eliminated when the eyelet was taped over and repositioned. No other adverse comments were recorded on either the three pressure suit configurations or the prototype net seat. One encouraging comment received went as follows: "The net seat was the most comfortable support I ever sat in".

VI. CONCLUSIONS AND RECOMMENDATIONS

The prototype net seat support system has been extensively tested in the comfort area and provides the seated operator with a high degree of comfort. A Universal seat contour, and optimum seating angles have been established for seat designs incorporating the net seat concept. Additional research should be conducted using this seating technique to determine the capability of the net seat concept during periods of sustained accelerations and low frequency vibrations utilizing human test subjects.

BIBLIOGRAPHY

1. Bowring, John I. R., Wing Commander RAF, and Kritzar, John W. Captain USAF Crew Station of the Future, a technical paper given at the meeting of the Institute of Environmental Sciences, April 1960, in Los Angeles, California

2. Peterson, Richard L., Current Research in Air Force Personnel Seating, a technical paper given at ASD in September 1961 to the Automotive Seating Subcommittee of the Society of Automotive Engineers

3. Wood, Paul W., Jr. "Investigation Of A Net Crew Seat Concept For Advanced Flight Vehicles, Part I. Investigation and Design" ASD TDR 61-546, dated June 1962.

APPENDIX I

DISCOMFORT

by

John I. R. Bowring W/C USAF/RAF

Probably the most important consideration in seat design is that of eliminating occupant discomfort. It is well known that when one remains seated for long periods of time, such as during lengthy conferences, long aircraft flights, automobile trips, etc. discomfort and fatigue result. Often the seat with the most luxurious appearance is in fact uncomfortable due to improper contouring and support in the critical body regions. The areas of the body which are usually associated with the problems of discomfort are:

(1) Behind the knees

(2) Buttocks

(3) Lumbar

(4) Shoulders

(5) Neck

The following discussion considers these areas separately and analyses the causes of discomfort and potential solutions thereto:

Behind the Knee

When one is seated, pressure exerted between the edge of the seat and the leg beneath the knee can cause a restriction of the blood supply. This results in a numbness of the lower legs. Proper contouring of the seat beneath the knee and maximum seat surface-body contact will prevent pressure points and constriction, thereby removing this cause of discomfort.

Buttocks

The weight of the upper torso is distributed to the seat through the buttocks when one is seated. The weight distribution on the buttocks can be described as $L = \frac{W}{2}$ where L = buttocks loading and W = upper torso weight. For a heavy

man W is equal to as much as 180 pounds. However, due to the proportional increase in body surface area with an increase in body weight, the weight per unit area of contact remains constant, because of correspondingly larger buttocks. This results in an increase in buttocks contact area, thus the weight per unit contact remains constant. Pressure caused by sitting starves blood from certain buttocks tissue cells resulting in pain. The pressure distribution for a typical buttocks seated on a flat wooden plank is shown in Figure 7. The small area of contact creates a relatively high loading on each buttock. After a short time in this position, the buildup of pressure, causing blood starvation, will cause discomfort. The individual will try to alleviate the situation by crossing his legs, thus restoring the normal blood supply to the tissue cells of the buttock which is now unloaded, but thereby increasing the pressure and further restricting the blood supply to the other buttock. Thus a chain reaction follows, and the individual will continually cross and re-cross his legs to alleviate the discomfort condition. The effects of this discomfort may be delayed, and the cause partly removed by shaping the plank to the contour of the buttocks, thus increasing the area of contact between the buttocks and the seat. This fact was recognized centuries ago in England, when the contoured "Windsor" chair was first used in England. Figure 8 illustrates the contour of the seat of such a chair. In this configuration, however, the effects of discomfort are only temporarily delayed. An improvement can be effected by the introduction of a cushion, either foam rubber, or spring filled, shaped to the buttocks contour. This results in greater comfort which is caused by the increase in buttocks contact area. In time, however, the effects of discomfort return, caused by uneven pressure due to irregular compressive loads on either the springs or foam rubber, thus again restricting the blood supply. Reference Figure 9.

Lumbar

The lumbar area of the back is well known for its tendency to produce backache. This is caused by pressure on the invertebrate discs, causing displacement of the discs which press on the nerves of the lumbar-sacral plexus resulting in a feeling of discomfort and backache. This discomfort is well known by aviators, and persons who sit for long periods in conferences and automobiles.

Neck

The final, but less critical areas of discomfort, are the neck and shoulders. After prolonged periods of sitting, aches and pains are common in both of these areas. It is known that proper support in both the lumbar and neck regions will delay in many cases the discomforts felt as a result of prolonged sitting.

The objective then is to provide a flexible seating surface, sufficiently strong, which conforms to the body contour providing maximum contact to the body seating area. A suitable material, such as nylon and dacron Raschel Knit Cloth was found to meet this requirement. It was determined by laboratory experiments that

nylon and dacron Raschel Knit Cloth, suspended and uniformly tensioned on a properly contoured seat frame, would provide a much greater body to seat surface contact area thereby reducing buttocks pressure per unit area and increase the level of comfort. Figure 10 shows uniform pressure distribution of the buttocks area on flexible Raschel Knit Cloth.

APPENDIX II

NET SEAT COMFORT STUDIES

by

John K. Jackson, Capt USAF (MSC)

Net seat comfort studies were conducted under the supervision of John K. Jackson, Capt, USAF (MSC) of the Psychophysiological Stress Section of the Aerospace Medical Laboratory, ASD, Wright-Patterson AFB, Ohio. The draft of Capt Jackson's unpublished report is quoted as follows:

"Net Seat Support - Restraint System"

PURPOSE: The Psychophysiological Stress Section conducted a series of six, twenty-four hour controlled comfort studies to evaluate the Net Seat Support-Restraint System. This report will present the subjects' reactions to the comfort and habitability of this system during a continuous twenty-four hour seat confinement period. The seat evaluations also served as a media for assessing subject alertness during this test period through a prescribed monitoring task. The "comfort" studies enabled the Psychophysiological Stress Section to observe possible physical and psychological stresses involved in the seat and confinement study.

SEAT DESCRIPTION: The net seat is constructed of a tubular metal frame covered with Nylon Raschel Knit Cloth. The fabric configuration permits a contour body fitting to the seat. The seat is adjustable to meet individual physical configurations. There are several seat adjustments including launch, work, and resting positions. An adjustable arm rest is incorporated in the seat design. All auxiliary aspects, i.e., headrest and footrest are adjustable to individual dimensions.

SUBJECTS: A panel of six subjects from the acceleration-deceleration subject pool participated in the study. All were adult, males, currently on active duty in the Air Force. Participation was voluntary and all subjects were considered well motivated and capable of reasonable objectivity in reporting their reactions to the controlled seat evaluation.

EVALUATION PROCEDURE: The evaluation consisted of six "runs" with each subject confined to the net seat for a period of twenty-four hours. During the testing sessions, the subjects wore Air Force flight suits and comfortable shoes. A pre-test questionnaire was accomplished by each subject regarding physical status prior to the start of the experiment.

The net seat was installed in a soundproof chamber equipped with a chemical lavatory. Food and water were stored in a portable ice chest and were readily available to the subjects during the twenty-four hour period. The subjects were permitted to eat and rest during the scheduled work breaks.

Each subject was required to monitor a matching task throughout the twenty-four hour period. This task consisted of attending a series of patterns flashed on a small screen and signalling when the patterns matched. The task required the constant attention of the subjects with the exception of a brief variable rest period each hour. This task required consistent alertness from the subject and enabled us to evaluate the net seat under a prolonged simulated work condition.

During the seat evaluation session the subjects reported, each hour, via the intercom system their comfort-discomfort rating. The monitor recorded these hourly subject reports and noted any significant subject's remarks regarding general comfort-discomfort. Following the twenty-four hour period a post evaluation was conducted and the subjects rated the seat for comfort for the total period.

COMFORT RATING: The following comfort-discomfort index was used:

VC - Very Comfortable

C - Comfortable

N - Neutral

U - Uncomfortable

VUC - Very Uncomfortable

This rating key was applied to the following body regions:

Head	Back
Neck	Buttocks
Shoulders	Thighs
Arm	Lower Legs

Total Comfort

RESULTS: Each of the six subjects completed the twenty-four hour run and there was no report of any significant prolonged discomfort. Each item for the individual subjects was scored and the following score ranges (distribution) resulted.

577-720	Very Comfortable
433-576	Comfortable
289-432	Neutral
145-288	Uncomfortable
000-144	Very Uncomfortable

The following composite scores were realized for the various body regions:

Shoulders	565	Neck	541
Arms	548	Buttocks	512
Thighs	545	Lower Legs	500
Head	544	Back	481

Total Comfort (overall)	546
Mean Comfort Index	535

The scores indicate that all body regions were reported within the comfortable range. The scores are based on an average (mean) of the six subjects. The findings for the individual body ranges is entirely consistent with the total comfort index and with the post-evaluation score. On the post-evaluation interview four subjects rated the net seat as comfortable and two subjects rated the seat at the neutral plus level of comfort. In every instance there was no report of any residual or past discomfort. The subjects found the seat acceptable for the prolonged monitoring task. The back and lower leg body regions seemed to provoke the most relative discomfort for certain of the subjects. This was, however, most variable and there was no evidence of any intolerable discomfort. It was noted that no body region realized a consistent and progressive decline in comfort. All body regions seemed to experience variation in comfort throughout the twenty-four hour period. In many instances an improved comfort index was reported followed by several hours of previous less comfortable rating. The majority of the subjects experienced a change in the overall comfort of the seat after nineteen hours of seat confinement. The rating for four of the six subjects went from comfortable to neutral. This shift does not indicate discomfort, but suggests that fatigue from the prolonged wakefulness experienced by the subjects may have precipitated the neutral comfort report.

The comfort study would, in general, indicate that the net seat remained comfortable for the twenty-four hour evaluation session.

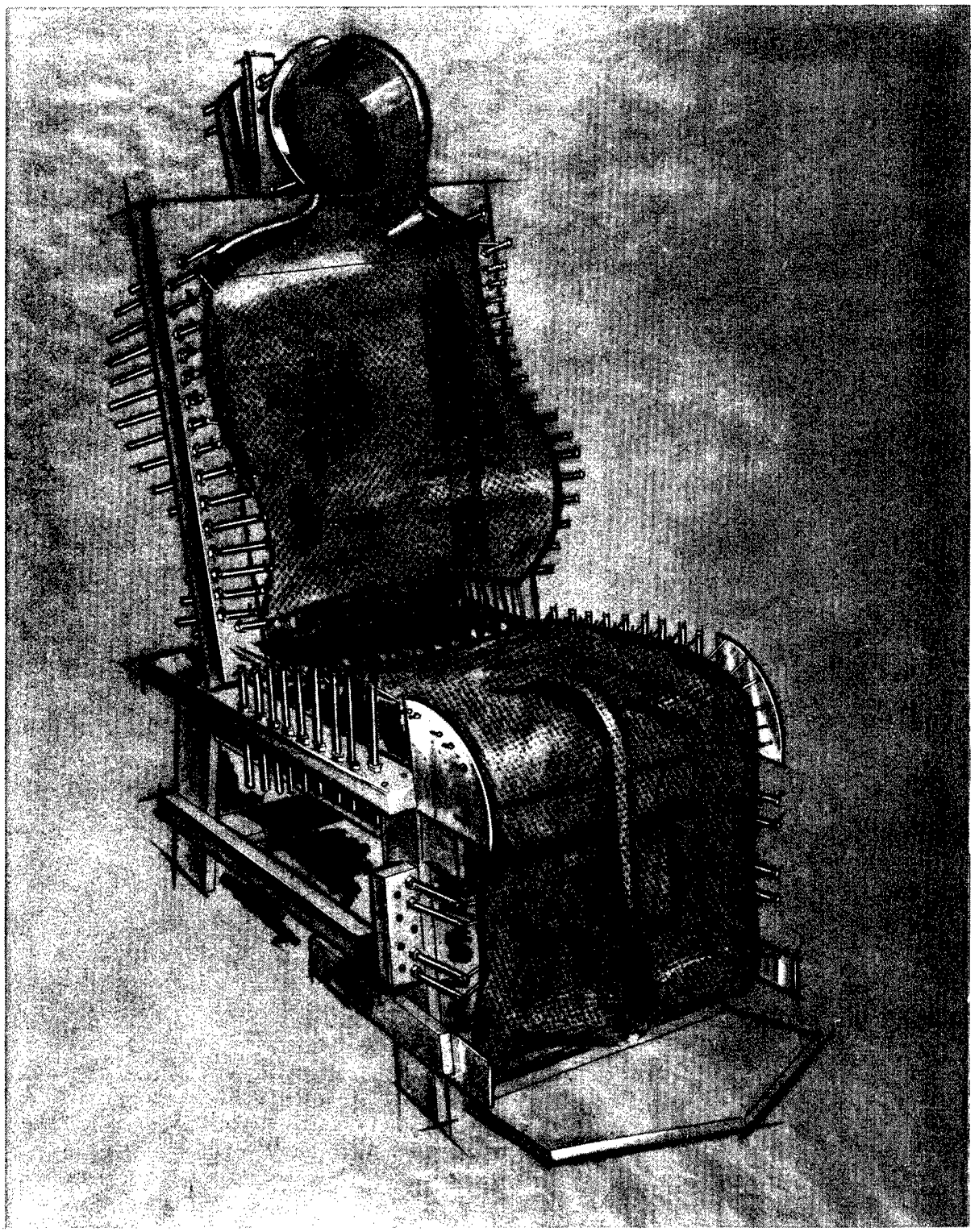

Figure 1. NET SEAT DELINEATOR

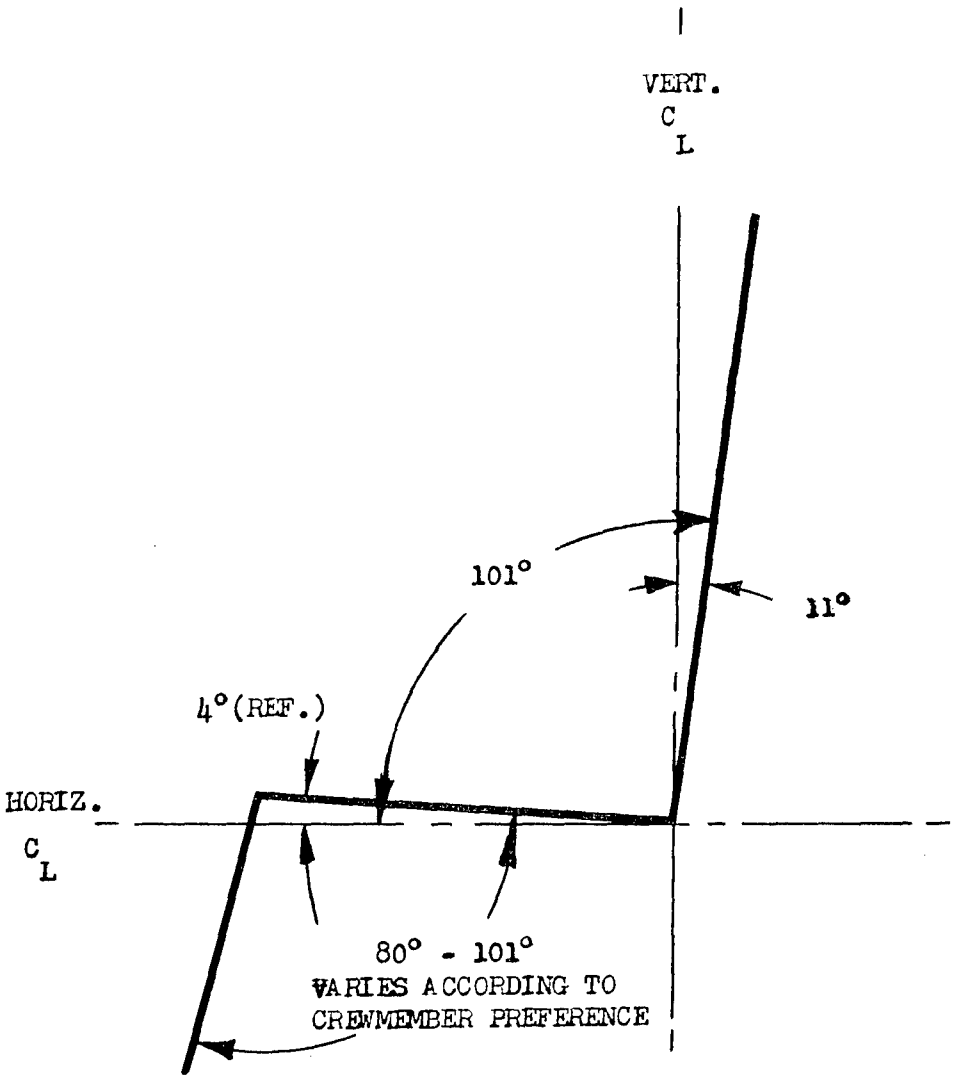

Figure 2. NET SEAT WORK POSITION ANGLES

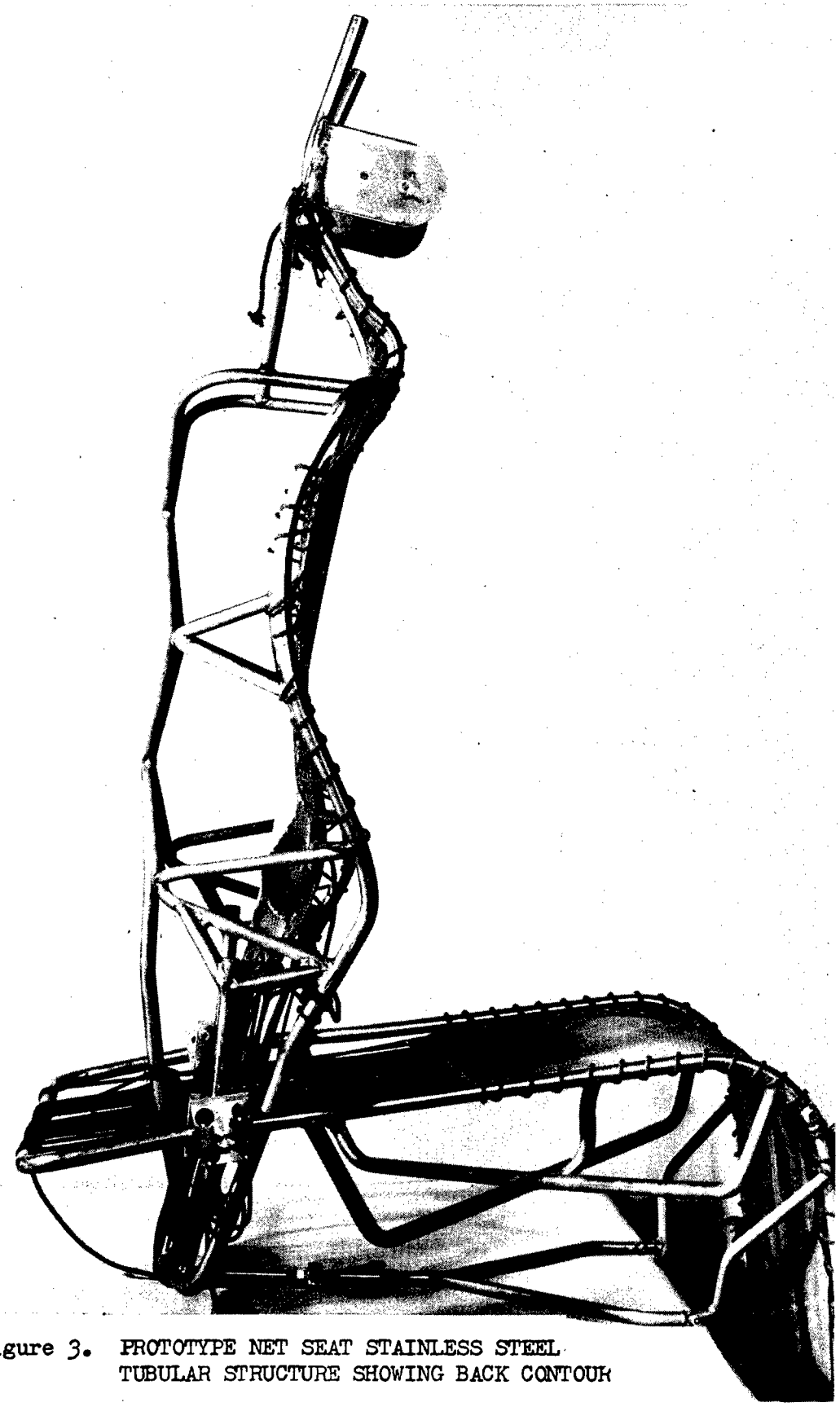

Figure 3. PROTOTYPE NET SEAT STAINLESS STEEL TUBULAR STRUCTURE SHOWING BACK CONTOUR

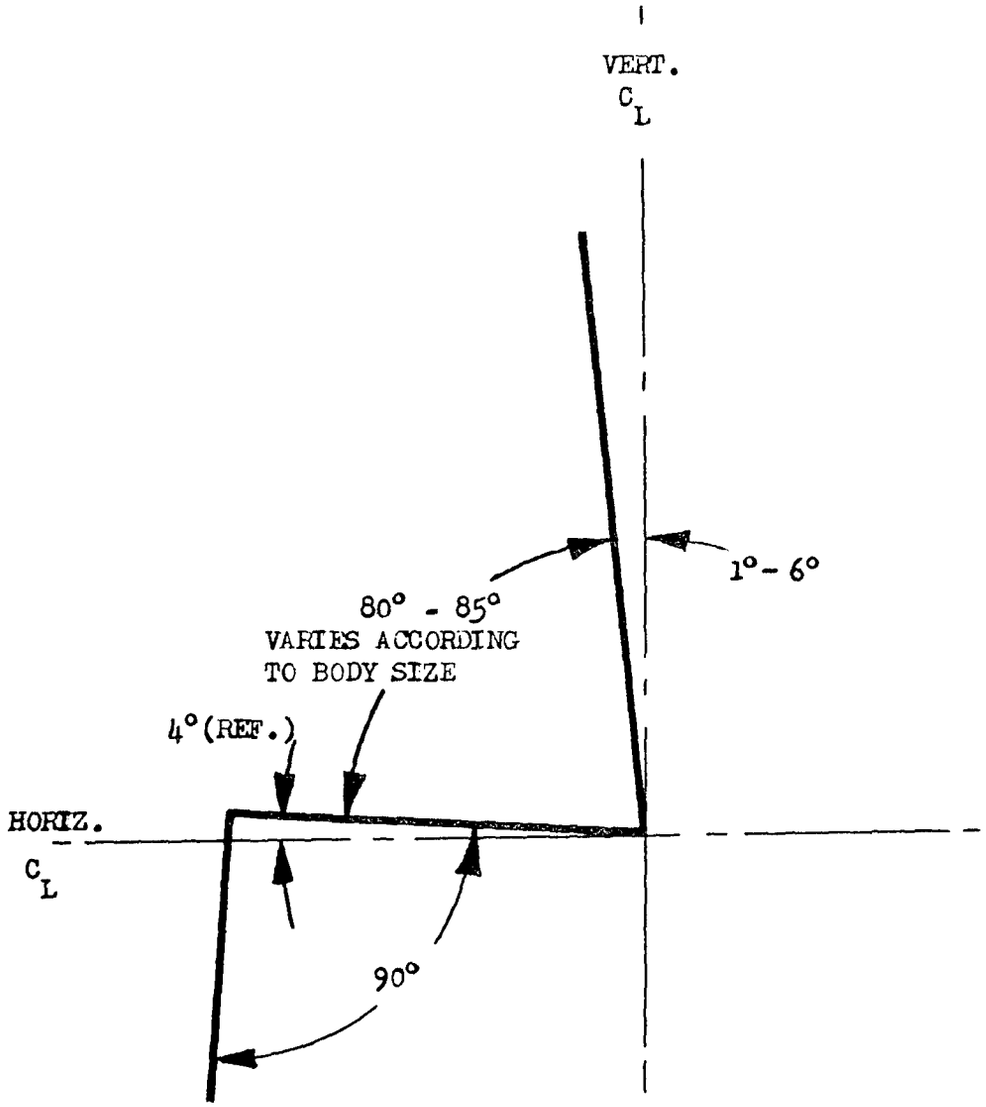

Figure 4. NET SEAT LAUNCH POSITION ANGLES

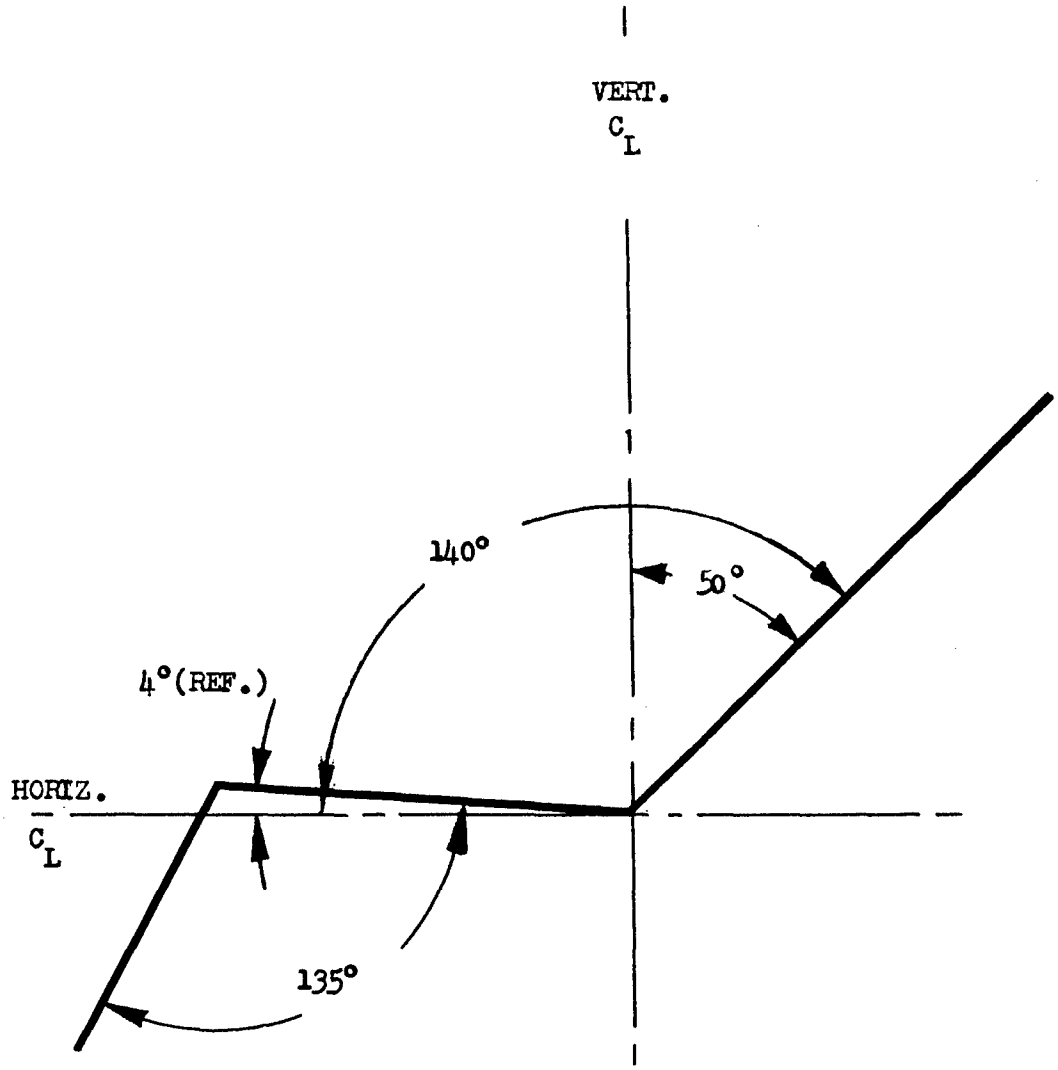

Figure 5. NET SEAT REST POSITION ANGLES

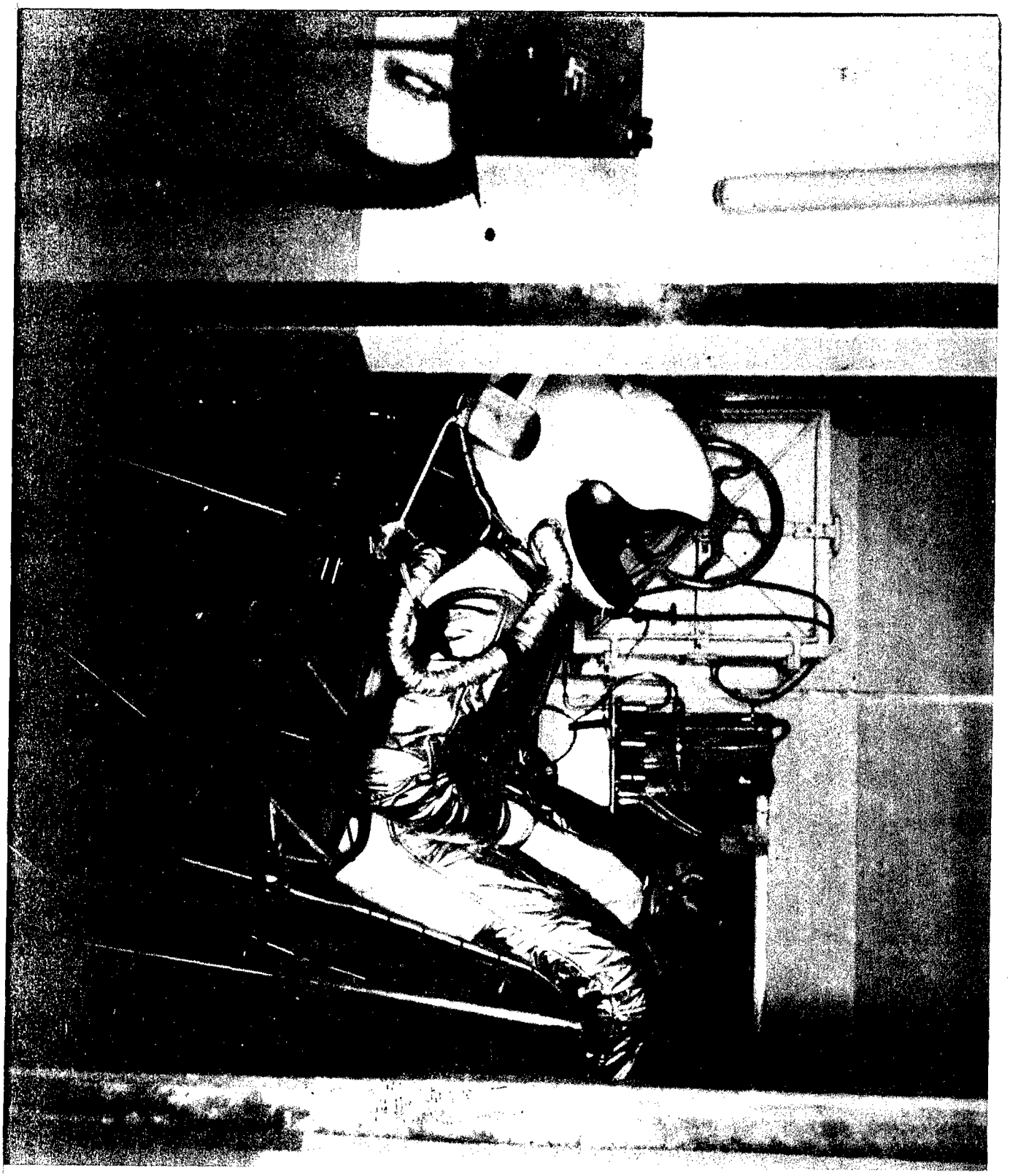

Figure 6. NET SEAT WITH SUBJECT WEARING FULL PRESSURE SUIT IN THE ASD HIGH ALTITUDE PRESSURE CHAMBER

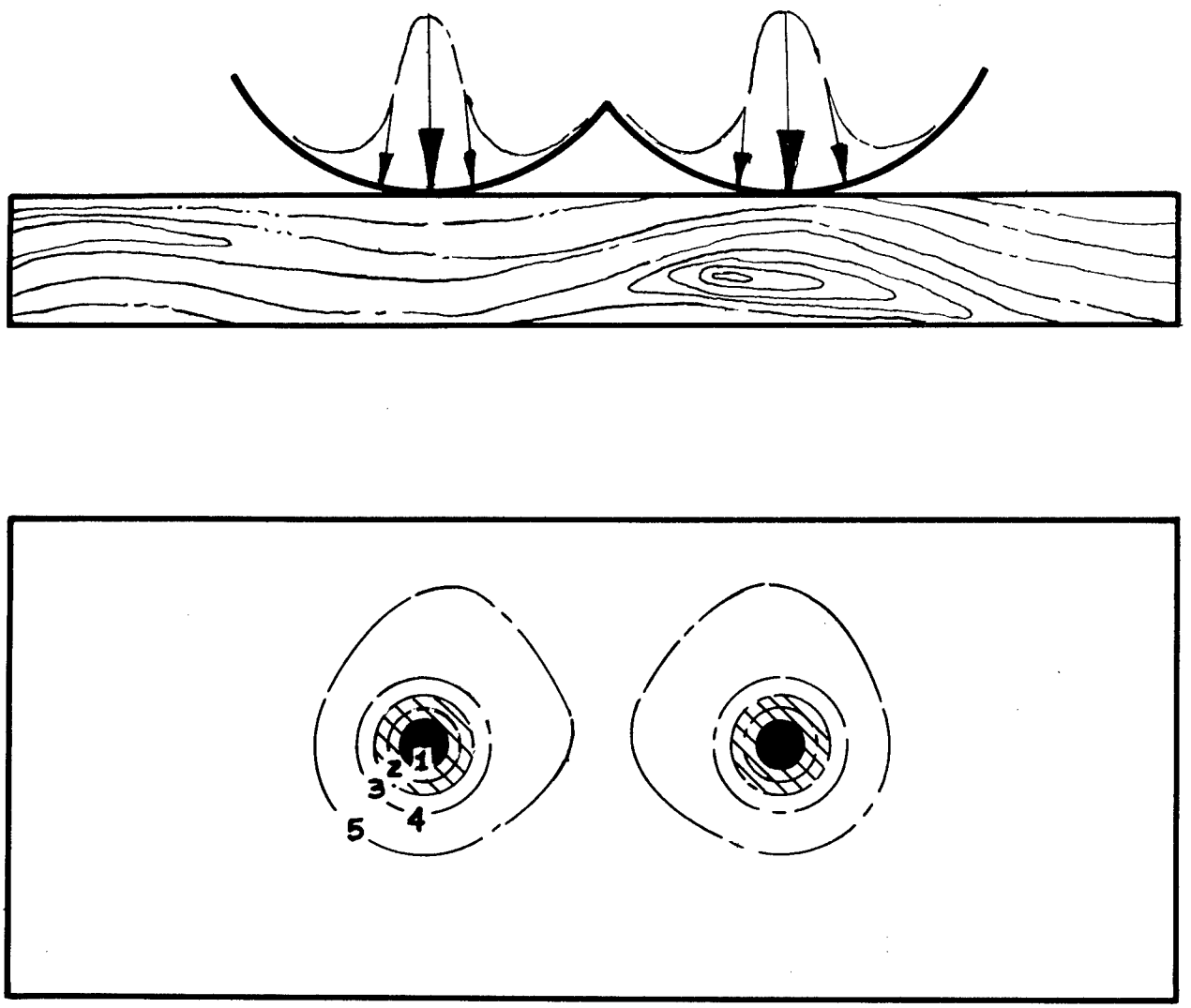

Figure 7. PRESSURE DISTRIBUTION OF BUTTOCKS ON A FLAT PLATE

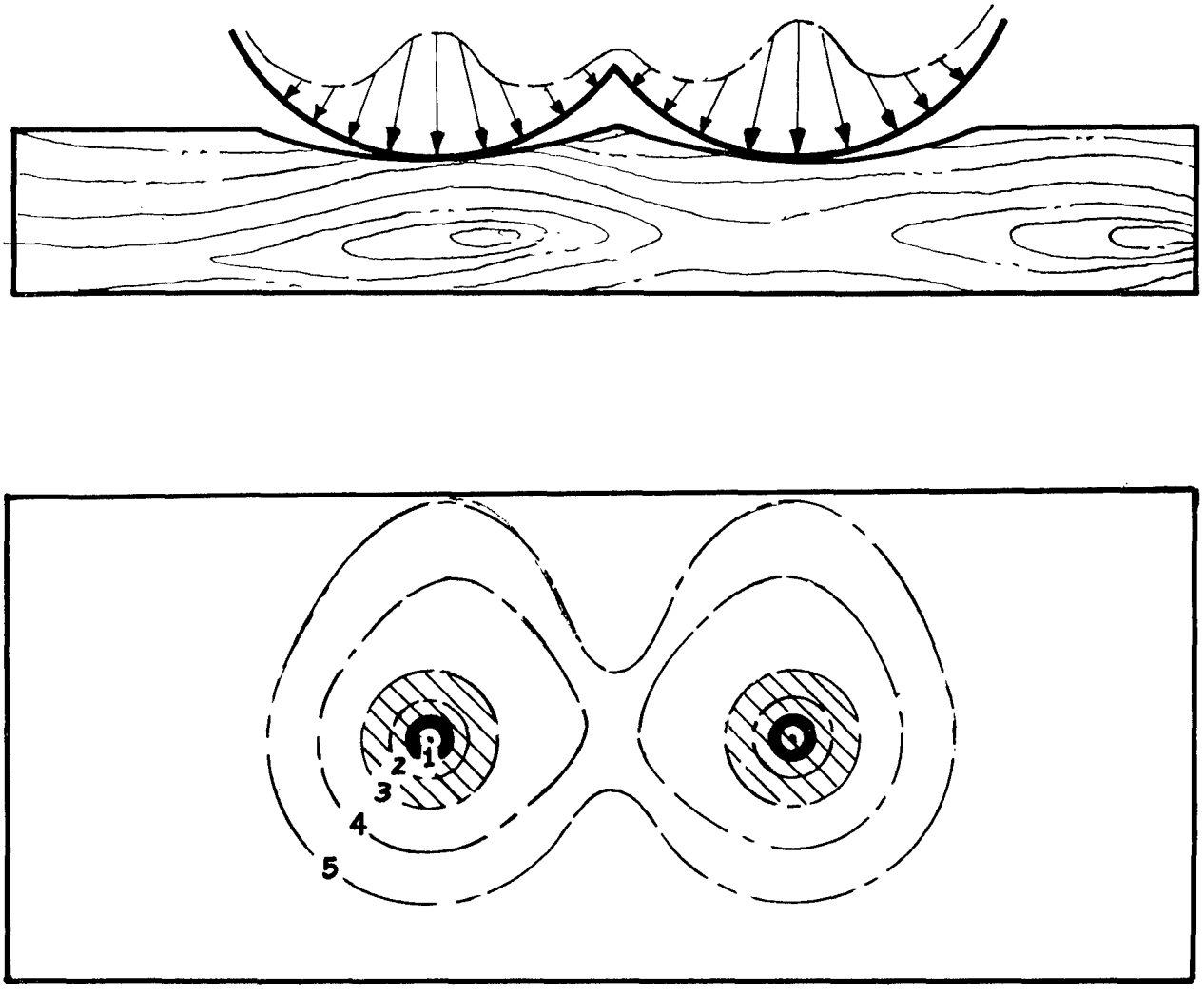

Figure 8. PRESSURE DISTRIBUTION OF BUTTOCKS ON A CONTOURED SURFACE

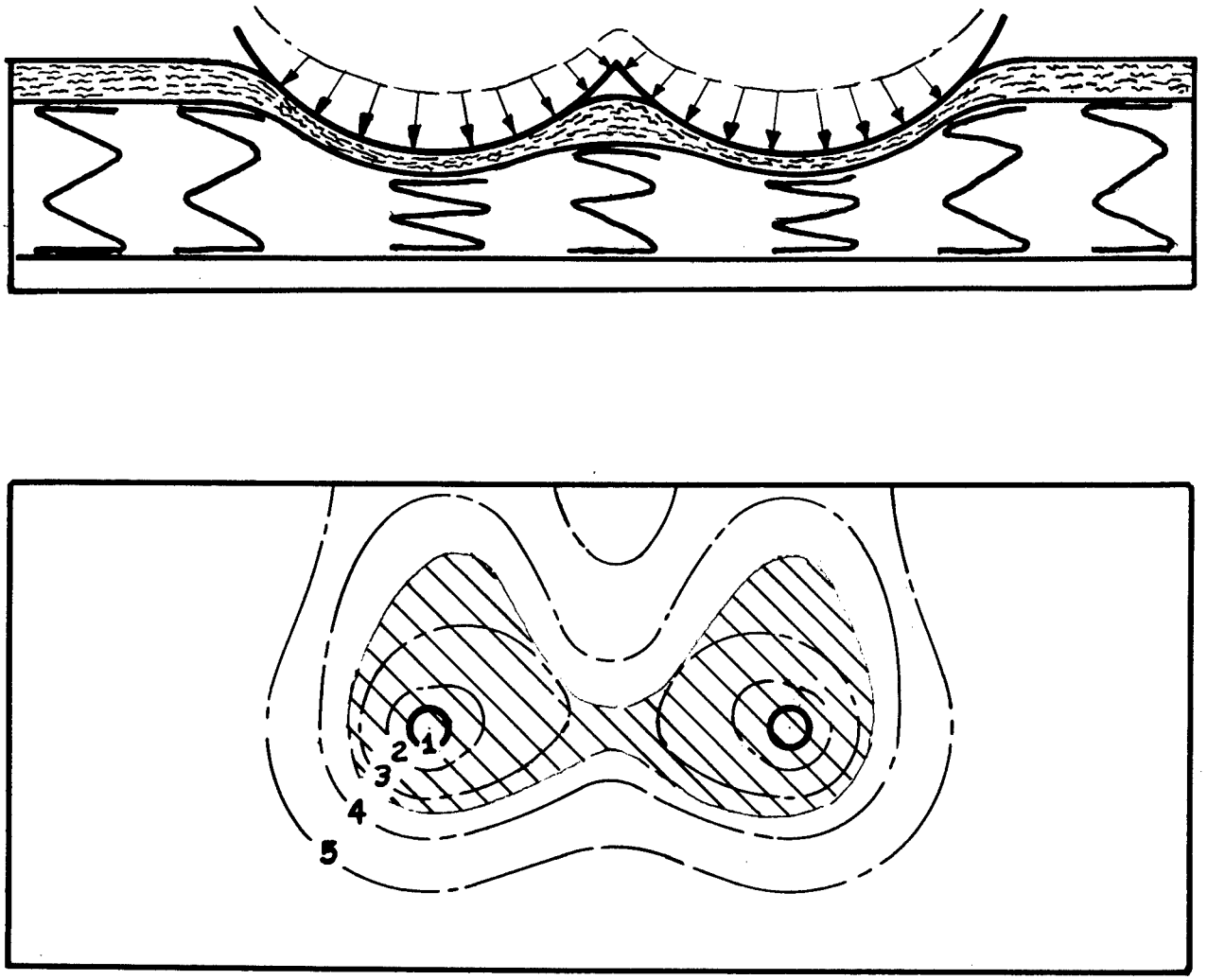

Figure 9. PRESSURE DISTRIBUTION OF BUTTOCKS ON A SPRING SUPPORTED CUSHION

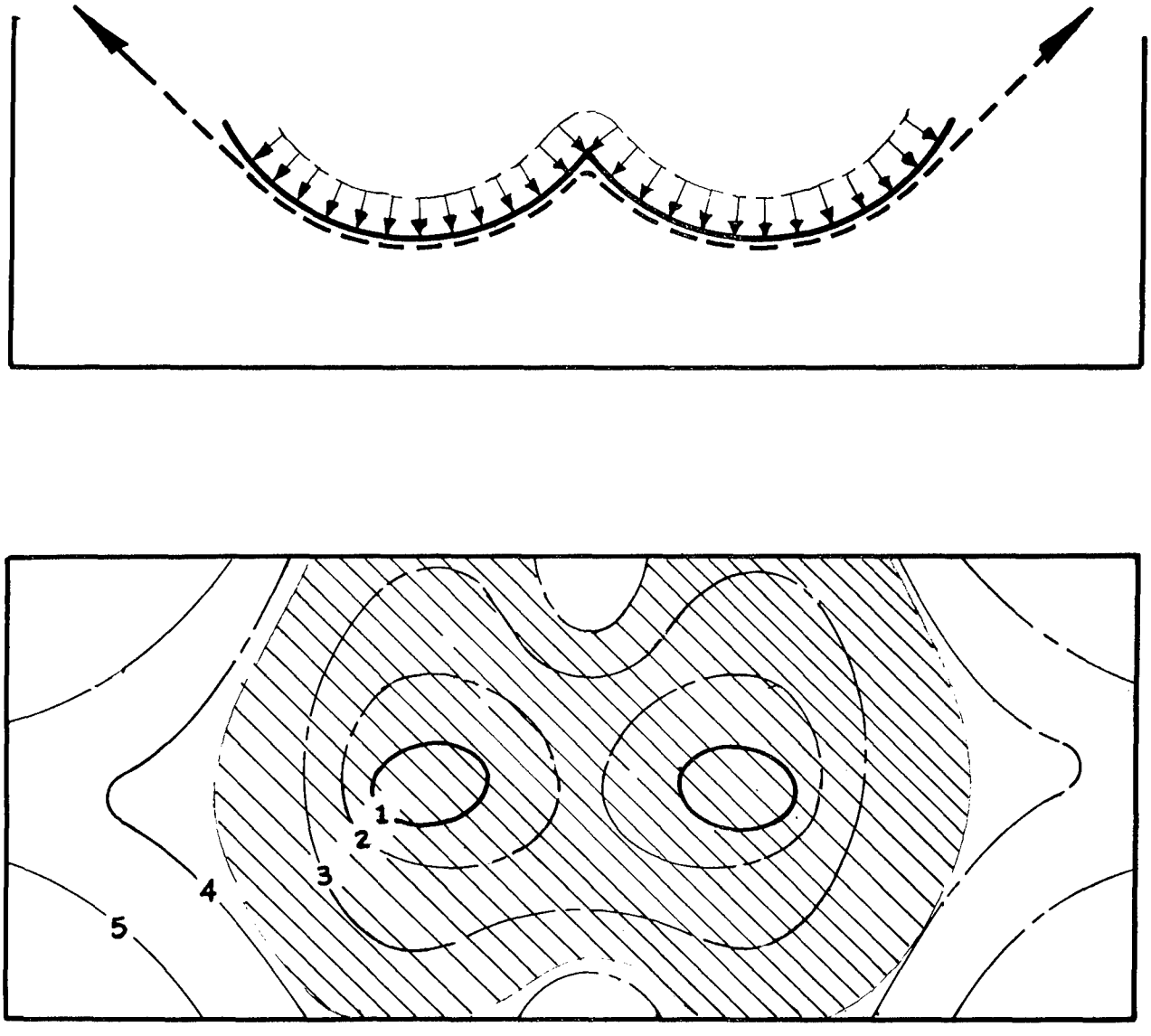

Figure 10. PRESSURE DISTRIBUTION OF BUTTOCKS ON A SUSPENDED RASCHEL KNIT CLOTH