AEDC-TR-66-260

MAY 15 1986

INDUCTIVE POWER SUPPLY FOR A 100-IN. HOTSHOT WIND TUNNEL

J. N. Patterson

ARO, Inc.

PROPERTY OF U.S. AIR FORCE
AEDC TECHNICAL LIBRARY

March 1967

TECHNICAL REPORTS
FILE COPY

Distribution of this document is unlimited.

VON KÁRMÁN GAS DYNAMICS FACILITY
ARNOLD ENGINEERING DEVELOPMENT CENTER
AIR FORCE SYSTEMS COMMAND
ARNOLD AIR FORCE STATION, TENNESSEE

INDUCTIVE POWER SUPPLY FOR A 100-IN. HOTSHOT WIND TUNNEL

J. N. Patterson
ARO, Inc.

Distribution of this document is unlimited.

AF - AEDC
Arnold AFS Tenn

FOREWORD

The Inductive Power Supply described herein was designed and installed by the General Electric Co. under U. S. Corps of Engineers Contract Number DA-40-126-Eng.-301. The Air Force Program Element No. is 65402234.

The modifications discussed were made by ARO, Inc., (a subsidiary of Sverdrup & Parcel and Associates, Inc.), contract operator of Arnold Engineering Development Center (AEDC), Air Force Systems Command (AFSC), Arnold Air Force Station, Tennessee, under Contract AF40(600)-1200. The manuscript was submitted for publication on November 23, 1966.

The author gratefully acknowledges the technical contributions of members of the von Kármán Plant Operations and Hypervelocity Branches, and Mr. M. D. Horton of the General Electric Co.

This technical report has been reviewed and is approved.

James N. McCready
Major, USAF
AF Representative, VKF
Directorate of Test

Leonard T. Glaser
Colonel, USAF
Director of Test

ABSTRACT

This report describes a 100-million joule inductive power supply. A description of all major, or unique, components is presented. The supply furnishes energy primarily to a 100-in. test section Hotshot Tunnel; however, other applications have been made since the initial operation. The system theory of operation is presented along with major operational problems that have developed during the five years the system has been in operation.

CONTENTS

		Page
	ABSTRACT	iii
	NOMENCLATURE	vii
I.	INTRODUCTION	1
II.	COMPONENT DESCRIPTIONS	
	2.1 Acyclic Generators	2
	2.2 Energy Storage Flywheels	4
	2.3 Variable Speed Coupling	4
	2.4 Drive Motors	5
	2.5 Energy Storage Coil	5
	2.6 B-Field Coils	7
	2.7 Switching	7
	2.8 System Insulation and Overvoltage Protection	8
	2.9 Safety Features	9
	2.10 Instrumentation	9
	2.11 Annunciator and Alarm System	11
III.	ELECTRICAL CONFIGURATION	
	3.1 Arc Chamber Load	11
	3.2 B-Field Load	14
IV.	CONTROL SYSTEMS	
	4.1 M-G Set Speed Control	15
	4.2 Generator Voltage Control	15
	4.3 Switching Control	16
	4.4 Automatic Firing Control	16
	4.5 Generator Ground Check Circuits	18
V.	MODE OF OPERATION	
	5.1 Arc Chamber Load	19
	5.2 B-Field Coil Load	20
	5.3 One Set Operation	21
	5.4 Current Test	21
VI.	THEORY OF OPERATION	21
VII.	ENERGY STORAGE AND SYSTEM CAPABILITIES	25
VIII.	OPERATIONAL PROBLEMS	
	8.1 Excessive Storage Coil Movement	27
	8.2 Generator Insulation Failures	30
	8.3 Switching	31
	8.4 Determination of System Current	33
IX.	CONCLUDING REMARKS	34
	REFERENCES	35

TABLE

		Page
I.	Summary of Power Supply Parameters with Arc Chamber Load.	14

APPENDIX
Illustrations

Figure		
1.	Power Supply System Configuration	39
2.	Basic Schematic Diagram.	41
3.	Simplified Sketch of Acyclic Generators	42
4.	Basic Energy Storage Coil Construction	43
5.	SW-1 Opening Characteristics.	44
6.	Complete Power Supply Schematic Diagram.	45
7.	Coil Cable Connecting Details	46
8.	Typical Load Bus Cable Connections and Details . .	47
9.	B-Field Load Schematic Diagram	48
10.	M-G Set Speed Control-Basic Block Diagram	49
11.	Generator Voltage Control-Basic One-Line Diagram	50
12.	Switching Control System.	51
13.	Automatic Firing Circuit-Schematic Diagram. . . .	52
14.	Generator External Insulation Details	53
15.	Basic Schematic Diagram - Generator Insulation Check Circuit	54
16.	Typical Run Curves	
17.	Theoretical Currents as a Function of Time and Initial Generator Voltage	57
18.	Parameter 'b' as a Function of Initial Generator Voltage	58

Figure		Page
19.	Theoretical Generator Terminal Voltage during Charging Cycle as a Function of Time for Various Generator Initial Voltages.	59
20.	Current as a Function of Time for B-Field Load . . .	60
21.	Generator Speed versus Current, Initial Voltage, and Time for B-Field Load.	61
22.	Generator Speed versus Time, Current, and Initial Generator Voltage	62
23.	Generator Terminal Voltage versus Time	63

NOMENCLATURE

B	Magnetic field density, guass or webers per meter^2
C	Capacitance, farads
E	Steady-state voltage
e	Time varying voltage
F	Force, lb
i	Instantaneous current, amp
J_m	Moment of inertia, lb-ft^2
K	Coefficient of coupling between two inductively coupled circuits
L	Inducance, henries
M	Mutual inductance, henries
MCM	Thousands of circular mills
P	Electrical power, w
p_M	Magnetic pressure, psi
R	Resistance in ohms
t	Time, sec
W	Energy, w-sec or joules
ω	Angular velocity, radians/sec
ϕ	Flux lines

SECTION I
INTRODUCTION

The inductive power supply described in the following sections was designed to supply electrical energy to the arc chamber of the 100-in. hypervelocity tunnel (Gas Dynamic Wind Tunnel, Hypersonic (F)) (Refs. 1 and 2). The system is capable of delivering 100 million joules to a 0.02-ohm resistive load at a initial current of one million amperes and a maximum voltage of 20,000 v with a 10-msec discharge time.

The basic components of the system are four unipolar, or acyclic, generators connected through appropriate switching to a 36-segment, 12-turn air core storage coil.

Currents up to 1×10^6 amp are generated at a maximum of 90 v. At this voltage, the energy is not suitable for direct transmission to the load. The storage coil is utilized to transform a portion of this energy into a high voltage pulse with the peak current capability maintained.

The power supply has been modified to supply energy to two air core inductive coils which furnish a magnetic or B-Field for an experimental magnetohydrodynamic accelerator. No energy transformation is required; therefore, the coils are connected directly to the generator terminals through a single disconnect switch. The maximum current obtainable with this load is 280,000 amp with a run duration of 10 to 20 sec.

This report presents a general description of the power supply and its major components, along with the mode of operation. A theoretical analysis of the system is presented, and major problem areas are discussed.

SECTION II
COMPONENT DESCRIPTIONS

The system consists of two motor generator sets, each set having two acyclic generators, a 50-ton flywheel, a variable speed eddy current coupling, and a 1000-hp motor, all connected through flexible couplings. The two generators of each set are electrically connected in series, and the two sets are parallel connected through switches to the energy storage coil.

The configuration and basic schematic diagrams of the system are shown in Figs. 1 and 2.

Each drive system, except the eddy current coupling and motor, is supported in flood-lubricated sleeve bearings which are mounted in six bearing pedestals. Lubrication is provided by a normal lube system operated from a 25-kw d-c generator belted to the main drive shaft and an emergency system which is operated from an ordinary a-c feeder circuit. Flow switches are utilized at each bearing to monitor flow. Lube oil is contained in two 750-gal tanks to ensure a sufficient supply if a leak develops.

A 125-v d-c storage battery supply furnishes power for essential equipment if the d-c generator and a-c supply are lost.

Individual jacking pumps are provided for each bearing pedestal.

The system consists of numerous types of auxiliary equipment; however, only the basic components are described below.

2.1 ACYCLIC GENERATORS

In a commutator-type d-c machine, the generated voltage in the armature conductors reverses polarity each time the conductor passes through the neutral point between adjacent poles. The resulting alternating voltage is rectified by the commutator. This is not true of an acyclic generator. As the name implies, the acyclic generator conductor, which is the solid rotor, cuts flux lines in the same direction regardless of the conductor position. Generation of ripple free continuous voltage of one polarity results. This is the characteristic that an imaginary single pole generator would have; therefore, the often used name of unipolar generator results.

The voltage developed by such a machine is given by

$$E = \frac{rpm}{60} \times \theta \times 10^{-8} \text{ v} \tag{1}$$

Because the liquid metal brushes have undesirable current collecting characteristics if turbulent flow exists in the collector, the peripheral velocity of the collector must be limited to that which will maintain laminar flow in the liquid metal. The total flux is limited by the saturation properties of the iron pole pieces. Inherently, the acyclic generator is a low voltage machine.

Although the basic idea behind the acyclic generator is old, the use of a liquid metal mixture of sodium and potassium (NaK) as the active "brush" has made the generator a useful device. The NaK reacts violently with moisture and must be contained by a nitrogen atmosphere at all times. The NaK mixture used in the generators is 78-percent K and 22-percent Na by weight. The basic construction of the acyclic generators used in the power supply is shown in Fig. 3.

The air-gap flux is undirectional over the entire active rotor periphery between terminal collectors. The entire flux conducting path is inside the two collectors.

The useful voltage gradient lies entirely between the collectors; however, there is a generated voltage between each collector and the shaft. This is unavoidable since the flux path must pass through the rotor on the outboard side of each collector. The voltage generated is equal to half the machine terminal voltage.

The rotor is a solid steel forged cylinder which is copper clad in the region between the two collectors. This copper surface is required for this type of pulse application because it reduces the magnitude of the induced voltage across the generator terminals when the load current is suddenly removed. The rotating part of each collector is a steel disk which rotates in the liquid metal of the stationary collector.

The stator conductors and the stationary collectors are insulated from the stator frame and each other. The conductors make contact with the collectors and run symmetrically along the air gap surface to the center of the machine and out through slots in the stator core to adjacent positive and negative terminals.

During operation, NaK is contained in an annular raceway by the centrifugal force of the rotating collector ring. NaK is delivered after the machine is running at rated speed and is drained before half rated speed is reached on shutdown.

The collector system actually includes a rather complex labyrinth seal and metal flow arrangement. Each entire collector is at its terminal potential, and each must be isolated and insulated from ground.

The machine is completely sealed, operating in a pure dry nitrogen atmosphere at all times. A seal-oil system is provided for each motor-generator (M-G) set. Oil is supplied to the shaft exit seal arrangement of each machine, which minimizes nitrogen leakage. The generator nitrogen pressure is maintained at 0.5 psig.

Each of the two generators per set is capable of delivering 550,000 amp at 45 v for a duration of 8 sec, repeated once each half hour. Since the two generators of either set are connected in series, a maximum of 90 v is available. The rated speed of the machine is 1800 rpm.

Because the acyclic generator has no magnetic core losses and low resistivity and windage losses, the total losses are extremely low; and the efficiency, including all accessories, is about 98 percent.

References 3, 4, 5, and 6 give additional information and descriptions of the generators.

2.2 ENERGY STORAGE FLYWHEELS

The flywheels, which are rated at 410,000-hp seconds (306×10^6 joules) at 1800 rpm, are constructed of one-piece steel forgings. Each flywheel is 6.3 ft in diameter with a length of 5.2 ft. To reduce windage losses, the flywheels are enclosed in sheet metal housings. The air inside the housing is cooled by the circulation of air through air-to-water heat exchangers.

The rotating portion of each flywheel weighs approximately 44 tons.

2.3 VARIABLE SPEED COUPLING

The variable speed coupling is a water-cooled combination, eddy-current-type clutch and brake. The coupling consists basically of four assemblies: the clutch field, the brake field, the driven member or drum, and the driving member or rotor.

When the clutch field coil is excited, the magnetic lines of force flow from the north polar ring of the field assembly through the drum and into the rotor. As the rotor rotates in relation to the drum, these magnetic lines of force are sheared in the air gap between the tips of the rotor poles and the smooth inner surface of the drum, and eddy-currents are generated in the inner surface of the drum adjacent to the poles. The magnetic attraction of the field established by these eddy-currents induces the drum to rotate with the rotor.

The brake operation is similar, except the interaction is between a fixed outer magnetic surface and the outside of the smooth drum.

2.4 DRIVE MOTORS

The drive motors are 1000-hp squirrel cage induction types, 6600 v, 3 phase, 60 cycle with a no load rated speed of 1800 rpm. The motors are designed to operate at 150-percent rated load for periods up to 15 min. Each motor is connected through standard switch gear units.

2.5 ENERGY STORAGE COIL

The storage coil is an air core type with a nominal inductance of 200 microhenries. The coil has a vertical axis, is cylindrical, and has a diameter of 12 ft. The air core is 5 ft in diameter and is 5 ft high. It is wound with rectangular copper cables, which have transposed insulated rectangular stranding.

The coil is composed of 36 segments of 12 turns each. A segment is defined as being electrically independent of all other conductors. In effect there are 36 parallel coils that together form the integrated coil. This can be seen in Fig. 4 which gives the basic details of the coil.

The coil is divided into two halves, which are mirror-images, with 18 segments in each half. This is an important design feature because it minimizes the voltage differential between the upper and lower coil halves. If both halves were identical, the full 20-kv pulse voltage would appear across the center plane separating the two coil halves. Each segment enters a coil half at a terminal point, makes one complete turn, crosses to the next lower level, makes another turn and crosses to the third level under the entry terminal. This pattern is continued until 12 turns have been completed, then the segment exit is made under the entry terminal. Each segment is physically adjacent to any other segment numbered one higher or lower (1 and 18 are exceptions).

The coil terminals (1 through 18) are subjected to pulse voltages of up to 20,000 v during the energy discharge period. However, since each segment is 12 turns and each adjacent segment is near the same potential at any specified point, the coil insulation is made up of small air gaps between each layer and ordinary fiberglass doped tape around each segment. The insulation is critical at the segment crossover points, especially on the inside of the coil.

Each segment conductor is composed of two adjacent rectangular cables as shown in Fig. 4. Each cable has 29 formex insulated strands with a strand transposition every 3 in.

Each segment has an inductance of approximately 7.2 millihenry and a resistance of one milliohm resulting in a two terminal resistance of 27.7 micro-ohms.

To clearly show how the inductances of each coil half and the mutual inductance between halves contribute to the equivalent total inductance, the coil must be analyzed as follows. From Fig. 2, it can be seen that the loop equations for the charging currents are

$$v_1 = R_1 i_1 + L_1 \frac{di_1}{dt} + M_{21} \frac{di_2}{dt} \tag{2}$$

$$v_2 = R_2 i_2 + L_2 \frac{di_2}{dt} + M_{21} \frac{di_1}{dt} \tag{3}$$

The sign of the mutual inductance turn is positive because of the physical arrangement of the coil. And since air is the media

$$M_{12} = M_{21} = M \tag{4}$$

Multiplying Eqs. (2) and (3) by i and recognizing that the total power delivered by the M-G sets, less power dissipated as heat, is the power utilized to store energy in the magnetic field, yields

$$p = L_1 i_1 \frac{di^1}{dt} + Mi \frac{di^2}{dt} + Mi_2 \frac{di^1}{dt} + L_2 i_2 \frac{di_2}{dt} \tag{5}$$

The change of energy in the coil is

$$dW = pdt \tag{6}$$

Substituting this into Eq. (5) yields

$$W = \tfrac{1}{2} L_1 i_1^2 + Mi_1 i_2 + \tfrac{1}{2} L_2 i_2^2 \tag{7}$$

And $M = K\sqrt{L_1 L_2}$ where K is the coefficient of coupling between L_1 and L_2 and for the storage coil approaches unity. Since the two coil halves are identical, $L_1 = L_2$. Therefore

$$M = \sqrt{L_1^2} = \sqrt{L_2^2} = L_1 = L_2 \tag{8}$$

Normally

$$i_1 + i_2 = i_T$$

then Eq. (7) becomes

$$W = \tfrac{1}{2} \left[\frac{L_1 + L_2 + 2M}{4} \right] I_T^2 \tag{9}$$

Then the L of the coil must be

$$L = \frac{L_1 + L_2 + 2M}{4} \tag{10}$$

Substituting Eq. (8) into (10) yields

$$L = L_1 = L_2 = M = M_{12} = M_{21} = 200 \times 10^{-6} \text{ henries} \tag{11}$$

This equation clearly shows that the self inductance of each coil half and the mutual inductance of each half, with respect to the other half, is equal.

The coil weighs 110,000 lb and has a time constant of 8 sec. When pulsed to its rated current of one million amperes, the coil stores 100 million joules of energy resulting in a flux density at the center of the air core of 80,000 gauss. The coil is designed to release this energy within 0.01 sec.

2.6 B-FIELD COILS

The two B-Field coils are designed to produce a maximum field density of 10 webers per meter^2 over a length of 18 in. The coils are constructed of magnet wire, each of the 39 turns displacing the full coil length. The coils are air core types with a length of 19 in. and a diameter of 52 in. The core has a diameter of 18.2 in.

The maximum designed field strength requires a current level of 285,000 amp with an initial coil terminal voltage of 70 v.

Each coil has an inductance of 530 microhenries, a resistance of 531 micro-ohms, and a designed current density of 25,000 amp/in.^{2}.

2.7 SWITCHING

The energy generated and stored in the power supply system is controlled by two primary switching units. Switch number one (SW-1) connects the generator terminals to the coil, and switch number two (SW-2) connects the coil to the load. SW-1 and SW-2 are interlocked and must operate in a predetermined sequence.

SW-1 consists of four 3000-amp, 14-kv a-c, 3-pole, high capacity switches in metal enclosures, with all 12 poles connected in parallel. The individual breakers are standard a-c breakers that have been modified to accommodate the d-c current pulses.

With this configuration, SW-1 is rated at 1,100,000 amp for a period of 6 sec. Contacts close with no current in-rush, and contacts open when

the current reaches the desired level, provided SW-2 has already closed. The switch in the open position is capable of withstanding a 25-kv d-c voltage pulse having a 0.01-sec discharge time. The switch opening characteristic is shown in Fig. 5.

SW-2 is a specially designed switch for this particular application. The switch closes on negligible current and voltage and is always opened with zero current and voltage. The switch is designed to carry 1,100,000 amp maximum for a period of 0.30 sec. The switch is insulated for 25,000 v to ground. The general arrangement of the switch is that two sets of movable contacts engage or separate from a stationary pair of contacts. The movable contacts are composed of 40 spring loaded bridges or 20 per movable contact. The movable contact bridges are mounted on heads operated by two pneumatic cylinders (top and bottom) in a manner that provides articulation of freedom to adjust position as forced by the stationary contacts. The cylinders provide an initial closing force of 60 lb at each contact tip, followed by a 1/4-in. wipe with a final tip force of 90 lb each.

The sequence of operation for the above switches is reserved for a later section.

SW-4 connects the B-Field coils to the generator buses. The switch is composed of eight individual knife switches mounted on a common shaft and operated by a single air cylinder. Each knife switch is capable of carrying 70,000 amp for durations not exceeding 10 sec.

The switch design requires that the switch open and close with negligible current flow through the circuit.

In the fully open position, the switch is capable of withstanding the 20,000-v pulse associated with the operation of the arc chamber load.

2.8 SYSTEM INSULATION AND OVERVOLTAGE PROTECTION

There are two basic insulation systems present in the M-G sets and their accessories. Because of the inherent design of the acyclic generators, a potential exists between shafts of each generator of the same set. The low voltage insulation system includes insulated couplings between all units, except the motor and variable speed coupling, and the shafts are insulated from the bases to prevent the flow of shaft currents. In addition, the generator frames, shaft seal parts, and NaK piping are insulated.

The entire motor-generator set, with all auxiliaries, is insulated for 20,000-v peak to ground. All nitrogen, water, and oil lines are

insulated. In addition, the M-G set bases, the NaK reservoirs, and the lubrication systems are mounted on ceramic-type porcelain insulators. This system is commonly referred to as the floating ground system and is electrically connected, through a manual switch and breaker, to true ground except during a pulse generation. A 5-ohm resistor connects the two grounds at all times.

With an inductive-type system, there is always a danger of overvoltage if the load should malfunction (open circuit), since the coil voltage will rise to a potential necessary to sustain the initial coil current flow. To protect against this possibility, a protective gap is installed in parallel with the arc chamber load that will short at approximately 30,000 v. The gap is designed to dissipate the maximum system stored energy. The gap has a discharge time constant of 5 sec after the shorting device closes.

Although high voltages are not directly envolved, protective devices are necessary across each B-Field coil. These are required to prevent the possibility of high voltages damaging the coil insulation if the circuit should be suddenly interrupted while carrying current.

Two types of devices are used. A 2500-v cutout disk is the primary protection. The disk is secured between two copper electrodes and becomes a short circuit when the puncture voltage is exceeded. A 0.5-ohm parallel resistor limits the L di/dt voltage to a safe value when the initial current in each coil is below 2000 amp.

2.9 SAFETY FEATURES

The maximum energy stored in the coil is capable of lifting a 4000-lb automobile 3.5 miles straight up. The energy stored in the two flywheels at rated speed is seven times greater. If this energy were suddenly released to the building interior, the concussion alone would be a serious hazard to personnel. For this reason, personnel are not allowed in the building at any time when the system is generating current. To ensure the safety of personnel involved, a key interlock system is installed to force operating personnel to lock the building before a pulse can be initiated from the remote control console.

2.10 INSTRUMENTATION

The system is equipped with two basic instrument systems. A low speed system, which consists of a 12-channel electric writing recorder, monitors variables that are associated with the power supply operation.

These variables are generator field currents and terminal voltages, set speed and set total current. The set currents are obtained from a calibrated section of each set bus. At ambient temperatures of 72°F, 1×10^6 amp is equivalent to 2 v.

The high speed system is a 48-channel galvanometer-type recorder with only 24 channels used. The recorder has a paper speed of 60 in./sec. This system is used to monitor variables that are of interest during the pulse period, which is usually 10 to 20 msec. The following measurements are normally made and recorded by the high speed system.

1. di/dt on each of the 12 poles of SW-1
2. Current in outside bus of Set No. 1
3. Current in inside bus of Set No. 1
4. Current in outside bus of Set No. 2
5. Current in inside bus of Set No. 2
6. Current in load bus
7. Set No. 1 coil half voltage
8. Set No. 2 coil half voltage
9. Arc voltage
10. Arc current
11. Total system current measured in energy storage coil
12. Backup measurement for (11)

Measurement of di/dt of the SW-1 poles is accomplished using search coils mounted concentrically about the bus work. The search coil outputs are amplified and fed to the recorder galvanometers.

The currents of (2), (3), (4), (5), (6), and (10) are measured using search coils and integrating the coil outputs with d-c operational amplifiers connected as active integrators. The load bus current is calibrated so that normal deflections are obtained when SW-2 closes. The arc current is calibrated for normal deflections at system current.

The three voltages are measured using standard high voltage dividers with a ratio of 1×10^{-3}. The divider outputs are fed directly to the recorder galvanometers.

The measurements for (11) and (12) are made using search coils mounted inside the storage coil and active integrators. This system will be discussed in detail in a subsequent section.

2.11 ANNUNCIATOR AND ALARM SYSTEM

A 104-circuit flag drop annunciator, along with an audible alarm, warns operating personnel of unsafe, or harmful, conditions. This also assists maintenance personnel in locating the source of trouble.

Critical control functions, pressures, flows, etc., are monitored by the system. A visual flag reveals the exact nature of the trouble, and the bell must be reset to prevent continuous ringing.

Each annunciator circuit consists of the monitoring device (pressure switch, flow switch, or relay contacts) in series with the flag drop relay and lockout or warning relay. Trouble that could cause system damage is monitored by a lockout circuit that either turns the generators off or de-energizes the drive motors. The malfunction must be located before the lockout can be reset.

SECTION III
ELECTRICAL CONFIGURATION

3.1 ARC CHAMBER LOAD

A simplified diagram of the existing power supply system is shown in Fig. 1b, top drawing. This configuration places the generators and storage coil in series during the charging cycle, and the load in series with both components during the high voltage discharge.

The fuse device must be used in the arc chamber as the final energy transfer switch. It begins to conduct during the SW-1 opening period and continues to conduct until the SW-1 is open and de-ionized. If the fuse were in series with the coil and generators during the charging cycle, it would sever, and the energy stored in the coil would then be released to the gas. This would prevent a controlled energy transfer. Other configurations are possible; however, problems with commutation and fuse protection during the charging cycle are encountered, as discussed below.

An alternate system configuration is shown in Fig. 1b, bottom drawing. It can be shown (see Section 8.3) that the minimum energy dissipated in SW-1 of either circuit during current commutation is equal to the ratio of the load inductance and storage coil inductance times the initial stored energy. This does not consider energy stored in the inductance of the switch circuit. For the existing circuit, this inductance is approximately 0.3 microhenries, which compared to the inductance of the load loop is

negligible. This inductance is minimized by physically connecting the load near each SW-1 terminal.

In the alternate circuit, the inductance of the SW-1 circuit is unavoidably high because of the physical size and structure of the generators and buses.

Minimizing the inductance of the four generators along with the associated buses would be a major task. Assuming this inductance to be at least equal to the load inductance, SW-1 must dissipate the energy required for current commutation plus an equal energy stored in the inductance of the switch circuit.

Another important consideration is arc chamber fuse protection. With the existing circuit, the fuse is protected, after SW-2 closes during the charging cycle, by the high resistance of the load loop compared to the closed SW-1 resistance. This enables SW-2 to close without regard to system current level or interaction with SW-1.

In the alternate circuit, it is not practical to make the resistance of the load circuit high enough to prevent damaging current from flowing through the fuse after SW-2 closes during the charging cycle, since the coil represents 67 percent of the total charge loop resistance. This requires that SW-2 not be closed until the instant before SW-1 is opened. Obviously, the two switches cannot be open at the same time; therefore, a switch synchronization problem results. This would require that SW-2 be fast acting and capable of closing on appreciable current flow, which is not the requirement in the existing circuit.

The basic existing configuration as presented in Fig. 1b allows complete control of the developed and stored energy by the action of SW-1 only.

A complete schematic diagram of the system with the arc chamber load is shown in Fig. 6. The conductors identified by the heavy lines in Fig. 6 are composed of 12- by 0.25-in. copper bars. Twelve bars, spaced 0.25 in. apart, form the buses except at the coil positive cable connections where six bars are used. The bars from the negative generator terminals through SW-1 and the coil negative cables are divided into three isolated groups of four bars each for forced current distribution in the coil. The load bus approaches the arc chambers from the top and pivots just above the arc chamber and swings up for easy access to the chamber cartridge assembly. Air cylinders are used to apply pressure to the buses at the pivot to ensure a good electrical connection. The bus bars are supported by asbestos ebony slabs or ceramic insulators.

Seventy-two 5000 MCM cables are used to connect the coil terminals to the bus system. The cables have an average length of approximately 38 ft. The coil cable connections along with the bundle arrangements are shown in Fig. 7. It should be remembered that the coil is constructed of two halves so that under any numbered terminal there are three more terminals. Thirty-six cables are required from each set. Notice that segments in each coil physical half are connected to a common point at the set bus connecting point. The coil physical half and the electrical half are not the same. For simplicity, the coil connections to Set No. 2 only are shown in Fig. 7; however, the Set No. 1 connections are identical.

The load bus cables are connected across each pole of the SW-1 breakers and become the current path to the load when the proper switching is initiated. There are a total of one hundred sixty-eight, 1000-MCM cables grouped into bundles of six each, that makeup the load bus circuit. Since the distance from each SW-1 breaker to the load is different, the bundles are grouped so that the circuits from each switch terminal point to the load bus have equal resistance and inductance. The number of cables and bundles from each switch breaker is tabulated below. See Fig. 6 for the breaker numbers.

Break No.	1	2	3	4
Bundles	10	8	6	4
Number of cables per bundle	6	6	6	6
Total number of cables	60	48	36	24
Average cable length, ft	55	45	35	25

The six cables that form each bundle are connected to either side of a breaker so that each cable is alternately positive and negative. The details of the connections to breaker one are shown in Fig. 8.

The cables are regrouped at the load bus end to connect to two negative buses and one positive bus. The bundles are taped together and supported at 18-in. intervals.

The circuit parameters associated with this configuration are summarized in Table I.

TABLE I

SUMMARY OF POWER SUPPLY PARAMETERS WITH ARC CHAMBER LOAD

Symbol	Unit	Value	Description
R	ohms	80×10^{-6}	Charge circuit resistance per set
R	ohms	40×10^{-6}	Equivalent charge circuit resistance both sets
R	ohms	20×10^{-6}	Equivalent resistance of load bus
R	ohms	21×10^{-6}	Typical resistance of fuse
R	ohms	27×10^{-6}	Storage coil equivalent resistance
L	henries	2×10^{-6}	Inductance of bus work charge loop only
L	henries	3.5×10^{-6}	Inductance of load circuit including arc chamber
L	henries	200×10^{-6}	Inductance of one coil half
M	henries	200×10^{-6}	Mutual inductance between coil halves
L	henries	200×10^{-6}	Total equivalent inductance of storage coil

3.2 B-FIELD LOAD

A complete schematic diagram of this load configuration is shown in Fig. 9. The heavy lines shown in the figure are 1 x 6 in. copper buses. The connections from SW-4 to the coils are composed of eighty-four 1000-MCM cables as represented by the single curved lines. The cables are terminated on the switch bus stubs at one end and on 1- by 6-in. copper buses at the load end. The average cable length is approximately 155 ft.

The cables are arranged so that each adjacent cable has opposite polarities. This minimizes inductances and current forces.

The resistance of the load bus from the generator buses to the B-Field coil terminals is 100×10^{-6} ohms per coil or per set.

SECTION IV
CONTROL SYSTEMS

The complete control systems for all major components and auxiliaries are quite elaborate, requiring 54 sheets of control drawings. As an example, there are 450 control relays in the system. A detailed explanation of all these control circuits is beyond the scope of this report. Only the basic control of major components is presented in the following sections.

4.1 M-G SET SPEED CONTROL

The basic block diagram of the M-G set speed control circuits is shown in Fig. 10. If the speed of the set is being increased, the clutch field is energized as denoted by the "C" contacts. The field is energized from an amplidyne that is controlled by two magnetic amplifiers MA-1 and -2. Both amplifiers are stabilized by anti-hunt feedback circuits. The clutch field and drive motor currents are limited by feedback circuits to MA-1. The excitation to the amplidyne is increased until one of the feedback circuits limits the output of MA-2. The speed of each set is monitored, and a feedback signal maintains equal set speeds. The speed reference signal is normally increased to maximum, and all other control is automatic.

If the sets are being stopped, the brake field is energized as denoted by the "B" contacts. A fixed input signal is compared to the set tachometer output. The resulting signal is fed into a curve shaping network which increases excitation as speed decreases. The signal is then fed into the input of A1 which is a transistorized power amplifier. The loop is stabilized by negative feedback from the amplidyne output to the amplifier input.

4.2 GENERATOR VOLTAGE CONTROL

The generator terminal voltages are controlled by varying the excitation to the field coils of each generator. The field coils (two in series per generator) of each set are electrically paralleled and energized from a single d-c exciter. The exciter field is controlled by the output of an amplidyne. The complete block diagram of the control system of one M-G set is shown in Fig. 11. The control of the other M-G set is identical.

Terminal voltage is increased by increasing the input signal to the magnetic amplifier. Feedback circuits FB-2, -3, and -4 are anti-hunt

stabilizing R-C circuits. FB-1 limits the maximum generator field currents to a safe value. The voltage can be raised, lowered, or maintained at a constant value by the action of the manual input voltage. The bias control is normally adjusted to give a zero output with no signal input.

FB-5 has an important effect on the generator voltage. This circuit is connected so that when relay SU closes, the full voltage of the generator is fed back to the amplifier with a polarity that decreases the field excitation. This is commonly referred to as a "suicide" circuit, since the generator output drives its own excitation to zero. The SU relay is fail safe and drops out when the annunciator system detects trouble or when the generators are turned off. Oscillations occur when the suicide circuit is energized; however, these are quickly damped by the action of the system.

4.3 SWITCHING CONTROL

The basic control diagram for SW-1 and -2 is shown in Fig. 12. SW-1 is closed by a manual control signal to start the coil charging process. Transmission occurs through T1 if SW-1 breaker power is "on", the breakers are all open, and the run programming is complete. When all breakers of SW-1 are fully closed, a signal is transmitted to the SW-2 closing coil by the limit switches of SW-1. A 0.2- to 20-sec timer delays the closing of SW-2 which gives approval, through limit switches, to open SW-1 at the proper time. An automatic firing device, which is described in the following section, determines this time. Transmission occurs through T3 if the switch-gear power is "on" and if all breakers are fully closed.

When SW-1 opens, the energy is transferred from the energy storage coil to the load and the run is complete. After a preset time of 60 sec, SW-1 recloses. The timer was started by the initial closing of SW-1.

The initial SW-1 closure also starts a 55-sec timer that times out to open SW-2 when SW-1 recloses. The opening of SW-2 sends a signal through T4 to reopen SW-1, thus completing the switching sequence.

4.4 AUTOMATIC FIRING CONTROL

As described in the preceding section, the function of the automatic firing control (AFC) is to initiate the energy transfer from the storage coil to the load at the described current level. To accomplish this, the AFC circuit continuously samples the current flowing in the energy storage coil.

A search coil, which is mutually coupled to the storage coil, is used to measure the coil current. The output voltage of this search coil is fed into an integrating amplifier.

The operating theory can be developed from the sketch below.

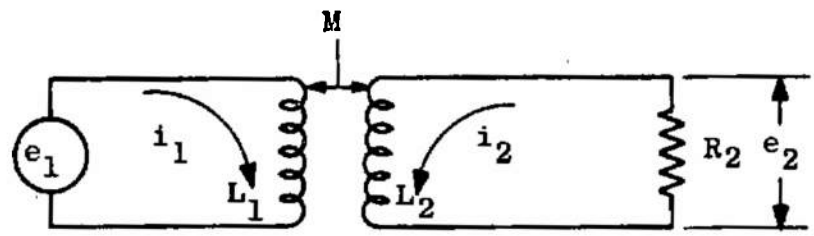

L_1 represents the storage coil, L_2 the search coil, and R_2 the input resistance of the integrating amplifier. The equation of the voltage e_2 is

$$e_2 = R_2 i_2 + L_2 \frac{di_2}{dt} + M \frac{di_1}{dt} \tag{12}$$

Since R_2 is approximately 10^6 ohms (for the amplifier used), the i_2 is extremely small and the $R_2 i_2$ and $L_2 \frac{di2}{dt}$ can be neglected. Then

$$e_2 = M \frac{di_1}{dt} \tag{13}$$

Integration of Eq. (13) yields

$$i_1 = \frac{1}{M} \int e_2 dt \tag{14}$$

Integration of e_2 is accomplished by using an operational amplifier connected as shown below

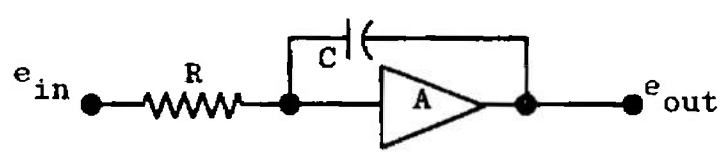

from which

$$e_{out} = \frac{1}{RC} \int e_{in}\, dt \tag{15}$$

From the definitions above, e_{in} is e_2; therefore

$$e_{out} = \frac{M}{RC} \int di_1 \tag{16}$$

Integration must be performed continuously from t_0 to the point of SW-1 opening.

A voltage, e_0, now exits which is proportional to the current in the storage coil. This voltage is compared with a reference voltage, e_r, which is manually adjusted, and has the same range as e_0. These two voltages are compared by a high gain differential amplifier having no feedback and an open loop gain of approximately 15×10^3. The amplifier switches from negative saturation (-70 v) to positive saturation (+70 v) when e_0 rises to within 5 mv of e_r.

The 10-turn potentiometer that controls e_r is the run current setpoint. Both e_r and e_0 have a 0- to 50-v span.

When the differential amplifier switches from negative to positive, a relay is energized through a switching transistor to furnish a normally open contact for the switching circuit. A complete schematic diagram of the automatic firing control circuit is presented in Fig. 13.

The integrator is chopper stabilized to prevent excessive drift while the feedback loop is unclamped. An additional output is provided at the integrator output for recording the system current as measured by the integrator. The system is used with the arc chamber load only.

4.5 GENERATOR GROUND CHECK CIRCUITS

Since the inherent design of the generators requires that the rotor be solid and have a voltage gradient between shaft ends, it is important that all insulation points be monitored just prior to excitation. If certain insulated points should fail during operation, short circuit currents would result which would be limited in magnitude by the resistance of the short. Conceivably, this current could reach several million amperes for very short periods. The resulting damage would no doubt destroy the machine.

Figure 14 presents the insulating details of the generators. Figure 3 should be referred to for insulated areas inside the macine.

The generator shaft, or rotor, is carefully insulated at all points of contact with other parts of the generator or its pedestal. Sheets of insulation are located under each bearing pedestal, and the shaft seals are insulated from the stator frame. Insulated couplings are provided between each generator and the next component. The positive and negative buses are insulated from each other and from the stator frame at the top of the machine. All lube oil, seal oil, and nitrogen piping is insulated at the entrance to the bearing pedestals or generator frames by one of the two methods illustrated in Fig. 14.

Ground shields, or buffer plates, are used between each bearing pedestal and stator frame to detect possible insulation problems at these points.

The basic schematic diagram of a generator insulation check circuit is shown in Fig. 15. The checked points are indicated by capital letters in Fig. 14.

A six-phase star-connected voltage system applies voltage at the six generator check points indicated when the circuit is energized. Currents will flow between any two points which have conductivity between them and will flow to ground if any of the six areas are grounded. The insulation resistance of the six points to ground and to each other is checked in one step. The protective relays (R_2, R_3, etc.) which actually sense the amount of ground fault current are simple plunger-type overcurrent relays which are sensitive to ac or dc. The 5-ohm resistors limit the fault current to a safe value.

When the test relay R1 is not energized, the circuit is disconnected from the six-phase supply and is connected to ground through the normally closed contacts of R1. Under these conditions the insulation system is monitored during the period when the generators are delivering current. Should an insulation failure in the generator place a d-c voltage on any check point, the circuit will detect this and initiate the appropriate action.

The two buses of the generator are checked by individual check circuits which consist of a rectifier and monitoring relays R8 and R9. If either bus is shorted to ground, the relays are energized.

When any of the ground detection relays R2 through R9 are energized, a visible and audible annunciation is initiated which prevents generator excitation, or if the generators are already excited they are automatically de-enegized.

SECTION V
MODE OF OPERATION

5.1 ARC CHAMBER LOAD

The two M-G sets are accelerated to rated speed by energizing the drive motors and applying excitation to the eddy current couplings. The acceleration period requires approximately 18 min. The sets are always brought to full speed regardless of the current level anticipated.

Excitation is then applied to the four acyclic generators, and the terminal voltages are increased to a magnitude sufficient to charge the storage coil to the desired current level. SW-1 is then closed, and the energy is transferred from the flywheels through the generators to the storage coil. The drive motors are de-energized by the closing of SW-1. This prevents motor overloads, and energy contributed by the motors during the charging cycle is negligible. The coil charging time is a function of generator terminal voltage. At the maximum generator voltage (90 v), the charging time to 1×10^6 amp requires 5.5 sec. During the charging period, SW-2 closes connecting the load bus and arc chamber across SW-1.

The current level in the coil is continuously monitored by the automatic firing device and when the current reaches the pre-set level, SW-1 is opened. This places the load in series with the storage coil. For commutating purposes, a delay fuse with a burning time of approximately 50 msec is always required in the arc chamber. This time allows all the SW-1 breakers to fully open and extinguish their arcs before the fuse severs. This is an important aspect of the operation. At this point the fuse opens and the coil energy is delivered to the test gas. Although arc voltage depends on many variables, a typical value is 10,000 v.

After the arc has extinguished, SW-1 recloses, SW-2 opens, and SW-1 opens for the final time leaving the system in the pre-run condition. Both M-G sets are automatically restarted and accelerated to rated speed.

Typical run curves are shown in Figs. 16a and b, based on an actual run of 470,000 amp.

5.2 B-FIELD COIL LOAD

The sets are accelerated to full speed as described above. Excitation is applied to the generators, and terminal voltages are adjusted for a desired current, or field density, level in the coils. This voltage is determined by previous run data. The coil temperature is a parameter that must be considered. SW-4 is then closed and remains closed for one minute. The closing of SW-4 initiates a timing circuit automatically reducing the generator voltages to zero within about 10 sec. SW-4 then opens and the system is reset for another run.

The drive motors remain energized during this operation. Since the maximum system current is about 30 percent the rated value, the speed does not drop enough to cause motor overloads. The energy contributed by the motors is needed to maintain the system speed as high as possible.

5.3 ONE SET OPERATION

Either of the above loads may be supplied with only one M-G set in operation. Bus links are removed from the inactive set, and the generator terminals are grounded, so that it is electrically isolated from the entire system. These points are designated in Fig. 6. The switching remains as previously described.

The system current capability is halved, but the maximum terminal voltage available remains the same. To retain the energy storage capability as with two sets, the terminal voltage of the active set must be doubled for the arc chamber load. The terminal voltage remains at the two-set value for the B-Field load.

5.4 CURRENT TEST

Occasionally it is desirable to operate the system in a closed loop configuration or current test. This is accomplished by proceeding as described in Section 5.1, except here SW-1 remains closed throughout the run period, SW-2 does not close, and current is not established in the load bus. The coil is charged to the current level dictated by the terminal voltages. At the peak of the current curve, the generator voltages are driven to zero, and the stored energy is dissipated in the bus work and coil as heat as the current slowly decays to zero. The highest system voltage is the generator terminal voltage.

If a malfunction occurs during the charging cycle of a pulse run, the system automatically reverts to this configuration.

SECTION VI
THEORY OF OPERATION

To mathematically analyze the power supply system, a simple equivalent, or analog, circuit is needed. The inductance and resistance parameters are straightforward and can be represented as lumped quantities in an analog circuit.

The flywheel-generator energy must be converted to an electrical analog. The flywheel speed decreases as energy is removed, and consequently the generator voltage decreases. As described in Ref. 7, a freely rotating d-c generator with negligible internal inductance and a constant applied field will behave as a capacitor.

The kinetic energy stored in the flywheel is

$$W = \tfrac{1}{2} I\omega^2 \tag{17}$$

where

I = Moment of inertia

ω = Angular velocity

The energy stored in a capacitor is

$$W_c = \tfrac{1}{2} Cv^2 \tag{18}$$

Since $W_c = W$ solving for C yields

$$C = \frac{2W}{v^2} \tag{19}$$

The power supply can now be represented as a simple RLC series circuit.

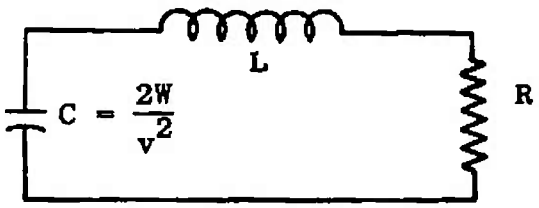

The value of C is inversely proportional to the initial generator terminal voltage. The voltage equation is

$$L \frac{di}{dt} + Ri + \frac{1}{c} \int i dt = 0 \tag{20}$$

using initial conditions of $t = o$, $i = o$, $t = o$, $\frac{i}{c} \int i dt = v_o$, and solving the above equation yields

$$i(t) = \frac{v_o}{bL} \left[e^{-at}\right] \left[\frac{e^{-bt} - e^{bt}}{2}\right] \tag{21}$$

where

$$a = \frac{R}{2L} \tag{22}$$

and

$$b = \sqrt{\frac{R^2}{4L^2} - \frac{1}{Lc}} \tag{23}$$

The equation has three solutions, depending on b.

Case I

If

$$\frac{R^2}{4L^2} > \frac{1}{Lc}$$

then b is a real number. This is the familiar over damped case, and Eq. (21) can be written as

$$i(t) = \frac{v_o}{bL}\left[e^{-at}\right]\left[\mathrm{Sinh}(bt)\right] \tag{24}$$

Case II

If

$$\frac{R_2}{4L^2} < \frac{1}{Lc}$$

then b is an imaginary number. This is the oscillatory or under damped case. Equation (21) now becomes

$$i(t) = \frac{v_o}{|b|L}\left[e^{-at}\right] - \mathrm{Sin}\,(|b|t)\Big] \tag{25}$$

Case III

If

$$\frac{R_2}{4L^2} = \frac{1}{L_c},\ b = 0$$

and the system is critically damped. Equation (21) becomes

$$i(t) = \frac{v_o t}{L}\left[e^{-at}\right] \tag{26}$$

Equations (24) and (25) are plotted in Fig. 17, with system current as a function of time, for several values of v_o. Notice that damping decreases as v_o increases.

Substituting $c = \frac{2W}{v_o^2}$ into the equation for b yields

$$b = \sqrt{\frac{R^2}{4L^2} - \frac{v_o^2}{L(2\omega)}} \tag{27}$$

The quantity b is a damping constant and is plotted as a function of v_o in Fig. 18. Critical damping occurs at a v_o of 52 v. All higher voltages result in an oscillatory condition. The system is not normally subjected to these oscillations, since the generator voltages are driven to zero near the peak current. This is an important function of the suicide circuits. If the generator remained excited oscillations would occur, limited only by the system charge loop resistance. These oscillations could cause severe damage to the acyclic generators.

A close examination of Eq. (27) indicates that it is desirable to design the system with low critical damping, since the $R^2/4L^2$ term must be kept as low as possible for efficient energy storage.

Equation (20) can be restated as follows:

$$LC \frac{d^2W}{dt^2} + RC \frac{dv}{dt} + V = 0 \tag{28}$$

The solution of this equation yields the voltage across the capacitor (generator) as a function of time and initial generator voltage, v_o:

$$v(t) = v_o \left[\frac{\left(\frac{R}{L} - d\right)\epsilon^{-dt} - \left(\frac{R}{L} - B\right)\epsilon^{-Bt}}{B - d} \right] \tag{29}$$

where

$$d = \frac{R}{2L} + b$$

$$B = \frac{R}{2L} - b$$

$$b = \frac{R^1}{4L^2} = \frac{1}{LC}$$

Equation (29) is plotted in Fig. 19 with generator terminal voltage as a function time. Also plotted is a curve of time to reach maximum system current for each generator initial voltage setting.

Results from the above analysis compare favorably with actual recorded data. It must be remembered that the automatic firing device always initiates an energy transfer before peak current conditions are reached.

A similar analysis can be made for the B-Field load. The analog circuit for one set becomes:

Where

$R = 631$ un

$L = 530$ uh

$C = \frac{2W}{v^2}$

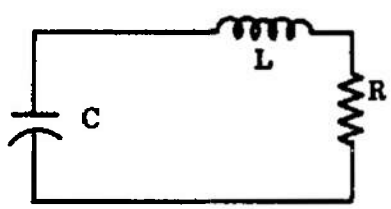

Since b remains real

$$\left(\frac{R^2}{4L^2} > \frac{1}{Lc}\right)$$

Eq. (24) can be used for all conditions. These results are plotted, along with the generator voltage as a function of time, in Figs. 20 and 21.

SECTION VII
ENERGY STORAGE AND SYSTEM CAPABILITIES

The large amount of rotational or kinetic energy stored in each M-G set has the obvious advantage of eliminating large motors which would be required if the energy conversion is made directly from mechanical to electrical energy during the 5- to 10-sec pulse duration. This allows the use of 1000-hp motors, otherwise 50,000-hp units would be required with a 10-sec duty rating. The time required for acceleration is not critical.

The energy required to bring both sets from zero to rated speed is

$$W = 2 \times 1000 \text{ hp} \times 18 \times 60 \text{ sec}$$

$$= 216 \times 10^4 \text{ hp-sec} \tag{30}$$

or

$$W = 216 \times 10^4 \text{ hp-sec} \times 746 \text{ w/hp}$$

$$= 1600 + 10^6 \text{ w-sec}$$

$$= 1600 \times 10^6 \text{ joules} \tag{31}$$

The total kinetic energy stored in each flywheel is

$$W = 410{,}000 \text{ hp-sec} \times 746 \text{ w/hp}$$

$$= 306 \times 10^6 \text{ joules} \tag{32}$$

The kinetic energy stored in other rotational components (shafts, generator rotors, etc.) is approximately 36×10^6 joules. The total stored energy in both sets is

$$W_T = 306 \times 10^6 \times 2 + 2 \times 36 \times 10^6$$

$$= 684 \times 10^6 \text{ joules} \tag{33}$$

During the system acceleration period, 936×10^6 joules are consumed by friction and windage losses. Approximately 650,000 w of power are required to overcome these losses and maintain the system at a rated speed.

At the rated system current of 1×10^6 amp, the total energy stored in the coil is

$$W_c = \tfrac{1}{2} LI^2$$

$$= \tfrac{1}{2} (200 \times 10^{-6}) (1 \times 10^{12})$$

$$= 100 \times 10^6 \text{ joules} \tag{34}$$

The sets cannot drop below 1100 rpm during generator excitation periods because of NaK confinement problems. The energy stored in each set is

$$W = \frac{J_m \omega^2}{2} \times 1.356 \tag{35}$$

Where

ω = radians/sec

W = joules

J_M = lb-ft^2

To find J_M for the entire rotating assembly

$$J_M = \frac{2W}{\omega^2 \times 1.356}$$

$$J_M = \frac{(2)\ (342)}{(176)^2 \times 1.356} \times 10^6$$

$$J_M = 16.2 \times 10^3 \text{ lb-ft}^2 \tag{36}$$

Assuming the set drops to 1100 rpm, the maximum kinetic energy available per set is

$$W_M = 342 \times 10^6 - W_2$$

$$W_2 = \frac{(16.2 \times 10^3)\ (110)^2}{2} \times 1.356$$

$$W_2 = 134 \times 10^6 \text{ joules}$$

$$W_M = (342 - 134) \times 10^6$$

$$= 208 \times 10^6 \text{ joules} \tag{37}$$

As previously mentioned, the generators are approximately 98 percent efficient. Since 208 x 10^6 joules are available from each set (kinetic) and since only 58 x 10^6 joules are stored in the coil per set, the greater part of the kinetic energy is dissipated in the buses and coil as joulean heat.

Disregarding the generator efficiencies, the energy stored in the drive as a function of time can be expressed as

$$W(t) = W_{max} - W_d - W_s \tag{38}$$

Where:

W_{max} = Maximum kinetic energy stored

W_d = Energy dissapated in system

W_s = Energy stored in storage coil

or

$$J\omega^2(t) = 1.368 \times 10^9 - LI^2 - 2I^4 R t \tag{39}$$

Equation (39) is plotted in Fig. 22, for several values of v_o, as a function of time. This yields system speed versus time for any given initial generator terminal voltage.

Since the kinetic energy stored decreases as the square of the speed, the system speed decreases very rapidly below 1100 rpm with the high terminal voltages.

A similar analysis for the B-Field operation yields a speed versus time curve as shown in Fig. 23.

SECTION VIII
OPERATIONAL PROBLEMS

For a complex system utilizing unique equipment, the power supply has proven itself to be well designed and reliable. Several major problem areas have developed through the five years of operation and are discussed, in no particular order, in the following sections.

8.1 EXCESSIVE STORAGE COIL MOVEMENT

As indicated in Sections 2.5 and 3.1, the current supplied to the storage coil enters the coil at 36 sets of terminals distributed around the coil. These currents all flow in a clockwise direction around the coil such that the resultant forces compress the coil and tend to enlarge the diameter. The magnitude of these forces can be calculated for all values of current.

The compressive forces between the two coil halves can be easily calculated since the two halves have the same vertical axis and dimensions. The following parameters will be used as shown.

For the storage coil

$d = 93.5$ in.

$b = 27$ in.

$t = 38.5$ in.

$g = 2.5$ in.

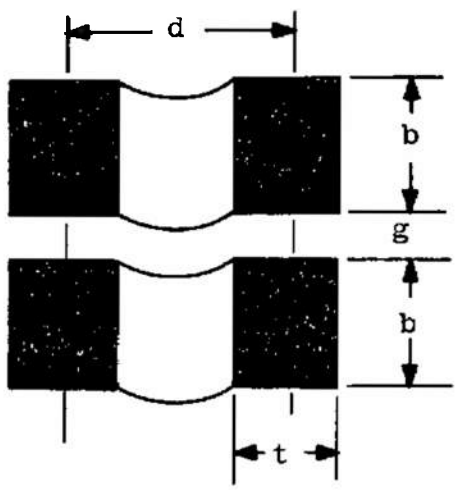

The ratio of g/d is:

$$g/d = \frac{2.5}{93.5}$$
$$= 0.0268 \tag{40}$$

$$b/d = \frac{27}{93.5}$$
$$= 0.29 \tag{41}$$

From Ref. 8, this gives a force of 250×10^{-9} lb/amp turn. An equation for total force can be written as follows:

$$F_T = (250 \times 10^{-9} \text{ lb/A-T}) (I_1 \; I_2 \; N^2) \tag{42}$$

Since $I_1 = I_2$ and there are effectively 12 turns in each half, the general equation becomes

$$F_T = 90 \times 10^{-7} \; I_T^2 \tag{43}$$

where $I_T = I_1 + I_2$ and I_T is the total system current. At 1×10^6 amp this force is

$$F_T = 90 \times 10^{-7} \times 1 \times 10^{12}$$
$$= 9 \times 10^6 \text{ lb} \tag{44}$$

At the normal operating level of 400,000 amp, the force becomes

$$F_T = 90 \times 10^{-7} \times 16 \times 10^{10}$$
$$= 1.44 \times 10^6 \text{ lb} \tag{45}$$

The forces tending to enlarge the coil can be calculated from methods developed in Ref. 9. The axial magnetic field of an air core coil behaves as a two-dimensional gas that exerts a radial pressure mathematically identical with the magnetic energy density.

In general

$$P_M = \frac{B^2}{2M_0} \text{newtons/m}^2 \tag{46}$$

M_0 for free space equals 4×10^7 and converting the equation to pounds per square inch yields

$$P_M = 57.5 \; B^2 \text{ lb/in}^2 \tag{47}$$

where B = webers/m^2. The field density inside the coil air core is approximately 80,000 guasses, or 8 webers at the rated current of 1×10^6 amp.

Therefore

$$P_M = 57.5\ (8^2)$$

$$= 3680 \text{ psi} \tag{48}$$

The inside area of either coil half is approximately 5100 in.^{2}. The maximum force at any cross-sectional area of either coil half is

$$F_M = \frac{3.68 \times 10^3 \times 5.1 \times 10^3}{2}$$

$$= 9.4 \times 10^6 \text{ lb} \tag{49}$$

The above forces are direct results of the currents flowing in parallel paths through the coil. The coil can successfully withstand these forces during current buildup. The copper is strong enough to withstand the radial forces, and the compressive load is carried by spacers between layers. Naturally the coil is deflected by these forces. The coil deflection, from its static position, can be as much as 0.6 in. at approximately 500,000 amp. Then assuming that the coil returns to its original position, and amount of mechanical energy equal to the compressive energy must be stored in the coil. Since this mechanical energy is released within 10 to 20 msec, the movement back to the static zero causes an overshoot and the coil top layers are propelled away from the coil surface. This not only damages insulation but usually results in excessive maintenance since the turns, once forced out of position, will not return to their normal position. The radial stresses cause no problem since because of the design of the coil, the inside turns are firmly secured.

The rebound problem is further aggravated by one M-G set operation and by circulating currents through the coil after energy release.

During periods when one M-G set is inactive, half the coil turns are inactive. The current distribution and consequently the forces are altered. The current pattern in the coil becomes more elliptical and the radial forces tend to force the active current carrying turns into a circle.

The compressive forces become unevenly distributed through the coil cross-section. Portions of the coil are then compressed, and portions remain at the static position.

One set operation is usually necessary for long periods when either set is down for a generator overhaul or other equipment failures. Limitations on system current to prevent coil damage decrease the usefulness of the supply, especially if the arc chamber is the load. To prevent this, equalizing buses are being installed, with manual disconnect devices, so that coil current distribution is maintained within

10 percent of the two-set value. This is accomplished by connecting buses from the two positive and negative buses of each set to the corresponding buses of the other set.

Even with two-set operation after the coil energy is released, the generators are still in the suicide cycle and may have opposite polarities on a voltage swing. If this occurs a current results that flows (see Fig. 2) through each set of generators and through the coil halves in opposite directions. The forces resulting from this current are such that the coil halves tend to be forced apart. This condition can be controlled by keeping the generator control circuits adjusted such that the oscillations are as nearly identical as possible.

Two methods have been used to contain the coil overshoot during energy release. When this first became a problem, the top of the coil was covered with 30,000 lb of sandbags. This method was satisfactory in containing the top layers; however, the constantly leaking sand caused problems with the coil insulation.

To accomplish the same result, spring loaded hold-down structures were installed. These consist basically of two pieces of wood on the top and bottom of the coil tied together on each side by stainless steel rods and phosphor-bronze springs. The springs are in compression and are adjusted such that the coil is preloaded to about 20,000 lb. However when the springs are compressed another 1/2 in., the force becomes in excess of 50,000 lb.

Eighteen such structures are evenly spaced around the coil. The load is evenly distributed by plywood sheets and rubber matting located under the hold-down timbers.

8.2 GENERATOR INSULATION FAILURES

A generator insulation approval is the critical step in initiating the generators. This approval comes from the ground check circuits previously discussed. The failure can be classified into two cases, namely a failure inside the machine and an external failure. The remedial action is quite different for each case.

When an internal failure occurs, there are only two alternatives. The failure can be disregarded or the machine must be opened, with N_2 atmosphere maintained and the trouble eliminated. The former is dangerous and could result in extreme damage to that generator or its entire drive

unit. The latter is difficult, since the machine must be entered through small access ports on either side of the machine. Plastic bags are used around the ports, and all work is done through gloves tapped into the bag. It is imperative that no air be allowed to enter the machine.

The internal insulation is not as simple as indicated in Fig. 3. The insulation barrier is made up of sheet insulation, insulated bolts, and epoxy compounds. There are numerous paths from either collector and its associated bus to ground or the other collector. Major problems have developed when a small amount of NaK leaks into the machine. This NaK, over a long period of time, breaks down into small granules, similar to fine metal filings, caused by the circulating action of the nitrogen atmosphere. This residue then coats or piles up on insulated points throughout the machine. These particles are highly conductive and cause insulation failures.

The NaK leakage can be caused by small piping leaks, (which necessitated one generator overhaul), plugged collector drains (which were responsible for another overhaul), and forces acting on the NaK caused by current flowing through it. Only two of the four acyclic generators have required overhaul in the first five years of operation.

Once NaK is discovered in a machine and an insulation check has failed, the trouble can occasionally be cleared by entering the machine, as described above, and blowing the powdered NaK off insulated surfaces using a nitrogen jet. If this fails, or if the leak intensifies, then a generator overhaul is inevitable.

On the second of the two machines overhauled, extensive insulation was added at critical points throughout the machine. Special attention was given to insulated bolt heads, which seem to be prone to trouble, by coating the entire head and/or nut with an epoxy compound. A similar program is planned for the other generators when an overhaul is accomplished.

Insulation failures outside the machine occur frequently and are usually the result of dirty surfaces. Occasionally a general cleanup on all exterior insulating surfaces (see Fig. 15) is required. These failures present no serious difficulties.

8.3 SWITCHING

SW-1 and 2 are instrumental in the operating cycle when the arc chamber is the load. Since SW-2 closes and opens on zero current and its operation is routine, only minor problems have been encountered.

SW-1 provides all the dynamic switching in the system. It closes with generator voltage already applied. Because of the inductive load, current cannot instantaneously flow, and the switch is fully closed before appreciable current flows. When the energy stored in the coil is transferred to the load, SW-1 must open with as much as 1×10^6 amp flowing and commutate this current to the load circuit before the arc-chamber fuse severs (approximately 30 to 60 msec). As indicated in Fig. 5, breaker arc extinction occurs in less than 20 msec for the rated current case. When the contacts rebound, the separation becomes approximately 1 in. after 60 msec.

The energy lost or dissipated in SW-1 can be calculated for the 1×10^6 amp level using the following equivalent circuit where R is the total load bus resistance = 40×10^6 ohms and L is the total load bus inductance = 3.5×10^{-6} henries

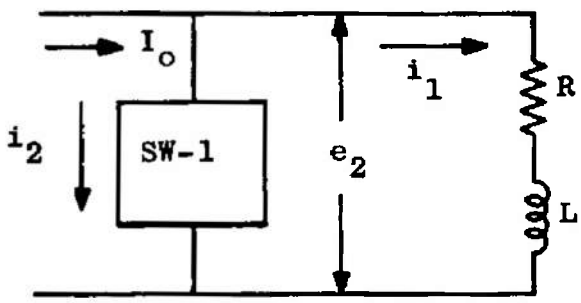

$$e_2 = \frac{di_1}{dt} + i_1 R \tag{50}$$

$$i_2 = I_0 - i_1 \tag{51}$$

$$P_2 = i_2 e_2 = \left[L \frac{di_1}{dt} + i_1 R\right] (I_0 - i_1) \tag{52}$$

integrating term by term from o to t_o yields an energy equation

$$\int_0^{t_0} P_2 \, dt = L I_0 \int_0^{I_1} di_1 - L \int_0^{I_1} i_1 d_1$$

$$+ I_0 R \int_0^{t_0} i_1 dt - R \int_0^{t_0} i_1^2 dt \tag{53}$$

It is reasonable to assume that i_1 is a linear function of time

$$i_1 = \frac{I_0}{t_0} (t) \tag{54}$$

$$W = \tfrac{1}{2} I_0^2 \left[L + 1/3 \, R t_0\right] \tag{55}$$

if R = 0

$$W = \tfrac{1}{2} I_0^2 L = 1.75 \times 10^6 \text{ joules} \tag{56}$$

if $t_o = 0.01$ sec which is the average commutating time

$$W = 1.82 \times 10^6 \text{ joules}$$

The resistance of the load then contributes only 72,000 joules of the 1.82×10^6 joules dissipated in the switch.

The voltage e_2 has been measured and ranges from 300 to 450 v depending on the switch extinguishing time. The I_oR voltage is insignificant compared to the $L \frac{di}{dt}$ term.

This energy loss can also be calculated by another method. The minimum energy loss in switching is

$$W = W_o \frac{L_L}{L_o} \tag{55A}$$

provided $L_L << L_o$. The initial energy stored in the coil is W_o, L_L is the load inductance, and L_o is the storage coil inductance. If load resistance is included, the energy becomes greater as indicated by Eq. (55).

The above energy causes some burning on each run, and frequent cleaning of the breakers is required to keep the insulation power factor below about 20 percent.

If, for any reason, any of the 12 poles of the switch fail to clear, it is evident that the full energy stored in the coil will be dissipated in that breaker.

On every run, there must be some assurance that a load fuse does exist in the arc chamber. If the fuse was broken or completely left out, the switches would not clear. To detect the presence of a fuse, a magnetically actuated switch is installed near the load bus. This switch closes when SW-2 closes provided about 180,000 amp are flowing through the load circuit. Approval is then complete for initiation of the energy transfer.

8.4 DETERMINATION OF SYSTEM CURRENT

As originally designed, the only available current measurements were from bus search coils and the 20-ft bus section which served as calibrated shunts (see Section 2.10). These systems did not provide the accuracy desired in determining the current actually delivered to the load. This deficiency was caused partially by the type of equipment used. However, the inability to quickly and accurately calibrate the system was the primary problem.

This problem led to an eventual calibration program and the design and installation of the AFC previously described.

Two basic methods were used for the calibration. The primary method was the search coil as previously described for the AFC circuit. To verify this value, the voltage drops across each segment of the storage coil were measured. Measurement of the individual segment resisances just prior to the test run made it necessary to calculate only the current through each segment and sum these values to find the total system current. These two methods agreed within 2-percent.

Before the use of the AFC, the current requested by tunnel personnel could not be consistently delivered. The mode of operation at this time was to set the SW-2 timer at a value that commutated the energy to the load near the peak system current. Many things contributed to this discrepancy. Temperature, inaccuracy in setting generator voltages, and reliability of past data were all responsible.

As discussed in Sections 4.4 and 5.1, the AFC now provides accuracies within 3 percent of the requested load current.

SECTION IX
CONCLUDING REMARKS

The power supply is capable of delivering desired currents to the two loads described. Modifications discussed have increased the usefulness of the system.

The system has been pulsed to the rated current of 1×10^6 amp; however, this has always been in the closed loop configuration. With the present tunnel arc-chamber, it is not possible to discharge the coil at current levels exceeding 525,000 amp.

When a full capacity arc chamber becomes available, the system will be required to furnish energy up to design values. How often the system will be utilized at or near its maximum capability cannot be predicted.

Two possible problem areas are anticipated at this level. The storage coil has already been damaged to some extent by past operation. The insulation has aged and seems to be more susceptible to failure. The coil, during discharge, will be subjected to forces four times the highest previous forces. How this sudden release of energy will affect the coil is not known.

SW-1, except during the initial system checkout, has never interrupted currents greater than 525,000 amp; nor has it been necessary for the switches to withstand the 20-kv peak voltages that may be encountered

The system is presently being modified, in conjunction with the equalizing buses, to supply a terminal voltage of 180 v for use with the B-Field load only. In this configuration, all generators will be in series with an output of +90 v and -90 v. The midpoint of the generators will be grounded.

REFERENCES

1. Ball, H. W. "Calibration of 100-inch Hypervelocity Tunnel." AEDC-TDR-63-46 (AD298279), March 1963.
2. Fillers, A. H., Jr. "Inductive Power Supply for a Hotshot Type Tunnel." AEDC-TDR-62-137 (AD278158), July 1962.
3. General Electric Co. "Acyclic Generator." GED-4471.
4. Cooney, R. W., Harvey, L. M., and Horton, M. D. "Considerations in Applying Acyclic Generators for Pulse-Duty in Magnet Power Supplies." First International Symposium on Magnet Technology, Stanford University, September 10, 1965.
5. Harvey, L. W. and Burnett, J. R. "A New Look at Acyclic Generation." General Electric Co., GEA-7265, April 4, 1963.
6. Burk, M. K. "Acyclic Generator - Key to Increased Application Flexibility." General Electric Co., GER-2273, May 5, 1965.
7. Boyajian, Aram., "The D-C Motor as a Capacitor." Electrical Engineering, Vol. 72, No. 2, February 1953, pp. 154-155.
8. Dwight, Herbert B. "Electrical Coils and Conductors." New York, McGraw-Hill Book Co., Inc., 1945, p. 305.
9. Furth, H. P., Levine, M. A., and Waniek, R. W. "Production and Use of High Transient Magnetic Field, II." Review of Scientific Instruments, Vol. 28, No. 11, November 1957, pp. 949.

APPENDIX
ILLUSTRATIONS

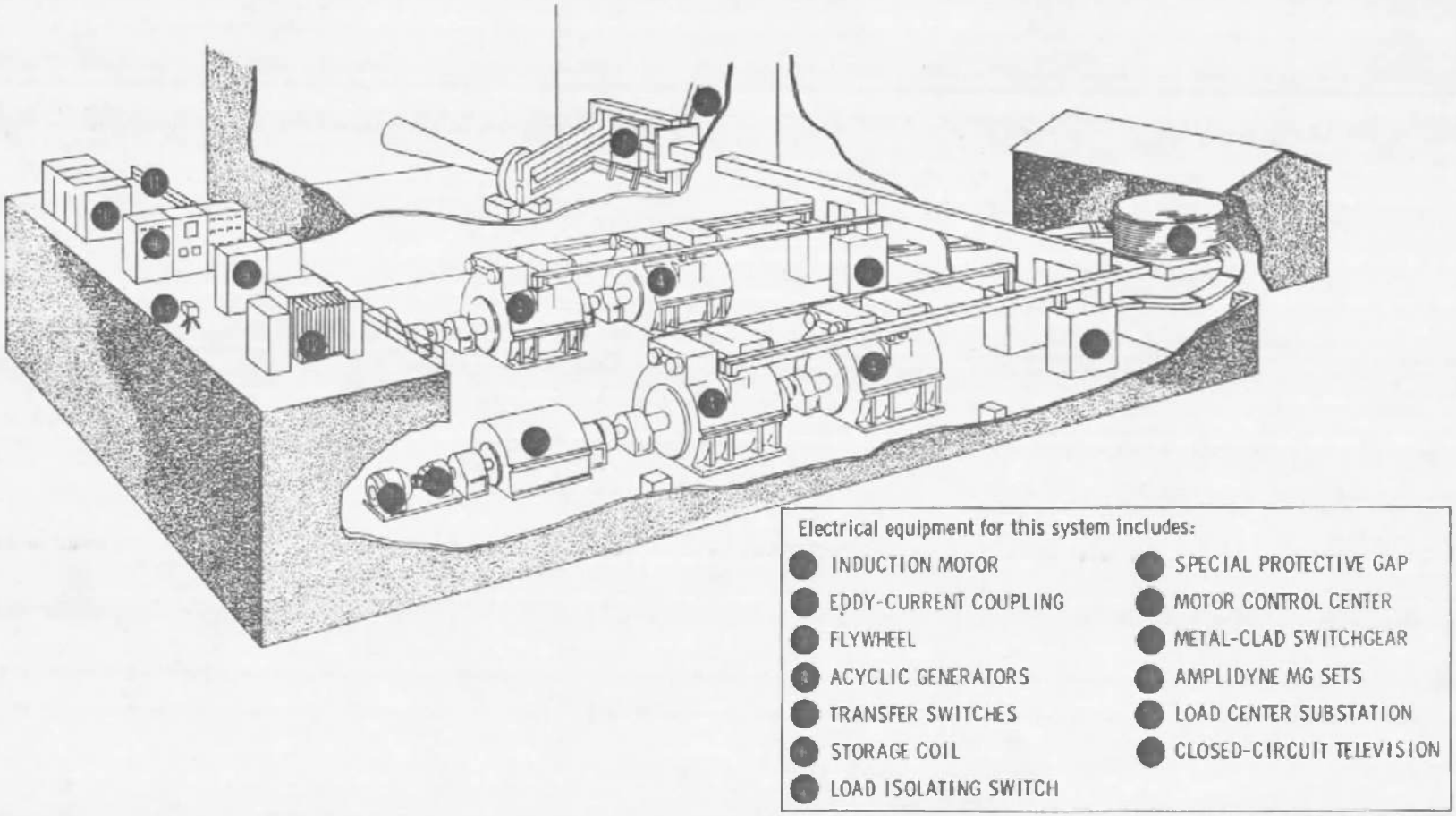

a. Cutaway View

Fig. 1 Power Supply System Configuration

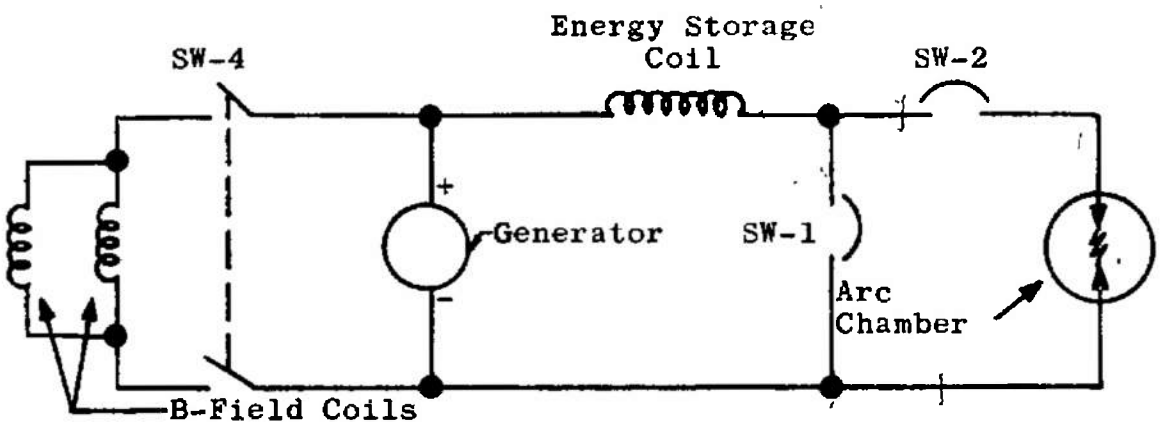

Simplified Diagram of Existing
Power Supply System

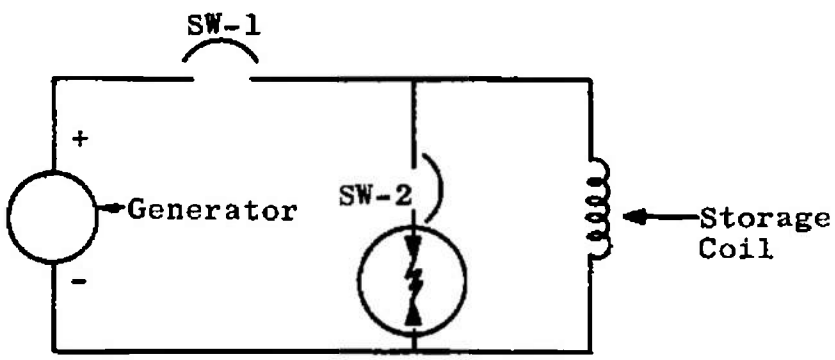

Simplified Diagram of an
Alternate Power Supply System

b. Existing and Alternate Systems

Fig. 1 Concluded

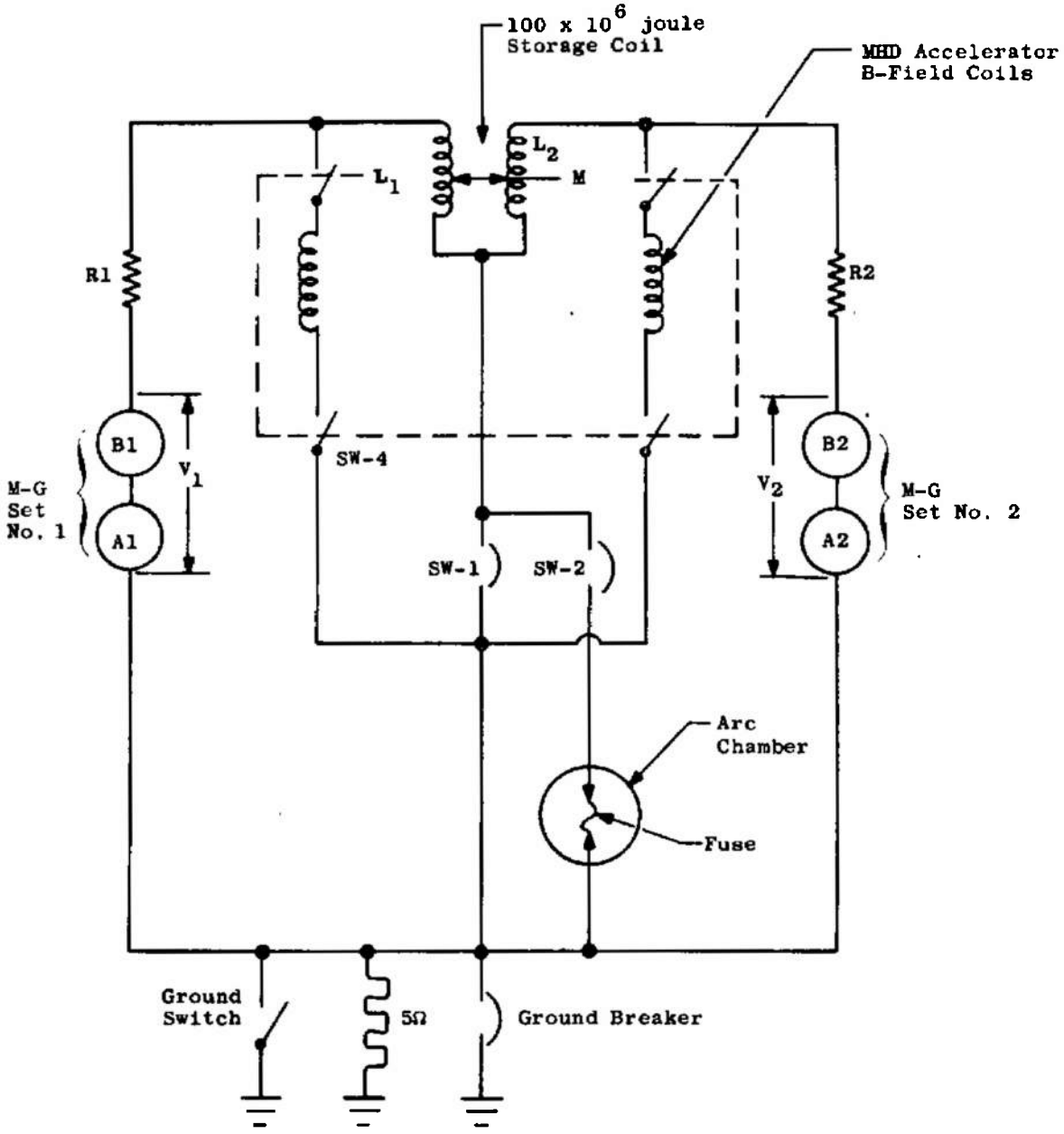

Fig. 2 Basic Schematic Diagram

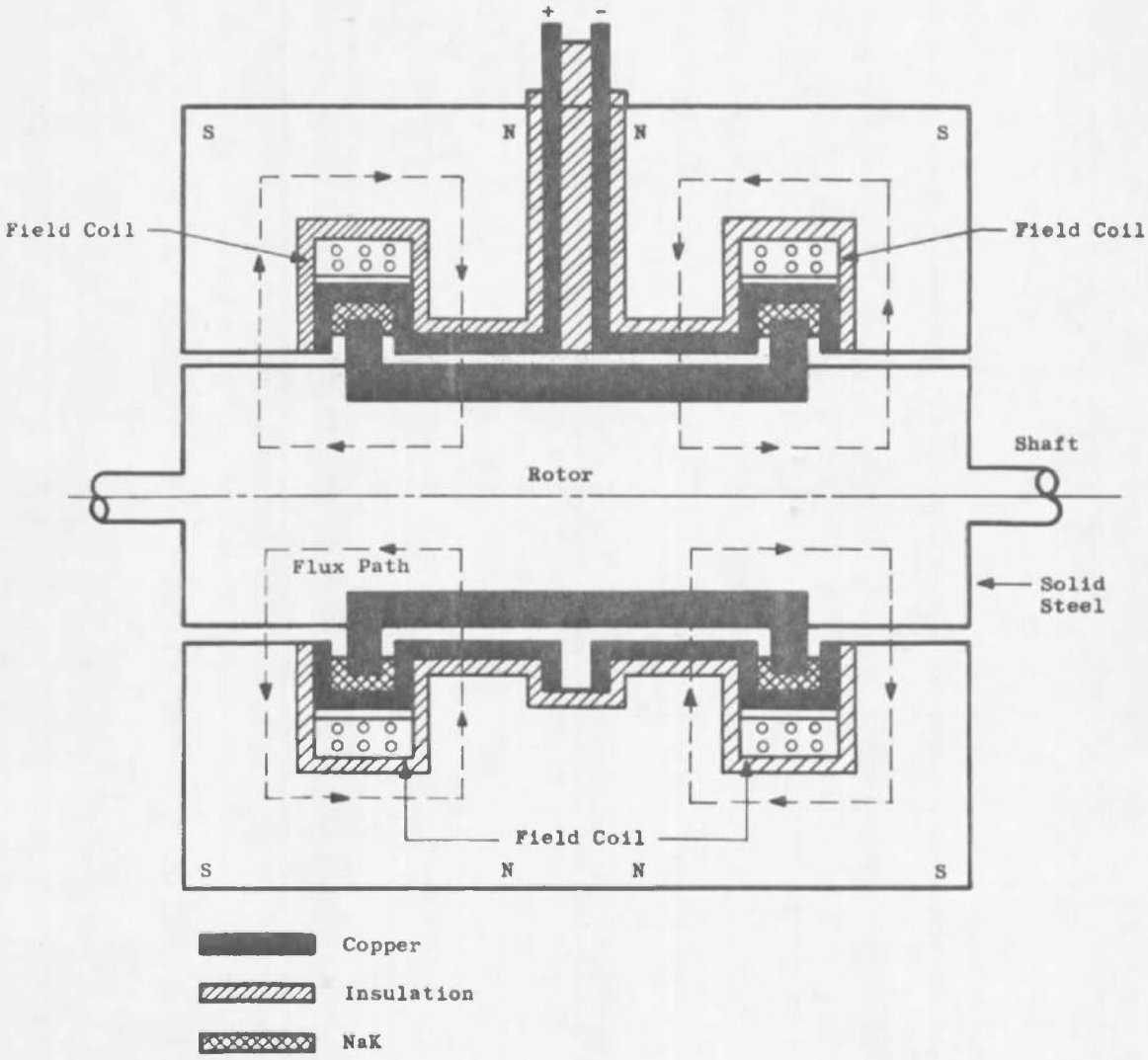

Fig. 3 Simplified Sketch of Acyclic Generators

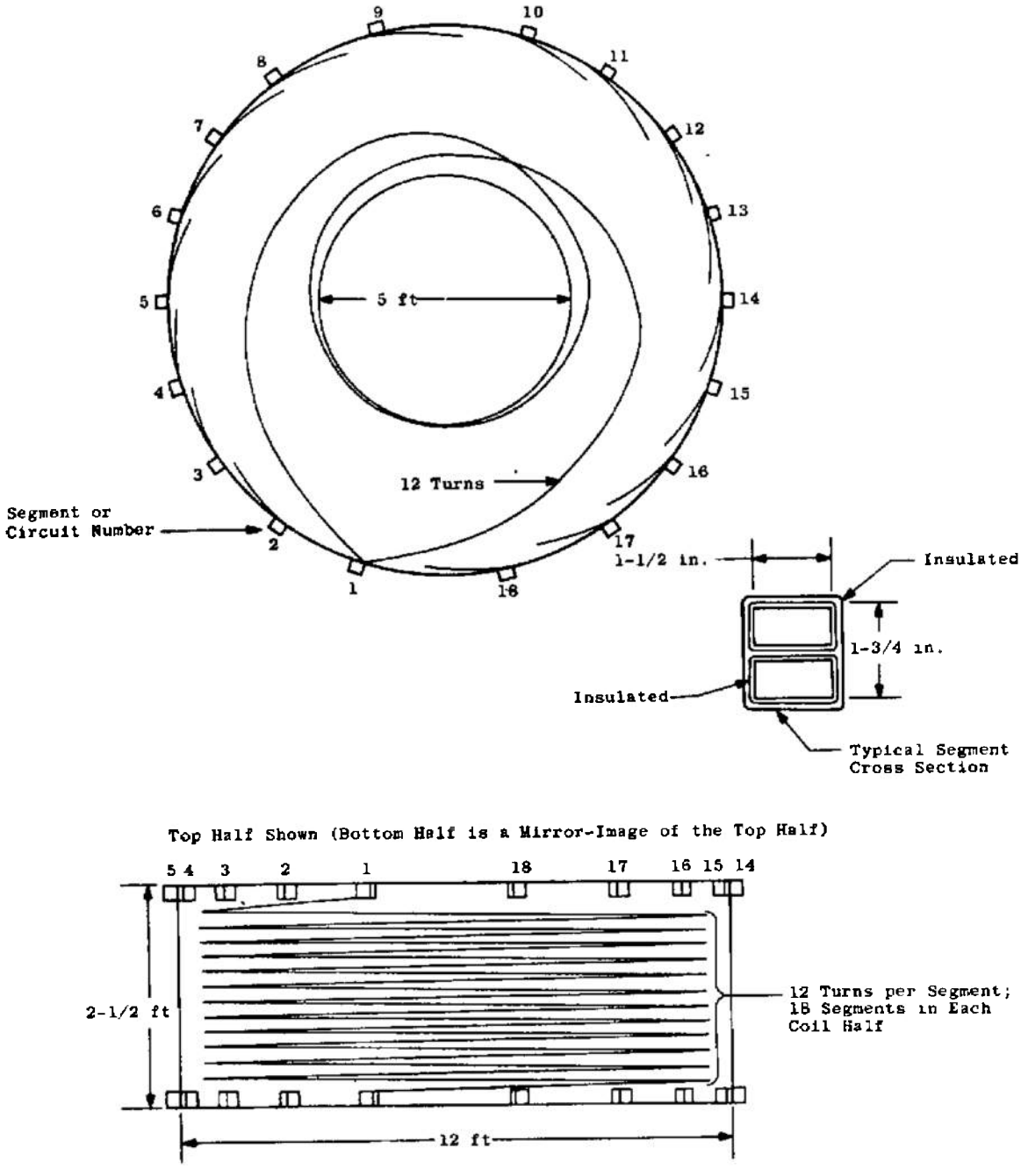

Fig. 4 Basic Energy Storage Coil Construction

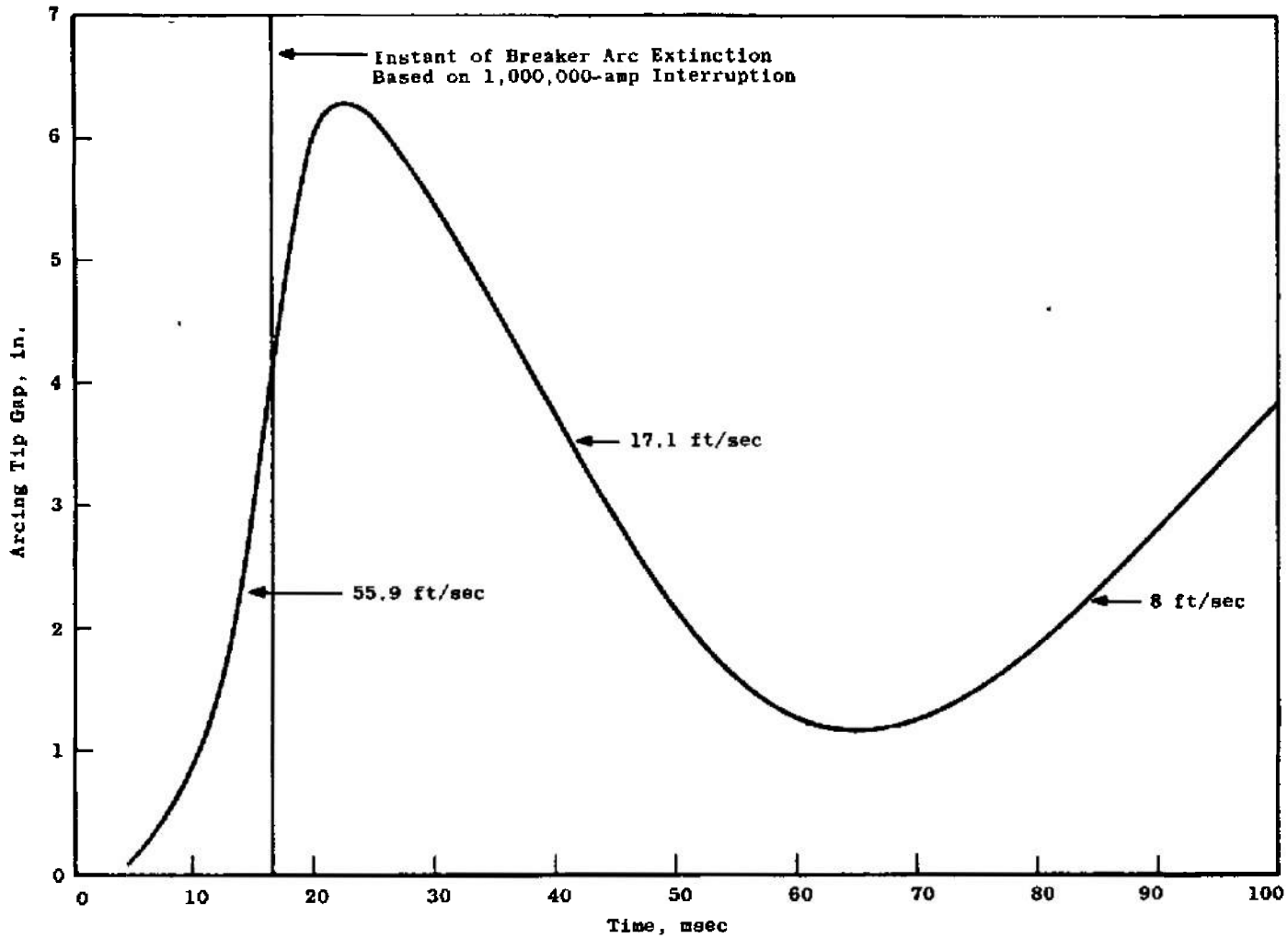

Fig. 5 SW-1 Opening Characteristics

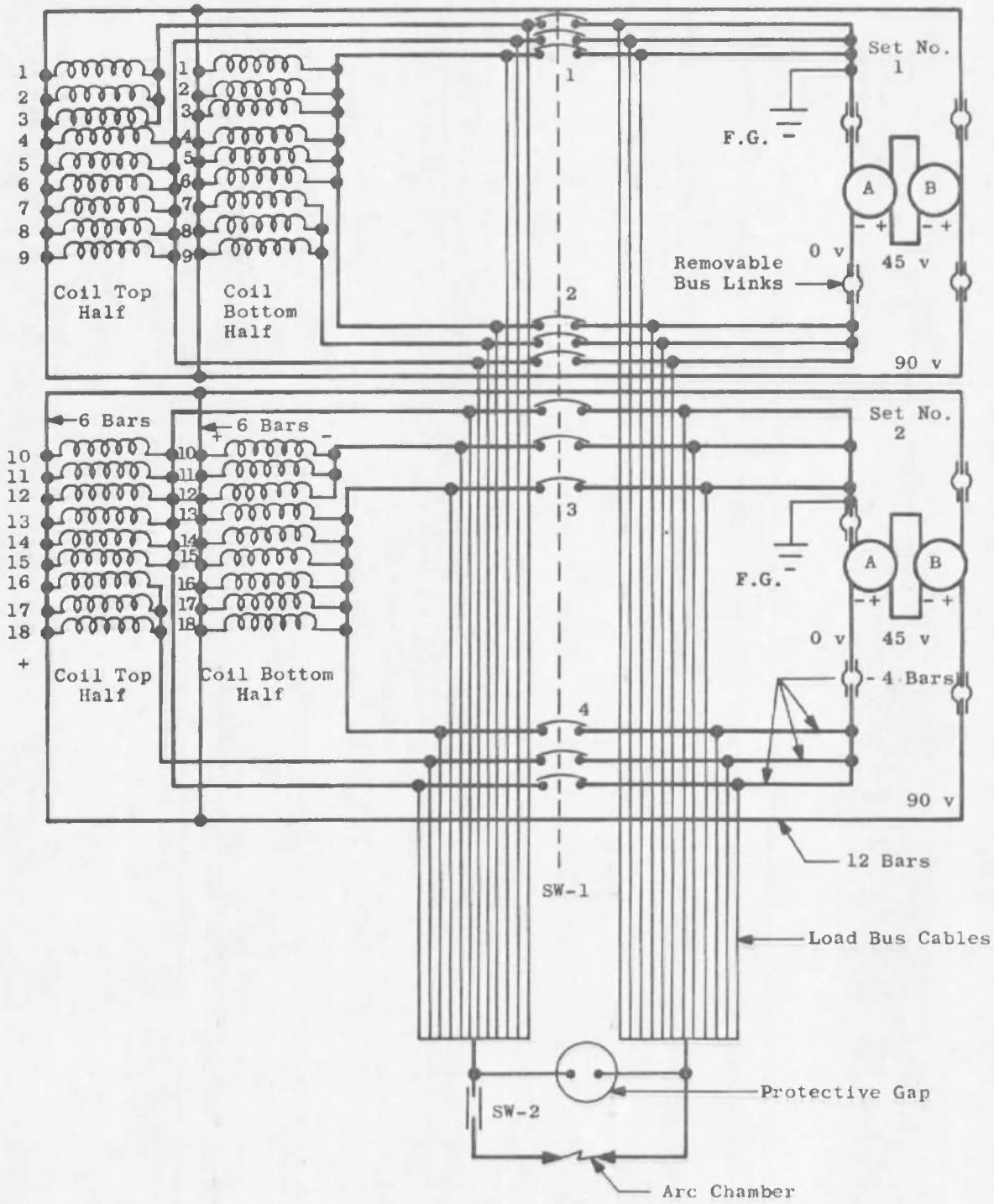

Fig. 6 Complete Power Supply Schematic Diagram

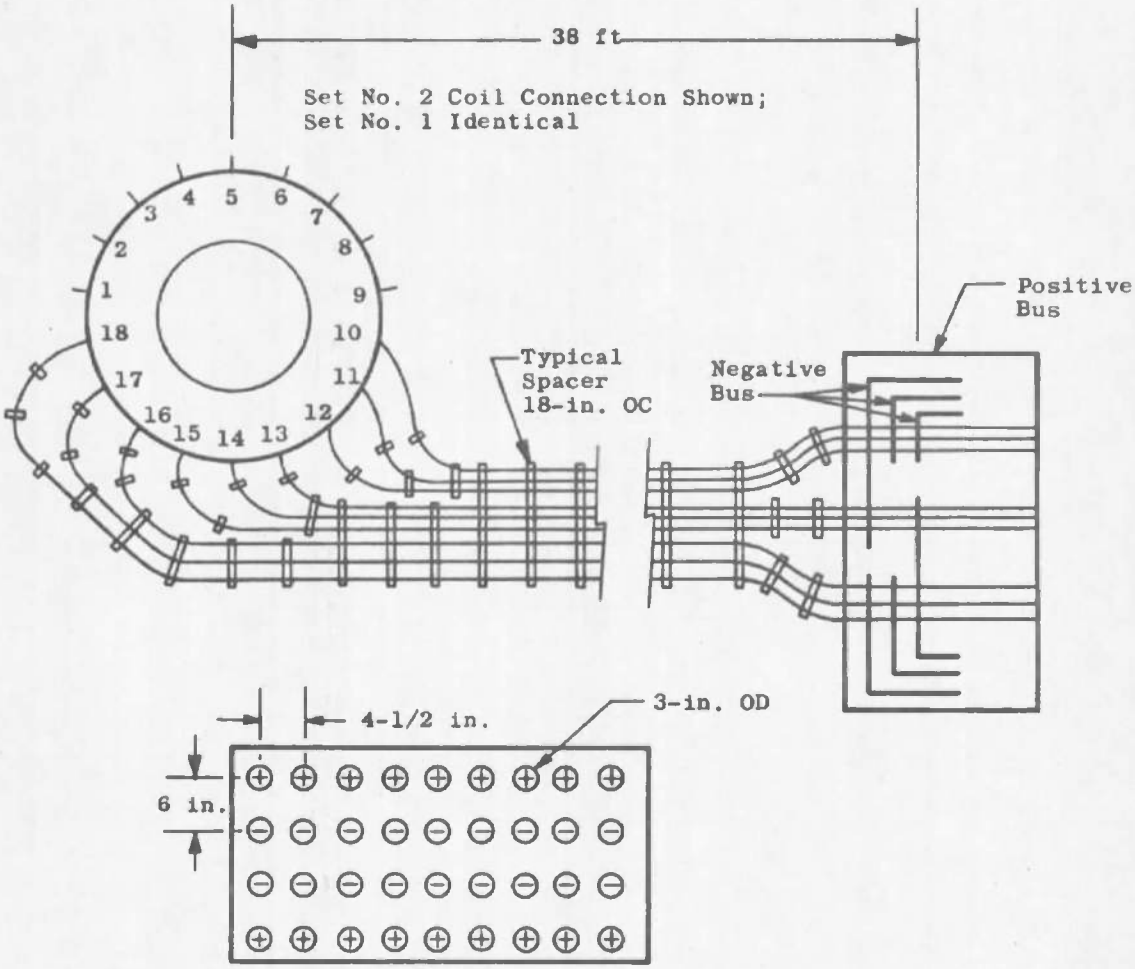

Typical Cable Bundle
Cross Section

Fig. 7 Coil Cable Connecting Details

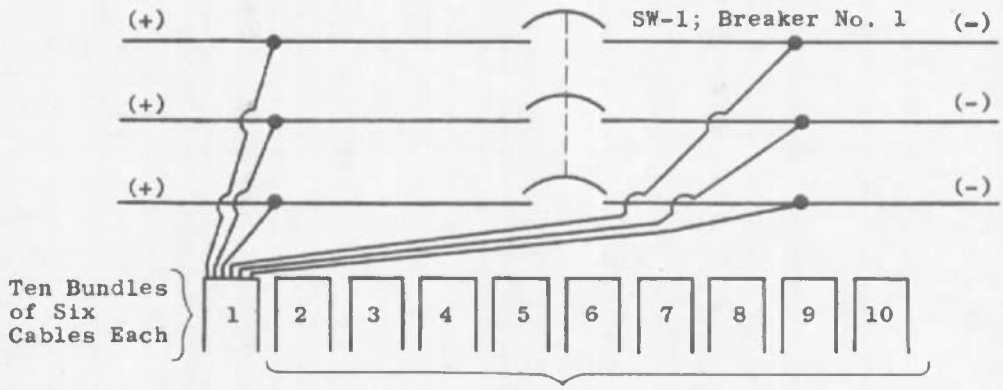

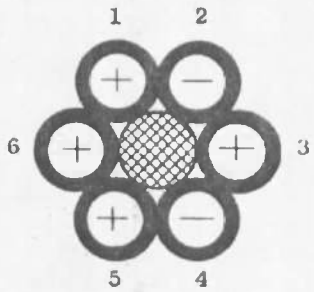

Cable Bundle Details
Typical for All Bundles

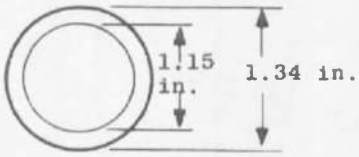

Cable Dimensions

Fig. 8 Typical Load Bus Cable Connections and Details

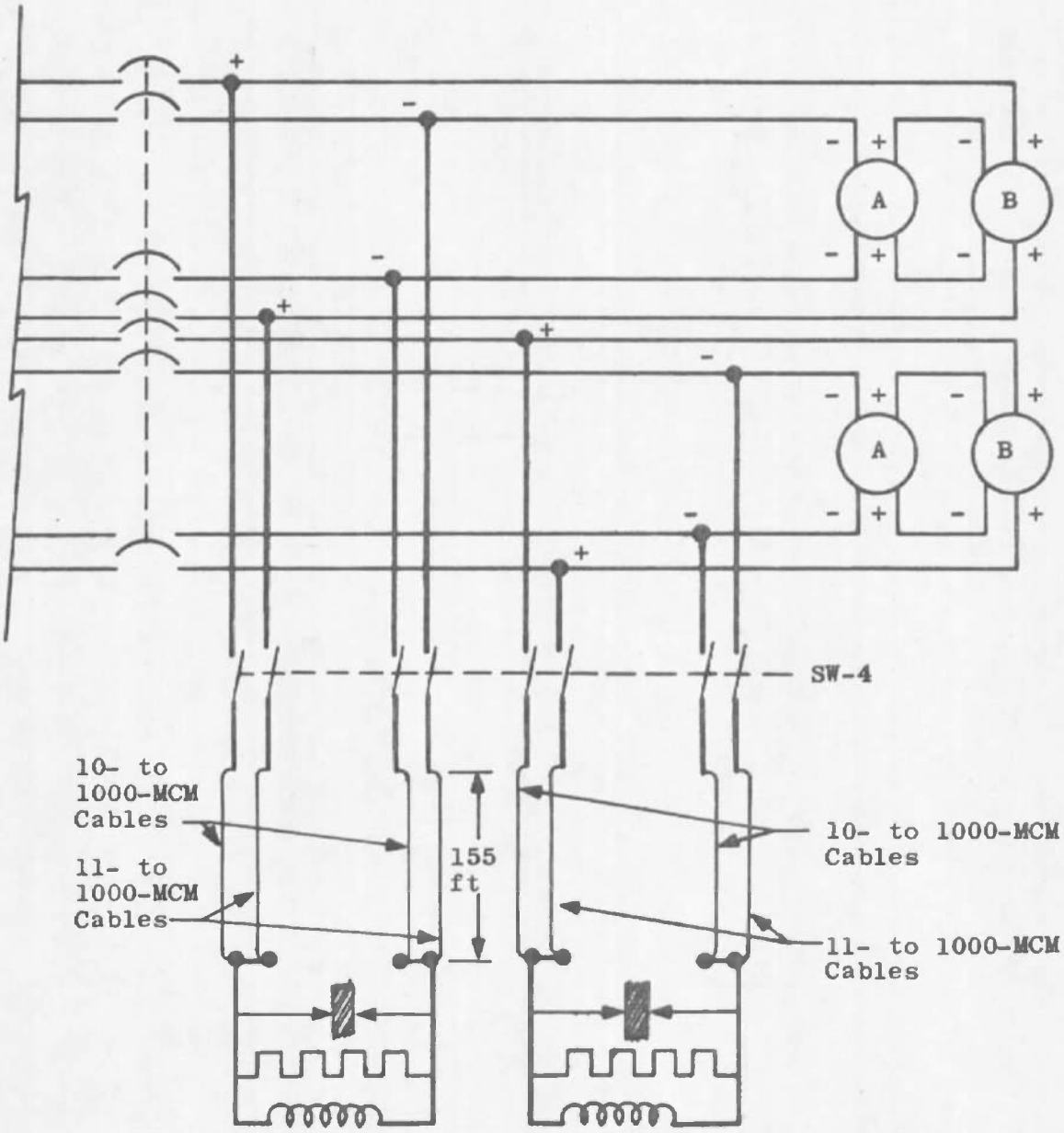

Fig. 9 B-Field Load Schematic Diagram

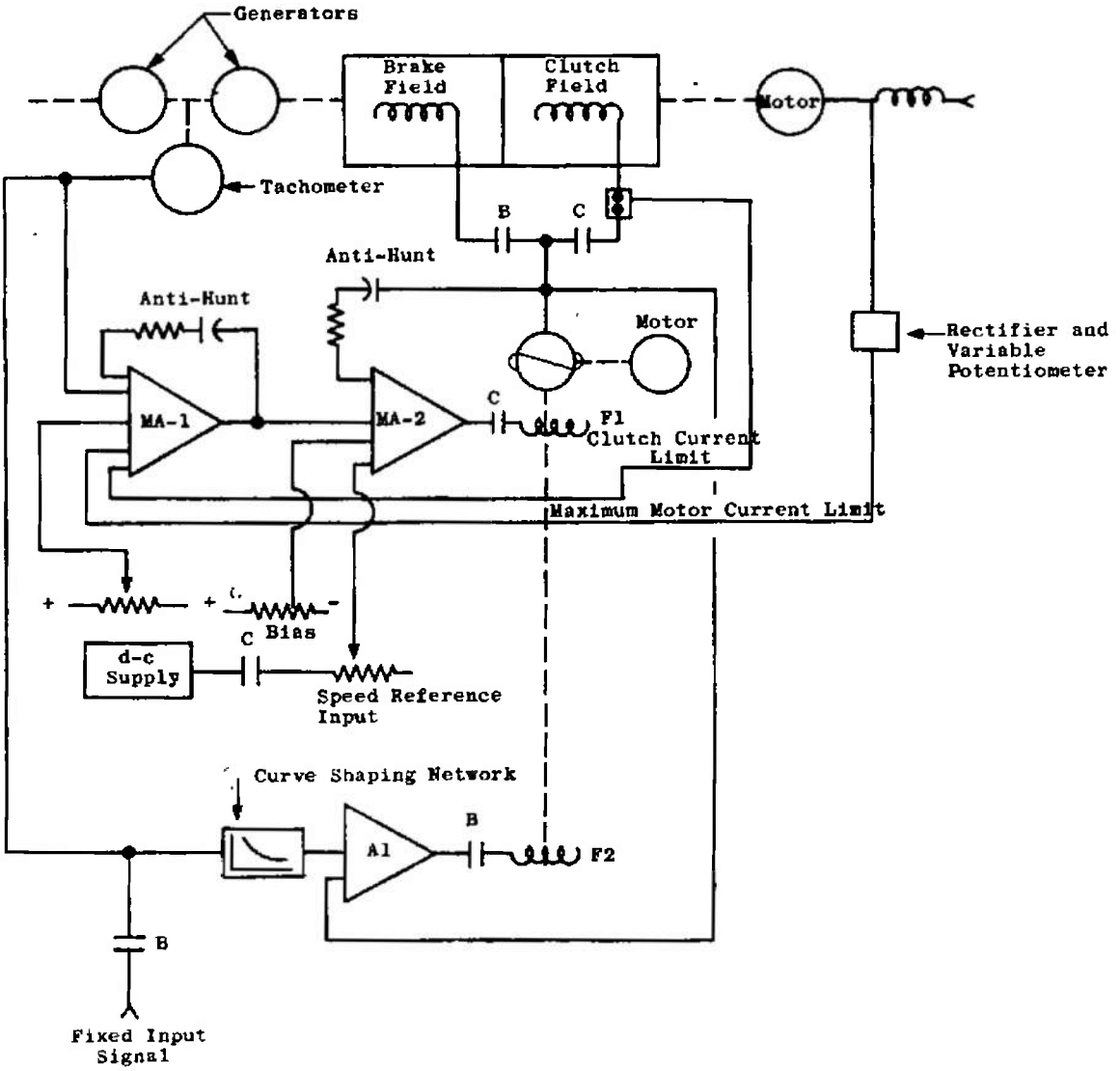

Fig. 10 M-G Set Speed Control-Basic Block Diagram

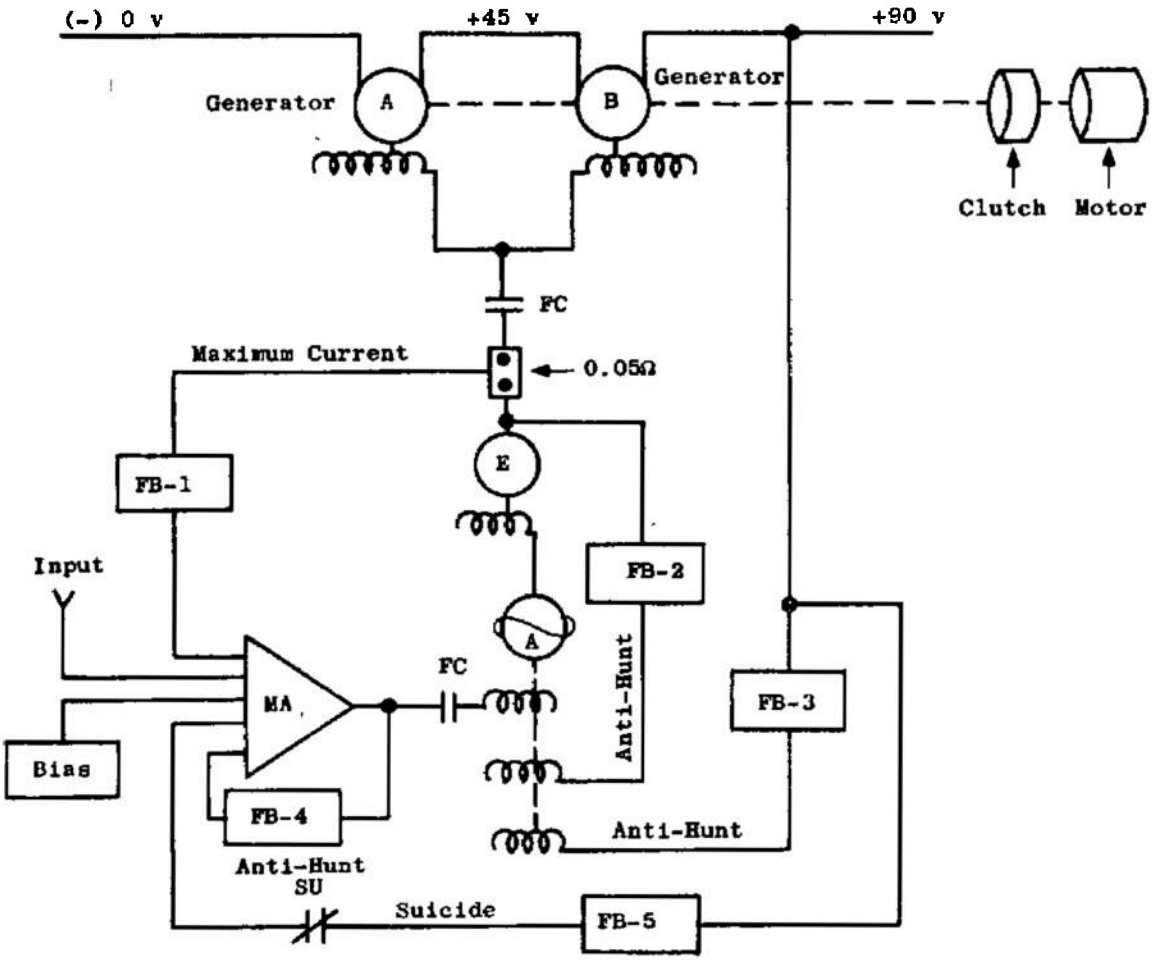

Fig. 11 Generator Voltage Control-Basic One-Line Diagram

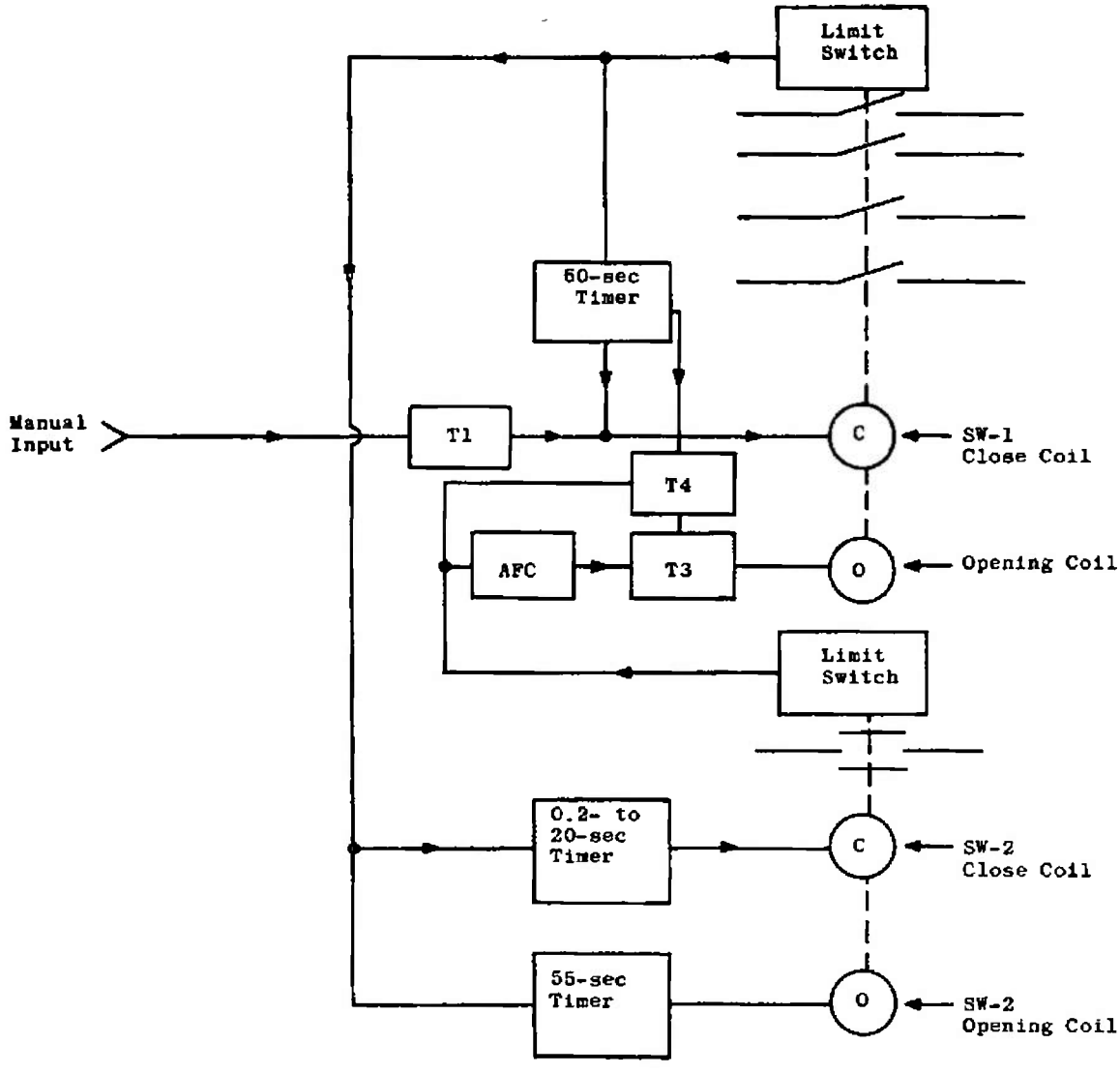

Fig. 12 Switching Control System

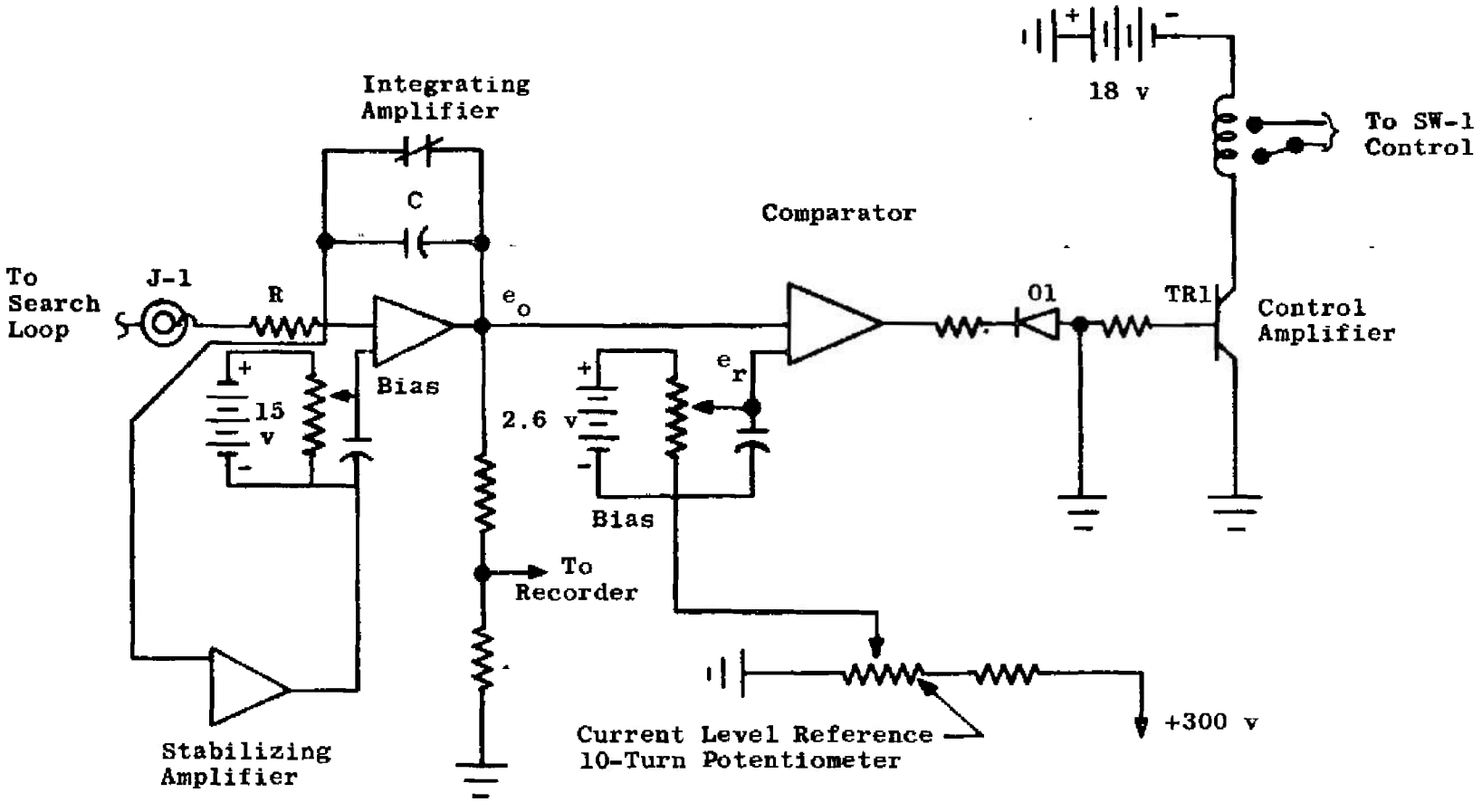

Fig. 13 Automatic Firing Circuit-Schematic Diagram

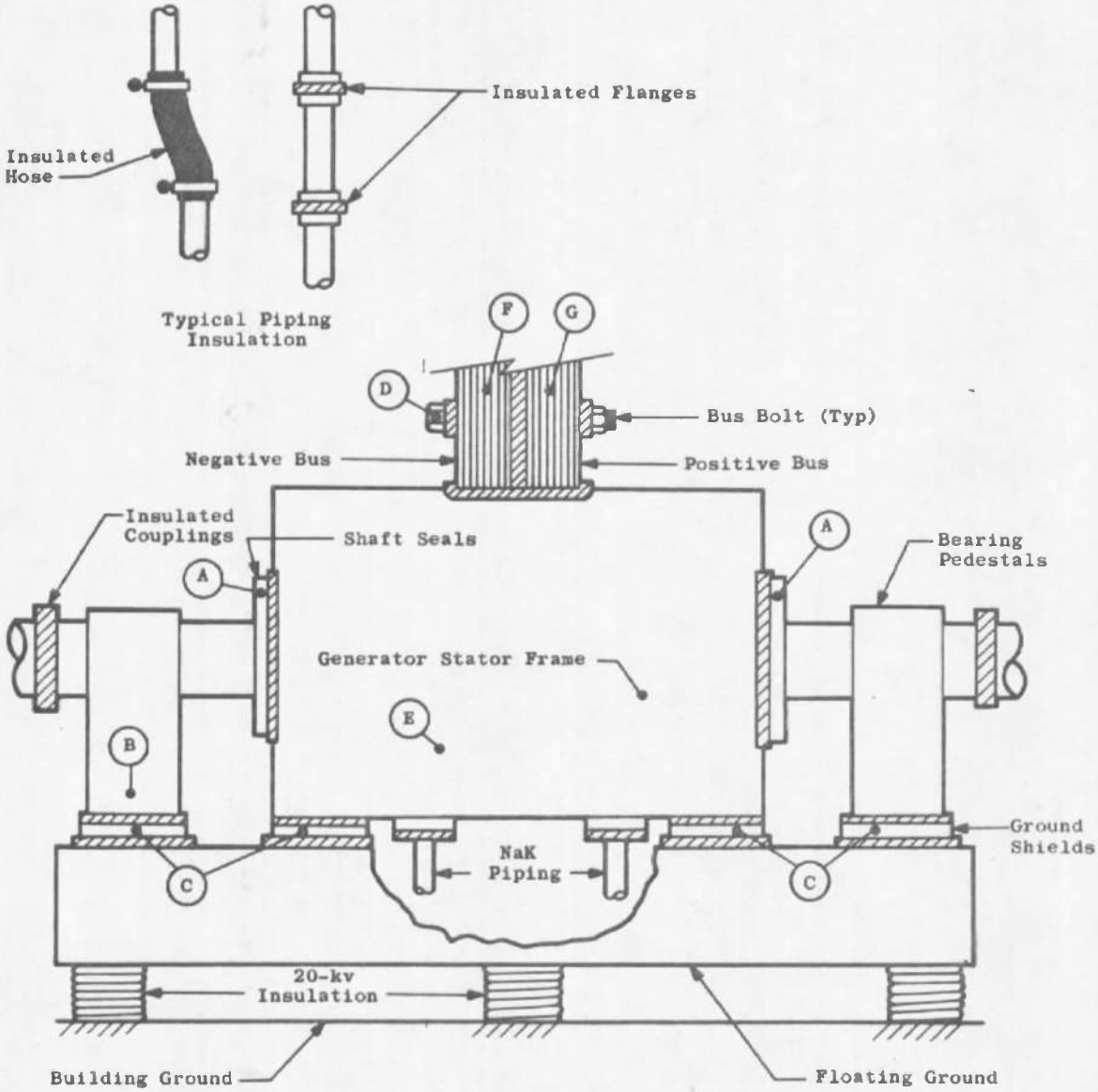

Fig. 14 Generator External Insulation Details

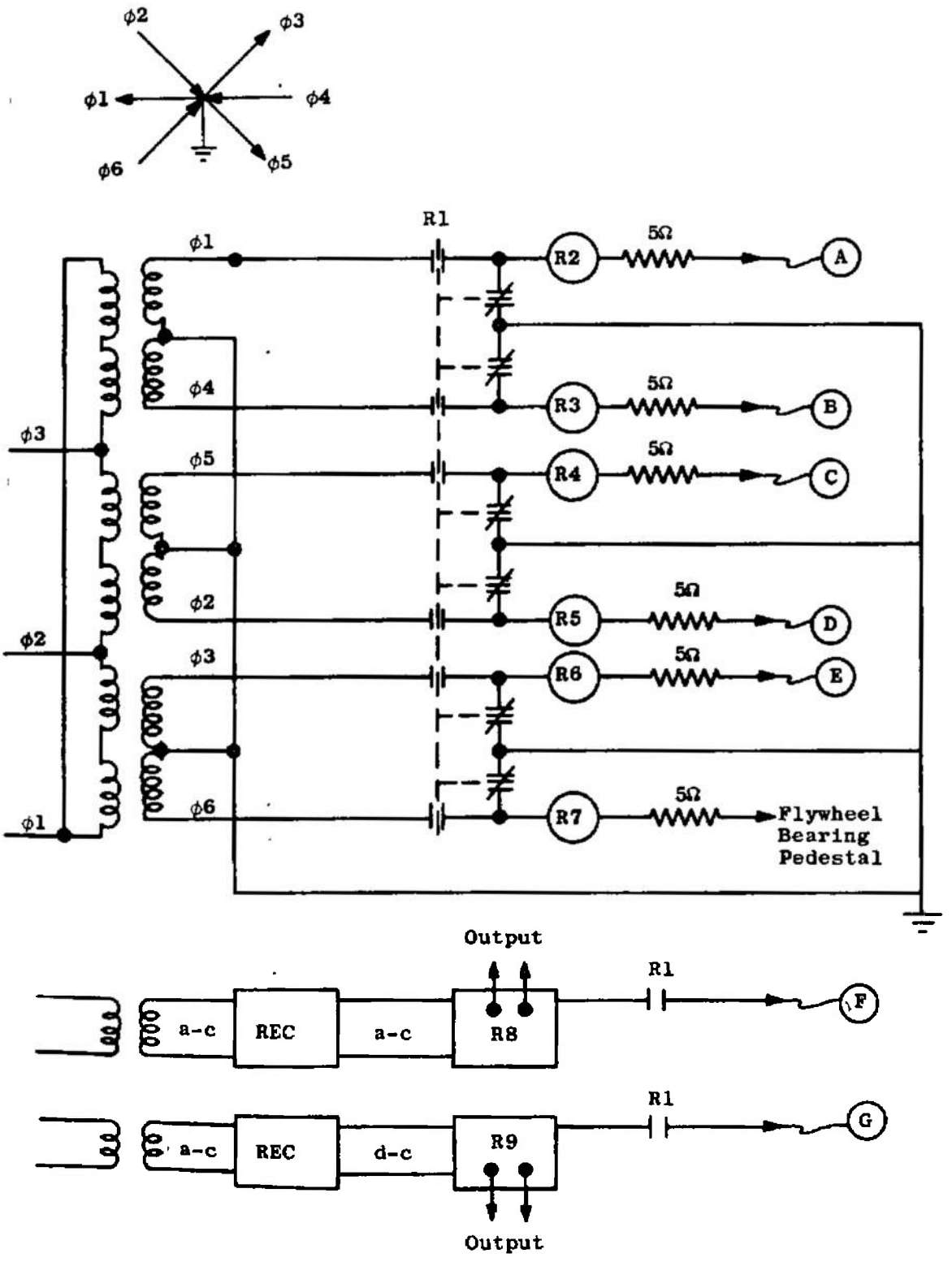

Fig. 15 Basic Schematic Diagram - Generator Insulation Check Circuit

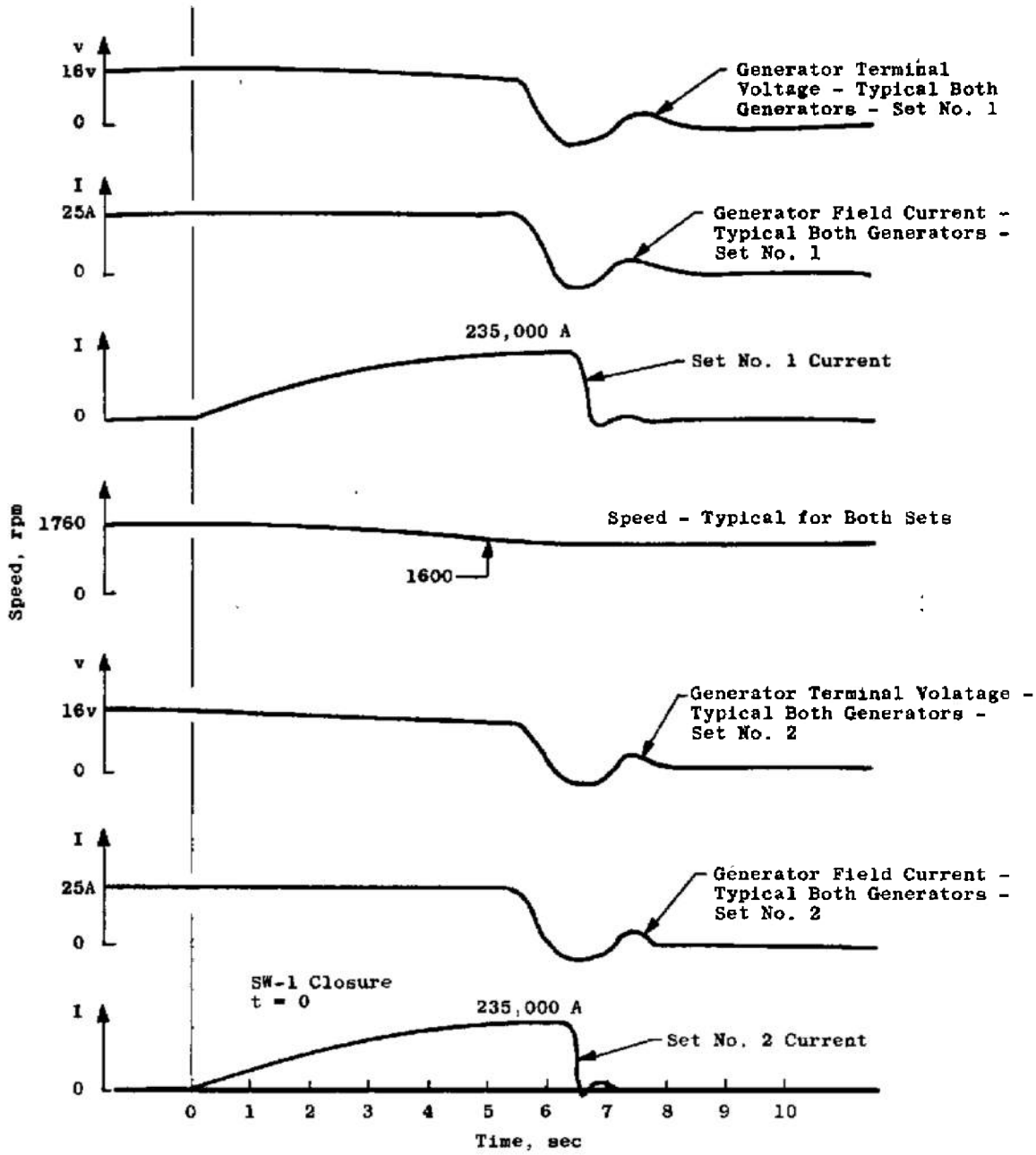

a. Arc

Fig. 16 Typical Run Curves

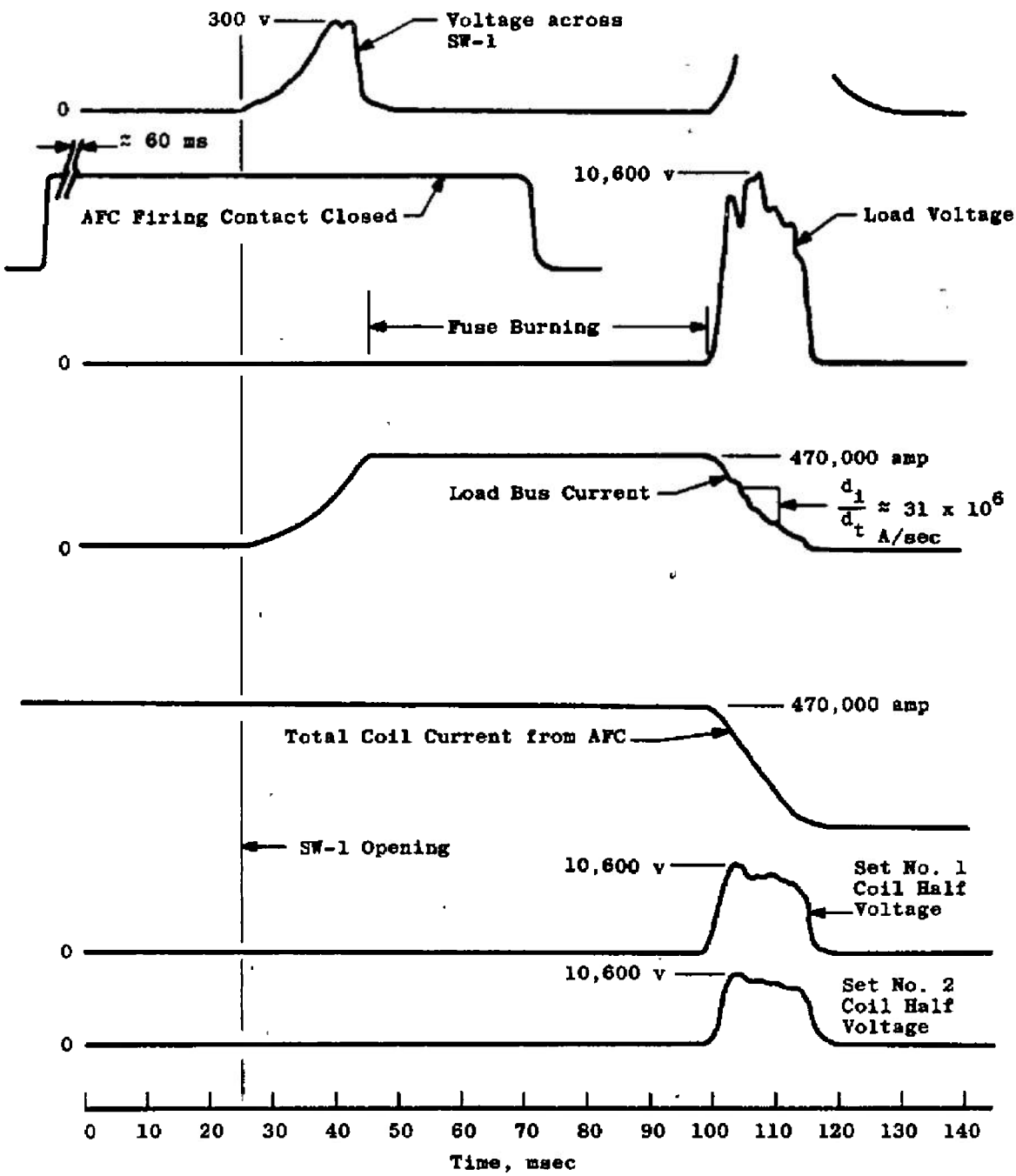

b. Chamber Load

Fig. 16 Concluded

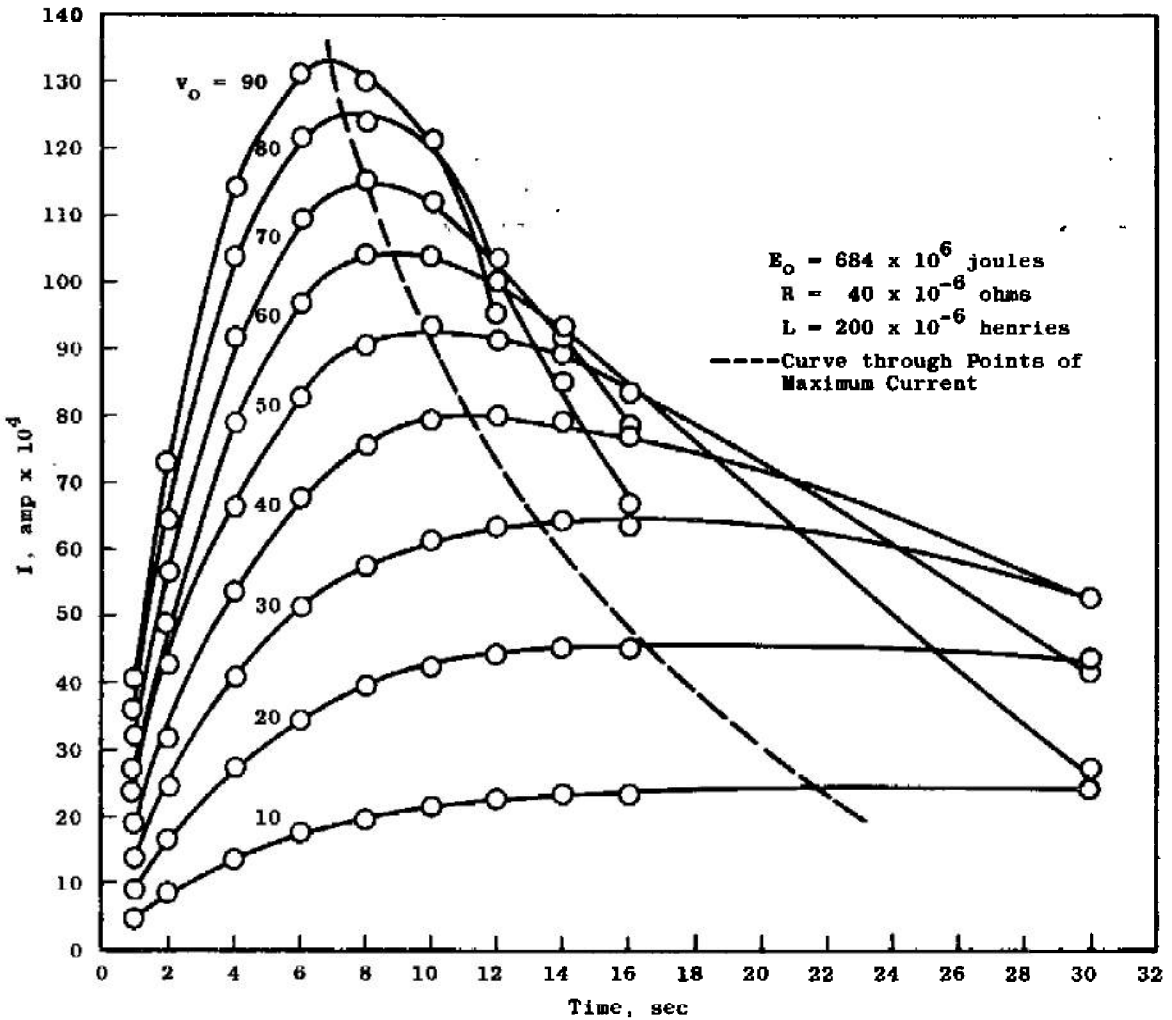

Fig. 17 Theoretical Currents as a Function of Time and Initial Generator Voltage

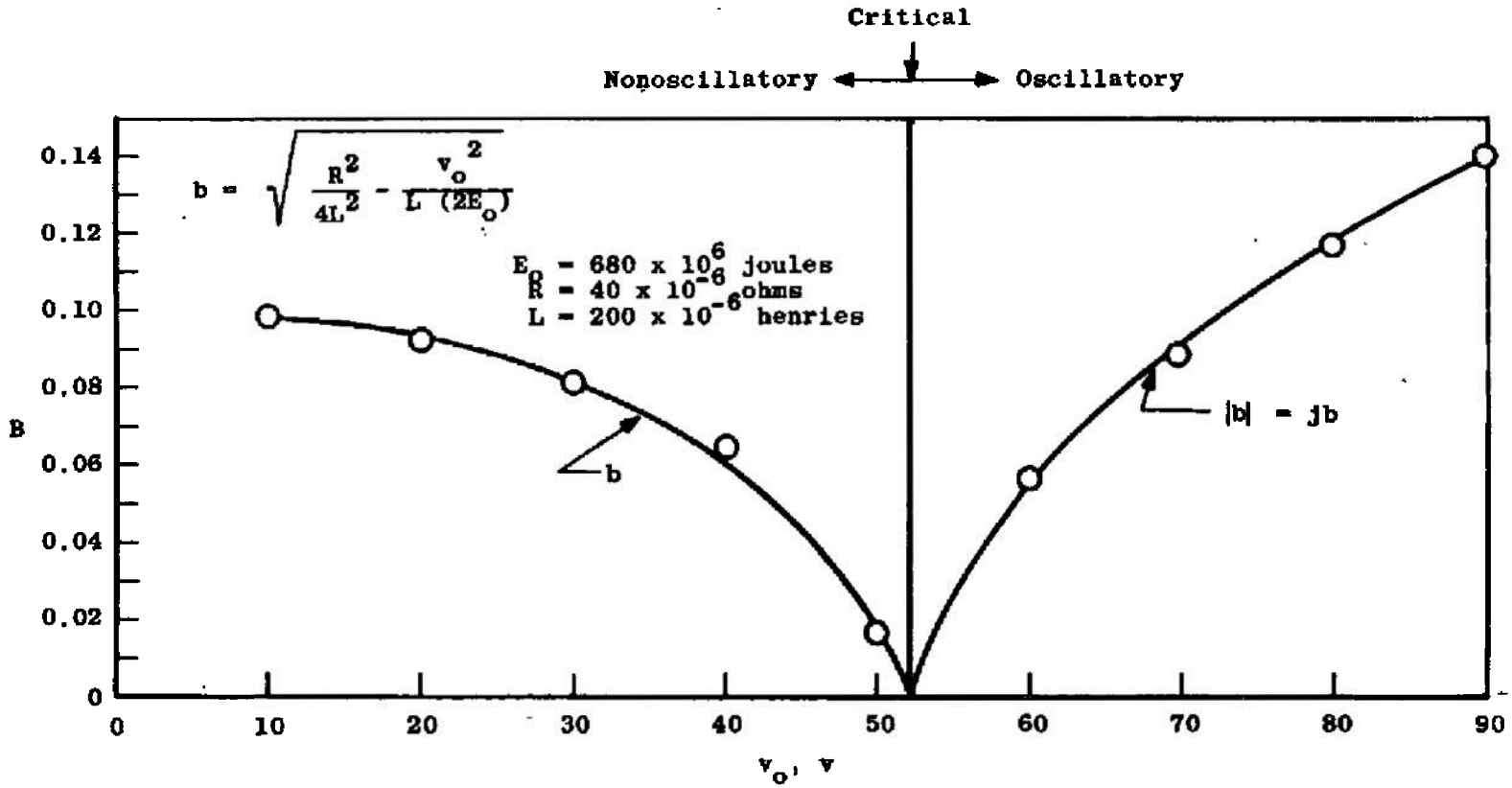

Fig. 18 Parameter 'b' as a Function of Initial Generator Voltage

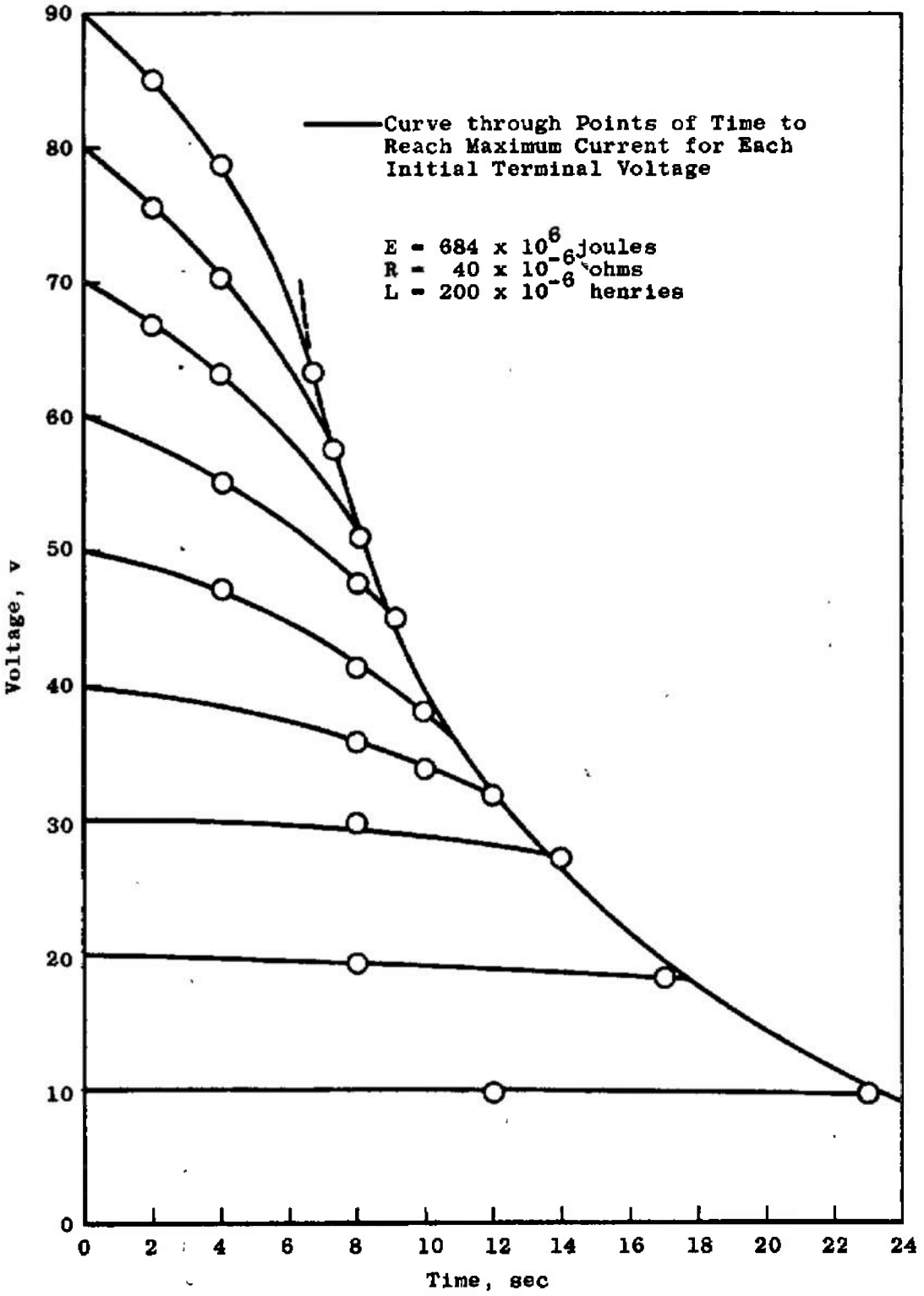

Fig. 19 Theoretical Generator Terminal Voltage during Charging Cycle as a Function of Time for Various Generator Initial Voltages

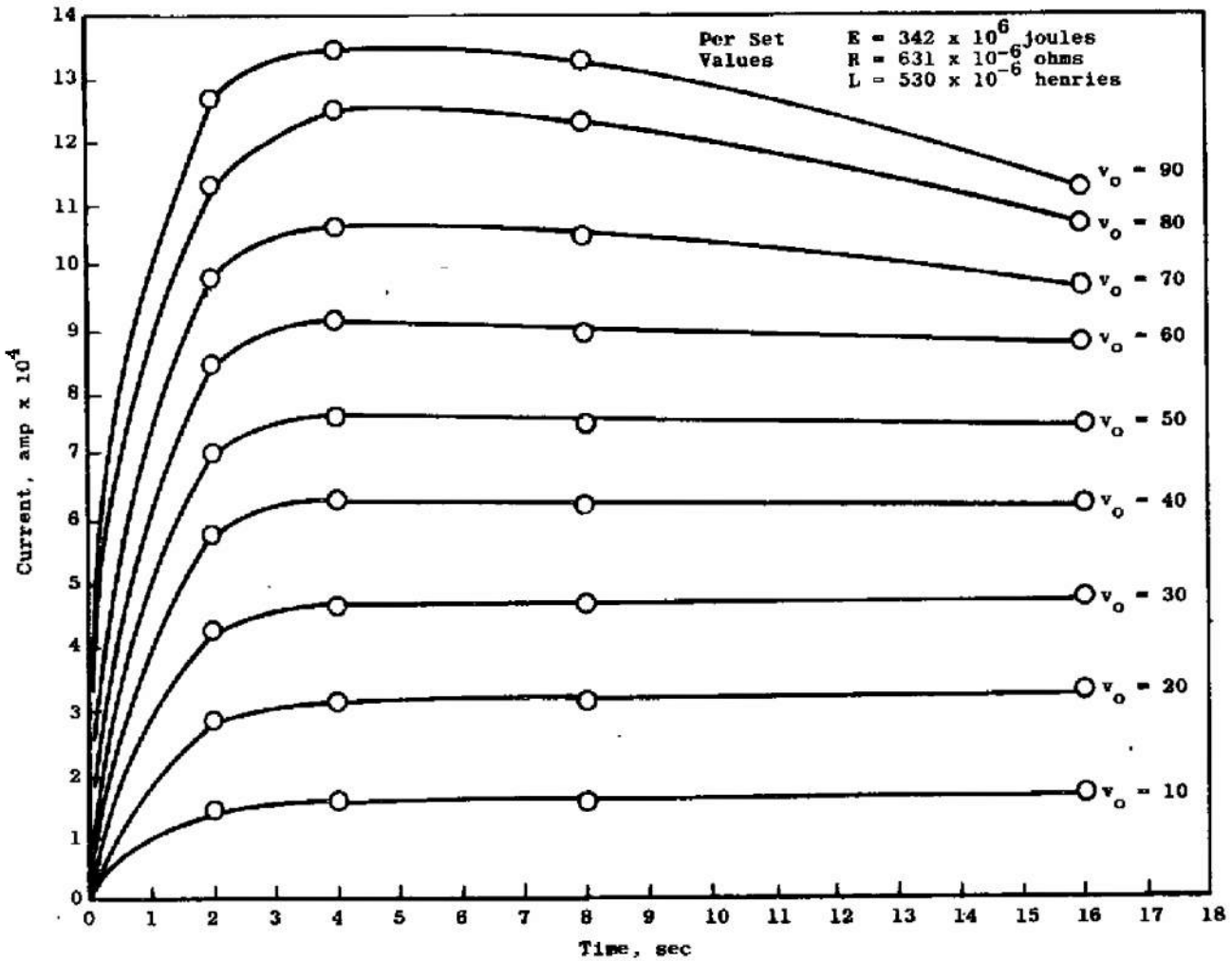

Fig. 20 Current as a Function of Time for B-Field Load

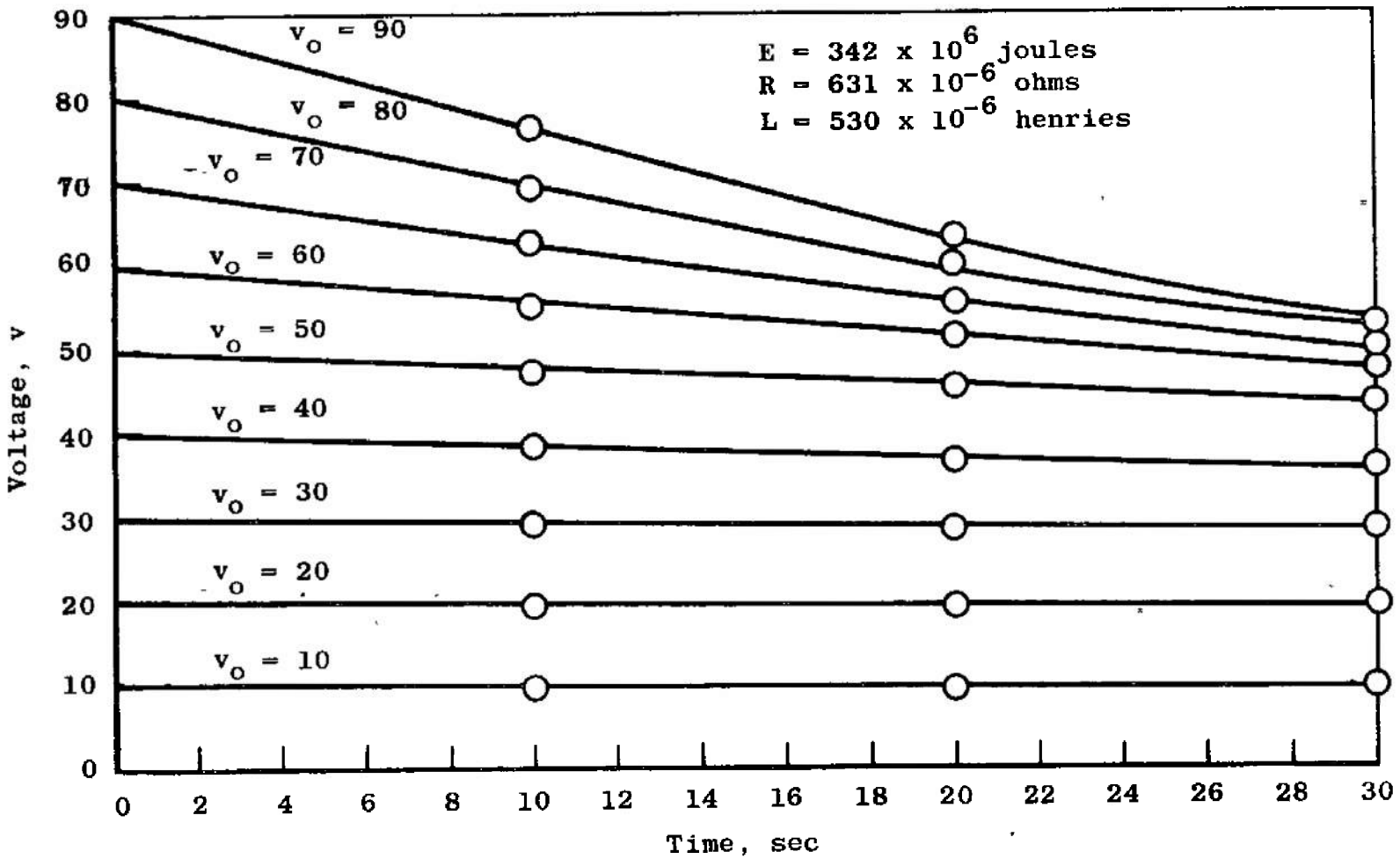

Fig. 21 Generator Speed versus Current, Initial Voltage, and Time for B-Field Load

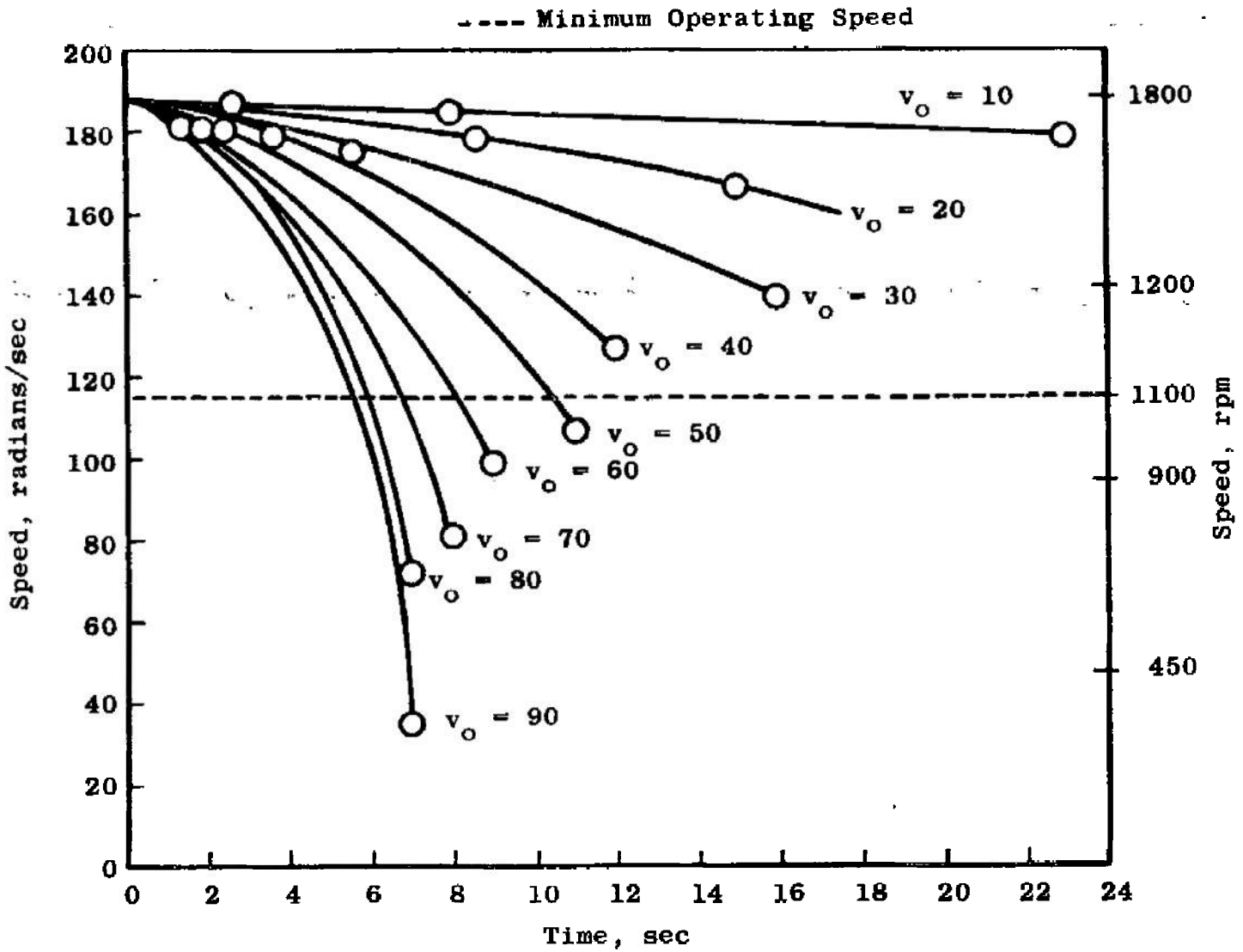

Fig. 22 Generator Speed versus Time, Current, and Initial Generator Voltage

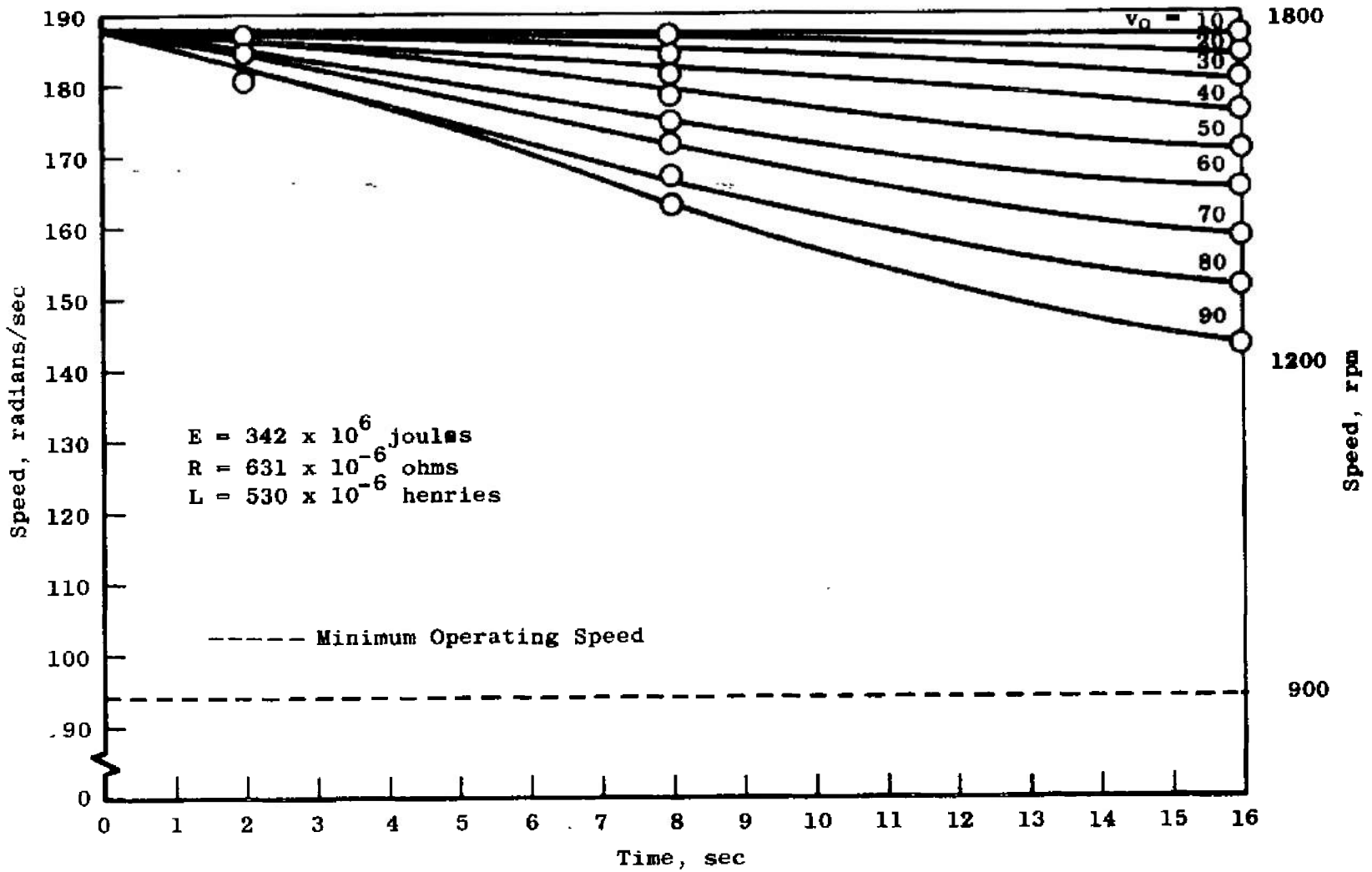

Fig. 23 Generator Terminal Voltage versus Time

Security Classification

DOCUMENT CONTROL DATA - R&D

(Security classification of title, body of abstract and indexing annotation must be entered when the overall report is classified)

1. ORIGINATING ACTIVITY (Corporate author) Arnold Engineering Development Center ARO, Inc., Operating Contractor Arnold Air Force Station, Tennessee	2a. REPORT SECURITY CLASSIFICATION UNCLASSIFIED 2b. GROUP N/A

3. REPORT TITLE
INDUCTIVE POWER SUPPLY FOR A 100-INCH HOTSHOT WIND TUNNEL

4. DESCRIPTIVE NOTES (Type of report and inclusive dates)
N/A

5. AUTHOR(S) (Last name, first name, initial)
Patterson, J. N., ARO, Inc.

6. REPORT DATE March 1967	7a. TOTAL NO. OF PAGES 71	7b. NO. OF REFS 11
8a. CONTRACT OR GRANT NO. AF 40(600)-1200 b. PROJECT NO. c. Program Element 65402234 d.	9a. ORIGINATOR'S REPORT NUMBER(S) AEDC-TR-66-260 9b. OTHER REPORT NO(S) (Any other numbers that may be assigned this report) N/A	

10. AVAILABILITY/LIMITATION NOTICES
Distribution of this document is unlimited.

11. SUPPLEMENTARY NOTES Available in DDC	12. SPONSORING MILITARY ACTIVITY Arnold Engineering Development Center Air Force Systems Command Arnold Air Force Station, Tennessee

13. ABSTRACT

This report describes a 100-million joule inductive power supply. A description of all major, or unique, components is presented. The supply furnishes energy primarily to a 100-inch. test section Hotshot Tunnel; however, other applications have been made since the initial operation. The system theory of operation is presented along with major operational problems that have developed during the five years the system has been in operation.

DD FORM 1 JAN 64 1473

Security Classification

14. KEY WORDS	LINK A ROLE	LINK A WT	LINK B ROLE	LINK B WT	LINK C ROLE	LINK C WT
hotshot						
wind tunnels						
inductive power supply						
acyclic generators						
drive motors						
control systems						
switching						

INSTRUCTIONS

1. ORIGINATING ACTIVITY: Enter the name and address of the contractor, subcontractor, grantee, Department of Defense activity or other organization *(corporate author)* issuing the report.

2a. REPORT SECURITY CLASSIFICATION: Enter the overall security classification of the report. Indicate whether "Restricted Data" is included. Marking is to be in accordance with appropriate security regulations.

2b. GROUP: Automatic downgrading is specified in DoD Directive 5200.10 and Armed Forces Industrial Manual. Enter the group number. Also, when applicable, show that optional markings have been used for Group 3 and Group 4 as authorized.

3. REPORT TITLE: Enter the complete report title in all capital letters. Titles in all cases should be unclassified. If a meaningful title cannot be selected without classification, show title classification in all capitals in parenthesis immediately following the title.

4. DESCRIPTIVE NOTES: If appropriate, enter the type of report, e.g., interim, progress, summary, annual, or final. Give the inclusive dates when a specific reporting period is covered.

5. AUTHOR(S): Enter the name(s) of author(s) as shown on or in the report. Enter last name, first name, middle initial. If military, show rank and branch of service. The name of the principal author is an absolute minimum requirement.

6. REPORT DATE: Enter the date of the report as day, month, year; or month, year. If more than one date appears on the report, use date of publication.

7a. TOTAL NUMBER OF PAGES: The total page count should follow normal pagination procedures, i.e., enter the number of pages containing information.

7b. NUMBER OF REFERENCES: Enter the total number of references cited in the report.

8a. CONTRACT OR GRANT NUMBER: If appropriate, enter the applicable number of the contract or grant under which the report was written.

8b, 8c, & 8d. PROJECT NUMBER: Enter the appropriate military department identification, such as project number, subproject number, system numbers, task number, etc.

9a. ORIGINATOR'S REPORT NUMBER(S): Enter the official report number by which the document will be identified and controlled by the originating activity. This number must be unique to this report.

9b. OTHER REPORT NUMBER(S): If the report has been assigned any other report numbers *(either by the originator or by the sponsor)*, also enter this number(s).

10. AVAILABILITY/LIMITATION NOTICES: Enter any limitations on further dissemination of the report, other than those imposed by security classification, using standard statements such as:

(1) "Qualified requesters may obtain copies of this report from DDC."

(2) "Foreign announcement and dissemination of this report by DDC is not authorized."

(3) "U. S. Government agencies may obtain copies of this report directly from DDC. Other qualified DDC users shall request through _____."

(4) "U. S. military agencies may obtain copies of this report directly from DDC. Other qualified users shall request through _____."

(5) "All distribution of this report is controlled. Qualified DDC users shall request through _____."

If the report has been furnished to the Office of Technical Services, Department of Commerce, for sale to the public, indicate this fact and enter the price, if known.

11. SUPPLEMENTARY NOTES: Use for additional explanatory notes.

12. SPONSORING MILITARY ACTIVITY: Enter the name of the departmental project office or laboratory sponsoring *(paying for)* the research and development. Include address.

13. ABSTRACT: Enter an abstract giving a brief and factual summary of the document indicative of the report, even though it may also appear elsewhere in the body of the technical report. If additional space is required, a continuation sheet shall be attached.

It is highly desirable that the abstract of classified reports be unclassified. Each paragraph of the abstract shall end with an indication of the military security classification of the information in the paragraph, represented as *(TS)*, *(S)*, *(C)*, or *(U)*.

There is no limitation on the length of the abstract. However, the suggested length is from 150 to 225 words.

14. KEY WORDS: Key words are technically meaningful terms or short phrases that characterize a report and may be used as index entries for cataloging the report. Key words must be selected so that no security classification is required. Identifiers, such as equipment model designation, trade name, military project code name, geographic location, may be used as key words but will be followed by an indication of technical context. The assignment of links, rules, and weights is optional.