ESD-TR-66-637
ESTI FILE COPY

ESD ACCESSION LIST
AL 55182
Copy No. 1 of 1 cys.

ESD-TR-66-637

ESD RECORD COPY
RETURN TO
SCIENTIFIC & TECHNICAL INFORMATION DIVISION
(ESTI), BUILDING 1211

(FINAL REPORT)

DEVELOPMENT AND EVALUATION OF SELF-INSTRUCTIONAL TEXTS AND AN OPERATIONAL SPECIFICATION FOR COMPUTER DIRECTED TRAINING IN INTERMEDIATE QUERY LANGUAGE, MODEL II, FOR SYSTEM 473L, UNITED STATES AIR FORCE HEADQUARTERS

October 1966

Doris Clapp Slough
David P. Yens
Judi L. Northrup
Harris H. Shettel

DECISION SCIENCES LABORATORY
ELECTRONIC SYSTEMS DIVISION
AIR FORCE SYSTEMS COMMAND
UNITED STATES AIR FORCE
L.G. Hanscom Field, Bedford, Massachusetts

Distribution of this document is unlimited.

Project: 7682
Task: 768204

(Prepared under Contract No. AF 19(628)-2935 by the American Institutes for Research, Pittsburgh, Pennsylvania.)

AD649051

LEGAL NOTICE

When U.S. Government drawings, specifications or other data are used for any purpose other than a definitely related government procurement operation, the government thereby incurs no responsibility nor any obligation whatsoever; and the fact that the government may have formulated, furnished, or in any way supplied the said drawings, specifications, or other data is not to be regarded by implication or otherwise as in any manner licensing the holder or any other person or conveying any rights or permission to manufacture, use, or sell any patented invention that may in any way be related thereto.

OTHER NOTICES

Do not return this copy. Retain or destroy.

ESD-TR-66-637

(FINAL REPORT)

DEVELOPMENT AND EVALUATION OF SELF-INSTRUCTIONAL TEXTS AND AN OPERATIONAL SPECIFICATION FOR COMPUTER DIRECTED TRAINING IN INTERMEDIATE QUERY LANGUAGE, MODEL II, FOR SYSTEM 473L, UNITED STATES AIR FORCE HEADQUARTERS

October 1966

Doris Clapp Slough
David P. Yens
Judi L. Northrup
Harris H. Shettel

DECISION SCIENCES LABORATORY
ELECTRONIC SYSTEMS DIVISION
AIR FORCE SYSTEMS COMMAND
UNITED STATES AIR FORCE
L.G. Hanscom Field, Bedford, Massachusetts

Distribution of this document is unlimited.

Project: 7682
Task: 768204

(Prepared under Contract No. AF 19(628)-2935 by the American Institutes for Research, Pittsburgh, Pennsylvania.)

FOREWORD

One of the research goals of the Decision Sciences Laboratory is the development of design principles for automated training subsystems which could be built into future Information Systems. Such subsystems would provide Information Systems with the capability of automatically training their own operators. The need for such on-the-job training capability has already become apparent. To be able to design such a capability requires first the solution of many conceptual and experimental problems.

Task 768204, Automated Training for Information Systems, under Project 7682, Man-Computer Information Processing, was established to formulate and answer some of these questions.

This report is one in a planned series supporting Task 768204. The project was undertaken by Decision Sciences Laboratory in support of the 473L Systems Program Office. Dr. Sylvia R. Mayer of Decision Sciences Laboratory served as Air Force Task Scientist and contract monitor.

Contract support was provided by the American Institutes for Research, Pittsburgh, Pennsylvania, under Contract No. AF 19(628)-2935, with Mr. Harris H. Shettel, principal investigator; Mrs. Doris Clapp Slough, project director; Mr. David P. Yens; and Miss Judi L. Northrup.

The technical guidance and support provided by Lt. Colonel Wood Ellis of the USAF Command Post are gratefully acknowledged. Thanks are also extended to the personnel of the USAF Command Post who served in the field tests of this course.

In ensuring the development of the operational specification for computer directed training in accordance with approved 473L standards, the A.I.R. project staff had the extremely valuable guidance of Dr. William F. Bennett, Mr. Marvin L. Chenevert, and Mr. Jack D. Schiff of the Federal Systems Division of International Business Machines, Inc. This is gratefully acknowledged. In addition, helpful contributions to the training design for the computer directed training package were made by Lt. Colonel Wood Ellis, Dr. Sylvia R. Mayer, Mr. Jack D. Schiff, and Mr. Marvin L. Chenevert.

This technical report has been reviewed and is approved.

DONALD W. CONNOLLY
Project Officer
Decision Sciences Laboratory

ROY MORGAN
Colonel, USAF
Director, Decision Sciences Laboratory

ABSTRACT

This report summarizes the development and evaluation of a programed, self-instructional course for on-the-job training of Air Staff personnel in the use of Intermediate Query Language, Model II. This is an information retrieval language used with the computer based, Air Force command and control system, System 473L. In addition, it describes a computer directed training capability that was designed specifically to use System 473L itself to effectively and efficiently provide training in Query Language. The report describes the need for on-the-job training and the rationale for a computer directed training capability to provide this training. It describes the development of the programed text, the text itself, and the effectiveness of the text materials based on tryout data. Finally, a description of the proposed computer directed training course is given, with emphasis on the training design. The 473L System configuration using the AN/FYQ-11 computer, towards which this study was oriented, will not be implemented for the Headquarters U. S. Air Force Command and Control System. However, this design study for the training subsystem may be of interest to researchers on computer-directed instructional systems.

TABLE OF CONTENTS

	Page
FOREWORD	ii
ABSTRACT	iii
SECTION I. INTRODUCTION	
1.1 Background	1
1.2 The Air Force Command and Control System (473L)	1
1.3 The Training Problem	2
1.4 The Overall Training Strategy	2
1.4.1 The Need for a Programed, Self-Instructional Text	3
1.4.2 The Need for an Operational Specification for Computer Directed Training	3
SECTION II. THE DEVELOPMENT OF THE PROGRAMED TEXT	
2.1 The Selection of Course Objectives and Content	7
2.2 The Selection of Specific Training Strategies	7
2.2.1 Trainee Characteristics	7
2.2.2 The Course Objectives	8
2.2.3 Characteristics of the Course Content	8
2.3 Description of the Final Program	9
2.3.1 The Preprogram	9
2.3.2 The Textual Program on Query Language	9
2.3.2.1 Number of Frames	9
2.3.2.2 Content of Frames	9
2.3.2.3 Reference Materials	12
2.3.2.4 Program Format	22
2.3.3 Computer Exercises	22
2.3.4 Test	22
2.4 The Drafting of Frames, Initial Program Tryouts, Technical Review, and Revisions	24
2.4.1 Subjects	24
2.4.2 Results	24
2.5 Field Tryout and Revision	26
2.5.1 Design	26
2.5.2 Subjects	26
2.5.3 Administration of the Field Tryout	27
2.5.4 Results of the Field Tryout	27
2.5.4.1 Completion Times for the Programed Materials	27
2.5.4.2 Scores on the Final Posttest	28
2.5.5 Revisions After the Field Tryout	28
2.6 Discussion and Recommendations	29
SECTION III. DEVELOPMENT OF THE OPERATIONAL SPECIFICATION FOR COMPUTER DIRECTED TRAINING	
3.1 Introduction	31
3.2 Development of the Operational Specification	31
3.3 Description of the Operational Specification	32
3.3.1 The Training Sequence Logic	32
3.3.1.1 Complexity of the Training Design	32

Table of Contents (cont.)

Page

3.3.1.2 Provision for Adaptation of the Capability . 33
3.3.1.3 The Training Sequence Logic 33
3.3.2 Operating Procedures and the Procedural Flow Diagram 45
3.4 Discussion and Recommendations 49

REFERENCES 51

APPENDICES

A - Number of Frames in Each Volume of the Program

B - Final Test

C - Final Test Scoring and Answer Key

D - Sequence and Contents of the Computer Directed Training Sets

TABLES

1 - Average Error Rates on Draft Volumes Pertaining to QL that Were Used in the Preliminary Tryouts 25

2 - Percent Error for Each Trainee on the Program and Percent Correct on the Test for Each of the Preliminary Tryouts 25

3 - Background Data for Trainees Participating in the Field Tryout 26

4 - Program Completion Time for Each Trainee 27

5 - Percent Correct Scores on Final Test for Individual Trainees in the Field Tryout 28

6 - Design for Computer-Directed Training Overlay Process Step Key Functions 46

FIGURES

1 - Schematic Diagram of Planned Information Flow in the Design for a Second-Generation 473L System 14

2 - A description of the Proposed Procedural Steps Required to Retrieve Data for a Specified Problem Using Query Language 15

3 - A Partial Listing and Description of the Data Files . 17

4 - An Incomplete Table with Typical Values 18

Table of Contents (cont.)

FIGURES (cont.)

Page

5 - An Example of How Information is to be Retrieved from the Data Files Using Query Language 19

6 - Formats and Functions of SUM in the Output Selector . . 20

7 - Examples of Input and Output Formats for SUM 21

8 - The Training Sequence Logic Flow Diagram for Computer Directed Training 40

Editor's Note

The reader should note that the 473L System configuration using the AN/FYQ-11 computer, towards which this study was oriented, will not be implemented for the Headquarters U. S. Air Force Command and Control System.

This report is presented since the general design of the training subsystem could serve as a model for other computer-directed training courses in other computer-based military information systems.

Section I

INTRODUCTION

1.1 BACKGROUND

Query Language is a constrained version of the English language which has been developed as a mode of man-machine communication in the Air Force Command and Control System, System 473L (this system is described in section 1.2). Query Language has evolved over a period of time to accommodate projected changes in the system hardware (viz., from the IBM 1410 to the Librascope 3055), and to permit problem solutions for additional areas of resource management. This evolution involved three successive versions of the language, in the following order: OTC Query Language; Query Language Model I; and Query Language Model II. The modifications in the language were substantial enough so that personnel trained in the use of the Query Language designed for the Operational Training Capability (OTC) phase of System 473L could not easily transition to the use of the Query Language designed for the Model II phase of System 473L. In addition, appropriate training was needed for new personnel. Therefore, a new training package was requested to teach the version of Query Language appropriate to the Model II phase of System 473L. It was further requested that a detailed description be developed for a computer directed training capability, in accord with 473L standards, so that the Air Force could evaluate the feasibility of implementing such a capability.

This report describes the development of a programed, self-instructional course designed for on-the-job training of System 473L users in Intermediate Query Language, Model II.[1] In addition, it describes the development of an operational specification for a computer directed training (CDT) capability designed specifically to use the 473L System itself to effectively and efficiently train Air Staff personnel in the use of Intermediate Query Language, Model II. The proposed computer directed training capability has further significance in its potential, with appropriate adaptations, for providing training in other uses of System 473L. In addition, the general design of the training course set forth in the operational specification, i.e., the training sequence logic, could serve as a model for similar computer directed training courses in other computer based military systems.

1.2 THE AIR FORCE COMMAND AND CONTROL SYSTEM (473L)

System 473L is an information processing and retrieval system located in the Air Force Command Post at the Pentagon. An integral part of the system is a large capacity computer.

---

[1]The scope of Intermediate Query Language, Model II, is defined in Chapter 3 of 473L-OS-40: Operational Specification for Query Language, Model II, dated 13 April 1965, Unclassified.

The system is designed for use by Air Staff personnel in solving USAF resource management problems. There are two basic methods of communication between the System 473L operator and the data processing subsystem: 1) operational capability overlays and 2) Query Language. With the overlay capabilities the operator is guided in selecting and making his input but his retrieval of information is restricted to a set of previously specified outputs. With Query Language, the operator's input is not guided, but his retrieval of information is not as restricted. Thus, Query Language is a vital complement to the overlay method of communication with System 473L.

1.3 THE TRAINING PROBLEM

In developing an overall training strategy, consideration was given to two interacting aspects of the training problem: the training task itself and the trainees.

The use of System 473L is not restricted to a small number of system operators; it is intended that this system, including Query Language, be used by a large number of Air Staff personnel. These constituted the potential trainees for this course.

It was specified that the training course should teach only Intermediate Query Language, since it includes those aspects of the language that are most commonly used by Air Staff personnel. The more advanced uses of Query Language are restricted primarily to programmer use (e.g., for maintaining and updating the data base), and thus these uses were not considered appropriate for the proposed course.

Proficient use of Intermediate Query Language requires a knowledge of both the structure and contents of the system data base and the rules regulating the use of vocabulary, syntax, grammar, and punctuation of Query Language. In addition, since Query Language must be entered on the System 473L integrated console, the user must ultimately become proficient in the operation of this console. Thus, while training on the basic use of the console is not an integral part of this training course, it was considered desirable to incorporate practice on the operations that are most frequently used to input Query Language.

1.4 THE TRAINING STRATEGY

Due to the dynamic structure and large size of the data base for System 473L, the dynamic nature of Query Language itself, the frequent turnover of Air Staff personnel, and the vagaries of their normal and emergency duty schedules, effective and efficient training of Air Staff personnel as proficient users of Query Language requires an on-the-job training capability.

1.4.1 The Need for a Programed, Self-Instructional Text. The need for maximum flexibility in the required training schedule to adapt to the needs of individual trainees, in terms of both individual learning rates and individual schedules of Air Force duties, suggested the desirability of developing programed, self-instructional materials that could be used for on-the-job training.

1.4.2 The Need for an Operational Specification for Computer Directed Training. Since System 473L is an information processing system, it is capable of implementing both training and evaluation functions. The desirability of using the system itself as an adaptive training device, in conjunction with programed training materials, was suggested by several considerations:

1) The design for the second-generation System 473L has certain physical characteristics that make it especially amenable to performing training and evaluation functions. The computer's integrated console contains a keyboard to permit operator inputs and an overlay board to permit access to the internal program. The overlay is especially useful, since a special panel can be designed to provide the trainee with direct access to and control over the computer directed training functions. The computer can be programmed to evaluate trainee inputs. In addition, the integrated console has a cathode ray tube output that permits alphanumeric displays. Such displays can be used to present both instructional (cue) and evaluative (test) materials. Further, the system permits time-sharing, so that more than one training station could be made available at any one time;

2) Letting the trainee use the system itself for training would, it is believed, make the training materials inherently more interesting and, as a result, increase the trainee's motivation to complete the course. It should also enhance the trainee's proficiency in performing specific system operations. Enhanced facility in operating the system would probably increase the frequency with which trainees would use the system in the future;

3) The design for the System 473L computer permits more flexibility than conventional training materials in adapting the content and sequence of instruction to fit individual needs. Remedial sequences and content can be contingent on an evaluation of a series of criterion responses;

4) In addition, a computer can be more flexibly responsive than a text in complying with trainee requests for particular training materials. That is, a computer is more adaptable to learner-controlled instruction. This is a significant advantage not only for the training phase of a course, but more especially

for proficiency maintenance training, when the trainee is more capable of self-evaluation and determination of necessary remedial materials;

5) Not only can knowledge of results be immediate, but analysis-feedback can be provided to the trainee based on his specific past performance;

6) Due to the computer's planned capability for rapid data-analysis and its large storage capacity, detailed recording and analysis of trainee responses and, therefore, increased accuracy in assessing trainee proficiency and determining needs for specific revisions in the training materials, is more feasible than with conventional materials;

7) The potential high-speed printout capability provides automatic records of student progress;

8) A further, potentially significant advantage of a computer directed training capability is that, with some adaptations, it could also be used to provide training in other uses of System 473L.

Pretest data from the tryouts conducted with the programed text for OTC Query Language[2] indicated that the potential trainees are relatively homogeneous in terms of their prior knowledge of Query Language, e.g., on the pretest used for the initial tryout, no trainee scored higher than three per cent. Therefore, computer directed training was considered most desirable for the final phases of training, when there would be a greater need for instructional flexibility due to increased variability in trainee proficiency. However, it was felt that the increased motivation for training and the projected increase in future use of the system due to increased operator proficiency would justify the additional expenditure necessary to provide computer direction for all phases of training, provided that this training capability would not impede the operational capabilities of System 473L.

In view of the above advantages of a computer directed training capability, the Air Force decided that a detailed operational specification should be developed to describe such a capability and this operational specification should then be evaluated to assess the feasibility of implementation in terms of the impact on System 473L operational capabilities and the scope of programming required for this capability. Since the need for the programed, self-instructional text was immediate and the feasibility of computer directed training was uncertain,

---

[2]A description of the development and evaluation of the programed text for OTC Query Language is presented in reference 1. The text itself is presented in reference 2.

the Air Force indicated that the programed instructional text materials should be developed first and that they should constitute a self-sufficient package, not dependent on any aspect of the computer directed training package.

Section II

THE DEVELOPMENT OF THE PROGRAMED TEXT[3]

The development of the programed text involved several successive phases of work: the selection of course objectives and content; the selection of training strategies; the drafting of the programed materials, and initial program tryouts and revisions; and the field tryout and revision. These phases are described below. In addition, this section describes the final program and supplementary materials, and evaluates the effectiveness of the text.

2.1 THE SELECTION OF COURSE OBJECTIVES AND CONTENT

The primary objective of the programed instructional text is to enable trainees to write statements in Intermediate Query Language, Model II, that could be used to retrieve information needed to solve moderately difficult resource management problems, stated in English. Subcriterion objectives that were prerequisites to the primary objective included an orientation to the 473L System, and knowledge of the organization of information in the data files in computer storage.

Before preparing the draft instructional program, it was necessary to define the specific content of the materials that would most effectively and efficiently reach the established terminal objectives. Then, appropriate training strategies were selected on a topical basis, according to their appropriateness for each topic. Since Query Language transitioned from Model I to Model II during the period of development, the original outline and training strategies were specific to Query Language, Model I; as Query Language evolved, changes were made in the program to correspond to the changes in content. Thus, revisions during program development required not just changes in training strategy but also substantial changes in program content.

2.2 THE SELECTION OF TRAINING STRATEGIES

Training strategies are based on the interaction of three factors: trainee characteristics, the course objectives, and specific characteristics of the course content.

2.2.1 Trainee Characteristics. The following profile describes pertinent characteristics of the population of new trainees who will use this course: most trainees will have reached a minimum educational level of 12 years of public schooling; they will have received a 10-hour indoctrination course on the 473L System,

[3]The programed text for Query Language, Model II, is presented in reference 3.

including a one-hour orientation lecture on the use of Query Language; they will have received no formal training in the use of Query Language; they will have already acquired limited proficiency in using the integrated console in the overlay mode of operation.

Since initial variability of potential trainees in terms of their prior knowledge of Query Language is negligible, it did not appear urgent for the content of instruction to be varied for individual trainees. That is, there seemed to be no need to use special techniques such as branching or gating to accommodate for wide differences in previous knowledge.

In writing the instructional materials, an attempt was made to gear the reading difficulty to the ninth grade level in order to facilitate training efficiency. This was done by exerting control over sentence length; checking the level of infrequently used words and, whenever possible, replacing those whose level was unusually high; and, on a more empirical basis, by revising those steps which appeared difficult in terms of initial tryout data.[4]

2.2.2 The Course Objectives. The primary objective of this course, as mentioned previously, is to develop proficiency in writing Query Language statements for a representative set of problem types. This required the development of verbal, conceptual skills. The instructional programing techniques selected as most appropriate were the use of small steps, careful sequencing, overt written responding (with responses building in complexity as more material is learned), immediate confirmation, and self-pacing. The selection of this methodology was based on previous experience at the Institutes with its application to similar training problems.

2.2.3 Characteristics of the Course Content. The selection of an overall programing methodology was primarily dependent on trainee characteristics and the terminal objectives. More specific training strategies were selected on the basis of the characteristics of the subject matter.

One of the strategies contingent on the course content was the extent to which the data in computer storage should be sampled by the training problems. The stored information in System 473L is extensive and AF documents are available to aid the operator in determining the location and format of the data to be accessed. Further, some of the data files have varying frequency of use; an individual file might be used rarely by some Air Force personnel and very frequently by others, depending on the primary function

[4]The grade level of words was determined by referencing Thorndike, E. L. & Lorge, I. The teacher's word book of 30,000 words. New York: Columbia University, 1959.

of the particular user group (e.g., logistics, personnel, etc.). Therefore, it was decided that while basic training should exhaust the possible capabilities and variations in format of Intermediate Query Language, this training could not feasibly be applied to an exhaustive sample of the actual data in computer storage. Therefore, the range of data for which the trainees were to write Query Language statements during the training course was not intended to be exhaustive but to constitute a representative sample of the types of information in computer storage. This approach was expected to minimize training time by reducing the redundancy inherent in an approach that sampled all data. To provide for effective transfer of training for the retrieval of types of data not specifically covered in the training course, the trainees were to receive extensive practice in the use of the AF documents specifying the location and format of data.

The sequencing of training steps was dependent on the intrinsic interaction among the items to be covered. For example, understanding the structure of a Query Language statement requires knowledge of the organization of information in computer storage. Therefore, the structure of the computer files was taught early in the course. As in this case, whenever possible sequencing was designed to optimize the amount of positive transfer from one concept to another.

2.3 DESCRIPTION OF THE FINAL PROGRAM

2.3.1 The Preprogram. A preprogram of 34 frames was developed to familiarize the trainees with the characteristics of the textual program and take the place of an initial orientation lecture on self-instructional programing. This preprogram is designed to be taken prior to the programed books on Query Language and would enable trainees to start the Query Language textual program without any additional assistance. Thus, the preprogram reduces to a bare minimum the need to utilize the time of training personnel.

2.3.2 The Textual Program on Query Language.

2.3.2.1 Number of frames. Appendix A shows the number of frames in each volume of the programed text on Query Language. The total number of frames, counting the preprogram, is 1448.

2.3.2.2 Content of frames. The program is cumulative in that the ability to write Query Language statements depends on a number of subcriterion skills, and, therefore, the subcriterion skills were developed first.

The dependence of the criterion upon subcriterion skills is reflected by the sequence of topics in the program. Thus, the initial sections of the program develop the subcriterion skills: successively, 133 frames are devoted to an orientation to the 473L System; 43 frames cover the organization of information in the data files; 21 frames cover the selection of the file from which the desired data might be obtained; and 51 frames cover the

selection of the attributes and values that need to be specified; the major portion of the program, consisting of 977 frames, provides intensive development of the ability to write Query Language statements. The last three volumes, consisting of 189 frames, give extensive guidance and practice in the use of the Air Force Data Control Manuals, so that the trainee can learn to write "complex" Query Language statements, which require great facility in working with a number of data files, and so that the trainee can become proficient in using these manuals and be able, in the future, to readily access data from files that he has not previously worked with or from files that he is not extensively familiar with.

The strategy used in developing proficiency in writing Query Language statements is to require that trainees learn the functional correspondence between the rules of format and the appropriate computer operations. An important factor in this development of proficiency is the ability to understand the organization of the data files. The importance of this factor is illustrated by the frames below, excerpted from Volumes XI and XII. For illustrative purposes, the frame answers are also shown here, enclosed in [ ] and/or underlined where appropriate.

Volume XI: MIN and MAX Functions

MIN and MAX as Values

1. Another function which Query Language can perform is to select entries with maximum and minimum values of a particular attribute. To find an airfield with the longest runway, you would want to select the entry with the (minimum/maximum) [maximum] value for RNWY LENGTH.

---

3. Which of the two entries below will be selected? (Airfield name) [Hobson]

... WITH RNWY LENGTH = MAX ...

AFLD NAME	HOBSON	CHECKER
RNWY LENGTH	15ØØØ	115ØØ
RNWY WIDTH	15Ø	2ØØ

---

5. When MAX or MIN are used, the entry must meet all other qualifications first. In the following example, Hobson has the longest runway. However, it does not qualify because it is not in the [United States]. The entry that will be selected is [Dow].

... WITH COUNTRY = USA, RNWY LENGTH = MAX ...

AFLD NAME	HOBSON	DOBSON	HOWE	DOW
COUNTRY	CANADA	USA	FRANCE	USA
RNWY LENGTH	137ØØ	95ØØ	9ØØØ	1ØØØØ

14. If there is a tie for the minimum or maximum value, you can select between those entries by specifying a further minimum or maximum modifier. A second modifier will be in effect only if there is a tie resulting from the first modifier. In the following example, circle the entries which will be selected by the first modifier. Of the circled entries, which one will be selected by the second modifier? Place a check above that entry.

... WITH RNWY LENGTH = MAX, RNWY WIDTH = MIN ...

AFLD NAME	ABLE	BAKER	CHARLIE	DOBBS	HIBBLER
RNWY LENGTH	1ØØØØ	12ØØØ	125ØØ	1ØØØØ	125ØØ
RNWY WIDTH	15Ø	2ØØ	15Ø	25Ø	2ØØ

MIN and MAX as Computed Attributes

22.

UNIT	131FIS
UNIT LOC	AMARILLO
MDS	F1ØØF
ACFT RDY	19
CRWS RDY	16

Suppose you want to know whether the 131st FIS at AMARILLO has enough crews to man the operationally ready aircraft. You can answer this by determining which of two attributes has a minimum value; the two attributes to be compared are [ACFT RDY] and [CRWS RDY].
either order

23.

UNIT	131FIS
UNIT LOC	AMARILLO
MDS	F1ØØF
ACFT RDY	19
CRWS RDY	16

The values of ACFT RDY and CRWS RDY may be compared within each column, or entry. Therefore, the minimum (or maximum) of these values may be determined for each column, or [entry].

---

24. For a given set of alternate attributes, to specify the one with the maximum value, you would use [MAX] (attribute, attribute, ...); to specify the one with the minimum value, you would use [MIN (attribute, attribute, ...)].

---

27. For all tanker aircraft, we want to know the MDS, and the AVG TKOFF WT or the AVG LAND WT, whichever is lower. Complete the Query.

RETRIEVE ACFT CHAR WITH ACFT CAT = TANKER THEN LIST MDS, [MIN (AVG TKOFF WT, AVG LAND WT)]]

Volume XII: GREATEST and LEAST

2. When an attribute may have more than one value per entry, and the values are numeric, we may not want to print out all the values. We may want to print out only the value which is greatest or, on the opposite extreme, the [least (smallest, etc.)].

---

5. When an attribute has more than one numeric value per entry, you can write a QL statement to find the [greatest] or [least] value for that entry.

either order

---

8. In the table shown below, for which attribute could you find the greatest or least value? [STAGE CRWS RQ]

PLAN IDENT file

PLAN IDENT	1234A	1234B	1235A	1235B
BASIC PLAN	123	123	123	123
MDS	F1ØØA	F1ØØA	B32	B47E
	F1ØØB	F1ØØC	F1ØØD	B58
STAGE CRWS RQ	2Ø	31	16	21
	15	1Ø	14	25

---

33. While attribute = MAX is designed to select the one entry that has the maximum value for the specified attribute, attribute = GREATEST selects one value of the specified attribute for each [entry], and a corresponding [value] for every other attribute that belongs to the same [subset].

---

37. We want to know the plan identifications and all the sustaining phase data available pertaining to the sustaining MDS's with the largest number of total flying hours for each entry in the PLAN IDENT file. Write the Query. Obtain a display in any format.

[RETRIEVE PLAN IDENT WITH TOTAL FLY HRS = GREATEST THEN LIST PLAN IDENT, SUSTAIN MDS, TOTAL FLY HRS, TOT ELAPSED TIME]

2.3.2.3 Reference materials. Aside from the illustrations which are presented on individual frames and the AF documents specifying the location and format of data, the textual program utilizes 36 exhibits external to the programed books. Of these, 35 are bound together in one volume and are used to display diagrams, models, descriptions of data files, etc., that are frequently referenced by the program to avoid unnecessary repetition of material on individual frames. An additional exhibit that is bound separately consists of a series of review panels. The major types of exhibits and their use are described below.

a) Schematic Diagram of Information Flow in the 473L System. This diagram, shown in Figure 1, was prepared as an aid in developing an understanding of the 473L System, in which Query Language is a major mode of data retrieval. This diagram shows the possible flows of information in the 473L System when Query Language is used for data retrieval: it shows the types of input components, the flow of input through the computer to the storage files, and the flow of output data to the output component. This aid is used exclusively in the first part of the program, which presents a brief orientation to the 473L System.

b) Illustrations of Various System Components. These exhibits are intended to facilitate the trainee's orientation to the 473L System.

c) A Description of the Procedural Steps Required to Retrieve Data for a Specified Problem Using Query Language. This exhibit, shown in Figure 2, gives a brief, step-by-step description of the overall process of problem solution, including an initial problem, the operator's actions, the operation of the computer, and the output of data.

d) A Description of the Data Files. This exhibit is used to help orient the trainee to the names of the data files and their general contents. An excerpt from this exhibit is given in Figure 3.

e) Charts Showing the Conceptual Categorization of the Data Files. These charts group the data files according to subject matter (e.g., airfield information, personnel information, etc.) and according to the level of data description (e.g., narrative descriptions, detailed characteristics, index data, etc.). These are used to help the trainee become proficient in accessing the proper file.

f) Sample Tables with an Incomplete Listing of Attributes and Typical Values. These tables are used in the program to develop the trainee's concept of the organization of data stored in the data files. One such table is shown in Figure 4. Shorter excerpts from tables are frequently shown on individual frames.

g) An Example of How Information is Retrieved from the Data Files Using Query Language. This exhibit, shown in Figure 5, illustrates the overall retrieval process by presenting: a sample set of files, including an excerpt (with hypothetical values) from the file from which information is to be retrieved for the solution of a problem; and, the identification of each element of a Query Language statement with the successive selection from these computer storage files of a particular file, particular columns of data, and the desired output data.

h) The Basic Output Directors. This exhibit shows the basic output directors, the output device for each, and the format of output data.

i) Examples of Corrective Action Following Error Messages. As part of the initial orientation to the 473L System, an exhibit is used to illustrate the type of display on the integrated console's CRT display screen for several different types of error, and the action that should be taken in each case to correct the erroneous Query Language statement.

j) Rules, Formats, Examples of Input and Output, and Other Teaching Aids for Special Query Language Functions (such as GCD, SUM, titles, sorts, special directors using the SAVE table, CHECK, and Complex Queries). These exhibits are used to help the trainee learn and discriminate between the different formats and functions of each Query Language function. Examples of these exhibits are Figures 6 and 7.

k) Review Panels. These are intended to be used for a cumulative review of the first 70% of the program (through Volume XIX). They summarize the information taught about the sequencing and functions of the basic Query Language elements, such as the file indicator, the qualifier, etc.; the organization of data in the data files; the output devices and formats; and, the function, format, rules for use, and relation to the other parts of a statement, of specific parts or types of the basic elements, such as attributes, special kinds of attributes (e.g., SUM and GCD), values, etc.

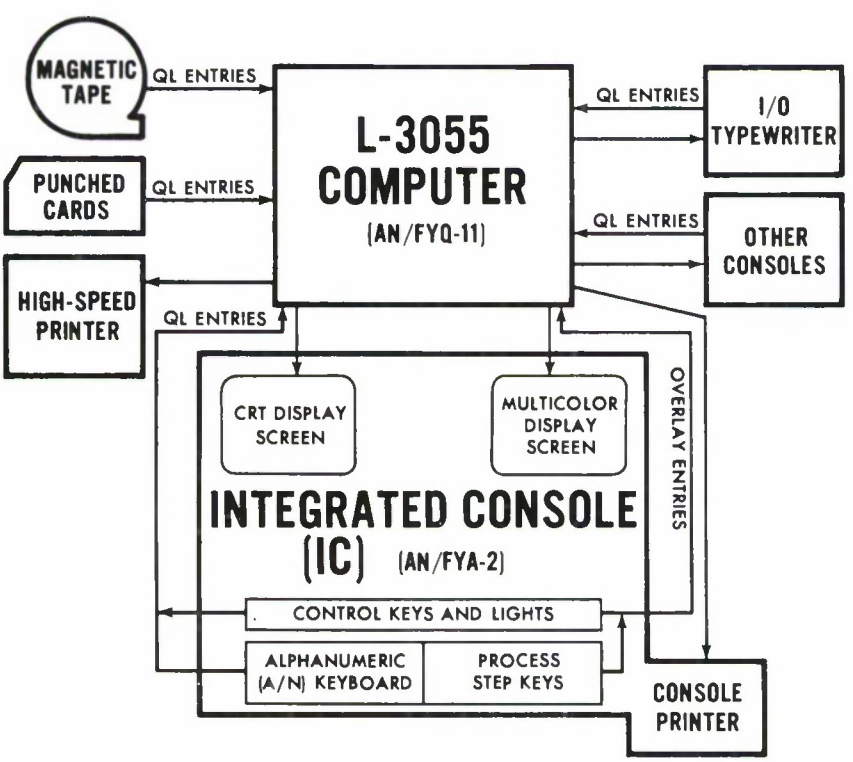

Fig. 1. Schematic diagram of planned information flow in the design for a second-generation 473L System.

Step 1. We define the problem. In this example, we need to find out the names of all airfields with runways of at least 10,000 ft. This information is stored somewhere in the 3055 data files. All we need to do is get it out.

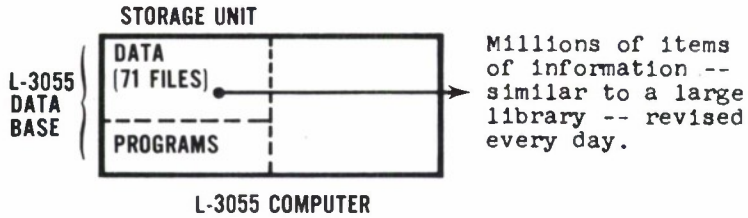

Step 2. The operator selects a program (RETRIEVE) and the correct file (AIRFIELDS) from a description of the data base in specially prepared AF documents.

Step 3. The operator selects the correct attribute names (RNWY LENGTH and AFLD NAME) from a description of the data base.

Step 4. The operator writes a Query Language statement.

```
RETRIEVE AIRFIELDS WITH RNWY LENGTH > 1ØØØØ
THEN LISTV AFLD NAME, RNWY LENGTH ]
```

Step 5. The operator types in the QL entry on the Integrated Console.

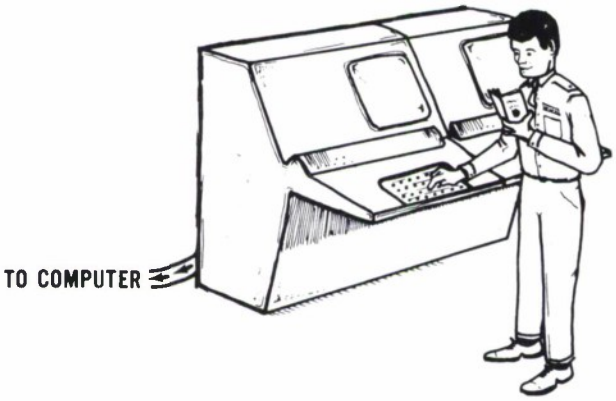

Fig. 2. A description of the proposed procedural steps required to retrieve data for a specified problem using Query Language.

Step 6. The computer selects the RETRIEVE program and starts processing the QL statement.

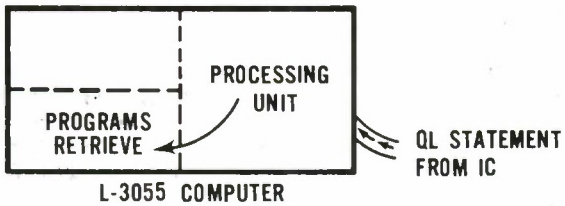

Step 7.

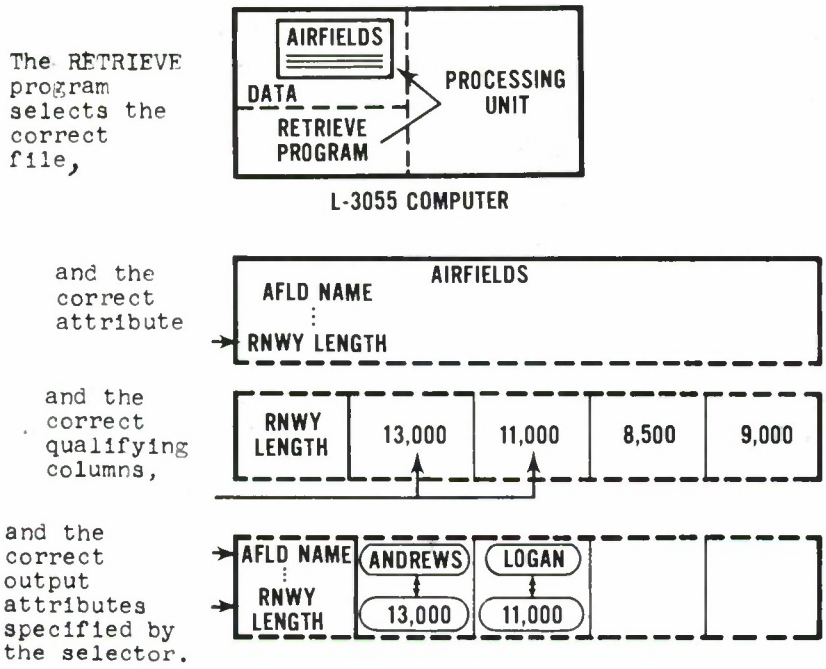

Step 8. The computer sends the output to the selected device (LISTV specifies the CRT display screen of the IC).

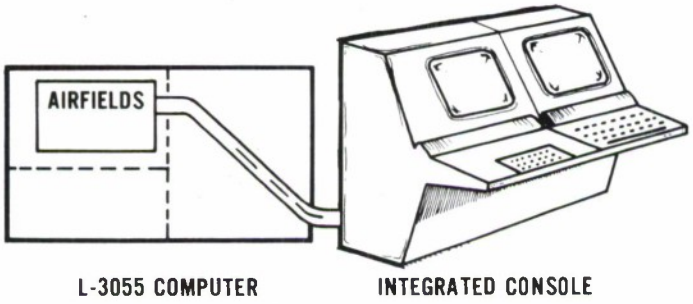

Step 9. The desired data is outputted in the desired format (LISTV specifies vertical format).

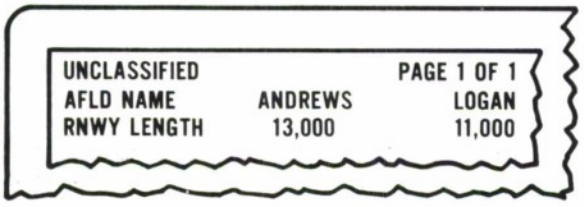

Fig. 2 (cont.)

File Name Abbreviation	File Name Clear	Description
ACFT CHAR	Aircraft Characteristics	Physical, operational, and logistic information on USAF and civilian reserve aircraft.
ACFT MSL MAINT	Aircraft/Missile Maintenance	Schedules for normal and compressed rates of maintenance in a depot for each MDS, and the origin and destination unit of the aircraft.
ACFT PLAN FAX	Aircraft Planning Factors	Factors used in solving operational problems dealing with aircraft/airfield compatibility and traffic compatibility, and the planning for contingencies that involve aircraft and war materiel items.
AFLD CLIM INDEX	Airfield Climatology Reel Index File	Location of current and backup tape reels, and the reel number in which data for a given country is located.
AFLD CLIM REEL	Airfield Climatology Reel File	Climatic data such as temperature, precipitation, and frequency of occurrence of specific ceiling and visibility conditions by month for approximately 3500 airfields.
AIRFIELD INDEX	Airfield Tape Reel Index File	Location of current and backup tape reels, and the reel number in which data for a given country is located.
AIRFIELDS	Airfield Disk File	Basic, frequently used data concerning airfields (rnwy data only for longest runway).
AIRFIELD CLIM	Airfield Climatology File	Monthly meteorological data on airfields in the disk and reel airfield files.
AIRFIELD REEL	Airfield Reel File	All data concerning airfields, including climatology data.
AIRMEN AFSC	Airmen AFSC (Air Force Specialty Code) File	A breakdown of the AFSC's, with the meanings of each part of the code.

Fig. 3. A partial listing and description of the data files.

AIRFIELD REEL*

AFLD NAME		ANDREWS	LOGAN	MACDILL
COUNTRY		USA	USA	USA
STATE		MD	MASS	FLA
AVGAS CAP**		2ØØ	15Ø	18Ø
RNWY LENGTH	1	12ØØØ	1ØØØØ	9ØØØ
	2	11ØØØ	95ØØ	8Ø5Ø
	3	9ØØØ	8ØØØ	75ØØ
	4	6ØØØ		
RNWY WIDTH	1	23Ø	21Ø	19Ø
	2	2ØØ	2ØØ	21Ø
	3	19Ø	18Ø	18Ø
	4	15Ø		
RNWY SFC	1	CONCRT	CONCRT	ASPHALT
	2	CONCRT	CONCRT	CONCRT
	3	ASPHALT	CONCRT	ASPHALT
	4	ASPHALT		
NAVAID		TACAN	TACAN	ILS
FACILITY		AIR/GND	GCA	TOWER
		TOWER	TOWER	

*One difference between the AIRFIELD REEL file and the AIRFIELDS file is that the AIRFIELDS file is on disk and contains runway data for only the longest runway, but the AIRFIELD REEL file is on tape and contains data for all runways.

**Values for AVGAS CAP are in thousands of gallons (K GAL).

Fig. 4. An incomplete table with typical values.

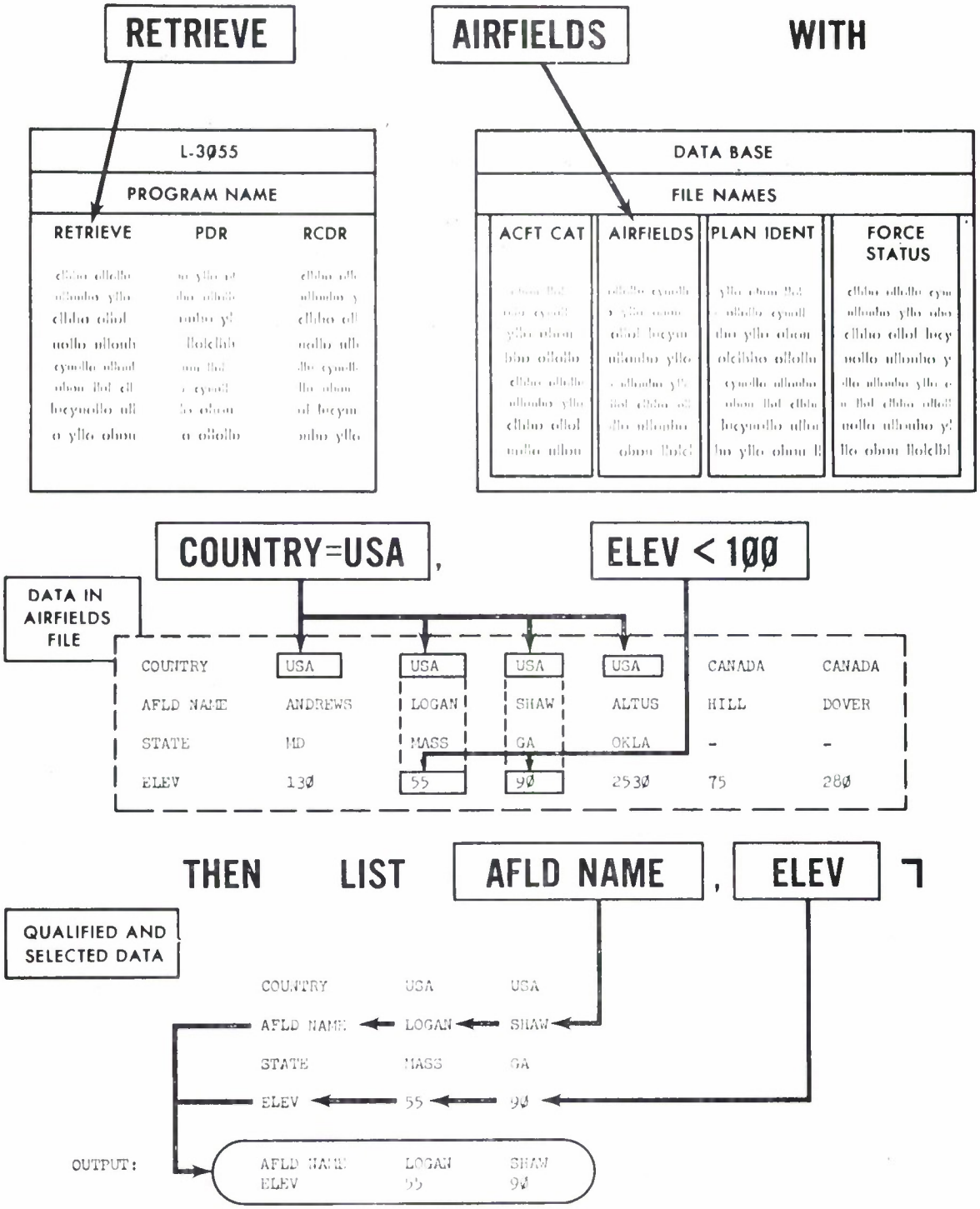

Fig. 5. An example of how information is to be retrieved from the data files using Query Language.

format	functions
a. simple form -- one SUM control attribute and one summed attribute. ... SUM BY SUM control attribute (summed attribute) ... Example ... SUM BY UNIT (ACFT POSS)...	Will sum values of summed attribute for each value of the SUM control attribute.
b. general form -- multiple SUM control attributes and summed attributes. ... SUM BY SUM control attribute BY SUM control attribute BY SUM control attribute (summed attribute, summed attribute, ...) ... Example ... SUM BY UNIT BY MDS (ACFT RDY, CRWS RDY) ...	Will sum values of each summed attribute for every combination of values of the SUM control attributes.
c. short form (no SUM function in the qualifier). ... SUM (summed attribute, summed attribute, ...) ... Example ... SUM (ACFT RDY, ACFT POSS) ...	Will provide a <u>total</u> sum (over all entries that qualify).
d. short form if a SUM function has been specified in the qualifier. ... SUM ... Example ... LISTH UNIT, UNIT LOC, SUM	Outputs sums already computed in the qualifier.

Fig. 6. Formats and functions of SUM in the output selector.

	entry			entry	
POB (C)	PARKERSBURG			SAMPSON	
ITEM (C)	CHAFF RR131			CHAFF RR131	
.	.			.	
.	.			.	
.	.			.	
STORAGE LOC(S)	ARNOLD	MULDOON	VICTORY	ARNOLD	VICTORY
.	.	.	.	.	.
.	.	.	.	.	.
.	.	.	.	.	.
SL ASSET	5000	7000	3000	4000	7000

1. RETRIEVE MATERIEL STATUS WITH ITEM = CHAFF RR131, STORAGE LOC = VICTORY THEN LIST SL ASSET ⌉

output:

SL ASSET	_____	_____

2. RETRIEVE MATERIEL STATUS WITH ITEM = CHAFF RR131, STORAGE LOC = VICTORY THEN LIST SUM (SL ASSET) ⌉

output:

SUM SL ASSET	_____

3. RETRIEVE MATERIEL STATUS WITH ITEM = CHAFF RR131 THEN LIST SUM BY STORAGE LOC (SL ASSET) ⌉

output:

STORAGE LOC	_____	_____	_____
SUM SL ASSET	_____	_____	_____

Fig. 7. Examples of input and output formats for SUM.

2.3.2.4 Program format. Each "frame" consists of two parts, a stimulus panel and an answer panel. A stimulus panel consists of written material, including at least one incomplete statement; missing words or phrases are indicated by blanks. Answer panels contain the missing words or phrases. In some cases, where this appeared appropriate, the missing words or phrases are presented in their appropriate context (from the stimulus panel) on the answer panel.

Stimulus panels, and likewise response panels, are presented three to a page, on sequential pages of bound volumes. Frames that relate to a relatively discrete topic are bound together; thus, separate topics are usually denoted by separate volumes. The sequence of stimulus and answer panels is shown in the schematic on the following page.

2.3.3 Computer Exercises. Although developing proficiency in using the integrated console is not a primary task of the programed text, it was suggested that some experience in actually using the console to retrieve data with Query Language statements would have a motivating affect. In addition, the exercises are to be used to permit trainees to become adept at interpreting and reacting to Error Messages related to Query Language inputs, displayed on the CRT display screen.

The computer exercises are designated for use at points scattered throughout the course. The instructions for these exercises are bound together in an Exercise Book.

2.3.4 Test. Two tests were developed for use in evaluating the Query Language course. One was used during the preliminary tryouts to test the first 70% of the program. The other test is the final posttest, which is cumulative over the entire content of the program; a copy of this test is shown in Appendix B. A copy of the final test answer and scoring key is in Appendix C.

The final posttest is designed primarily to evaluate proficiency in writing Query Language statements; it requires the trainee to write a representative sample of the types of Query Language statements taught throughout the program. This test was used at the completion of the programed course to evaluate the overall effectiveness of the course, and to indicate necessary specific revisions in the program. In the future, this test can be used to evaluate the proficiency of individual trainees. The almost exclusive emphasis in the final test on proficiency in writing Query Language statements reflects both the importance of this objective and the fact that the level of proficiency in writing Query Language statements also reflects, in most cases, the level of proficiency in the subcriterion behaviors.

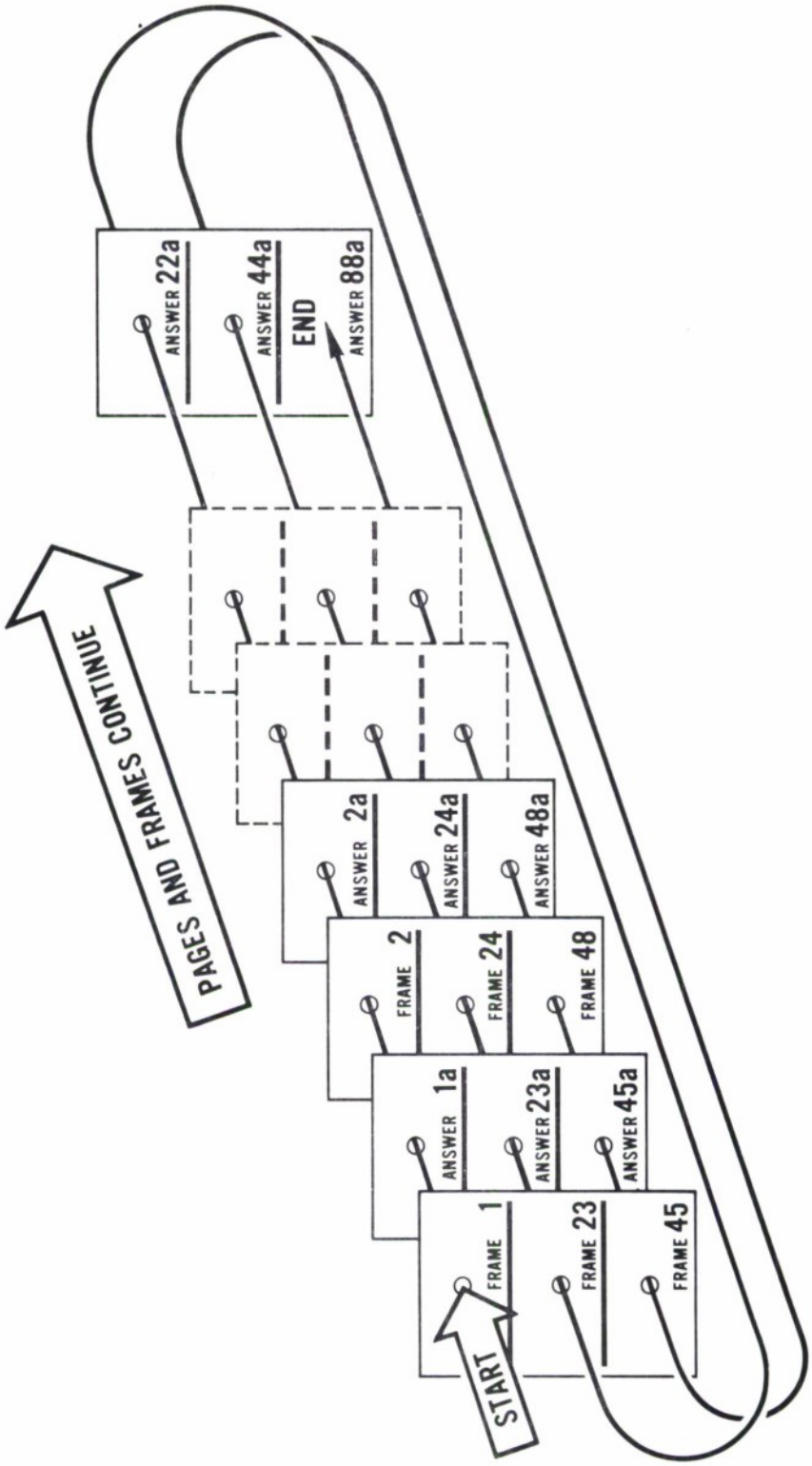
START
FRAME 1
FRAME 23
FRAME 45
ANSWER 1a
ANSWER 23a
ANSWER 45a
FRAME 2
FRAME 24
FRAME 48
ANSWER 2a
ANSWER 24a
ANSWER 48a
PAGES AND FRAMES CONTINUE
ANSWER 22a
ANSWER 44a
END
ANSWER 88a

2.4 THE DRAFTING OF FRAMES, INITIAL PROGRAM TRYOUTS, TECHNICAL REVIEW, AND REVISIONS

Draft frames were based on the initial specification of course objectives, content, and training strategies. As successive portions of the program were completed, they were given preliminary tryouts and a review for technical accuracy, and revised on the basis of the tryout data and technical comments. Due to the evolving nature of Query Language, some changes in frames were also necessitated by changes in the language itself.

Prior to the field tryout on the entire text, there were two preliminary tryouts and revisions. The volumes evaluated in the first tryout constituted about 38% of the final text. The volumes in the second tryout included the volumes used in the first tryout plus additional materials; the total number of volumes in the second tryout amounted to about 70% of the final text. The two preliminary tryouts and revisions are described below.

2.4.1 Subjects. All of the preliminary tryouts were conducted at the Pentagon with a small number of Air Force personnel who were typical of the target population. Four trainees participated in the first tryout. In the second tryout, these trainees took only the materials that had been drafted subsequent to the first tryout; two new trainees took all of the materials that had been drafted up to this point (approximately 70% of the final program).

2.4.2 Results. Since the number of subjects for the preliminary tryouts was small, the results were used for the very limited purpose of revising the programed text. Generalizations to other programed materials are not appropriate.

Percent correct pretest scores for individual trainees were low: the median score for the six trainees participating in the two preliminary tryouts was 2.9%; the range was 0.5% to 10.0%.

For the preliminary tryouts, the average error rate on each draft volume of the programed text (not counting Volume I - the preprogram, for which the error rate was negligible) is given in Table 1 below. The error rates ranged from 3.65% to 24.2%. The median error rate for the draft volumes was 8.5%. As shown, only two out of 14 volumes had an error rate exceeding 10%.

Volumes II through IX were used in draft form in the first tryout; the average error rate on this portion of the program was 8.3%. In addition to the revised volumes II-IX, Volumes X through XIV were used in draft version in the second tryout; the average error rate on draft volumes X-XIV was 7.6%.

TABLE 1

Average Error Rates on Draft QL Volumes That Were Used in the Preliminary Tryouts

First Tryout		Second Tryout	
Volume	Average Error Rate	Volume	Average Error Rate
II	6.6%	X	8.8%
III	8.5	XI	8.1
IV	23.4	XII	4.7
V	9.1	XIII	7.0
VI	9.6	XIV	8.7
VII	3.65		
VIII	24.2		
IX	5.2		

Individual error scores on the first 70% of the draft program and percent correct posttest scores on the test covering this portion of the program are given in Table 2 below for each preliminary tryout.

TABLE 2

Percent Error for Each Trainee on the Program and Percent Correct on the Test for Each of the Preliminary Tryouts

Tryout 1	S_1	S_2	S_3	S_4
Draft Program	9.9%	6.0%	9.9%	7.5%
Test	96%	95%	90%	79%

Tryout 2	S_5	S_6
Draft Program	2.8%	6.2%
Test	92%	88%

The average posttest score for the first tryout was 90% and likewise for the second tryout. In view of the high posttest scores and the fairly low error rates on even the draft volumes -- with a couple of exceptions -- and considering the apparent lack of relationship between program error rates and proficiency on the posttest, revisions were mostly based on the technical review and the critical comments of the trainees.

2.5 FIELD TRYOUT AND REVISION

2.5.1 Design. While the scale of the field test was restricted by the limited availability of personnel representative of the target population, the scale was sufficient since the field test was used exclusively for very specific evaluative and diagnostic purposes: it was used to evaluate the effectiveness of the programed course in terms of the specified objectives, and to diagnose areas of Query Language that trainees had difficulty in learning, for which revisions were required in the training materials.

As previously mentioned, the primary objective of the program is to enable Air Staff personnel to write Query Language statements for the solution of moderately difficult, specified problems. Evaluation of the program's effectiveness in achieving this objective was based exclusively on the trainees' proficiency on the criterion test, which emphasized ability to write Query Language statements.

2.5.2 Subjects. As shown in Table 3 below, seven of the eight trainees had taken the earlier programed course on OTC Query Language, which was the first operational version of Query Language; five had had prior training on either Model I or Model II Query Language; and, three of the trainees had actually participated in the preliminary tryouts with the draft materials covering approximately 70% of the program on Intermediate Query Language, Model II.

TABLE 3

Background Data for Trainees Participating in the Field Tryout

Trainee	Previous Training in OTC QL	Previous Training in either Model I or Model II QL	Participated in the Preliminary Tryouts on the Draft Program for Model II QL
S_1	Yes	Yes	Yes
S_2	Yes	Yes	Yes
S_3	Yes	Yes	Yes
S_4	Yes	Yes	No
S_5	Yes	Yes	No
S_6	Yes	No	No
S_7	Yes	No	No
S_8	No	No	No

Since the structure of Query Language changed greatly from OTC to Model II, the previous training of some subjects in OTC Query was not seen as a serious problem; in fact, in transitioning from OTC Query Language to Query Language, Model II, it is problematic whether transfer of training was positive or negative. In either event, there was an overriding, pragmatic justification

for the selection of these particular trainees to participate in the field tryout: the tryout was utilized by the Air Force as an opportunity to meet current training needs.

All of the trainees completed the programed course on Intermediate Query Language, Model II, but only five took the final test. These were the trainees identified in Table 3 as S_2, S_3, S_5, S_7, and S_8.

2.5.3 Administration of the Field Tryout. The tryout was administered by Air Force personnel. Aside from an initial briefing, direct monitoring was negligible. Work on the course was done at the Pentagon, on a flexible schedule. Other Air Force duties were interpolated, as required, by each individual. Interspersed activities consisted of the trainees' normal duties at the Pentagon in their regular section. Trainees worked on the course an average of 6-1/2 hours per day. Total training time varied from a minimum of five days to a maximum of eight days. Since there was no significant relationship between program error rates and test proficiency in the preliminary tryouts of the program, and since the collection and analysis of program error data is very time-consuming, it was not considered worthwhile (and it was definitely not expedient) to collect program error data. The only data collected from the field tryout were program completion times and percent correct scores on the final test.

After the instructional program was completed, each trainee was given a posttest designed to evaluate his proficiency in writing Query Language statements. As mentioned previously, a copy of this test appears in Appendix B.

2.5.4 Results of the Field Tryout.

2.5.4.1 Completion times for the programed materials. Since interruption of progress on the program to perform other duties was intermittent, recording exact times would have been burdensome. Therefore, the average number of hours per day was estimated, at 6-1/2 hours, and the completion time for each trainee was recorded in terms of the total number of days required to finish the program. The completion time for each individual trainee is shown in Table 4 below. The average number of days for completion was 6.3 days; at 6-1/2 hours per day, this meant an average of roughly 41 hours to complete the program.

TABLE 4

Program Completion Time for Each Trainee

Trainee	Time	Trainee	Time
S_1	6-1/2 days	S_5	7 days
S_2	6 days	S_6	5 days
S_3	7 days	S_7	6 days
S_4	5 days	S_8	8 days

2.5.4.2 Scores on the final posttest. As mentioned previously, the final test was taken by only five of the trainees participating in the field tryout. Scores for individual trainees on the final test are shown in Table 5.

TABLE 5

Percent Correct Scores on Final Test for Individual Trainees Participating in the Field Tryout

S_2	94.6%
S_3	46.5
S_5	80.2
S_7	86.8
S_8	72.4

The average percent correct score on the final test was 76.1%. The median was 80%, with scores ranging from 46.5% to 94.6%. Thus, scores on the field tryout final test were lower than those obtained on the posttest covering 70% of the program, which was used in the preliminary tryouts. The most probable explanation for this is twofold: 1) the last 30% of the program had not previously been tried out; and, 2) the last 30% of the program was intrinsically more difficult, overall, than the first 70%, and the final test was correspondingly more difficult than the posttest used in the preliminary tryouts[5].

2.5.5 Revisions After the Field Tryout. Since time was a critical factor in completing the revisions, revisions were restricted to those based on data from the final test.

The first step in revising the program was to make a few additional technical revisions based on information obtained from Air Force experts on Query Language. Further revisions in the program were based on errors made on the final test. For each item missed on the test, corresponding topical sequences were identified. Appropriate revisions were made in these sequences. The revision based on test errors was considered of critical importance and ample time was devoted to this work in order to adequately revise for all recurrent test errors.

[5]As seen in Table 3, trainees S_2 and S_3 had previously participated in the preliminary tryouts of the draft program; their scores on the test covering the first 70% of the entire program were 90% and 79%, respectively. The substantial drop in S_3's score would seem to indicate that the final test was substantially more difficult (for him) than the posttest used in the preliminary tryouts.

2.6 DISCUSSION AND RECOMMENDATIONS

Generally, the results of the field tryout indicated that the programed course can train to a satisfactory level of proficiency over a period of about six days, using a massed training schedule of roughly 6-1/2 hours per day. Past experience with a similar programed course on OTC Query Language indicated that a training schedule requiring less time per day achieves a slightly higher level of proficiency[6]. Thus, if the immediate need for personnel trained in Query Language is not especially urgent, a spaced schedule of about two to four hours per day would be most desirable. But if immediate training is critical, a massed schedule could be used with only a small penalty expected in terms of the final proficiency level.

For the implementation of this course as a training device, it is recommended that the final test be retained for evaluative and motivational purposes. It is also recommended that the integrated console exercises be used to demonstrate data retrieval for a variety of Queries. While these demonstration exercises would be on the computer, they would not be computer directed. If it is possible to provide the adaptive, computer directed training course described in the next section, this would be recommended in preference to the programed text.

[6] A massed practice group (approximately seven hours per day) scored 84% on the posttest and had an average error rate of 7.8%. A spaced practice group (approximately two hours per day) scored 90% on the posttest and had an average error rate of 5.0%. More detailed data are available in reference 1.

Section III

DEVELOPMENT OF THE OPERATIONAL SPECIFICATION FOR COMPUTER DIRECTED TRAINING

3.1 INTRODUCTION

The rationale for using computer directed training in Query Language was described in Section 1.4.2 of this report. The terminal product of this phase of the project is the Operational Specification for Computer Directed Training in Intermediate Query Language, Model II, for System 473L, February 1966[7]. This operational specification completely describes the training design and the necessary operating procedures for the proposed computer directed training capability. A description of the scope of programming required for the implementation of this capability, and the impact it will have on System 473L operational capabilities is contained in a report prepared by the Federal Systems Division of International Business Machines, Inc.; this report is entitled Computer Directed Training: System 473L Query Language, April 1966[8]. The general conclusion stated in this document, as a result of programming analysis, is that the computer directed training capability would be compatible with System 473L equipment and programming subsystems, can be utilized in a manner similar to that of existing operational capabilities using an overlay, would have little impact on storage requirements for data and programs, and would have no impact on the simultaneous utilization of existing operational capabilities.

The training design and operating procedures were developed with specific reference to the Librascope 3055 computer and Intermediate Query Language, Model II, as they are intended for use in System 473L. However, the specific design described by the operational specification may be used as a model for the development of similar training programs in other command and control systems.

3.2 DEVELOPMENT OF THE OPERATIONAL SPECIFICATION

Each capability of System 473L is described in detail by an operational specification. The general contents and format of a System 473L operational specification are predefined. To ensure that the operational specification for the proposed training capability would meet approved 473L standards, and to provide guidance regarding the feasibility of proposed training features, the developmental process required close interaction between the A·I·R project staff and technical experts on System 473L from the Federal Systems Division of International Business Machines, Inc.

---

[7]This document is reference 4.

[8]This document is reference 5.

The operational specification evolved through predesignated stages, which required the development, revision, and integration of three successive parts: the training design, or training sequence logic; the procedural flow diagram; and the specification of operating procedures.

3.3 DESCRIPTION OF THE OPERATIONAL SPECIFICATION

The following sections briefly describe the training design and the operating procedures for the computer directed training capability. More detailed information is available from reference 4.

3.3.1 The Training Sequence Logic

3.3.1.1 Complexity of the training design. An ideal design for computer directed training would permit maximum interaction between the computer and the individual trainee, including complete analysis of responses and computer generation of all evaluations, directions, problems for individual trainees, and responses to student-generated requests, with all communications in more or less unrestricted English. However, this is not feasible for use with an operational system. In developing the training sequence logic, there was a need to limit the complexity of the training design in order to optimize the feasibility of implementation in terms of a) the need to minimize any possible conflict with other System 473L operational capabilities; b) the cost of developing a computer program to implement the proposed logic; and, c) the cost of training itself -- this would also increase with increasing complexity of the training design.

The major training restrictions imposed to increase the feasibility of computer implementation and reduce cost were:

1) computer analysis of trainee responses on designated parts of QL statements, as opposed to analysis of complete QL statements.

2) the use of "canned" answers (vs computer-generated answers) to problems requiring computer analysis, so that analysis of a trainee's response could be accomplished by a simple matching process.

3) the use of fixed formats for training materials and problems, so that content -- but not format -- changes could be made without a programming change.

4) the use of only one major level of remedial training after each evaluative problem section. Thus, no remedial loop is used to correct errors on a remedial sequence itself.

5) the use of a limited number of evaluation ratings to evaluate a trainee's performance and assign remedial materials. However, the error criteria for the various ratings can be stored in such a way that changes in these criteria would be relatively easy to make if experience so dictates.

3.3.1.2 Provision for adaptation of the capability. Several provisions were made to permit adaptation of the capability for anticipated future changes in the training design and Query Language, and to permit training in an entirely different subject. To achieve maximum flexibility without any programming change, the provisions for adaptation are through data maintenance. Some of the major areas in which data maintenance changes may be made are: the content of any cue -- i.e., the content for any unit of presentation to the trainee; the number of cues within a set; the criteria by which trainee errors are evaluated; and, the remedial continuations for trainee errors.

3.3.1.3 The training sequence logic. The proposed computer directed training capability has three basic uses for training in Query Language, Model II: 1) to train personnel in the use of Intermediate Query Language, Model II; 2) to provide performance data for the trainees and supervisory personnel; and, 3) to provide proficiency maintenance training for trainees who have previously completed this or some other training program in Query Language, Model II.

Salient features of the training sequence logic, designed to optimize training effectiveness and efficiency within the bounds of computer feasibility and cost, include the following: presentation of training materials on the console display screen; computer evaluation of trainee performance based on the number and kind of errors and pre-stored evaluation ratings; computer determination of training areas requiring remedial work for each trainee; computer determination of the specific remedial sequence in each area that is appropriate to the kind and number of trainee errors; and, periodic provision of optional remedial work for trainee selection.

The training course designed for initial use has a built-in research design on the relative effectiveness of forcing trainees to take remedial work appropriate to the number and kind of their errors, in addition to periodic provision of optional remedial work (called Research Group "A"), as opposed to the provision of optional remedial work only (called Research Group "B"). This comparison would provide some of the information needed to make revisions in the training logic that would improve the overall effectiveness and efficiency of the computer directed training course.

Except for the remedial materials, whose presentation is contingent on trainee errors and/or selection, the sequence of training materials is fixed. The initial training sets provide

a basic orientation to the use of the instructional materials, the use of the console, the data files accessed by Query Language, the overall structure of Query Language statements, and the use of the Air Force Manuals that describe the general nature and contents of each data base file and the vocabulary used to reference the file contents. Subsequent sets provide extensive and cumulative training and evaluation on the use of Query Language to retrieve desired information from the data files. The Query Language topics covered by the computer directed training course are designed to progress in the order specified by Appendix D of this report.

Any deviation from the main training path for the computer directed training course is contingent on the trainee's performance and/or his own optional selection of remedial materials. The main training path and the remedial branches are shown in the Training Sequence Logic Flow Diagram, Figure 8. Explanatory notes for this logic on a general level are given in the paragraphs below.[9]

The Training Sequence Logic Flow Diagram shows the main training sequence for all cues (individual units of presentation to the operator), points requiring a decision by the operator, points requiring computer evaluation of a trainee's performance, points requiring computer determination of any necessary branching, all remedial training paths, and points at which data printouts occur.

To facilitate understanding of the Training Sequence Logic Flow Diagram, a condensed outline of the basic training sequence and remedial branches is presented below.

Basic Training Sequence	X SETS (5 sets) LX-PX -- Eval	Y SETS (20 sets) LY-PY Eval-PEY*-Free Choice Review *PEY not avail after Posttest PY
Remedial Branches for Excess Errors	A FIXED SEQ FROM LAST LX (ONE SEQ, REGARDLESS OF TYPE OF ERRORS)	ONE OR MORE REMEDIAL SEQUENCES APPROPRIATE TO 1) THE PARTICULAR AREAS IN WHICH ERRORS WERE MADE AND 2) THE NUMBER OF ERRORS MADE

[9]For a complete explanation of all points on this diagram, the reader is referred to reference 4, the Operational Specification for Computer Directed Training in Intermediate Query Language, Model II, for System 473L.

NOTES: The cues used by this capability may be divided into two major classes: (1) the cues that provide a basic foundation for the course but do not teach Query Language; these cues are divided into sets called "X" SETS; and (2) the subsequent cues that cover all aspects of intermediate QL; these cues are divided into sets called "Y" SETS.

1) The X SETS COVER BASIC, NON-QL MATERIALS:
   a) the use of the instructional materials
   b) the use of the console and the CDT overlay
   c) a basic introduction to the files and structure of QL
   d) the use of the manuals covering the QL data base and system vocabulary

2) The Y SETS cover all training and evaluation materials provided on the use of Query Language -- i.e., all materials not covered by X SETS

3) For any X SET:
   LX = training sequence -- a section within the X SET
   PX = series of problems on the LX -- a section within the X SET
   Eval = evaluation of errors on the PX section

4) For any Y SET:
   LY = training sequence -- a section within the Y SET
   PY = series of problems on one or more of the preceding LY's -- a section within the Y SET
   Eval = evaluation of errors on each area of QL subjected to analysis by the last PY section
   PEY = series of free-form practice exercises (which the trainee answers with complete QL statements and on which he receives feedback). This is a section within each of the Y SETS except the last -- this is not available after the posttest
   Free-Choice Review = at end of each Y SET, the trainee has the option of taking review on any area subjected to analysis by the last PY section

5) Throughout the entire program there are four general types of sets -- the basic, non-QL X SETS and three kinds of QL Y SETS. These sets are described below:
   a) 5 basic, non-QL X SETS
   b) 13 INDEPENDENT Y SETS for each of which the PY section tests only the materials covered by the LY section in the same set
   c) 6 CUMULATIVE Y SETS, used at appropriate points, in which the PY section tests all materials covered after the last CUMULATIVE Y SET
   d) one POSTTEST Y SET: this is the last Y SET, for which the LY section reviews all materials covered in the program and the PY section is the POSTTEST, which tests all the materials covered over all of the Y SETS in the program.

An understanding of the Training Sequence Logic Flow Diagram will also be enhanced by an understanding of cue types. There are two general types of cues used by this capability:

1) Instructional cues. These cues are used primarily to instruct the operator (trainee) in the proper procedure for making a transition from one point in the training sequence to another. These instructional cues usually indicate the available options for continuing, and in some cases they provide feedback to the trainee regarding his performance on the last cue or series of cues. On the Training Sequence Logic Flow Diagram, most of the instructional cues are represented by a cue number, e.g., Q1, enclosed in a circle, and a brief description of the cue's function. Instructional cues that provide an introduction to a sequence of learning cues are specified to the right of the bracket enclosing the series. For example, on page 1 of Figure 8, Q7 is an instructional cue that precedes a series of learning cues (which are, in this case, Q9's).

2) Learning cues. These cues are sequenced so that the trainee will learn the desired criterion behaviors, e.g., how to write a SUM function. On the Training Sequence Logic Flow Diagram, learning cues are differentiated according to their training function and according to their format.

According to its training function, which may change from one part of the training sequence to another, a learning cue is identified as one of the following types: LX, PX, RX, LY, PY, PEY, Text, CUM TEXT, RY, CUM REVIEW, PRACTICE Y, and CUM PRACT PROB. For example, on page 1 of Figure 8, the first series of learning cues is represented by (LX-1) ⋮ (LX-n)

According to its format, a learning cue is identified as one of the following types: Q8, Q9, Q11, Q19, and Q19A. For example, on page 1 of Figure 8, the first series of learning cues is identified as a series of Q9's preceded by an instructional cue (Q7).

The different types of training functions for learning cues will now be explained. The learning cues used by this capability are logically and sequentially divided into two major groups:

1) The non-QL learning cues. These cues provide a basic foundation for the course but do not teach Query Language itself. They are divided into the sets called "X" SETS, which precede all other learning cue sets used by this capability. Thus, on page 1 of Figure 8, the first series of learning cues have an X subscript, which identifies them as non-QL learning cues.

2) The QL learning cues. These cues provide trainees with all training and evaluation materials that are needed in order to learn to use Intermediate Query Language, Model II; these cues

are divided into the sets called "Y" SETS. Thus, on page 2 of Figure 8, the first series of learning cues have a Y subscript, which identifies them as QL learning cues.

In each non-QL X SET, learning cues may be further subgrouped according to their sequence and function. There are two major sections of learning cues in each X SET:

1) An LX section. This is a sequence of cues (Q9's) used primarily for training. Each LX section has two subsections: a) the initial series that provides basic training, and b) the final series that reviews the information taught in the first section.

2) A PX section. This is a sequence of cues (Q8's) used primarily for evaluation of the trainee's proficiency on the information covered in the preceding LX section.

In each X SET, these two sections are followed by computer error-analysis of the trainee's responses on the PX cues and, if necessary, appropriate remedial work.

Learning cues may also be subgrouped in each Y SET according to their sequence and function. There are three major sections of learning cues in each Y SET:

1) An LY section. This is a sequence of cues (Q9's) used primarily for training. Each LY section has three subsections, in this general order: a) the basic training sequence, called a TEXT sequence; b) the sequence that reviews the information taught by the TEXT sequence -- this is called a REVIEW sequence; and c) a series of cues that emphasize the development of QL statements for specified data retrieval problems. This series is intended to give the trainee practice in using the QL elements taught in the TEXT and REVIEW sequences. This is called a PRACTICE PROBLEM sequence.

2) A PY section. This is a series of cues (Q11's) used primarily for evaluation of the trainee's proficiency on the information in one or more of the preceding LY's. The complexity of the computer error-analysis on each problem is minimized by the restriction of error-analysis to specified parts of the appropriate QL statement.

In each Y SET, these two sections are followed by computer error-analysis of the trainee's responses on the PY cues and, if necessary, appropriate remedial work. There are three levels of remedial work, appropriate to three evaluation-ratings, GOOD, AVERAGE and POOR. In general, remedial work for a rating of POOR is excerpted from a TEXT subsection of an LY section; remedial work for a rating of AVERAGE is excerpted from a REVIEW subsection of an LY section; and, remedial work for a rating of GOOD is excerpted from a PRACTICE PROBLEM subsection of an LY section. Since remedial work in an area is forced on

a trainee in Experimental Group A if his PY errors on that area were excessive, any remedial sequence taken at this point is called a FORCED REMEDIAL sequence.

3) Following the error-analysis and any necessary remedial work for a Y SET is a PEY section. This is a series of cues (Q19's and Q19A's) that give the trainee practice in developing complete QL statements for specified problems, with feedback to the trainee indicating the correct QL statement for each problem presented. This section is not used for computer evaluation; it is only used for a trainee's self-evaluation. Since the trainee's answers in this section are not evaluated by the computer, the answer format used by the trainee does not constitute a problem for error-analysis. Therefore, the trainee types the entire QL statement as his answer, not just the restricted excerpts required for his answers in the PY section. Since these cues provide practice in writing QL statements and the answer formats are not artificially restricted by the length of the answer required, these cues are called free-form practice exercises.

For each Y SET, after these three sections are complete, the trainee is given the option of taking remedial work in one or more areas for which the trainee's responses in the last PY section were evaluated. Since remedial work at this point is taken only by free-choice and consists of REVIEW materials from one of the last LY sections, a remedial sequence that the trainee chooses to take at this point is called FREE-CHOICE REVIEW. As noted earlier, this is the only remedial work available to Experimental Group B.

As mentioned previously, the X and Y SETS are different in terms of their position in the overall training sequence and their general training functions: X SETS are placed first and emphasize non-QL topics; Y SETS are last and emphasize the use of QL elements. Cue sets may also be differentiated in terms of their general training function and the overall scope of their training-and-evaluation materials. In terms of function and scope, there are four types of sets:

All of the X SETS are of one type:

1) Non-QL PRETEST sets. These precede the QL materials that are tested by the final posttest; in each set, the PX section tests only the materials covered by the LX section in the same set.

The Y SETS include three different types of sets:

2) QL, INDEPENDENT sets. In each set, the LY section teaches new materials, and the PY section tests only the materials covered by the LY section in the same set.

3) QL, CUMULATIVE sets. In each set, the LY section reviews the materials covered in the INDEPENDENT sets that followed the last CUMULATIVE set, and the PY section tests all materials covered after the last CUMULATIVE Y SET.

4) The QL, POSTTEST set. In this set, the LY section reviews the materials covered throughout all of the sets. The PY section is the posttest, which tests all materials covered over all of the other Y SETS in the program. It is, in effect, the end-of-course criterion test.

The entire program consists of the following sets, in the order described:

1) five non-QL, PRETEST X SETS
2) a series of 13 QL INDEPENDENT Y SETS, with six QL CUMULATIVE Y SETS interpolated at appropriate points in the overall sequence
3) one QL, POSTTEST Y SET.

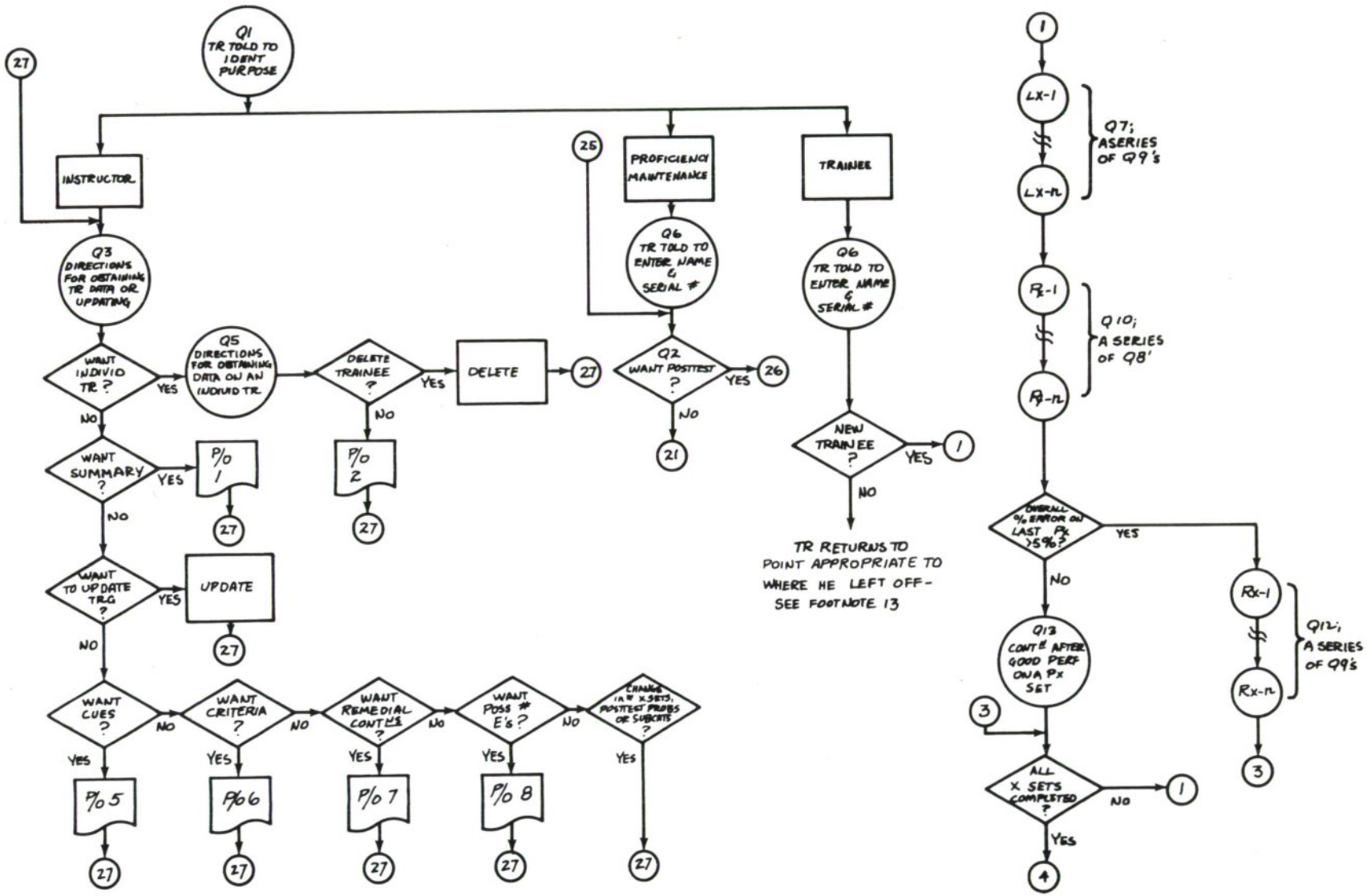

Fig. 8. The training sequence logic flow diagram for computer directed training. (sheet 1 of 4)

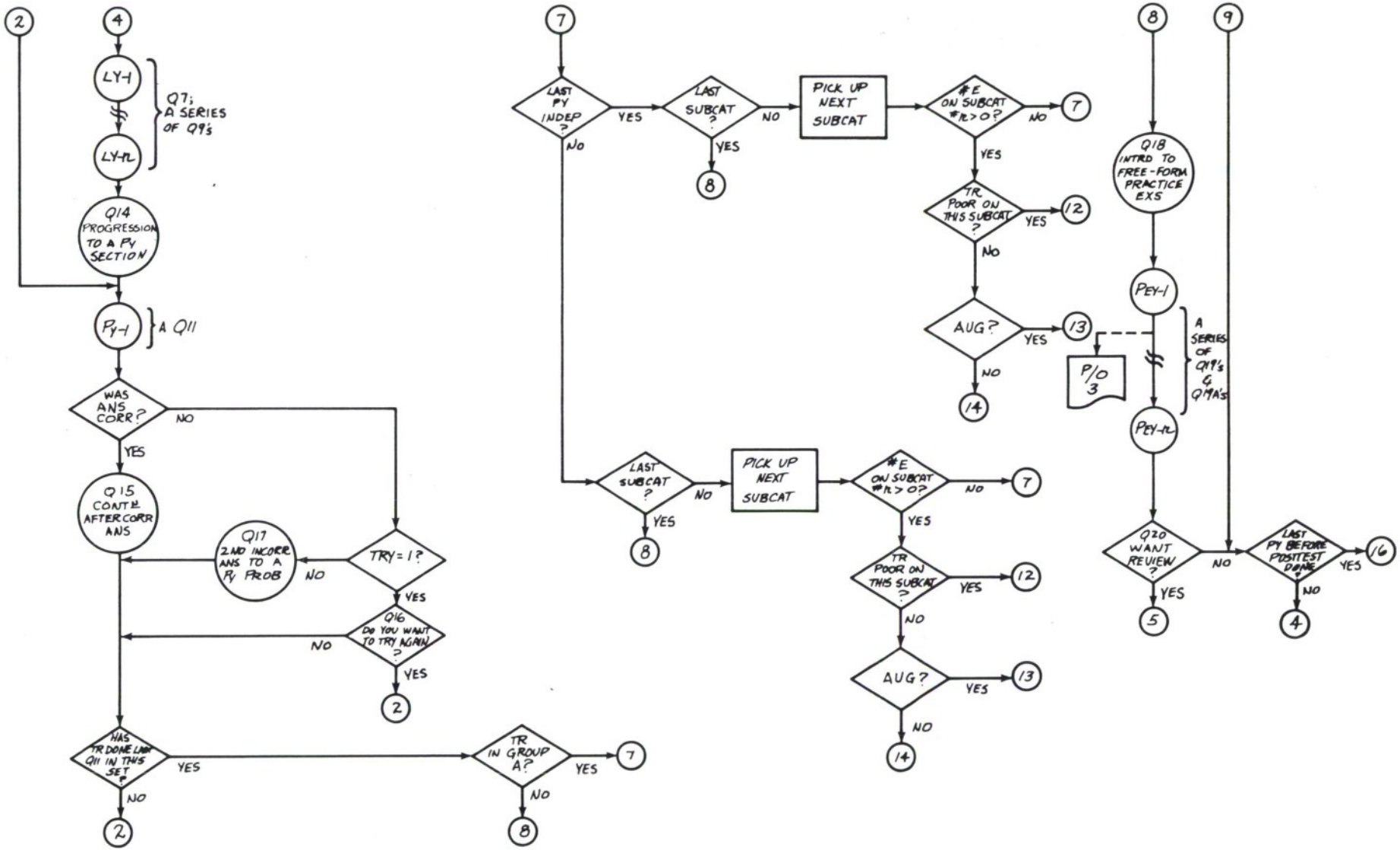

Fig. 8. The training sequence logic flow diagram for computer directed training. (sheet 2 of 4)

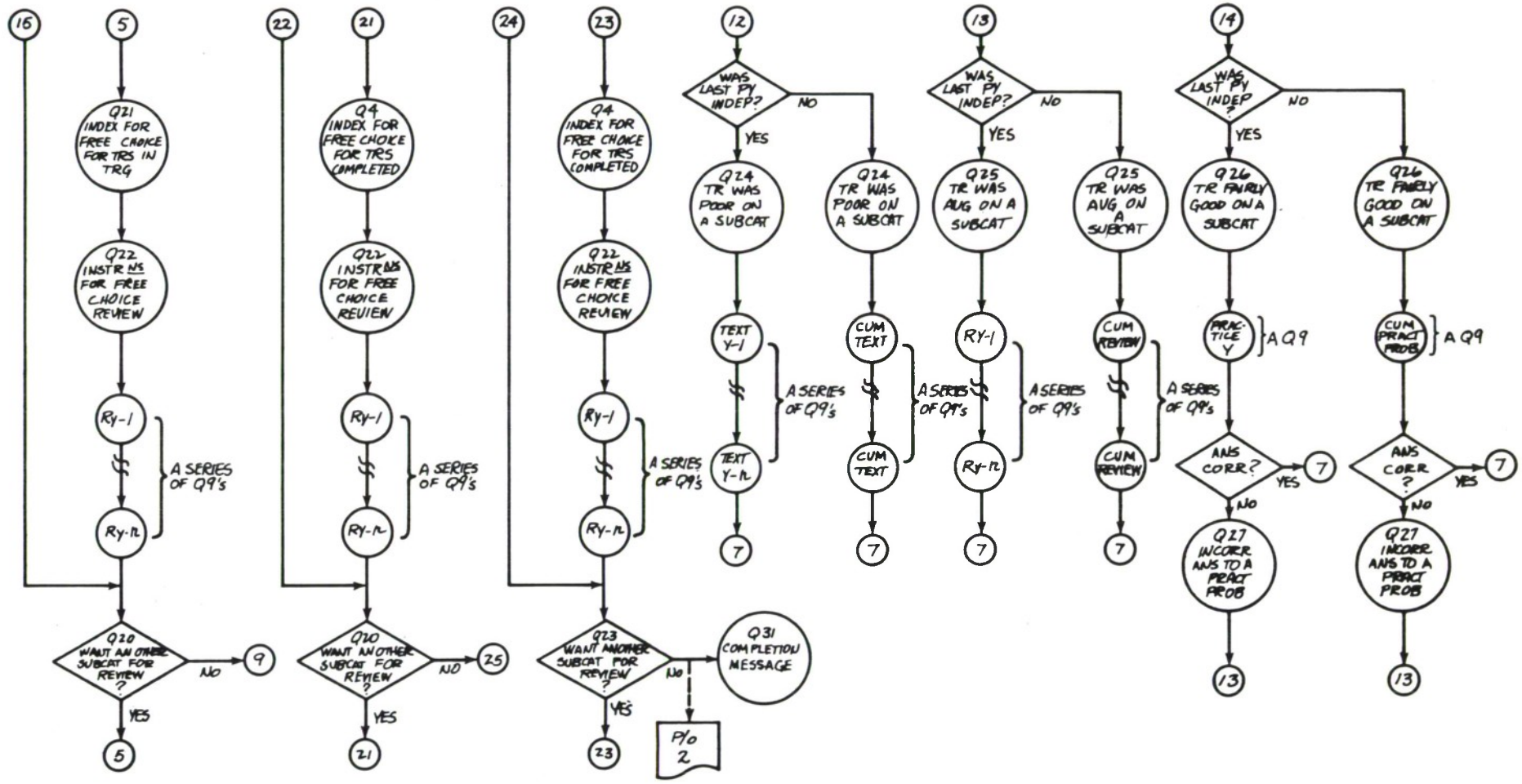

Fig. 8. The training sequence logic flow diagram for computer directed training. (sheet 3 of 4)

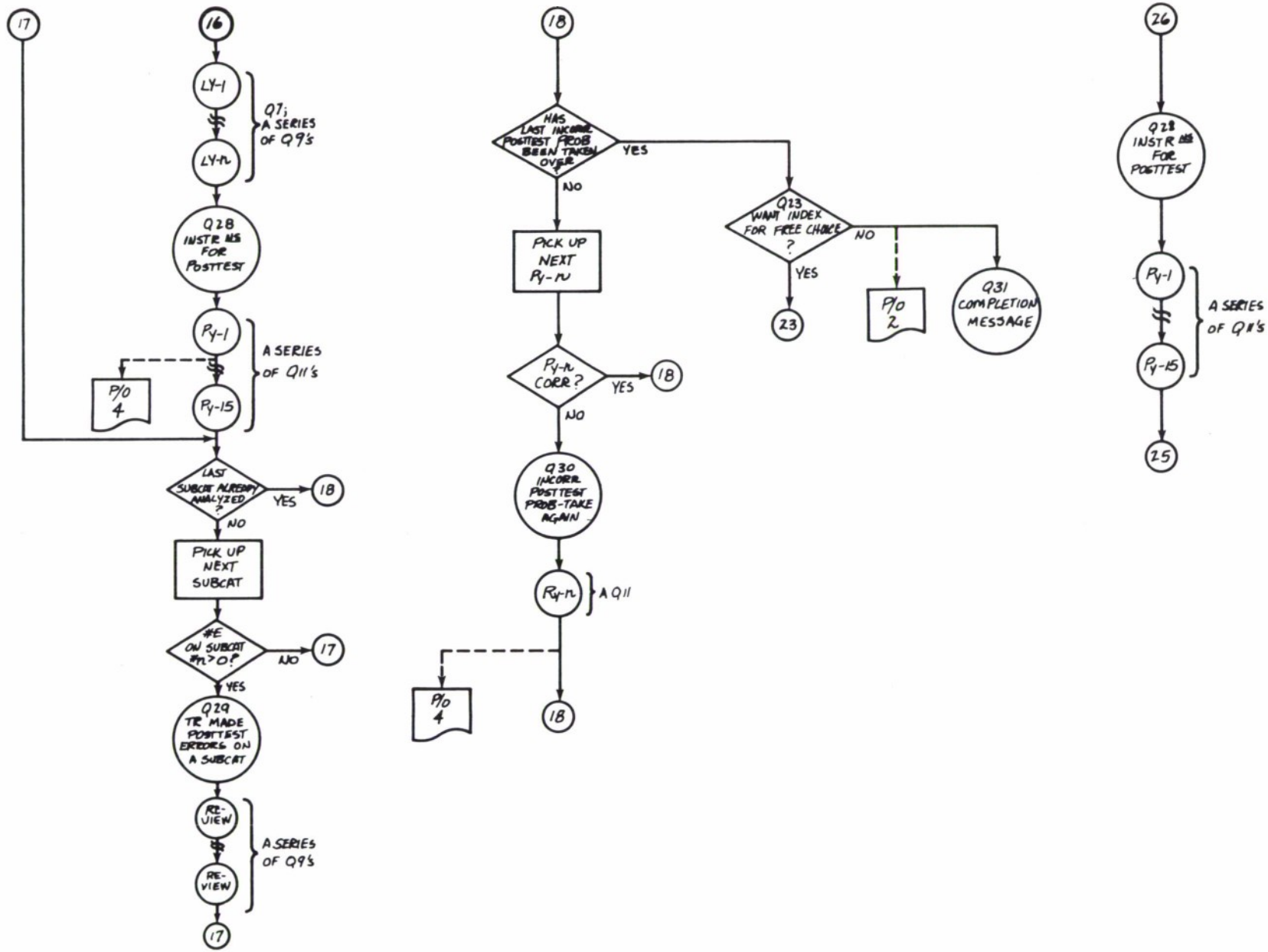

Fig. 8. The training sequence logic flow diagram for computer directed training. (sheet 4 of 4)

The proposed program will provide evaluative data that are more extensive than that generally obtained by non-computer-based training studies. Such data will make it possible to relate various features of the program to performance measures. The evaluative data that will be made available consists of the following items:

1. Summary data for all trainees who have completed the program at any time
   a. the date
   b. the total number of trainees who have completed the program
   c. the total number of trainees still in progress on the program
   d. the average time to complete the program: for Experimental Group A and for Experimental Group B
   e. the average percent error on the program: for Experimental Group A and for Experimental Group B
   f. the average percent error on the posttest: (1) on the first try and (2) on the final (second) try: for Experimental Group A and for Experimental Group B
   g. the average percent error on each subcategory of QL: (1) averaged over all evaluative problems except the posttest for Experimental Group A and for Experimental Group B; and, (2) averaged over the posttest for all trainees.

2. Individual trainee data for any trainee except a proficiency maintenance trainee, updated for any point during training and the final, updated data at the time the trainee completes the program
   a. the date on which the data is obtained
   b. the trainee's name, serial number, and experimental group (A or B)
   c. the cumulative training time for the trainee (at the time these data are obtained)
   d. the trainee's average percent error over all evaluative problem sections requiring QL compositions except for the posttest
   e. the trainee's average percent error on the posttest: (1) for the first try on each problem; and, (2) for the final (second) try on each problem
   f. the trainee's average percent error on each of the initial problem sections that do not require composing QL statements
   g. for each posttest problem: (1) the number of tries; (2) the possible number of errors; (3) the number of errors the trainee made on the first try; (4) the number of errors the trainee made on the second (final) try
   h. for each QL subcategory: (1) the average percent error for the trainee over all QL-evaluative problem sections except the posttest (i.e., during <u>training</u> on Query Language); (2) the average percent error

for the trainee on the posttest; (3) the number of times the trainee chose that subcategory for free-choice review over the entire program

i. the trainee's sequence of remedial materials for the last 20 training sets, identified as either forced remedial or free-choice and further identified by the point at which these materials were taken (i.e., identified by the evaluative problem section immediately preceding each remedial set), the subcategory for which they were given, and the trainee's rating on that subcategory. Since the trainee's use of any remedial sequence for one of the initial, non-QL problem sections can be determined by whether his percent error on that section exceeded 5% and since there is only one remedial sequence for each of the non-QL problem sections, the trainee's path through the X SETS is already determined. Since the basic (vs. remedial) training sequence of the Y SETS is known, the above information will complete the set of information needed to determine the trainee's entire path through the program, and his location at any time prior to completion.

3. The complete QL statements typed by each trainee as answers to the data-retrieval problem in the practice exercises.

4. The complete QL statements typed by each trainee as answers to the posttest problems and the parts of these statements, as typed by the trainee, that underwent error analysis.

The comparison between Experimental Groups A and B plus an analysis of the various types of data made available, as described above, would not only provide information needed to make revisions in the training logic that would improve the overall efficiency and effectiveness of the computer directed training (CDT) program, but such information would also increase the general level of knowledge with respect to the potential role of computer-based instructional systems in the military environment. Thus, if the CDT program is shown to be an effective teaching instrument, this computer directed training capability could be used advantageously for teaching the use of other System 473L capabilities and as a general model for application to training for other computer-based systems.

3.3.2 Operating Procedures and the Procedural Flow Diagram. Any operator-processor communication for System 473L requires knowledge of the integrated console operating procedures. These are described in an Air Force document, 473L-OS-43: Operational Specification for the Integrated Console, Model II. In addition, each capability will employ a separate overlay that, when used with the integrated console process step keys, will present to the operator the capability options. The function of each process step key associated with the overlay for the computer directed training capability is shown in Table 6 of this report.

TABLE 6

Design for Computer-Directed Training Overlay
Process Step Key Functions (Page 1 of 3)

Key Designation	Function
L1 TRAINEE	This key signals the program that the operator wants to start or continue training on the CDT program. When this key is pressed, the Name and Serial Number Entry cue (Q6) appears on the display screen.
L2 INSTRUCTOR	This key signals the program that the operator wants to either obtain trainee data (for printout or deletion) or to update training materials. When this key is pressed, the Directions for Obtaining Data or Updating cue (Q3) appears on the display screen.
L3 PROFICIENCY MAINTENANCE	This key signals the program that the operator wants some of the CDT materials that are available for proficiency maintenance. When this key is pressed, the Name and Serial Number Entry cue (Q6) appears on the display screen.
L7 SUMMARY	This key signals the program that the operator wants P/O 1, the line printer printout of Summary Data for all trainees (except proficiency maintenance trainees). When this key is pressed, printout #1 will be printed out.
L8 INDIVIDUAL TRAINEE	This key signals the program that the operator wants to obtain data for an individual trainee, either on a printout or for deletion. When this key is pressed, the Directions for Obtaining or Deleting Data on an Individual Trainee cue (Q5) appears on the display screen.
L9 UPDATE TRAINING MATERIAL	This key signals the program that the operator wants to update some of the training materials (i.e., the content of some of the cues).
L10 FREE CHOICE	This key signals the program that the operator wants to take remedial work in one or more areas. When this key is pressed, either the Index for Free-Choice Review for Trainees Who Have Not Completed the Program (Q21) or the Index for Free-Choice Review for Trainees Who Have Completed the Program (Q4) will appear on the display screen, depending on whether the trainee has completed the posttest or not.

TABLE 6 (cont.)
(Page 2 of 3)

Key Designation	Function
L11 POSTTEST	This key signals the program that a proficiency maintenance trainee wants to take the posttest (the very last PY section, in the last set, Y = 20). When this key is pressed, the first cue in the posttest (a Q11) will appear on the display screen.
L12 TRY AGAIN	This key signals the program that the operator wants to take the last-presented problem again. When this key is pressed, the last problem in the PY section being worked on, which is a problem cue requiring computer error-analysis of the trainee's answer(s) (a Q11), will re-appear on display screen.
L13 ERROR MATRIX	This key signals the program that for updating purposes, the instructor wants to obtain P/08, the Possible Number of Errors on Each Subcategory for Each PY Section; on Each PX Section; and on Each Posttest Problem. When this key is pressed, printout #8 will be printed out on the line printer.
L14 EVALUATION CONTINUATION MATRIX	This key signals the program that for updating purposes, the instructor wants to obtain P/07, Remedial Continuations. When this key is pressed, printout #7 will be printed out on the line printer.
L15 CUE FILE MATRIX	This key signals the program that for updating purposes, the instructor wants to obtain P/05, Cues (the contents for all cues). When this key is pressed, printout #5 will be printed out on the line printer.
L16 CRITERIA MATRIX	This key signals the program that for updating purposes, the instructor wants to obtain P/06, Criteria. When this key is pressed, printout #6 will be printed out on the line printer.
L17 FLEX COURSE	This key signals the program that for updating purposes, the instructor wants to obtain P/09, FLEX COURSE, which specifies the number of PRETEST (X) SETS, the number of POSTTEST problems, and the number of subcategories. When this key is pressed, printout #9 will be printed out on the line printer.

TABLE 6 (cont.)
(Page 3 of 3)

Key Designation	Function
L25 CONTINUE	This key signals the program that either the operator does not wish to exercise any special training options available at this time or, none are available. When this key is pressed, the next cue that is available in queue (without branching out to pick up cues that are not presently stacked up) will appear on the display screen. The type of cue that is presented will vary from one training point to another.
L27 SKIP	This key signals the program that the operator does not wish to complete the remedial sequence on which he is now working. When this key is pressed, the trainee will be sent to the same continuation point that he would have reached had he completed the remedial sequence: if the trainee is still in training on the CDT program and he has not yet taken the posttest, or if he is a proficiency maintenance trainee, Q20 will appear on the display screen; if the trainee has just completed the CDT program including the posttest, Q23 will appear on the display screen.
L29 TERMINATE TRAINING	This key signals the program that the trainee is going to stop work on the CDT program at the present time. When this key is pressed, Q32 will appear on the display screen, and the storage of data for a trainee on the work done so far on a set will continue until storage is complete.

A diagram of the training sequence in terms of the presentation of specific cues and capability options is given in the Procedural Flow Diagram for the Computer Directed Training Capability. This may be referenced in the Operational Specification for Computer Directed Training in Intermediate Query Language, Model II, for System 473L[10].

[10] See reference 4.

3.4 DISCUSSION AND RECOMMENDATIONS

The techniques for a computer directed training program briefly described here, and more fully described in the Operational Specification, are sufficiently general as to be applicable to other programs of training in artificial languages that are relatively fixed in format and vocabulary (such as computer languages). However, it is recognized that other computer systems may not have available the type of equipment for which this program was designed. The only major feature of the instructional system that may not be commonly available on other systems is the overlay keyboard. The overlay system on the integrated console was not originally designed to perform an instructional function, but it provides an excellent opportunity for permitting limited control of the instructional process by the trainee and increases the scope of interaction at the computer interface. However, this overlay keyboard is not essential for a computer directed training capability. The functions performed with the overlay could be simulated by outputs on a display screen or typewriter providing a trainee with choices that would have been indicated on the overlay. Although this method may be less economical, it would still be functional.

It is felt that the major advantages of the CDT instructional system are the periodic analysis of the trainee's input and the selection of appropriate remedial materials based on this analysis, the extensive capabilities for output data, and the introduction of some learner control over the selection of training materials. The latter feature would be especially valuable for a proficiency maintenance training sequence, where individual needs would vary greatly.

Proficiency maintenance is a particularly critical training problem with command and control systems where there is a need for highly proficient personnel at all times but where there is little opportunity for actual practice in real or simulated situations. It would be possible to expand the computer directed training course described here to provide frequent realistic combat exercises and to provide, on the basis of an analysis of errors made, a series of training exercises uniquely designed to build proficiency in weak areas. This approach could also be generalized to other command and control systems where proficiency must always be at a maximum but where actual practice may be at a minimum.

Looking further into the future, it would be possible to build into a CDT program appropriate statistical tests that would determine the effectiveness of the program as measured against appropriate criteria of terminal performance. With initial entrance data (e.g., initial aptitude, IQ, etc.) and performance data collected at appropriate points throughout the program, statistical computations could be performed after an appropriate N of trainees had been obtained. The results of such an analysis may suggest changes in the program, e.g., a

new organization of the materials and/or a shift in the parameters used for deciding on the frequency and nature of the correctional training sequences. Adjustments of this sort could be accomplished automatically and internally by the computer itself. Such a training system would be truly adaptive in that it would adjust its own training strategy based on the measured success of the program being used. For example, in the program described in this report, the two experimental groups (A and B) could be compared in an analysis of variance design and if one group was always inferior, that group could be discarded, or, if a significant interaction was found between the experimental group and some other variable, e.g., some background factor, a decision logic could be internally prepared for deciding who got the "A" condition and who got the "B" condition. For example, perhaps it would be shown by the analysis that trainees with previous experience with computer languages should be given the program allowing self choice (i.e., optional remedial sequences), whereas those trainees with no previous experience in the field should be given the "lock-step" program (i.e., the program with forced remedial sequences). Entering trainees, in this case, would be asked to indicate this information and would be assigned by the computer to the appropriate program.

Other relevant "questions" of this kind could be "asked" in an effort to devise CDT systems that achieve a truly optimal relationship between level of proficiency and time in training.[11] These approaches are within the present "state-of-art." They are expensive and they are yet to be proven by the test of practical experience. In spite of the fact that computer-directed training is still in an experimental, neophyte phase, the military may provide the only feasible environment in which the effectiveness of such approaches can be demonstrated. The existence and availability of large capacity computers, the number of men to be trained, the complexity of the subject matter, the difficulty of obtaining qualified instructors, and the critical nature of the training requirements, all exist in the context of military training as perhaps in no other sector of the training world. As has happened in so many other areas, a significant general advance in the technology of training could be initiated in support of military requirements. The impact of such an advance on both military and civilian training would be hard to overestimate. The implementation of the CDT program described in this report would be an important step in this direction. Further refinements of the approach described here, applications to other military training problems, and inclusion of more sophisticated strategies such as have been suggested in this section of the report, would represent a program of both short- and long-term value to military and civilian training".

[11] See reference #6.

REFERENCES

1. Clapp, Doris J., Yens, D. P., Shettel, H. H., & Mayer, Sylvia R. Development and evaluation of a self-instructional course in the operational training capability Query Language for System 473L, U. S. Air Force Headquarters. Bedford, Mass.: Air Force Electronic Systems Division, Decision Sciences Laboratory, 1964. (Tech. Doc. Report No. ESD-TDR-64-662)

2. Self-instructional course in OTC Query Language, Volumes I-XXIII. Bedford, Mass.: Air Force Electronic Systems Division, Decision Sciences Laboratory, 1964. (Tech. Doc. Report No. ESD-TDR-64-443)

3. Self-instructional course in Mod II Query Language, Volumes I-XXIX. Bedford, Mass.: Air Force Electronic Systems Division, Decision Sciences Laboratory, 1966. (Tech. Report No. ESD-TR-66-513)

4. Clapp, Doris J., Shettel, H. H., & Mayer, Sylvia R. Operational specification for computer directed training in Intermediate Query Language, Model II, for System 473L, U. S. Air Force Headquarters. Bedford, Mass.: Air Force Electronic Systems Division, Decision Sciences Laboratory, 1966. (Tech. Report No. ESD-TR-66-252)

5. Schiff, J. D., Chenevert, M. L., & Bennett, W. F. Computer directed training: System 473L Query Language. Bedford, Mass.: Air Force Electronic Systems Division, Decision Sciences Laboratory, 1966. (Tech. Report No. ESD-TR-66-261)

6. Shettel, H. H., Yens, D. P. Developing a computer-directed program to teach a computer language. National Society for Programmed Instruction Journal, 1966, 5, No. 1.

APPENDIX A

Number of Frames in Each Volume of the Program[12]

	Volume Number	Section of Program	Number of Frames
First Tryout	I	Preprogram	34
	II	General Orientation	133
	III	Organization of Information in the Data Files	43
	IV	Selection of the Proper File Indicator	21
	V	Selection of the Correct Attributes and Values Using the Data File Contents Manual	51
	VI	Writing Simple Query Language Statements - The Simple Qualifier	88
	VII	Writing Simple Query Language Statements - Writing the Output Director and Output Selector	55
	VIII	Writing Query Language Functions - Special Features of the Qualifier	67
	IX	Writing Query Language Functions - Special Features of the Selector	64
Second Tryout	X	GCD Functions	64
	XI	MIN and MAX Functions	137
	XII	GREATEST and LEAST	51
	XIII	Simple SUMs	118
	XIV	More on SUM	62
	XV	Titles	18
	XVI	Sorting	58
	XVII	Compound Qualifiers	46
	XVIII	SAVE Procedures	68
	XIX	CHECK	8
	XX	Review and Practice of II-XIX	73
	XXI	Use of the Data Control Manuals and Complex Queries	98
	XXII	Complex Queries - Computed Attributes and Special Uses	74
	XXIII	Final Practice	17
	TOTAL NUMBER		1448

[12] There were no frames in Volumes XXIV through XXIX; these volumes contained reference or test materials only.

APPENDIX B

Final Test*

ALL MANUALS, EXHIBITS, AND REVIEW PANELS MAY BE USED.

A. General Information

1. For what purpose is the 473L system designed?

2. Determine what file indicator you would use to obtain the following information (you may use Exhibits 2N, 3A and 3B):
   a. Specific data concerning current materiel inventory
   b. The types of aircraft possessed by TAC
   c. Detailed characteristics of tactical aircraft
   d. The selection of a specific plan that fits certain requirements

3. Label the following outputs with the appropriate output director.

UNIT	MDS	AFLD NAME	ANDREWS	AMARILLO	TRUAX
23FIS	F86A	STATE	MD	TEX	WIS
	F1ØØF	RNWY LENGTH	12ØØØ	135ØØ	9ØØØ
	F1Ø4B		11ØØØ	1ØØØØ	85ØØ
113FIS	F1ØØB		9ØØØ	95ØØ	7ØØØ
	F1Ø1C			8ØØØ	
	F1Ø5D				

4. In the Query below, use brackets and labels to indicate:
   a. The program indicator
   b. The file indicator
   c. The qualifier
   d. The output director
   e. The output selector
   f. The qualifier conjunction
   g. The output director conjunction
   h. Modifiers
   i. Attributes
   j. Comparators
   k. Values

RETRIEVE PLAN IDENT WITH PLAN CAT = EX,

VUN PLAN IND = NO THEN PRINT PLAN IDENT,

TYPE OP, START DATE]

*To save space, answer blanks are omitted in this reproduction of the test.

APPENDIX B (cont.)

5. Identify with arrows the points at which CHECK could be inserted in the following QL statement.

RETRIEVE AIRFIELDS WITH COUNTRY = CANADA

THEN PRINT AND COUNT AFLD NAME * AFLDS IN

CANADA *

6. Match the following:

____AND a. commas between modifiers
____OR b. semicolons between modifier sets

7. Select the correct statements about SUM.
   a. Only one SUM expression may be used in a QL qualifier.
   b. Only one SUM expression may be used in a QL selector.
   c. If more than one SUM expression is used in a QL statement, all SUM expressions must have (or represent) the same set of SUM control attributes.
   d. If more than one SUM expression is used in a QL statement, all SUM expressions must have (or represent) the same set of summed attributes.
   e. A SUM function used in one subordinate query of a complex Query Language statement automatically applies to all subordinate Queries in the statement.
   f. A SUM function used in one modifier set of a compound qualifier automatically applies to all modifier sets of the compound qualifier.
   g. The only SUM expression that may be retained is SUM, referencing a SUM already computed in the qualifier.

B. Problems

Write the appropriate Query Language statements for the problems below (you may refer to any manuals or Exhibits).

1. Write a Query to print out the entire UNIT/LOC STRNGTH file, sorted in descending alphabetic order according to the name of the installation. Specify also that the following SUMs are to be printed out:
   a. for each LSA, the number of U. S. citizens.
   b. for the entire file, the total number of U. S. citizens.

2. You are checking the data files to determine whether some information has been omitted. Determine which planned operating bases have no values for ITEM in the files. Request a horizontal printout.

3. Obtain the plan idents of all exercise plans that require C119A aircraft and are scheduled to start on or between 1 June 1966 and 15 July 1966. Use a horizontal display.

4. Store a Query which will print out the number of authorized weapons systems for a force (UNIT, UNIT LOC, MDS and COMD) to be specified at a later time. Leave room for other attributes in the selector.

5. Write a Query to display the numbers of any SAVEd statements pertaining to F1Ø5G entries in FORCE STATUS.

6. Make the necessary entries to complete this Query for Barclay Air Force Base. Add the title "Barclay Status Data" to the output.

```
RETRIEVE MATERIEL STATUS WITH POB = '1' THEN PRINT ALL
INCOMPLETE QUERY - TO COMPLETE TYPE INSERT NUMBER AND =
SYMBOL FOLLOWED BY:
    ADDITIONAL ATTRIBUTES
    ADDITIONAL VALUES
    OTHER PORTIONS OF QUERY STATEMENT AS DESIRED.
START FOR EACH NUMBER IN STATEMENT OR ERASE COMPLETE
INSERT NUMBER (E.G., '3'). TYPE EOM AFTER LAST INSERT.
CHECK PUNCTUATION AND FORMAT BEFORE PRESSING ENTER.
(1 = '
```

7. Write a Query to select either airfields in Canada that are no more than 500 nautical miles away from Hill and can land or depart (whichever is lower) at least 10 aircraft per hour under IFR conditions or airfields in the United States that are no more than 35Ø nautical miles from KANSAS CITY and have the above arrival/departure restrictions. Specify a horizontal printout of airfield names, the country, the GCD from both airfields, and the number of aircraft that can be landed or departed (labeled MIN ARR/DEP).

8. Write a Query to print out the names and GCD's from Bailey of all airfields that are no further from Bailey than Peterson is from Wallace. Eliminate Bailey, Peterson, and Wallace from being selected.

9. Write a Query to find the LOG ABSTRACTS annex to plan 32111 and print out the annex plan ident and the abstract. Also, a count of the number of and the plan idents of other plans using this annex is desired. Specify a printout.

10. Write a Query to select the medical plan(s) with the fewest total number of patients per day to be moved from the collect bases. Specify a vertical display of the plan ident, the total number of patients per day to be moved, and all strategic data related to the route segment requiring the fewest number of AME crews per day at the staging base.

APPENDIX B (cont.)

11. Write a Query to find the closest airfield to SEMHOI (excluding SEMHOI) that is a POB for at least 10,000 pounds of gaseous nitrogen. Obtain a vertical display of the airfield name, the GCD from SEMHOI, and the amount of gaseous nitrogen intended for use there.

12. Write a Query to find those FORCE STATUS entries with minimum ready weapons systems of at least 10. Entitle the minimum RDY WP SYS. Specify a vertical display of the force and the weapons system.

13. Write a Query to find the total amount of jet fuel stored at Parkersburg (regardless of the POB of the fuel) and those airfields in logistics subarea 3A capable of storing at least that much jet fuel. Specify a horizontal listing of the amount of jet fuel stored at Parkersburg, the names of the qualifying airfields, their GCD's from Parkersburg, and their jet fuel capacities.

14. Write a Query to display the number of airfields in the United States having all navigational aids either available or estimated and having at least 1 of the lighting facilities either available or estimated.

15. Write a Query to find all plan idents, the POB's, the MDS's, and the number of airmen deployed from a POB and MDS set (such as F105G's at Bailey) when at least 1000 airmen are to be deployed from a set and the POB is in the United States or when at least 1000 men are to be deployed from a set and the airmen are from an RFG unit. Specify a sort in ascending order according to MDS.

16. Write a Query to find the minimum authorized weapons system of B52A's for the 81BW unit of TAC at Parkersburg (entitled WPSYS AUTH) and those plans which require no more crewed B52A's than the authorized weapons system. Specify a horizontal display of the weapons system, and the plan idents of qualifying plans.

APPENDIX C

Final Test Scoring and Answer Key

Scoring of QL Statements on the posttest is based on:

1. Program director -- 1 point
2. File indicator -- 1 point
3. WITH -- 1 point
4. Each modifier -- 1 point
5. THEN -- 1 point
6. Output director -- 1 point
7. Each phrase in selector* -- 1 point
8. Punctuation and spelling of entire QL statement -- 1 point

* A phrase may consist of a single attribute, a computed attribute, an attribute = INCR/DECR, or a SAVE instruction. For example,

```
...THEN LIST AND COUNT AFLD NAME, GCD, GCD (BEALE),
SUM AND TOTAL BY AFLD NAME (RNWY LENGTH = INCR), MIN (MAX IFR ARR,
MAX IFR DEP), TITLE = MIN TRAFF, *CALIFORNIA AIRFIELD INFO*
SAVE BY SMITH 1966 ¬
```

would be worth 12 points.

Since most Query Language problems can be solved in more than one way, it is important that the test be scored by someone knowledgeable in Query Language. Each Query should first be assigned a number of possible points, according to how the student attempted to solve the problem, and then points subtracted for the items missed. For example, if a student wrote the Query

```
RETRIEVE AIRFIELDS WITH AFLD NAME = PETERSON THEN RETAIN GCD (WALLACE):
RETRIEVE AIRFIELDS WITH AFLD NAME ≠ BAILEY AND PETERSON AND WALLACE,
GCD (BAILEY<[R1, GCD (WALLACE), OR] THEN PRINT AFLD NAME, GCD (BAILEY)¬
```

for question number 8, he would receive 17 possible points, and lose two: 1) for using AND's in the AFLD NAME ≠ modifier, and 2) he would lose his punctuation and spelling point for using parentheses around WALLACE in the value [R1, GCD WALLACE, OR].

It will be necessary, for each student, to total the possible points and the correct points and compute his percentage.

TEST ANSWER KEY

A. General Information	Points
1. provide information needed for decision-making	1
2. a. MATERIEL STATUS	1
b. FORCE STATUS	1
c. TACTICAL CHAR	1
d. PLAN IDENT	1
3. LISTH OR PRINTH OR, HORIZONTAL	1
LISTV OR PRINTV OR, VERTICAL	1
4. In the Query below, use brackets and labels to indicate:	
a. The program indicator	
b. The file indicator	
c. The qualifier	
d. The output director	11
e. The output selector	
f. The qualifier conjunction	
g. The output director conjunction	
h. Modifiers	
i. Attributes	
j. Comparators	
k. Values	

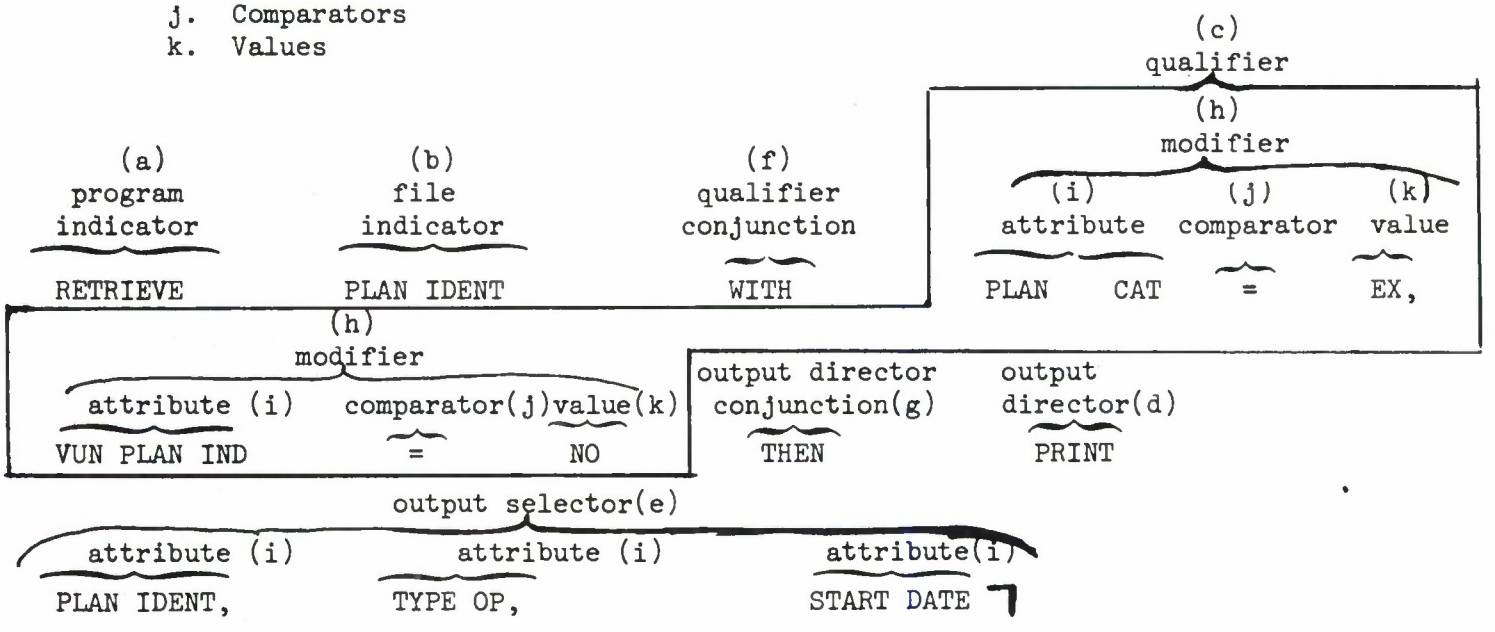

5. RETRIEVE AIRFIELDS WITH COUNTRY = CANDA THEN

PRINT AND COUNT AFLD NAME *AFLDS IN CANADA* 6

		Points
6.	a	1
	b	1
7.	a.	1
	b.	1
	c.	1
	d.	1
	e.	1
	f.	1
	g.	1

B. Problems

1.	RETRIEVE UNIT/LOC STRNGTH THEN PRINT INSTALLATION = DECR, ALL, SUM AND TOTAL BY LSA (TOTAL US CIVILS)¬	8
2.	RETRIEVE MATERIEL STATUS WITH ITEM = BLANK THEN PRINTH POB¬	8
3.	RETRIEVE PLAN IDENT WITH PLAN CAT = EX, MDS = C119A, START DATE > Ø1JUN66 AND < 15JUL66 THEN LISTH PLAN IDENT ¬	10
4.	RETRIEVE FORCE STATUS WITH UNIT = ?, UNIT LOC = ?, MDS = ?, COMD = ? THEN PRINT MIN (CRWS AUTH, ACFT AUTH), ? SAVE ¬	13
5.	FIND FORCE STATUS, F1Ø5G ¬	4
6.	RETRIEVE MATERIEL STATUS WITH POB = '1' THEN PRINT '2' ¤	2
	(1 = 'BARCLAY 2 = 'ALL *BARCLAY STATUS DATA*' ¬	2
7.	RETRIEVE AIRFIELDS WITH COUNTRY = CANADA, GCD (HILL < 5ØØ), MIN (MAX IFR ARR, MAX IFR DEP) > 1Ø, TITLE = MIN ARR/DEP; COUNTRY = USA, MIN (MAX IFR ARR, MAX IFR DEP) > 1Ø, TITLE = MIN ARR/DEP, GCD (KANSAS CITY < 35Ø) THEN PRINTH AFLD NAME, COUNTRY, GCD, MIN ARR/DEP ¬ (OR PRINTH AFLD NAME, SAME ¬)	18
8.	RETRIEVE AIRFIELDS WITH AFLD NAME ≠ BAILEY OR PETERSON OR WALLACE, GCD (BAILEY < GCD (PETERSON, WALLACE)) THEN PRINT AFLD NAME, GCD ¬	9

		Points
9.	RETRIEVE PLAN IDENT WITH PLAN IDENT = 32111 THEN RETAIN LOG ABST IDENT: RETRIEVE LOG ABSTRACTS WITH PLAN IDENT = [R1, LOG ABST IDENT, OR] THEN PRINT PLAN IDENT, LOG ABSTR: RETRIEVE PLAN IDENT WITH LOG ABST IDENT = [R1, LOG ABST IDENT, OR] THEN PRINT AND COUNT PLAN IDENT ¬	24
10.	RETRIEVE MED PLAN RQMT WITH SUM BY PLAN IDENT (COLLECT CSU RQMT = MIN), STAGE AME RQMT = LEAST THEN LISTV SUM, RTE ID = GROUP ¬	10
11.	RETRIEVE MATERIEL STATUS WITH POB ≠ SEMHOI, ITEM = NITRO GAS, TOTAL ASSETS > 1ØØØØ THEN RETAIN POB: RETRIEVE AIRFIELDS WITH AFLD NAME = [R1, POB, OR], GCD (SEMHOI = MIN) THEN RETAIN AND LISTV AFLD NAME, GCD: RETRIEVE MATERIEL STATUS WITH ITEM = NITRO GAS, POB = [R2, AFLD NAME, OR] THEN LISTV TOTAL ASSETS ¬	28
12.	RETRIEVE FORCE STATUS WITH MIN (CRWS RDY, ACFT RDY) > 1Ø, TITLE = RDY WP SYS THEN LISTV COMD, UNIT, UNIT LOC, MDS, RDY WP SYS ¬	13
13.	RETRIEVE MATERIEL STATUS WITH ITEM = JET FUEL, STORAGE LOC = PARKERSBURG THEN RETAIN AND LISTH SUM (SL ASSET): RETRIEVE AIRFIELDS WITH LSA = 3A, JET FUEL CAP > [R1, SUM SL ASSET, AND] THEN LISTH AFLD NAME, GCD (PARKERSBURG), JET FUEL CAP ¬	20
14.	RETRIEVE AIRFIELDS WITH COUNTRY = USA, NAVAID FACILITY = TOWER AND APPROACH AND VOR AND TACAN AND VORTAC AND RBN AND AIR/GND AND DF AND GCA AND ILS, LTG FACILITY = ANY THEN COUNT ¬	9
15.	RETRIEVE PERS DEPLOY STAT WITH SUM BY MDS BY POB (TOTAL ORG-AMN > 1ØØØ), CRTY/STATE = USA; ORG KIND = RFG THEN LIST SUM = INCR, PLAN IDENT ¬	11
16.	RETRIEVE FORCE STATUS WITH COMD = TAC, UNIT = 81BW, MDS = B52A, UNIT LOC = PARKERSBURG THEN RETAIN AND LISTH MIN (ACFT AUTH, CRWS AUTH), TITLE = WPSYS AUTH: RETRIEVE PLAN IDENT WITH MDS = B52A, CRWD ACFT RQ < [R1, WPSYS AUTH, AND] THEN LISTH PLAN IDENT ¬	21

APPENDIX D

Sequence and Contents of the Computer Directed Training Sets

	SET	CONTENTS
X SETS ..	A	A brief introduction to the use of the console and the CDT overlay; use of the instructional materials; use of the CDT Exhibit Book.
	B	More detailed coverage on the use of the console and the CDT overlay.
	C	The computer component and the input and output devices of the 473L System; the file structure and the types of data storage utilized by System 473L; basic methods of data retrieval with System 473L; more on the use of the console and the CDT overlay.
	D	Basic elements of a QL statement; introduction to Error Messages; use of the AF manuals covering the QL data base and system vocabulary; more on the use of the CDT Exhibit Book.
	E	More on the use of the AF manuals covering the QL data base and system vocabulary; more on the use of the CDT Exhibit Book; more on the use of the console and the CDT overlay.
INDEP Y SETS ..	F	The Simple Qualifier
	G	Basic instruction on writing the Output Director and Output Selector
CUM Y SET ..	H	Review of F and G
INDEP Y SETS ..	I	Special features of the qualifier
	J	Special features of the selector
CUM Y SET ..	K	Review of I and J
INDEP Y SETS ..	L	GCD functions
	M	MIN and MAX functions
CUM Y SET ..	N	Review of L and M
INDEP Y SETS ..	O	More on MIN and MAX functions
	P	GREATEST and LEAST, and Review of MIN and MAX
CUM Y SET ..	Q	Review of O and P
INDEP Y SETS ..	R	Simple uses of SUM
	S	More complex uses of SUM
CUM Y SET ..	T	Review of R and S
INDEP Y SETS ..	U	Titles and Sorting and Compound Qualifiers
	V	SAVE Procedures and CHECK
CUM Y SET ..	W	Review of U and V
INDEP Y SET ..	X	Complex Queries
POSTTEST Y SET ..	Y	Review and Practice of Sets F through X, and the Posttest

Unclassified

Security Classification

DOCUMENT CONTROL DATA - R&D

(Security classification of title, body of abstract and indexing annotation must be entered when the overall report is classified)

1. ORIGINATING ACTIVITY *(Corporate author)* American Institutes for Research Pittsburgh, Pennsylvania	2a. REPORT SECURITY CLASSIFICATION Unclassified 2b. GROUP N/A

3. REPORT TITLE DEVELOPMENT AND EVALUATION OF SELF-INSTRUCTIONAL TEXTS AND AN OPERATIONAL SPECIFICATION FOR COMPUTER DIRECTED TRAINING IN INTERMEDIATE QUERY LANGUAGE, MODEL II FOR SYSTEM 473L, U.S. AIR FORCE HEADQUARTERS

4. DESCRIPTIVE NOTES *(Type of report and inclusive dates)*
Final Report

5. AUTHOR(S) *(Last name, first name, initial)*
Slough, Doris Clapp
Yens, David P.
Northrup, Judi L.
Shettel, Harris H.

6. REPORT DATE October 1966	7a. TOTAL NO. OF PAGES 65	7b. NO. OF REFS 6
8a. CONTRACT OR GRANT NO. AF 19(628)-2935 b. PROJECT NO. 7682 c. TASK: 768204 d.	9a. ORIGINATOR'S REPORT NUMBER(S) ESD-TR-66-637 9b. OTHER REPORT NO(S) *(Any other numbers that may be assigned this report)* None	

10. AVAILABILITY/LIMITATION NOTICES

Distribution of this document is unlimited.

11. SUPPLEMENTARY NOTES	12. SPONSORING MILITARY ACTIVITY Decision Sciences Laboratory, Electronic Systems Division, Air Force Systems Command, USAF, L. G. Hanscom Field, Bedford, Mass. 01730

13. ABSTRACT

This report summarizes the development and evaluation of a programed, self-instructional course for on-the-job training of Air Staff personnel in the use of Intermediate Query Language, Model II. This is an information retrieval language used with the computer based, Air Force command and control system, System 473L. In addition, it describes a computer directed training capability that was designed specifically to use System 473L itself to effectively and efficiently provide training in Query Language. The report describes the need for on-the-job training and the rationale for a computer directed training capability to provide this training. It describes the development of the programed text, the text itself, and the effectiveness of the text materials based on tryout data. Finally, a description of the proposed computer directed training course is given, with emphasis on the training design. The 473L System configuration using the AN/FYQ-11 computer, towards which this study was oriented, will not be implemented for the Headquarters U. S. Air Force Command and Control System. However, this design study for the training subsystem may be of interest to researchers on computer-directed instructional systems.

DD FORM 1 JAN 64 1473

Unclassified

Security Classification

Unclassified

Security Classification

14. KEY WORDS	LINK A ROLE	LINK A WT	LINK B ROLE	LINK B WT	LINK C ROLE	LINK C WT
Automated Training Subsystem Information Systems Self Instruction Course Programed Learning OJT Man-Computer Communication Computer Directed Instruction						

INSTRUCTIONS

1. ORIGINATING ACTIVITY: Enter the name and address of the contractor, subcontractor, grantee, Department of Defense activity or other organization *(corporate author)* issuing the report.

2a. REPORT SECURITY CLASSIFICATION: Enter the overall security classification of the report. Indicate whether "Restricted Data" is included. Marking is to be in accordance with appropriate security regulations.

2b. GROUP: Automatic downgrading is specified in DoD Directive 5200.10 and Armed Forces Industrial Manual. Enter the group number. Also, when applicable, show that optional markings have been used for Group 3 and Group 4 as authorized.

3. REPORT TITLE: Enter the complete report title in all capital letters. Titles in all caaes ahould be unclassified. If a meaningful title cannot be selected without claasification, show title classification in all capitals in parenthesis immediately following the title.

4. DESCRIPTIVE NOTES: If appropriate, enter the type of report, e.g., interim, progress, summary, annual, or final. Give the inclusive dates when a specific reporting period is covered.

5. AUTHOR(S): Enter the name(s) of author(s) aa shown on or in the report. Enter last name, first name, middle initial. If military, show rank and branch of service. The name of the principal author is an absolute minimum requirement.

6. REPORT DATE: Enter the date of the report aa day, month, year, or month, year. If more than one date appears on the report, use date of publication.

7a. TOTAL NUMBER OF PAGES: The total page count should follow normal pagination procedures, i.e., enter the number of pages containing information.

7b. NUMBER OF REFERENCES: Enter the total number of references cited in the report.

8a. CONTRACT OR GRANT NUMBER: If appropriate, enter the applicable number of the contract or grant under which the report was written.

8b, 8c, & 8d. PROJECT NUMBER: Enter the appropriate military department identification, such as project number, subproject number, system numbers, task number, etc.

9a. ORIGINATOR'S REPORT NUMBER(S): Enter the official report number by which the document will be identified and controlled by the originating activity. Thia number muat be unique to this report.

9b. OTHER REPORT NUMBER(S): If the report has been assigned any other report numbers *(either by the originator or by the sponsor)*, also enter this number(s).

10. AVAILABILITY/LIMITATION NOTICES: Enter any limitations on further dissemination of the report, other than those impoaed by security classification, using standard statementa such as:

(1) "Qualified requesters may obtain copies of this report from DDC."

(2) "Foreign announcement and dissemination of this report by DDC is not authorized."

(3) "U. S. Government agencies may obtain copies of this report directly from DDC. Other qualified DDC users shall request through

_____."

(4) "U. S. military agencies may obtain copies of this report directly from DDC. Other qualified users shall request through

_____."

(5) "All distribution of this report is controlled. Qualified DDC users shall request through

_____."

If the report has been furnished to the Office of Technical Services, Department of Commerce, for sale to the public, indicate this fact and enter the price, if known.

11. SUPPLEMENTARY NOTES: Use for additional explanatory notes.

12. SPONSORING MILITARY ACTIVITY: Enter the name of the departmental project office or laboratory sponsoring *(paying for)* the research and development. Include address.

13. ABSTRACT: Enter an abstract giving a brief and factual summary of the document indicative of the report, even though it may also appear elsewhere in the body of the technical report. If additional space is required, a continuation sheet shall be attached.

It is highly desirable that the abstract of classified reports be unclassified. Each paragraph of the abstract shall end with an indication of the military security classification of the information in the paragraph, represented as *(TS)*, *(S)*, *(C)*, or *(U)*.

There is no limitation on the length of the abstract. However, the suggested length is from 150 to 225 words.

14. KEY WORDS: Key words are technically meaningful terms or short phrases that characterize a report and may be used as index entries for cataloging the report. Key words must be selected so that no security classification is required. Identifiers, such as equipment model designation, trade name, military project code name, geographic location, may be used as key words but will be followed by an indication of technical context. The assignment of links, rules, and weights is optional.

GPO 886-551

Unclassified

Security Classification

DEPARTMENT OF THE AIR FORCE
HEADQUARTERS ELECTRONIC SYSTEMS DIVISION (AFSC)
LAURENCE G. HANSCOM FIELD, BEDFORD, MASSACHUSETTS 01731

REPLY TO ATTN OF: ESE(Mr. O'Brien/5322) 28 March 1967

SUBJECT: Release of Technical Document

TO: ESTIP

Identification: ESD-TR-66-637

ESE has no objection to release of the above-cited document to the Clearinghouse for Scientific and Technical Information.

John T. O'Brien

JOHN T. O'BRIEN
Chief, Public Information Division
Information Office

1 Atch
n/c