UNLIMITED

S & T MEMO 13/50

AD 648612

IGNITION IN HIGH PRESSURE OXYGEN

by

M. GUTER

REPORT OF WORK CARRIED OUT BY THE
BRITISH OXYGEN CO. LTD. UNDER
MINISTRY OF SUPPLY CONTRACT

DDC
MAR 21 1967
E

FIRST ISSUED IN JUNE, 1950
BY TPA 3, MINISTRY OF SUPPLY

RE-ISSUED FEBRUARY, 1967
BY
TECHNICAL INFORMATION AND LIBRARY SERVICES

MINISTRY OF AVIATION

Best Available Copy

FOR OVERSEAS RELEASE CONDITIONS
SEE INSIDE COVER

ARCHIVE COPY

Best
Available
Copy

U.D.C. No. 536.46 : 541.126 : 661.937

R. & D. Report No. 1312

Copy No.

THE BRITISH OXYGEN COMPANY LIMITED

RESEARCH AND DEVELOPMENT DEPARTMENT

REPORT

TITLE

IGNITION IN HIGH PRESSURE OXYGEN

Author: M. Guter

Date: 1st June, 1950

Issued by: A.M. Clark

Approved by: P.H. Sykes

Best Available Co

Page No.

INTRODUCTION 1

DESCRIPTION OF APPARATUS AND METHOD 2
(a) Description of H.P. Apparatus 2
(b) Experimental Method used with High Pressure bomb 3
(c) Description of 'Pot' Ignition Apparatus and Method' 4

CLASS I - LUBRICANTS, INCLUDING THREAD SEAL AND SEALING COMPOUNDS. 5
1(a)1 - Aircraft Lubricating Oil 5
1(a)2 - Silicone D.C. Fluids 6
1(a)3 - Aroclors 7
1(b)1 - Anti-seize and Sealing Compound AN-C-86 7
1(b)2 - Acheson Thread Seal and Sealing Compounds - 3.30 and C.T.2. 8
1(b)3 - Silicone Greases 9
Class I - Discussion 10

CLASS II - NATURAL AND SYNTHETIC RUBBER HOSE MATERIALS 12
11(a)1 - I.C.I. Standard Rubber 12
11(a)2 - I.C.I. Natural Rubber 13
11(a)3 - Natural Rubber Hose BTR Specification 965/01 13
11(a)4 - Dunlop Samples 14
11(b)1 - Hycar 14
11(b)2 - Neoprene 15
11(b)3 - High Pressure Oxygen Hose BTR Specification 1180 16
11(b)4 - Siebe Gorman Hose 17
11(b)5 - Silicone Rubber 17
11(c) - Carbon Black 18
Class II - Discussion 18

CLASS III - POLYMERS 21
111.1 - Polythene 21
111.2 - Teflon 22
111.3 - Kel-F 22
111.4 - Polyvinylchloride
(a) Unplasticised 23
(b) Plasticised 23
111.5 - Polyvinyl-alcohol 23
111.6 - Nylon 24
111.7 - Perspex 25
111.8 - German Buna 25
111.9 - Red Vulcanised Fibre 26
111.10 - Resin-bonded Fabric 27
111.11 - Tufnol 28
Class III - Discussion 29

CLASS IV - VALVE SEATS AND REGULATOR DIAPHRAGMS 31
IV.1 - GACO Seats 31
IV.2 - Beeswaxed Leather Washers 31
IV.3 - Grey Horn Fibre Seats 32
IV.4 - Rubber Seats
(a) Ebonite 33
(b) Soft Rubber Seats 33
IV.5 - Diaphragms 33
Class IV - Discussion 34

CLASS V - METALS AND ALLOYS 36
Class V - Discussion 37

GENERAL DISCUSSION 38

APPENDIX I 40

APPENDIX II 41

SUMMARY.

Discussions with the Company initiated during 1945 by the Ministry of Aircraft Production showed that information concerning the ignition characteristics of materials which might be used in high pressure oxygen systems was urgently required, particularly at pressures exceeding 150 atmospheres. The Ministry's representatives considered that a useful first step would be the determination of the ignition temperatures of selected materials in oxygen at pressures up to 250 atmospheres.

Following these discussions a contract was placed by the Ministry of Supply with the Company and experimental work continued from June 1947 until October 1949.

Ignition temperatures in high pressure gas were determined using a stainless steel bomb in which samples could be raised to the ignition temperature in a few minutes The effect on ignition temperature of changes in total pressure, rate of heating, "ageing", i.e. prolonged storage of material in oxygen under pressure, oxygen concentration, and the physical state of the sample were determined in the high pressure apparatus. A simpler apparatus called the 'pot' ignition apparatus was developed for the rapid determination of ignition temperatures in oxygen at atmospheric pressure.

The many materials examined have been classified in the following five groups:-

1. Lubricants, including thread sealing compounds.
2. Natural and Synthetic Rubber Hose Materials.
3. Polymers.
4. Valve Seat materials.
5. Metals and Alloys.

The ignition temperatures of the materials in Class I were relatively unaffected by changes in oxygen pressure. The Aroclors (chlorinated diphenyls) were particularly resistant, and had ignition temperatures above 400°C. If their other properties are satisfactory they should prove suitable for use as lubricants and hydraulic fluids in oxygen systems. Acheson Grease G.30 and the Ministry's anti-seize and sealing compound also had high ignition temperatures which were unaffected by pressure. For this reason they would be preferred to the silicone greases for use in oxygen.

The ignition temperatures of the rubber hose materials in Class II were all considerably reduced by increasing the oxygen pressure, except in the case of silicone rubber which ignited above 300°C. The natural and synthetic rubbers, other than silicone, were found to ignite at temperatures below 200°C in oxygen at pressures of 100 atmospheres or higher. The ignition temperatures were considerably reduced if traces of the fabric used as reinforcement in the completed hose were included with the sample. Increases in heating rate led to significant reductions in the ignition temperatures of hycar, neoprene and BTR Hose (Specification 1180) Provided certain precautions are strictly observed it is suggested that rubber hoses may be used with high pressure oxygen.

Included in Class III were Teflon, Kel-F and phosphorylated polyvinyl alcohol which were the most resistant non-metallic materials examined. They failed to ignite in oxygen at 250 atmospheres when heated to 350°C. In the 'pot' test they sometimes ignited at temperatures above 500°C. Increasing the oxygen pressure to 175 atmospheres reduced the ignition temperature of most of the other materials included in Class III, but with polythene,

nylon and perspex a further increase in pressure to 250 atmospheres caused only an insignificant increase in the ignition temperature. Polythene, red vulcanised fibre and resin bonded fabric were also examined in air; the ignition temperatures in air were found to be rather higher than in oxygen but no definite relationship between the partial pressure of the oxygen and the ignition temperature of these materials was obtained. Special ageing experiments provided interesting results, but unfortunately did not yield general conclusions.

The materials in Class IV with the exception of GACO seating materials had relatively low ignition temperatures. The much higher ignition temperatures obtained with some of the materials in Class III suggest that they may be preferred for making valve seats, provided their mechanical properties are satisfactory.

None of the metals and alloys in Class V ignited in oxygen at 250 atmospheres when heated alone to 350°C. Copper, magnesium alloy and mild steel turnings ignited in the presence of a drop of oil if heated to about 200°C in oxygen at 250 atmospheres.

Changes in gas flowrate, oxygen concentration, heating rate and physical state had no marked effect on ignition temperature for most of the materials examined. Exceptions were some Class II materials which were affected by heating rate and Buna which in the form of shavings ignited at temperatures more than 100° below the corresponding ignition temperatures for samples in block form.

Materials in Classes II, III and IV were examined by the 'pot' test. In general, it was found that the higher the 'pot' ignition temperature the higher was the ignition temperature in high pressure oxygen. Unfortunately the 'pot' ignition temperature gave no indication of the effect of pressure in the range 50 - 250 atmospheres on ignition temperature.

No attempt was made to examine the behaviour of the materials under actual working conditions at high pressure. It is not possible therefore to relate the ignition temperatures observed under controlled conditions to the hazards associated with the everyday use of combustible materials in high pressure oxygen. However as no materials ignited at a temperature below 100°C and very few below 150°C in oxygen at pressures up to 250 atmospheres it seems highly probable that with careful selection a number of materials which are not entirely non-inflammable can be safely used in oxygen at high pressures. When using such materials it is important to avoid any sudden changes in pressure or temperature, and to ensure the absence of any inflammable dust or other material more susceptible to ignition, which might initiate combustion.

IGNITION IN HIGH PRESSURE OXYGEN.

REPORT ON WORK CARRIED OUT UNDER MINISTRY OF SUPPLY CONTRACT

INTRODUCTION.

In May 1945 the Company was approached by the Ministry of Aircraft Production for information and discussion on the ignition characteristics of materials which might be used in high pressure oxygen systems. The discussions showed that oxygen was being used on aircraft at increasingly high temperatures and pressures and the Ministry was concerned "at the lack of precise data on the effect of high pressure oxygen on organic materials". Fires and explosions had occurred in high pressure oxygen systems and it was considered "of extreme importance in connection with the development of oxygen equipment for peace-time aircraft, that research into the factors influencing ignition in high pressure oxygen be undertaken." Although there was some published information about ignition temperatures of a very few materials in oxygen at pressures up to 150 atmospheres there was no information concerning the behaviour of any material whatever at higher pressures. The Ministry's representatives were anxious to obtain such information for a number of materials up to 250 atmospheres. While a long term programme of fundamental research would be necessary to decide the influence of all factors which might be concerned in the spontaneous ignition of materials in high pressure oxygen, the Ministry's representatives considered a useful first step would be to determine the effect of oxygen pressures up to 250 atmospheres on the ignition temperature of selected materials.

Following these discussions a contract was placed with the Company in May 1946 by the Ministry of Supply. Experimental work under this contract started in June 1947 and continued until October 1949. The agreed objective of the work was to determine the ignition temperatures of selected materials in oxygen at pressures up to 250 atmospheres, and to study the influence of a number of variables on this behaviour. In addition to pressure, the main variables examined include rate of flow of gas, rate of heating the sample, effect of prolonged storage in oxygen under pressure, oxygen concentration and the physical state of the sample. No attempt was made to study the behaviour of materials under actual working conditions, or to decide if they would be completely safe against all hazards in use. This could only be done by means of a greatly enlarged programme of research relating to the design and use of particular items of equipment.

In view of the very large number of materials that have been exmined a broad classification has been attempted and the materials have been placed in the following five groups:-

1. Lubricants, including thread sealing compounds.
2. Natural and synthetic rubber hose materials.
3. Polymers.
4. Valve seat materials.
5. Metals and alloys.

The report first describes the apparatus and experimental methods used. The results are presented and discussed in five separate sections relating respectively to the above groups.

Results of other workers in this field are few and have been found only for materials classified in sections I, IV and V. These results, and an account of the methods by which they were obtained are included in the relevant discussion sections.

DESCRIPTION OF APPARATUS AND METHOD.

The main apparatus was a stainless steel vessel inside which a small sample of the material under test was heated in oxygen at constant pressure until the sample ignited, or until the apparatus had reached its maximum temperature, which was about 400°C. This apparatus will be referred to as the H.P. apparatus. A second apparatus was used for studing the ignition of materials in oxygen at atmospheric pressure. This second apparatus will be referred to as the 'pot ignition apparatus. The high pressure apparatus and the 'pot' apparatus are described fully below.

(a) Description of H.P.Apparatus:

The apparatus consisted essentially of a stainless steel vessel or bomb containing a furnace and a reaction tube in which the sample, contained in a small glass boat, was placed. Figure 1 shows in detail the arrangement of the bomb after assembly.

The main pressure vessel consisted of a cylindrical body and flat cover plate secured by six bolts to a flange forged integrally with the body. A pressure tight seal between the body and cover plate was made by a spigot and socket joint using a copper gasket. The cover plate contained two gas inlet connections, one each for oxygen and nitrogen; the exit gas connection was contained in the nose of the bomb remote from the cover plate. The gas connections were of the conventional nut and nipple type as shown in Figure 1. The two furnace leads passed through the cover plate and pressure tight seals were made by hard soldering the leads to a stout copper connector contained between two insulating bushes as shown in Figure 2.

One end of the furnace, shown in detail in Figure 3, fitted into a recess in the cover plate; the furnace was connected to the electrical leads passing through the cover plate which then carried the furnace quite securely. When the joint between the cover plate and the body was made the furnace projected centrally into the body of the bomb. The bomb was placed on a steel support to which it was strapped and the furnace and gas connections closed. The support securing the bomb was surrounded by a protecting chamber of ¼" steel plate fitted with a door. When the bomb was in position inside the protecting chamber its nose faced the door.

The reaction tube 10 mm. O.D. Pyrex tubing was inserted through the nose of the bomb and fitted into a recess in the cover plate. When the tube was in position it was situated centrally inside the furnace. A specimen, weighing about 0.1 gm., of the material to be examined was placed in a small chemically clean boat and placed inside the reaction tube. It was located at the centre of the tube in close proximity to the junction of a thin wire chromel alumel thermocouple fitted to a steel nut and nipple as shown in Figure 4. When the nipple was in position in the nose of the bomb the boat containing the sample was in the middle of the reaction tube and the thermocouple junction was within a ¼" of the sample. The door of the protecting chamber was closed and the bomb was ready for use.

The remainder of the equipment consisted of a control panel and a gas supply system. The high pressure oxygen and nitrogen used in the experiments was stored in a battery of six high pressure cylinders. The cylinders were charged to 300 atmospheres from a gas holder by means of a water lubricated compressor. The control panel contained the valves and pressure gauges required to regulate the flow of gas to and from the bomb, the furnace control instruments and a Foster Temperature Recorder

connected to the thermocouple. All gas lines connecting the control valves to the bomb were made from copper pressure tubing of 1/8" O.D. and 1/16" I.D.

(b) Experimental Method used with High Pressure Bomb:

The flowsheet of the apparatus is shown in Figure 5. When the bomb was ready for use the main oxygen valve (V.1) and the main nitrogen valve (V.3) were opened after ensuring that all the other valves were closed. The fine adjustment valve (V.2) was carefully opened and oxygen admitted to the bomb until the desired experimental pressure was reached as indicated by the 10" dial pressure gauge (P.G.1). In experiments in which it was required to maintain a flow of oxygen through the bomb the fine adjustment valve (V.5) was carefully opened until the flowmeter indicated the desired flow of gas. All gas flowrates were measured at atmospheric pressure, and are quoted as such. By controlling valves V.2. and V.5. it was possible to maintain a constant pressure inside the bomb and a steady flow of oxygen through the bomb. The nitrogen system connected to the bomb was included as a safety measure to supply an inert atmosphere in the annular space between the furnace and bomb wall thus reducing the quantity of high pressure oxygen inside the bomb without affecting the purity of oxygen in the reaction tube. The nitrogen supply was not used after the first experiments but was in fact available for "quenching" in an emergency. Current was supplied to the furnace and the energy input regulated to give a suitable heating rate, the temperature inside the reaction tube heated by the furnace was automatically indicated by the Foster Temperature Recorder. Smooth temperature-time curves were obtained from the Recorder until the ignition temperature was reached when a sharp break occurred in the curve. In many cases the needle on the Recorder moved through several hundred degrees immediately after ignition. In other cases the 'kick' was not so marked, but there were only five experiments, all with one material, during which the sample ignited without evidence of the ignition being registered by a break in the temperature-time curve. Figure 6 shows some typical temperature time curves copied from actual experimental records.

Special experiments were carried out to determine whether the temperature indicated by the thermocouple was the same as the temperature of the sample. Samples of quinhydrone were placed in the sample boat and introduced into the bomb as described above. Nitrogen was admitted to the apparatus and allowed to flow through the reaction tube at 2 litres/minute. Current was supplied to the furnace until the thermocouple indicated the temperature 10° below the normal melting point of quinhydrone when the current was switched off and the nitrogen flow was increased. The temperature indicated by the Recorder began to fall and the maximum temperature was noted. The sample was removed from the bomb and examined. The experiments were repeated with increasing maximum temperature until the sample had melted.

The temperature indicated by the thermocouple corresponding to the melting point of quinhydrone was found to be 175 ± 2° compared with the normal melting point of 173°. The experiments were repeated at various flowrates and heating rates but the melting point of quinhydrone in the high pressure bomb was always within 5° of the normal melting point. It may be concluded, therefore, that the temperature indicated by the thermocouple was in good agreement with the temperature reached by the sample in the boat.

It was considered desirable to employ fairly rapid heating rates to ensure that the sample reached its ignition temperature with the minimum of chemical change. The heating rate normally employed raised the sample from 100° to 200° in approximately two minutes. Unless otherwise indicated in the text this was the heating rate employed. Except in a few cases the ignition temperature was reached within four minutes of switching on the heater.

When liquid materials were examined a few drops were transferred to the sample boat by means of a chemically clean glass tube. Greases were transferred from a glass rod. Samples of solid materials were cut in the form of small blocks from the master specimen. In a few cases solid materials were also examinedafter shredding. In all cases 0.1 gm ± 10% of any given material was used in each experiment.

(c) Description of 'Pot' Ignition Apparatus and Method!

The 'pot' ignition apparatus was used to determine the minimum ignition temperature of various materials when introduced into pre-heated oxygen at 1 atmosphere pressure. Oxygen was passed through the apparatus at a standard rate of 2 litres/minute. The apparatus consisted of an electric furnace, glass reaction tube, sample carrier and thermometer as shown in detail in Figure 7. The sample carrier had a tungsten needle fixed at its lower end to which small specimens of the material under test could be attached and introduced into the reaction tube. The sample carrier and thermometer were each fixed to standard B.14 joints to enable them to be introduced and removed speedily from the reaction tube and to ensure that the thermometer bulb and tungsten needle occupied the same position in the middle of the reaction tube. At a later stage when it was necessary to work at temperatures above 380°C the thermometer was replaced by a thin wire chromel alumel thermocouple.

To determine the 'pot' ignition temperature of any given material current was supplied to the furnace and oxygen from a gas cylinder was allowed to flow upwards through the reaction tube at 2 litres/minute. The thermometer was placed in position and the current to the furnace was adjusted until the thermometer indicated a constant temperature. Small block samples of the given materials each weighing about 0.1 gm.were prepared, impaled on the needle of the carrier, and introduced into the reaction tube after removing the thermometer. The time at which the sample was introduced into the reaction tube was noted and if no ignition was observed within two minutes the sample was withdrawn and examined. After each experiment the thermometer was replaced and the temperature checked. Ignition when it occurred could be seen and was initiated very often by a slight explosion and a flash. If ignition occurred the temperature of the furnace was reduced in steps of 10° until a temperature was reached at which the sample did not ignite within two minutes. If the sample failed to ignite the test was repeated with fresh samples at progressively higher temperatures until ignition occurred. For most of the materials examined the lowest temperature (within 10°) at which the sample ignited under the conditions of this test was determined and has been called the 'pot' ignition temperature. In some cases the 'pot' ignition temperature was determined more accurately.

In general it was found that increasing temperature caused a progressive reduction in the time taken for ignition to occur, that the minimum 'pot' ignition temperature was not affected by oxygen flowrate in the range 1-5 litres/minute and that replacing oxygen by air increased the ignition temperature. Results were closely reproducible and with most materials the minimum ignition temperatures could be fixed within 5°C. Table I gives detailed results obtained for a black rubber seating material.

TABLE I.

Temperature °C	Ignition Time seconds. x	Frequency of ignition	Mean ignition time seconds
300	xx	0/2	
320	xxx	0/3	
340	xxx	0/3	
350	118,119,87.	3/3	108
360	83, 93, 68	3/3	81

x indicates that ignition failed to occur within 2 minutes of introducing the sample into the reaction tube.

CLASS I - LUBRICANTS, INCLUDING THREAD SEALING & LUBRICATING COMPOUNDS.

The following materials in this class were examined:-

(a) Lubricating Oils:

1. Aircraft Lubricating Oil - DE.2472 B/O. *
2. Silicone D.C.Fluids.
3. Aroclors.

(b) Thread Seal Compounds:

1. Anti-seize and Sealing Material - AN-C-86 *
2. Acheson Thread Sealing & Lubricating Compounds -G.30 and CT.2. *
3. Silicone Greases.

* Indicates that the material was submitted by the Ministry of Supply.

I(a)1 - Aircraft Lubricating Oil.

Experiments with this substance, the first to be examined in the H.P.bomb, were carried out at pressures up to 250 atmospheres, in a static atmosphere and at three different flowrates up to a maximum of 3 litres/minute. The results are presented in Table 2 which gives the average ignition temperatures; the standard deviations are shown in brackets. It will be seen that in the pressure range 20-250 atmospheres the ignition temperature for this lubricating oil was not greatly affected by flowrate nor by increase in oxygen pressure. In special static experiments at 100 atmospheres the substance was heated slowly to the ignition temperature over a period of 3 hours, but it was found that this considerable reduction in the heating rate had no significant affect on the ignition temperature. In two experiments at 100 atmospheres in which the maximum heating rate was used ignition temperatures were 200°C and 202°C, which was about 20° below the ignition temperature at the normal heating rate.

TABLE 2.

Ignition Temperatures (°C) of Aircraft Lubricating Oil. DE 2472 B/O

Pressure ats.	Flowrate - litres/minute			
	Nil.	1	2	3
1	no ignition	309 (24)	334 (21)	-
20	219 (18)	240 (1)	277 (34)	259 (10)
50	227 (12)	225 (22)	271 (14)	256 (12)
100	220 (15)	210 (26)	222 (18)	-
175	237 (16)	202 (29)	228 (30)	-
250	190 (23)	207 (20)	-	-

Aircraft lubricating oil was also examined at 1 atmosphere at various flowrates in the range 0-0.6 litres/minute. It was found that for flowrates between 0-0.02 litres/minute no ignition occurred. In the range 0.05-0.07 litres/minute a succession of small explosions beginning at 300°C and continuing for about 1½ minutes was observed. Under these conditions combustion was incomplete. At higher flowrates ignition occurred quite sharply between 320 and 340°C. At the lower flowrates it appears that the supply of oxygen was inadequate for complete combustion and a carbonaceous residue was left in the boat. It will be noticed that at higher oxygen pressures, see Table 2, ignition does occur when the flow of oxygen through the apparatus is reduced to zero.

Experiments were repeated using oxygen gas saturated with water vapour at 20°C but no change in ignition characteristics were observed. Ignition temperature was not affected by the presence of finely divided metals in the lubricating oil nor by the distribution of the oil on glass wool.

After some 200 experiments had been performed in the high pressure bomb an explosion occurred during an experiment in which Aircraft lubricating oil was being examined which resulted in damage to the cover plate and to one of the electrical leads to the furnace. This incident is described fully in Appendix 1.

1(a)2 - Silicone D.C.Fluids.

Four D.C.Silicone fluids were examined in oxygen at 1 atmosphere. The results obtained with these substances under controlled conditions varied considerably, but show that all were inflammable, and ignition often occurred with an explosion of some violence, considering the quantity of material involved. Table 3 gives the range in which ignition occurred. Flow rate had no detectable effect on the ignition temperature, but increasing the heating rate so that the sample was heated from 100 to 300° in two minutes reduced the ignition temperature by about 50°C.

TABLE 3.

Ignition Temperature of D.C.Fluids in oxygen at 1 atmosphere (flowrate varied between 0.2 to 1.0 litres/minute)

Material	Range of ignition temperature	Comments
D.C.Fluid 200 CSTKS 100	315 - 385	Explosion and ignition in all cases. In most cases a succession of slight explosions were observed.
D.C.Fluid 200 CSTKS 350	315 - 595	In one experiment no ignition occurred. In remaining experiments ignition was preceded by explosion.
D.C.Fluid 710 CSTKS 500	470 - 495	Ignition observed in half the experiments only.
D.C.Fluid 500	310 - 430	Slight explosions observed after ignition had ceased at a temperature about 100° above the ignition temperature

A few experiments in high pressure oxygen were carried out on Fluid D.C.200. CSTKS 100. The results are given in Table 4 and show that increasing the pressure to 250 atmospheres has little effect on the ignition temperature. In one special experiment the sample was kept at 240°C for 16 hours in oxygen at 50 atmospheres. The temperature was then increased and ignition occurred at 265°C.

TABLE 4.

Ignition Temperature (°C) of D.C.Fluid 200 CSTKS 100.

Pressure ats.	Flowrate - litres/minute 0		2	
	Individual results	Average	Individual results	Average
50	289, 291, 284	288	300, 314, 309	308
250	300, 309, 235	281		

1(a)3 - Aroclors.

These materials made by the Monsanto Chemical Company are essentially chlorinated diphenyls. It will be seen from the results given in Table 5 that they have high ignition temperatures and that increasing pressure does not affect the ignition temperature noticeably. Since under given conditions ignition did not always occur the frequency of ignition is given. Ignition when it occurred was violent and invariably shattered the reaction tube containing the sample. With other materials shattering of the reaction tube was a rare occurrence. In all cases no residue was left in the boat.

It is of interest to record that experiments in a different connection carried out in the Company's Research Department showed that those materials are more resistant to oxidation than the mineral oils specially selected for lubrication of air compressors.

TABLE 5.

Ignition Temperatures of Aroclors.

Aroclor Code No.	Pressure ats.	Flow F (2 litres/min) or Static S	Ignition Temperature °C	Average Ignition Temp. °C	Frequency of Ignition
1242	50	S	470, 445		2/4
		F	387, 411, 425	408	3/8
	100	F	431, 364, 344 417	389	4/7
	250	S	-	-	0/3
		F	-	-	0/3
1260	50	F	400, 403, 390, 429, 419, 445	414	6/6
	100	F	407, 400, 425, 449, 471, 450	434	6/8
	175	F	-	-	0/4
1248	50	F	401, 443, 443, 403.	422	4/9
	100	F	417, 410, 402, 386, 407.	404	5/7
	175	F	-	-	0/4
1254	50	F	450, 458, 476, 479	466	4/7

1(b)1 - Anti-seize and Sealing Compound. AN-C-86.

This material was examined at pressures up to 175 atmospheres in a static atmosphere and in a flow of oxygen of 2 litres/minute. Results given in Table 6 show that variations in pressure in the range 50 to 175 atmospheres had no significant affect on ignition temperature. In experiments at 1 atmosphere the material failed to ignite when heated to 420°C; a powdery black residue was left in the boat, and oily drops condensed on the cooler parts of the reaction tube. After ignition at high pressure a white ash was obtained in the sample boat, but drops

of oil condensed on the walls of the reaction tube were still observed.

TABLE 6

Ignition Temperatures of Anti-seize and Sealing Compound. AN-C-86

Pressure ats	Flowrate - litres/minute 0 Individual results.	Average	2 Individual results.	Average
50	411, 368, 400, 372	388	no ignitions up to	420°C
100	338, 381, 349	356	420, 415, 380, 375	397
175	350, 429, 320	366	402, 395, 375,	391

1(b)2 - Acheson Thread Sealing and Lubricating Compounds - G.30 and C.T.2.

The ignition temperatures in high pressure oxygen flowing at 2 litres/minute are given in Table. 7. In five experiments with C.T.2. ignition had occurred, but no evidence of ignition was shown by the temperature-time curve. These were the only cases during the whole experimental programme in which the sample ignited but the ignition temperature could not be obtained from the temperature record.

TABLE 7

Ignition Temperatures of Acheson Thread Sealing and Lubricating Compounds - G.30 and C.T.2

Pressure ats.	C.T.2. Ignition Temp. °C	Comments	G.30. Ignition Temp. °C	Comments
50	295, 321, 324, 335, 322.	failed to ignite in 2 tests.	391, 450	failed to ignite in 4 tests
100	not detected	see note (1) below	370, 385, 395, 405	failed to ignite in 2 tests
175	not detected	see note (2) below	406	failed to ignite in 3 tests
250	259, 280	failed to ignite in 2 tests	-	failed to ignite

Note (1) - In four tests the sample left a residue which showed evidence of ignition, but no deflection of the temperature recorder occurred to mark the ignition temperature. In a fifth test no ignition occurred.

Note (2) - Ignition occurred at a temperature below 350°C, but no deflection of the recorder was observed.

1(b)3. - Silicone Greases.

Three Silicone greases were examined in oxygen at pressures up to 250 atmospheres. The ignition temperatures are given in Table 8 and show that the ignition temperatures obtained at any given pressure in a flow of oxygen are greater than under static conditions. Similar results were obtained with D.C.Fluid 200 CSTKS 100. Grease D.C.41 appears to be the most resistant of the three silicone greases examined but its ignition temperatures are lower than those reported previously for the Acheson compound G.30 and for anti-seize and sealing compound AN-C-86.

TABLE 8.

Ignition Temperatures of Silicone Greases.

Silicone Material	Pressure ats	Flow F (2 l/min) or Static S	Ignition Temperature - °C		
			Individual Results.	Average	Standard deviation
Plug Cock grease	50	S	243, 249, 259	250	-
	250	S	285, 300, 280	288	-
	50	F	265, 330, 318, 272, 296, 280, 300, 278, 294.	293	21
	175	F	230, 238, 257, 253, 230, 265.	245	15
Grease D.C.33	50	S	209, 220, 210.	213	-
		F	272, 243, 251, 259.	256	12
	250	S	181, 190, 189.	187	-
		F	233, 181, 189, 222, 222, 218.	211	21
Grease D.C.41	1	S	no ignitions up to 520°C	-	-
		F	502, 500, 493, 502, 500, 500.	499	4
	50	S	300, 344, 375, 370, 367, 252	335	49
		F	360, 368, 350, 360, 371, 350.	360	9
	100	S	274, 220, 215, 200, 282, 308.	250	44
		F	312, 302, 312, 328, 283, 317.	309	15

Grease D.C.33. was also examined in air flowing at 2 litres/minute at pressures up to 250 atmospheres. Results given in Table 9 show that there is no appreciable change in ignition temperature with increasing pressure and that the ignition temperatures in air are higher than in oxygen by 30° at 50 atmospheres pressure and by 70° at 250 atmospheres pressure.

TABLE 9.

Ignition Temperatures of Silicone Grease D.C.33 in air

Pressure ats.	Ignition Temperature - °C Individual Results.	Average	Standard Deviation
50	281, 271, 283, 283, 338, 254, 307.	287	27
100	293, 284, 257, 283, 257, 217.	265	28
175	256, 272, 260, 268, 270, 210, 233.	253	23
250	300, 241, 250, 289, 296, 303, 280.	280	25

In experiment No.1151 in which Grease D.C.41 was under examination, ignition of the material in the reaction tube was followed by an explosion in the copper tube connecting the bomb to the exit control valve. The copper tube was burst in several places. The incident is described in Appendix II.

Class I - DISCUSSION.

An examination of the ignition temperatures of the materials reported in this section leads to the following conclusions:-

1. Spontaneous ignition did not occur. No materials included in this section ignited unless heated to 180°C even at the highest oxygen pressure.

2. The ignition temperature fell with increasing oxygen pressure but the effect was not marked at pressures above 50 atmospheres up to the maximum of 250 atmospheres. At high pressures rate of flow of oxygen within the range examined had a minor effect.

3. Of the liquid materials examined the Aroclors are clearly the most resistant to ignition. Whether these materials are safe to use regularly in high pressure oxygen systems is of course not decided by ignition temperature alone; it is not unreasonable to suggest, however, that the Aroclors, if their other properties are satisfactory, may be suitable for use as lubricants and hydraulic fluids in oxygen systems.

4. The Acheson compounds G.30 and C.T.2. and the Ministry Anti-seize Compound AN-C-86 have high ignition temperatures unaffected by pressure and should be safe to use in oxygen systems. Judged by ignition temperature they are to be preferred to the Silicone materials.

S.E. Brooks in U.S.A. Bureau of Mines Reports of Investigations No.2555 entitled "Spontaneous Ignition of Oils in Oxygen under Pressure" reports the ignition temperatures he obtained for a few oils. Brooks used a static method in which small samples of oil distributed on pure asbestos were placed inside a steel bomb of 4 ccs capacity and heated until ignition took place. The point at which ignition occurred was determined by listening with headphones for the explosion which accompanied the ignition. The work is also described by M.D. Horsey in a paper entitled "A Study of the Oxygen-Oil Explosion Hazard" from which the following ignition temperatures are taken:-

Oil	Ignition Temp. °C
Kerosene	175
Mobiloil A	170
Sperm	135
Linseed	120

In all cases the ignition temperature was found, as a first approximation, to be independent of pressure up to 250 atmospheres. The results for Mobiloil A indicated a slight, but probably not significant, increase in ignition temperature with pressure.

A report written in 1941 by L. S. Green of the Douglas Aircraft Co. Inc. reports the ignition temperatures in high pressure oxygen of several materials of the types included in this section. This report was supplied to the Company by the Ministry of Supply after the experimental programme had commenced. Green used essentially a static method in which a small plug of .09 ccs capacity was filled with the material under test and connected to a small combustion chamber the temperature of which could be raised by a Thor heat gun. Temperature readings were taken and when ignition occurred a sharp increase in temperature was observed. Materials examined by Green included oils, soaps and a variety of thread lubricating compounds. Although many different materials were examined up to pressures of about 150 atmospheres and temperatures up to 250°C there was no systematic examination of the effect of pressure on ignition temperature. Most materials were included in one experiment only. The results given in the report are in reasonable agreement with the results given in this section for similar materials.

Among the conclusions reached by Green were "that the majority, if not all, of the common materials that might be useful as thread lubricants will combine with oxygen at pressures of 2000 p.s.i. (135 atmospheres) or less if the ambient temperatures are 350°F to 550°F" (175°C to 290°C).

"That Aquadag, a mixture of colloidal graphite and distilled water is not combustible in oxygen at any pressure and temperature combination that can occur in an oxygen system but that it has several disadvantages as a lubricant.

"That Glydag, a mixture of colloidal graphite and glycerine is suitable, when properly applied, for use as a thread lubricant in oxygen systems. An exception is its use on magnesium parts."

In our opinion Aquadag and Glydag will burn in oxygen at temperatures above those used by Green. The Acheson lubricants C.T.2. and G.30 included in this section contain graphite and it was possible to make these materials ignite. Acheson lubricant G.30 and the Ministry's Anti-seize compound ignited only at temperatures above 350°C. They are therefore considered to be reasonably safe for use in oxygen.

It is clear from the results presented in this section that some of the materials that can be used as thread lubricants have quite high ignition temperatures in high pressure oxygen. Properly applied they will be present only in very small amounts enclosed between metal surfaces. It seems unlikely that these materials could be raised in practice to the ignition temperature by adiabatic compression since they are in intimate contact with extended metal surfaces. Nor is it likely that sufficiently high temperatures could be reached as a result of friction between gas escaping by leakage and the lubricant. Conclusion 4 above seems, therefore, to be reasonable. It must be emphasised, however, that the experiments described in this report had as their primary objective a comparison of different materials by means of the determination of ignition temperatures. It is beyond the scope of the report to make final recommendations concerning safe practice.

CLASS II - NATURAL AND SYNTHETIC RUBBER HOSE MATERIALS.

The materials examined in this Class are classified as follows:-

(a) Natural Rubbers:

1. I.C.I. Standard Rubber *
2. I.C.I. Natural Rubber *
3. Natural Rubber Hose BTR Specification 965/01 *
4. Dunlop Samples.

(b) Synthetic Rubbers:

1. Hycar. *
2. Neoprene. *
3. Rubber Hose BTR Specification 1180.
4. Siebe Gorman Hose.
5. Silicone.

(c) Carbon Blacks:

* Indicates that the material was submitted to the Ministry of Supply.

II(a)1. - I.C.I. Standard Rubber.

This material was first examined in November 1947 in high pressure oxygen and re-examined a year later after it had been kept in air at room temperature. The results given in Table 10 show that ignition temperature decreases with increasing oxygen pressure and that in given conditions the ignition temperature decreases with the age of the material. Accelerated ageing at 50°C for three days in oxygen at 100 atmospheres also affects the ignition temperature.

Samples kept in the bomb at 225°C for 16 hours in oxygen at 100 atmospheres did not ignite. When removed from the bomb the samples had hardened and carbonised and had lost their rubber-like properties. The ignition temperatures of these residues were determined in oxygen at 100 atmospheres and found to be 353°C, 361°C, 346°C and 357°C.

TABLE 10.

Ignition Temperatures of I.C.I. Standard Rubber.

Pressure ats.	Average Ignition Temperatures - °C			
	Zero flow. Nov 1947.	Flow 2 litres/min. Nov. 1947.	Flow 2 litres/min. Oct. 1948.	After 3 days at 50°C in oxygen at 100 ats.
50	334	325	284	-
100	264	316	265	228
250	237	197	147	-

This material was also examined by the 'pot' test and the ignition temperature decreased from 370°C in August 1948 to 340°C in October 1949. This confirms the results at high pressure which showed that the ignition temperature is significantly reduced as the material ages.

II(a)2. - I.C.I. Natural Rubber.

The ignition temperature of I.C.I. natural rubber in high pressure oxygen was found to be 150°C or lower. At the highest pressures reproducibility of results was good unlike the wide variation obtained at 50 atmospheres. The results are given in Table 11 and show that ageing the sample reduces the ignition temperature. The individual results are given, average results are shown in brackets.

TABLE 11.

Ignition Temperatures of I.C.I. Natural Rubber.

Pressure ats.	Average Ignition Temperatures - °C			
	Zero Flow Dec.1947.	Flow 2 litres/min. Dec. 1947.	Flow 2 litres/min. Oct. 1948.	After 3 days at 500°C in oxygen at 100 ats.
50	(217)	291, 211, 325, 190, 199, 328, (251)	-	-
100	(154)	139, 122, 155, 137, 119, 142, (136)	-	115, 125, 117, 127, 120, 139, (124)
175	(124)	131, 132, 142, (135)	-	-
250	-	141, 132, 130, (134)	110, 115, 125, 128, 120, 119, (119)	-

The 'pot' ignition temperature of I.C.I. natural rubber was 365°C. Storage at 40°C in an atmosphere of which the relative humidity was 95% for 11 and 18 days did not raise the ignition temperature by more than 5°.

II(a)3 - Natural Rubber Hose BTR Specification 965/01.

The inner lining only of this hose was examined in a flow of oxygen at 2 litres/minute. The ignition temperature was found to fall considerably as the pressure was increased from 50 to 100 atmospheres. At 175 atmospheres the ignition temperature was only 133°C. The detailed results for this material are given in Table 12.

TABLE 12.

Ignition Temperatures of Natural Rubber Hose BTR Specification 965/01.

Pressure ats.	Ignition Temperatures - °C Oxygen flow - 2 litres/minute		
	Individual results.	Average	Standard deviation
50	280, 248, 324, 352, 329, 335.	311	39
100	179, 183, 183, 163, 180, 179.	178	8
175	127, 135, 136, 132, 130, 138.	133	9

The 'pot' ignition temperature was 330°C.

II(a)4 - Dunlop Samples.

Six samples compounded with different ingredients from natural rubber were obtained from Messrs. Dunlop Limited, and were examined in oxygen at a pressure of 100 atmospheres, and by the 'pot' test. The results are presented in Table 13 from which it will be seen that two of the samples, both containing a fair proportion of reclaim rubber, had considerably higher ignition temperatures than the other samples. Addition of anti-oxidant to the material corresponding to Code No.2905 did not affect the ignition temperatures appreciably, neither did the replacement of 23% clay (Code No.3007) by 23% carbon black (Code No.2290).

TABLE 13.

Ignition Temperatures of Dunlop Samples.

Dunlop Code No.	Main ingredients	%	Average Ignition Temperature in Oxygen at 100 ats. °C	Minimum 'pot' Ignition Temperature. °C
1804	Reclaim rubber Pure rubber Carbon black Spindle oil	39 10 16 15	335	380
1877	Reclaim rubber Pure rubber Oil	20 18 nil	311	380
3007	Pure rubber Clay Oil	46 23 nil	186	325
2290	Pure rubber Carbon black Oil	46 23 nil	185	300
2905	Pure rubber containing anti-oxidant.		159	350
	Pure rubber without anti-oxidant.		165	365

Trial lengths of hose, the inner lining of which corresponded to Code Nos. 1877 and 2290, were obtained from Messrs. Dunlop Ltd. Judged by ignition temperature the hose corresponding to Code No.1877 was expected to be more resistant to ignition and this was confirmed in special experiments with oxy-acetylene equipment. The hose corresponding to Code No.2290 could be made to fire easily whereas the hose corresponding to Code No.1877 was most resistant.

II(b)1. - Hycar.

Two hycar hoses were received from the Ministry. The first sample consisted of lining tube only and will be referred to as hycar lining tube. The second sample was made by the British Tyre and Rubber Company and will be referred to as BTR Specification 965/05. Samples of the inner lining of the latter material were removed for examination.

Experiments with hycar lining tube were carried out on 0.1 gm. samples to which small [illegible] ends of fabric still adhered and repeated with samples from which the fabric had been completely removed. In the presence of fabric the ignition temperature in oxygen at 100 atmospheres was reduced by about 100°.

Experiments on the effect of heating rate were carried out at 175 atmospheres. It was found that if the heating rate was reduced so that the time taken to heat the sample from 100 to 200° was four minutes instead of two minutes ignition did not occur in six experiments in which the sample was heated to 320°C, whereas at the normal faster heating rate the ignition temperature was 200°C. The results are shown in Table 14.

TABLE 14.

Ignition Temperatures of Hycar Lining Tube

Pressure	Ignition Temperature - °C			
	With fabric.		Without fabric	
ats.	Static	flow 2 litres/min.	flow - 2 litres/min. Individual results.	Average
50	243	-	385, 365, 352, 379, 360, 379.	370
100	223	252	350, 370, 376, 379, 379, 384.	373
175	195	208	199, 202, 218, 220, 180, 179.	200
250	-	-	156, 163, 170, 159, 171, 150.	162

The results for BTR specification 965/05 are given below. At all pressures it will be seen that the ignition temperature was below the corresponding ignition temperature for the hycar lining tube; in all cases the samples were carefully freed from fabric.

TABLE 15.

Ignition Temperatures of Hycar - BTR Specification 965/05.

Pressure	Ignition Temperatures - °C		
ats	Individual results.	Average	Standard deviation
50	200, 295, 188, 198, 205, 310, 221, 205.	228	47
100	224, 216, 205, 223, 222, 219.	218	9
175	142, 185, 172, 160, 177, 209.	174	23

The greater resistance to ignition shown by the hycar lining tube was confirmed by the 'pot' tests in which the lining tube had an ignition temperature above 390°C, whereas the BTR specification 965/05 ignites at 375°C.

II(b)2 - Neoprene.

Neoprene lining tube, received from the Ministry of Supply was examined in the high pressure apparatus with and without traces of fabric adhering to the sample. As with hycar lining tube the presence of fabric considerably reduced the ignition temperature.

The effect of heating rate was examined at 175 atmospheres, when it was found that increasing the rate so that the sample was raised through 100° in one minute reduced the ignition temperature from 245° to 177°C. The results are given in Table 16 and in all cases were obtained using the normal heating rate in a flow of oxygen of 2 litres/minute, except one series of experiments at 175 atmospheres at the faster heating rate. The inner lining of two neoprene hoses, one for oxygen and one for acetylene, made by the British Tyre and Rubber Company to their specification 1219, was also examined in 100 atmospheres at a flow rate of 2 litres/minute. The average ignition temperatures were 304° and 312°C respectively, which is about 20° above the ignition temperature under identical conditions of the neoprene lining tube submitted by the Ministry.

TABLE 16.

Ignition Temperatures of Neoprene Lining Tube

Pressure	Ignition Temperatures - °C			
	With fabric	Without fabric		
ats.	Average	Individual results.	Average	Standard deviation
50	229	300, 312, 300, 315, 300, 307.	306	7
100	175	279, 292, 292, 285, 275, 290.	285	7
175	191	264, 245, 238, 243, 251, 230.	245	12
		Fast heating rate 178, 176, 168, 168, 180, 190.	177	8
250	165	249, 245, 189, 162, 170, 248, 175.	205	44

The materials were also examined by the 'pot' test and the minimum ignition temperatures were as follows:-

Neoprene lining tube with fabric	- 330°C
Neoprene lining tube without fabric	- 380°C
BTR Specification 1219 oxygen hose	- 370°C
BTR Specification 1219 acetylene hose	370°C

II(b)3. - High Pressure Oxygen Hose BTR Specification 1180.

The inner lining of this hose manufactured for use in high pressure oxygen systems was examined at 100 and 250 atmospheres in a flow of oxygen. No ignitions were obtained at 250 atmospheres when the heating rate was the same as that used in the experiments at 100 atmospheres: hard carbonised residues were obtained. When, however, the heating rate was increased ignition occurred quite readily at about 175°C. The increase in heating rate was not very great; at the faster rate the sample was warmed from 60 to 160° in one and a half minutes.

The results are shown in Table 17.

TABLE 17.

Ignition Temperatures of H.P. Oxygen Hose
BTR Specification 1180.

Pressure ats	Heating rate	Ignition Temperatures - °C		
		Individual results.	Average	Standard deviation
100	Normal (100-200° in 2 mins)	314, 330, 333, 346, 300, 330.	325	16
250	Normal	Four non-ignitions. Samples heated to 320°C	-	-
	Fast	179, 181, 190, 172, 168, 161.	175	10

II(b)4 - Siebe Gorman Hose.

A sample of single covered wire reinforced high pressure hose used by the Siebe Gorman Company was received for examination. In special experiments Messrs. Siebe Gorman had succeeded in causing ignition of identical hose by adiabatic compression.

The material was examined at 100 and 250 atmospheres in oxygen flowing at 2 litres/minute. The results given in Table 18 show a marked reduction in ignition temperature at the higher pressure. The 'pot' ignition temperature was 400°C.

TABLE 18.

Ignition Temperatures of Siebe Gorman Hose.

Pressure ats.	Ignition Temperatures - °C		
	Individual results.	Average.	Standard deviation
100	378, 375, 368, 379, 372, 379.	375	4
250	147, 148, 170, 141, 128, 168.	150	16

II(b)5 - Silicone Rubber.

This material was examined at 50 and 175 atmospheres in a flow of oxygen and at 250 atmospheres under static conditions. The ignition temperatures are quite high and like the other Silicone materials reported in Class I are not greatly affected by increases in pressure. The material failed to ignite in the 'pot' test at 500°C.

TABLE 19

Ignition Temperatures of Silicone Rubber.

Pressure ats	Flow (F) (2 l/min) or Static (S)	Ignition Temperatures - °C		
		Individual results.	Average.	Standard deviation
50	F	355, 351, 360.	355	5
175	F	297, 333, 290, 331, 330, 265.	306	28
250	S	315, 330, 340, 315.	326	12

II(c) - Carbon Blacks.

Three samples of carbon blacks used in rubber compounding were examined in oxygen at 100 atmospheres flowing at 2 litres/minute in February 1949. The results are given in Table 20.

TABLE 20.

Ignition Temperatures of Carbon Blacks.

Material	Ignition Temperature - °C		
	Individual results	Average	Standard deviation
Lamp Black	309, 320, 314, 296, 281, 293.	302	15
Thermatomic Black	340, 308, 331, 335, 343, 339.	333	13
Gastex Black S.R.F.	301, 310, 305, 309, 312, 303.	307	4

Lamp Black was re-examined in September 1949; the ignition temperatures are given in Table 21 and are considerably greater at 100 atmospheres than the results obtained in February 1949. The heating rates used in both sets of experiments were the same and in all cases quite sharp breaks were obtained in the temperature-time curves. The samples were received as powders in air-tight tins. It is difficult to explain the discrepancy between the results obtained in February and September, but it is reasonably certain that pressure in the range 100 - 250 atmospheres does not have a marked effect on ignition temperature and that the carbon blacks have relatively high ignition temperature in high pressure oxygen.

TABLE 21.

Ignition Temperatures of Lamp Black obtained in September 1949.

Pressure ats.	Ignition Temperature - °C		
	Individual results.	Average	Standard deviation
50	373, 435. (failed to ignite in four tests)		
100	419, 396, 376, 378, 385, 399.	392	16
175	380, 390, 391, 371, 402, 402.	386	13
250	410, 375, 351, 361, 329, 317.	357	32

Class II - DISCUSSION.

Natural and synthetic rubber hoses are used in both high and low pressure oxygen systems. In high pressure systems the hoses are used mainly as flexible connections for charging cylinders. Fires in such high pressure systems have been reported but no detailed accounts are available of such incidents and they are believed to be infrequent. Fires in low pressure hoses used with oxy-acetylene welding equipment are more common. The fires usually occur after a 'flashback', i.e. hot gases are forced back from the torch into the supply hose where they may cause a hose to ignite.

As rubber hoses are frequently used in oxygen systems considerable work was carried out to determine the ignition characteristics of typical hose materials. The results presented

in this section show that :-

1) None of the hose materials ignited spontaneously at room temperature.

2) All the materials ignited in oxygen as the temperature was raised. The ignition temperature was considerably reduced by increasing the oxygen pressure in all cases, except that of silicone rubber which did not ignite below 300°C even at the highest pressures. The natural rubbers and the synthetic rubbers, other than silicone, may ignite at temperatures well below 200°C in oxygen at 100 atmospheres or above. The progressive reduction in ignition temperature with increasing pressures is probably not caused by the inclusion of carbon black fillers, since these materials when examined by themselves have ignition temperatures above 300°C in oxygen at 250 atmospheres.

3) Ignition temperatures of hycar, neoprene and BTR high pressure oxygen hose specification 1180, were all reduced by increasing the heating rate. At the fastest heating rates used in these experiments (100°C rise in 1 minute) the ignition temperature of neoprene in oxygen at 175 atmospheres was reduced by 70° from 245°C.

4) Accelerated ageing by storing samples of the inner lining at 50°C for three days in oxygen at 100 atmospheres reduced the ignition temperature of the I.C.I. Standard and Natural Rubbers. The ignition temperature of I.C.I. Standard Rubber was reduced by more than 40° after the material had been kept for one year in air at room temperature. Unfortunately the storage experiments at 50°C in oxygen at 100 atmospheres carried out with neoprene and hycar were not conclusive since the samples included fabric reinforcement. The ignition temperatures of neoprene and hycar were not significantly affected by storage at room temperature.

5) Most of the materials reported in this section were also examined by the 'pot' test. The silicone rubber which had the highest ignition temperatures had the highest 'pot' ignition temperature, and in general it was found that the higher the 'pot' ignition temperature the higher the ignition temperature in high pressure oxygen. The ratios of 'pot' ignition temperature to ignition temperature in high pressure oxygen at various pressures has been calculated but no quantitative conclusions can be made. Unfortunately the 'pot' ignition temperature gave no indication of the effect of pressure in the range 50 to 250 atmospheres on ignition temperature. The 'pot' ignition temperature did, however, give some qualitative indication about the behaviour in high pressure oxygen.

6) Traces of fabric adhering to samples of neoprene and hycar, caused marked reduction in the ignition temperatures of these materials. The reduction in ignition temperature was most marked at the lower pressures, e.g. neoprene lining tube, free from fabric, had an ignition temperature of 285°C in oxygen at 100 atmospheres whereas the ignition temperature fell to 176°C if traces of fabric were included with the samples. The corresponding figures for hycar lining tube were 373° and 252°C.

Fires in rubber hoses used in oxygen systems will occur if the temperature at any point within the hose in contact with oxygen is raised to the ignition temperature. If a trace of foreign matter of low ignition temperature is present in the hose it will determine the temperature at which combustion occurs. The actual values of the ignition temperatures of any given hose cannot by

itself decide whether the hose is safe for the duty envisaged, but other things being equal the material with the higher ignition temperature is to be preferred if parts of the hose may be subjected to sudden temperature changes. In hoses for use at low pressure (up to 100 p.s.i.) other than those used in welding, the ignition hazard is negligible. In hoses used in welding, experience shows that hoses of which the linings have a high ignition temperature ('pot' ignition temperature 370° or above) are much less liable to fire on flashback than hoses with lower ignition temperatures. Neoprene hoses have been found quite satisfactory for low pressure systems.

The hazard is more difficult to assess in high pressure systems. High local temperatures of very short duration, viz. 'hot spots', can be produced by adiabatic compression; this may happen when a cylinder is opened suddenly to discharge into a closed system. 'Hot spots' may also be created by friction through a fine leak, by friction between the rubber surface and high velocity gas streams, by electrostatic discharge and by high frequency vibrations. In high pressure supply hoses the most likely cause of 'hot spots' is adiabatic compression; the other causes are more likely to operate, if at all, in regulators.

Although it is beyond the scope of this report to prescribe standards of safety for actual equipment it is suggested that rubber hoses may be used with high pressure oxygen provided that the following minimum restrictions are strictly observed:-

1) Sudden changes in pressure are avoided.

2) The bore of the hose is free from cracks, dust, oil and fabric reinforcement.

3) The inner lining of the hose has a 'pot' ignition temperature of not less than 370°C.

4) Hoses are examined periodically to ensure that condition (2) is maintained.

CLASS III - POLYMERS.

The following materials have been included in this Section:-

1. Polythene.
2. Teflon.
3. Kel-F.
4. Polyvinylchloride.
5. Polyvinyl-alcohol.
6. Nylon. *
7. Perspex. *
8. Buna. *
9. Red Vulcanised Fibre *
10. Resin-bonded fabric *
11. Tufnol.

* indicates that the material was submitted by the Ministry of Supply.

The first eight materials have all been developed in recent years; Kel-F, in fact, is not yet readily available. The last three materials are included in this section because the bonding material is often a polymer and like the other materials included in this section they may be machined to form seats and gaskets in high pressure oxygen systems.

III.1. - Polythene (Polyethylene).

Small block samples were cut from a ½" rod of polythene and examined in oxygen at 2 litres/minute and in air at 2 to 10 litres/minute. The average ignition temperatures are given in Table 22 in which the standard deviations are shown in brackets. It will be seen that, with either oxygen or air, pressure in the range 50 to 250 atmospheres has little effect on ignition temperature, nor is there any big difference between the results with air at 10 litres/minute, and the results at 2 litres/minute, although it is interesting to note that in all cases ignition temperatures were slightly lower at the higher gas rate.

The 'pot' ignition temperature was 380°C.

TABLE 22.

Ignition Temperatures of Polythene.
(Standard deviation in brackets)

Pressure	Mean Ignition Temperature in Air. °C				Mean Ignition Temp. in Oxygen. °C	
	Flow rate - litres/min.				Flow rate - l/min	
ats.	2		10		2	
50	231	(13)	218	(10)	235	(16)
100	222	(31)	201	(20)	205	(10)
175	255	(12)	208	(9)	171	(19)
250	222	(33)	215	(27)	203	(16)

Samples of Polythene seats for oxygen regulators were examined in block form at 100 atmospheres as received, and after storage for three days at 50°C in oxygen at 100 atmospheres. It will be seen from Table 23 that the ignition temperature of these Polythene seats increased on ageing.

TABLE 23.

Ignition Temperatures of Polythene Seats.

Pressure ats.	Ignition Temperature - °C			
	As received		After accelerated ageing	
	Individual results.	Average	Individual results.	Average
100	142, 151, 191, 173, 152, 155.	161	200, 195, 188, 187, 210, 193.	196

III.2. - Teflon (Tetrafluoroethylene polymer).

This interesting material was examined in the bomb in block form and as shavings up to pressures of 250 atmospheres. Experiments were carried out in a static atmosphere and in a flow of oxygen at 2 litres/minute, but in no case was ignition recorded although the samples were heated to 350°C. In all cases the residue was translucent when removed from the bomb, but on cooling became opaque and indistinguishable from samples that had not been heated in oxygen. It was possible, however, to ignite teflon in oxygen at 1 atmosphere in the 'pot' test at abnormally high temperatures. The material could be seen burning feebly in oxygen preheated to 530°C. The results of the 'pot' test are shown in Table 24 in which 'x' indicates failure to ignite.

TABLE 24.

'Pot' Ignition Temperatures of Teflon.

Temperature °C	Ignition Time seconds	Frequency
520	x x x	0/3
530	60, 72, 70.	3/3
550	30, 28.	2/2

III.3 - Kel-F (Monochlore trifluoro-ethylene polymer).

A sample of this new material was obtained from America. Unlike Teflon it is a transparant thermoplastic, the physical properties of which can be modified by suitable treatment.

There was insufficient for high pressure tests but a little of the material was examined by the 'pot' test, when it was found to ignite at 600°C, but not at 560°C. It may be that the exact 'pot' ignition temperature is below 600°C, but it is clear that Kel-F has a higher ignition temperature than Teflon as determined by the 'pot' test. The detailed results are given in Table 25, in which 'x' indicates failure to ignite. As with Teflon the material burned feebly when ignition did occur.

TABLE 25.

'Pot' Ignition Temperetures of Kel-F

Temperature °C	Ignition Time seconds	Frequency
560	x x x	0/3
600	23, 16, 18	3/3

III.4 - Polyvinylchloride (PVC).

(a) Unplasticised:

Some polyvinylchloride in powder form, obtained from Messrs. I.C.I. Limited, was examined in high pressure oxygen flowing at 2 litres/minute. The results given in Table 26 show that the ignition temperature of PVC falls from 444° at 1 atmosphere to 204° at 100 atmospheres and 161° at 250 atmospheres; pressure clearly had a marked effect on ignition temperature, but increases in pressure above 100 atmospheres did not greatly reduce the ignition temperature.

TABLE 26.

Ignition Temperatures of Polyvinylchloride. (Unplasticised)

Pressure ats.	Ignition Temperature - °C Individual Results.	Average	Standard deviation
1	425, 450, 471, 431.	444	21
50	229, 249, 250, 239, 259, 246.	245	9
100	229, 224, 198, 210, 185, 181.	204	20
175	170, 16[illegible], 171, 162, 228, 165.	160	31
250	178, 154, 157, 158, 159, 162.	161	5

(b) Plasticised:

A sample of polyvinylchloride plasticised with tricresyl phosphate was received from the Research Association of British Rubber Manufacturers and examined in block form. The results given in Table 27 show that the plasticised material has a slightly higher ignition temperature than the unplasticised.

The 'pot' ignition temperature of the plasticised was 450°C.

TABLE 27.

Ignition Temperatures of Polyvinylchloride. (Plasticised)

Pressure ats.	Ignition Temperature - °C Individual Results.	Average	Standard deviation
50	266, 265, 280, 273, 275, 284.	274	7
100	241, 248, 248, 231, 250, 246.	244	7
250	175, 170, 200, 209, 193, 198.	191	15

III.5 - Polyvinyl-alcohol.

The first material examined, a polyvinyl-alcohol manufactured in Germany, containing phosphoric acid, had a surprisingly high ignition temperature, as can be seen from Table 28. In order to decide if resistance to ignition were conferred by the phosphoric acid, tests were carried out on specially prepared specimens free from this addition. The ignition temperatures of the latter material are shown in comparison with those of the German material in Table 28.

It will be seen that at 100 atmospheres the German material has an ignition temperature that is more than 200° higher than the material containing no phosphoric acid. At 250 atmospheres the German material failed to ignite up to temperatures of 320°C and when the samples were removed from the bomb they were in a semi-molten state with some clear liquid lying at the bottom of the boat. On cooling a brittle black residue was obtained.

TABLE 28.

Ignition Temperatures of Polyvinyl Alcohol.

Pressure	Ignition Temperature - °C			
	German sample containing phosphoric acid.		Material made at Morden containing no phosphoric acid	
ats.	Individual results.	Average	Individual results.	Average
50	443, 440, 421, 430, 390, 410.	422	300, 298, 305, 375, 361, 318, 309.	324
100	429, 442, 480, 450, 454, 472.	455	279, 237, 239, 245, 250, 225.	246
250	Failed to ignite in four experiments up to 320°C.		Not examined.	

Small samples of polyvinyl alcohol phosphorylated with phosphorus oxychloride ($POCl_3$) were prepared and examined at 250 atmospheres in oxygen in the high pressure bomb. Under these conditions the material failed to ignite at temperatures up to 350°C. The material ignited when examined by the 'pot' test at the very high temperature of 660°C. The corresponding ignition temperature for the polyvinyl alcohol before phosphorylation was 420°C.

III.6 - Nylon.

Nylon in the form of a small bar was received from the Ministry of Supply and examined in a static atmosphere and in a flow of oxygen at 2 litres/minute. The 'pot' ignition temperature of this material was 500°C and it will be seen from Table 29 that there is a marked decrease in ignition temperature as pressure is increased; at 50 atmospheres the ignition temperature was 328°C; at 100 atmospheres 249°C and at 175 atmospheres 188°C. Ignition temperature increased slightly to 219°C when the pressure was increased to 250 atmospheres. It will be seen from the table that very often only three experiments were carried out at each pressure as the amount of material available for test was small. There is no significant difference between the ignition temperatures determined under static experiments compared with the results obtained under flow conditions.

TABLE 29.

Ignition Temperatures of Nylon.

Pressure	Ignition Temperature - °C			
	Static		Flow	
ats.	Individual results.	Average.	Individual results	Average
50	321, 321, 330.	324	325, 330, 330.	328
100	252, 340, 255, 160, 210	243	235, 251, 261.	249
175	-	-	160, 203, 200.	188
250	-	-	180, 220, 221, 255.	219

Three samples of nylon used in the U.S.A. as seating material for oxygen regulators were examined by the 'pot' test. The 'pot' ignition temperatures of these American samples were in excellent agreement with those of the samples obtained from the Ministry of Supply.

III.7 - Perspex.

A perspex sheet $\frac{1}{8}$" thick was received from the Ministry of Supply and was examined in oxygen up to 250 atmospheres in block form and as shavings. When shavings were used there was a tendency for the sample to volatilise completely before ignition occurred, but it will be seen from Table 30 that ignition, when it occurred, was at substantially the same temperature as for the sample in block form.

Attempts to determine the 'pot' ignition temperature failed as the sample volatilised before ignition occurred.

TABLE 30.

Ignition Temperatures of Perspex.
(Block and Shavings)

Pressure	Ignition Temperature - °C					
	SHAVINGS Static	BLOCK Static		BLOCK Flow (2 litres/min)		
ats	Average	Individual results	Average	Individual Results	Average	Standard deviation
50	240	265, 288, 277.	277	273, 260, 283, 289, 303, 306, 302, 289, 300.	289	15
100	-	229, 242, 253.	241	282, 275, 300, 258, 300, 279, 297, 273, 288.	284	16
175	218	268, 140, 205, 218, 293, 182, 202, 195, 235, 172.	211	245, 168, 160.	191	-
250	195	199, 238, 233.	220	198, 154, 231, 212, 255, 239, 240, 230, 250.	224	32

III.8 - German Buna.

A small rod of German Buna was received from the Ministry of Supply and examined in block form and as shavings in a static atmosphere and in a flow of oxygen at 2 litres/minute. The average ignition temperatures are given in Table 31, from which it is clear that the ignition temperatures of German Buna are very considerably reduced when the sample is examined as shavings. In this form German Buna has a very low ignition temperature at moderate pressures.

TABLE 31

Ignition Temperature of German Buna.

Pressure ats.	Ignition Temperature - °C			
	SHAVINGS flowrate		SOLID BLOCK flowrate	
	Nil	2 litres/min.	Nil	2 litres/min.
1	-	254	-	464
20	189	194	294	315
50	140	162	302	349
100	133	164	-	-
175	-	-	314	258
250	126	141	-	-

With the exception of static experiments at 50 atmospheres using shavings only three experiments were carried out under any given conditions as there was a very small amount of material available. There was no material left for the determination of 'pot' ignition temperatures.

III.9 - Red Vulcanised Fibre.

Red vulcanised fibre submitted by the Ministry of Supply was examined in the bomb in air and in oxygen. The average ignition temperatures in oxygen for block samples and for shavings are given in Table 32. The results show that there is no marked difference in the ignition temperatures between the samples in the two different forms and that increasing the pressure to 250 atmospheres causes a progressive reduction in the ignition temperatures of the shavings under flow conditions. In the static experiments the effect of pressure on the ignition temperature of red vulcanised fibre in either form is slight.

The 'pot' ignition temperature of block samples was 325°C and samples of red vulcanised fibre stored at 40°C in air of relative humidity 95% increased the 'pot' ignition temperature slightly to 330°C.

TABLE 32.

Ignition Temperatures of Red Vulcanised Fibre

Pressure ats.	Ignition Temperature - °C			
	BLOCK		SHAVINGS	
	Static	Flow 2 litre/min.	Static	Flow 2 litre/min
1	-	375	-	352
50	222	272	242	273
100	220	-	212	215
175	213	210	204	189
250	212	-	211	145

Fifteen additional experiments using block samples were carried out in which the material was maintained at a steady temperature in the range 140 - 180° in oxygen at 100 atmospheres. From Table 33 it will be seen that the average ignition temperature under static conditions in oxygen at 100 atmospheres is 220°C, but in these special experiments the material ignited after a time interval varying between twenty minutes and 2½ hours on ten occasions. In five experiments no ignition occurred during storage up to 46 hours. In one case the sample appeared unchanged and it was returned to the bomb for the determination of its ignition temperature, under static conditions, at a pressure of 100 atmospheres. It was found to ignite at 105°C which is the lowest ignition temperature recorded during the course of the experimental programme. These special experiments indicate that the ignition temperature of red vulcanised fibre is appreciably affected by maintaining the sample in oxygen at about 150°C.

Experiments were also carried out on block samples in air flowing at 2 and 10 litres/minute up to pressures of 250 atmospheres. Results are given in Table 33 from which it will be seen that in all cases lower ignition temperatures were recorded at the higher flow rate. All the experiments in air were carried out on samples in block form.

TABLE 33.

Ignition Temperatures of Red Vulcanised Fibre in Air

Pressure ats.	Ignition Temperature - °C					
	Flowrate - 2 litres/minute			Flowrate - 10 litres/minute		
	Individual results	Average	Standard Dev.	Individual results.	Average	Standard Dev.
50	300, 307, 290, 283, 300, 275.	293	12	233, 233, 244, 241, 243, 250.	242	7
100	270, 269, 275, 275, 280.	274	5	238, 225, 225, 211, 250, 237.	231	11
175	267, 255, 238, 241, 236.	247	13	172, 204, 234, 205, 180, 224.	203	24
250	231, 249, 282, 231, 237.	246	21	200, 208, 182, 247, 220, 166.	204	29

III.10 - Resin-bonded Fabric.

This material was examined in block form only in oxygen and in air up to 250 atmospheres. The results are given in Table 34 from which it will be seen that increasing pressure reduces ignition temperature in all cases and that the ignition temperatures in air are appreciably greater at any given pressure than in oxygen.

TABLE 34.

Ignition Temperatures of Resin-bonded Fabric.

Pressure	Ignition Temperature - °C					
	IN OXYGEN				IN AIR	
	Static		Flow - 2 lit/min.		Flow - 2 lit./min.	
ats.	Individual results	Average	Individual results	Average	Individual results	Average
50	212, 210, 208.	210	262, 243, 235.	246	-	-
100	219, 183, 200.	201	195, 193, 197, 197, 179, 200, 232, 200, 221.	201	238, 256, 259, 250, 250, 244, 253.	250
250	193, 160, 140, 150,	161	160, 176, 162, 177, 170, 175, 200, 198, 188.	179	261, 219, 230, 217, 242.	234

The 'pot' ignition temperature of the material was 320°C. Storage of the material for eleven days at 40°C in air of relative humidity 95% increases the 'pot' ignition temperature slightly to 325°C. The 'pot' ignition temperature in air was 360°C.

In two special experiments block samples were maintained in the high pressure bomb at 150°C for sixteen hours in oxygen at 100 atmospheres pressure. The material did not ignite during this period and after removing the samples from the bomb they appeared unchanged. One of the samples was weighed before and after storage in the bomb and was found to have changed in weight only from 0.1011 gm. to 0.1019 gm.

III.11 - Tufnol.

Block samples prepared from Tufnol sheet were examined in high pressure oxygen. The ignition temperatures given in Table 35 show a progressive decrease under flow conditions as the pressure is increased from 50 to 175 atmospheres.

TABLE 35.

Ignition Temperatures of Tufnol.

Pressure	Ignition Temperature - °C					
	STATIC			FLOW - 2 litres/minute		
ats	Individual results.	Average	Standard deviation	Individual results	Average	Standard deviation
50	289, 281, 266, 300, 281.	283	13	240, 248, 280, 350, 270, 360.	291	51
100	292, 258, 241.	264	26	269, 265, 210.	248	33
175	-	-	-	159, 197, 180, 156, 161, 173.	171	15

Class III - DISCUSSION.

The materials included in this section are of considerable interest since many of them have been developed recently and may replace some of the more conventional materials included in Class IV. Examination of the results suggests the following conclusions:-

1) The fluorinated ethylene polymers, Teflon and Kel-F, and polyvinyl alcohol phosphorylated with $POCl_3$ have extremely high ignition temperatures and for practical purposes may be considered non-inflammable. Judged by resistance to ignition these materials should prove extremely useful for making valve seats, gaskets and possibly inner linings for hoses, provided that fabrication difficulties and cost do not present insuperable obstacles.

2) In oxygen at 100 atmospheres polythene, unplasticised polyvinylchloride, German Buna shavings and Resin bonded fabric can be ignited at 200°C or below; Tufnol, German Buna in block form, perspex, nylon and polyvinylchloride plasticised with tricresyl phosphate ignited at about 250°C. Increasing the oxygen pressure to 175 atmospheres reduced the ignition temperatures of all the materials but with polythene, nylon and perspex a further increase in pressure to 250 atmospheres caused a small, but significant, increase in the ignition temperature.

3) Perspex, German Buna and the red vulcanised fibre were all examined in block form and as shavings. The ignition temperature of shavings of German Buna were very much lower at any given pressure than the same material in block form, e.g. at 50 atmospheres shavings ignited at 162°C compared with an average ignition temperature of 349°C when the Buna was in block form. No significant differences were observed with perspex and red vulcanised fibre between the ignition temperatures of the block and shredded samples.

4) The ignition temperatures of polythene, red vulcanised fibre, and resin bonded fabric in air were in general rather higher than the ignition temperatures obtained in pure oxygen. There seems to be no definite relationship between the partial pressure of the oxygen and the ignition temperature of these materials.

5) Ignition temperatures obtained under static conditions in oxygen do not vary greatly from the results obtained at the same pressure when the oxygen is flowing at 2 litres/minute. In some cases the ignition temperature was increased slightly, in others decreased slightly. Increasing the flowrate from 2 to 10 litres/minute when using air led to a significant reduction in ignition temperature in all cases. With red vulcanised fibre this reduction was of the order of 50°C.

6) The special ageing experiments carried out with some selected materials provided interesting results, but unfortunately they do not yield general conclusions. The resin bonded fabric for example appeared unaffected by storage at 150°C in oxygen at 100 atmospheres for periods up to 16 hours. Red vulcanised fibre on the other hand ignited in oxygen at 100 atmospheres after an 'induction period' between 20 minutes and $2\frac{1}{2}$ hours at about 60°C below the normal ignition temperature.

f) The 'pot' ignition temperatures were found to give some indication as to the relative order of ignition temperature in high pressure oxygen. In the following table the 'pot' ignition temperatures are compared with the average ignition temperatures in oxygen at 100 atmospheres. The arrangement of the materials in order of increasing 'pot' ignition temperature is substantially the same as the arrangement in order of increasing ignition temperature in oxygen at 100 atmospheres. The differences in 'pot' ignition temperature as the table is descended is much greater than the corresponding differences in the ignition temperature at 100 atmospheres. If ignition temperatures were a complete index of resistance to ignition in oxygen at high pressure it is clear that the 'pot' test would be more sensitive than the high pressure test.

TABLE 36

Material	'Pot' Ignition Temperature, °C	Ignition Temp. in Oxygen at 100 ats, °C
Resin bonded fabric	320	201
Red vulcanised fibre	325	215
Polythene	380	205
Polyvinyl-acetate	420	246
Polyvinylchloride (plasticised)	450	244
Nylon	500	249
Teflon	530	> 350
Polyvinyl-alcohol ($POCL_3$)	660	

CLASS IV - VALVE SEATS AND REGULATOR DIAPHRAGMS.

A number of materials intended for use either as valve seats or as diaphragms in cylinder regulators manufactured by the British Oxygen Company were examined. In most cases details of formulation were unknown. For the presentation of results these materials are classified as follows:-

1. GACO Seats.
2. Beeswaxed Leather Washers.
3. Grey Horn Fibre Seats.
4. Rubber Seats
   (a) Ebonite
   (b) Soft Rubber.
5. Rubber Diaphragms.

IV.1 - GACO Seats.

Two samples of GACO seats, Grades E.90 and H.22 made by the George Angus Company were examined in high pressure oxygen as received and after accelerated ageing; the results are presented in Table 37. Accelerated ageing was carried out by storing the materials in copper tubes for three days in oxygen at 100 atmospheres and 50°C. In a previous attempt at accelerated ageing several materials included in this section had been stored for 44 days in oxygen at 100 atmospheres. The samples were contained in small copper tubes maintained at 80°C. Many of the materials were completely decomposed by this treatment but the GACO seats were only slightly affected. The H.22 samples become slightly tacky but the E.90 samples were virtually unchanged. In view of the complete decompostion of most materials during this drastic treatment milder conditions (storage for three days at 50°C) were subsequently used.

TABLE 37.

Ignition Temperatures of GACO Seats.

Pressure	Ignition Temperature - °C			
	H.22.		E.90.	
ats.	As received.	After ageing.	As received.	After ageing
50	400	-	-	-
100	331	349	287	243
250	182	-	-	-

The 'pot' ignition temperatures of both the GACO samples were quite high and were above 390°C.

IV.2 - Beeswaxed Leather Washers.

The ignition temperatures were determined in oxygen at 100 atmospheres as received, after leaving in air in the laboratory for three months and after storage for three days at 50°C in oxygen at 100 atmospheres. The results are given in Table 38, although the average ignition temperature is little changed by storage at 50°C in high pressure oxygen it will be seen from the results of individual experiments that after storage in high pressure oxygen the material has a very variable ignition temperature and may ignite at as low a temperature as 180°C. Storage for 44 days at 80°C in oxygen at 100 atmospheres decomposed the samples completely. A fine powdery residue, bearing no resemblance to the original material, was removed from the copper storage tube.

TABLE 38.

Ignition Temperatures of Beeswaxed Leather Washers.

Description of Sample	Pressure ats.	Ignition Temperature - °C Individual results.	Average	Standard deviation
As received	100	186, 163, 217, 204, 207, 208.	197	19
After three months in air at room temperature	100	195, 193, 200, 205, 205, 195.	199	5
After three days at 50°C in oxygen at 100 atmospheres.	100	250, 120, 193, 118, 187, 237.	184	56

The 'pot' ignition temperature of the material was 335°C.

IV.3 - Grey Horn Fibre Seats.

Five different samples of grey horn fibre were received. The ignition temperatures were determined under flow conditions in oxygen at 100 atmospheres on samples as received, and in three cases after ageing for six months in a steel bomb maintained at the ambient temperature containing oxygen at 100 atmospheres. Table 39 gives the minimum 'pot' ignition temperatures and the average ignition temperatures at 100 atmospheres. In all cases reproducibility of results was good.

TABLE 39.

Ignition Temperatures of Grey Horn Fibre Seats.

Code No. of Sample	Minimum 'pot' ignition Temp. °C	Ignition Temperature in oxygen at 100 atmospheres - °C As received	After ageing for 6 months in oxygen at 100 atmospheres.
A/61452/E	-	222	252
B/50799/E	-	244	230
6/50801/E	330	223 *	-
8/50967/E	350	258	220
18/00000/E	330	232	-

* this sample was also examined at 50 atmospheres when the ignition temperature was found to be 247°C

The results indicate that a prolonged storage in oxygen does not affect the samples greatly and that the samples from different sources ignite at about the same temperature. While the 'pot' ignition temperatures are quite low, the ignition temperatures at 100 atmospheres are relatively high, and it appears that the ignition temperature of grey horn fibre is not greatly affected by increase in oxygen pressure.

IV.4 - Rubber Seats.

(a) Ebonite:

A sample of ebonite made by the Northern Rubber Company was examined in a flow of oxygen up to pressures of 250 atmospheres The detailed results are given in Table 40 and show that the ignition temperature at 50 atmospheres is quite low, and there is small reduction in the ignition temperature as the pressure is increased to 250 atmospheres. The material has the low 'pot' ignition temperature of 315°C.

TABLE 40

Ignition Temperatures of Ebonite (Code No. 16/00000/E)

Pressure ats.	Ignition Temperature - °C Individual results.	Average	Standard deviation
50	200, 181, 176, 171, 181, 183.	182	10
100	175, 158, 159, 164, 158, 156.	162	7
175	147, 134, 142, 142, 142, 159.	144	8
250	148, 144, 156, 138, 161, 130.	146	10

Another sample of ebonite obtained from the Indiarubber Gutta Percha Company (Code No. 11/80136/E) was examined at 100 atmospheres and found to ignite at 307°C. This is a considerably higher temperature than the ignition temperature given in Table 40. The minimum 'pot' ignition temperature was also quite high at 420°C. Unfortunately the composition of these ebonite samples is not known, but it is clear that ebonite from different sources may have very widely different ignition characteristics.

(b) Soft Rubber Seats:

Samples of soft rubber seats for use in regulators or in safety valves were examined in a flow of oxygen at 100 atmospheres. The average ignition temperatures and the minimum 'pot' ignition temperatures are given in Table 41.

TABLE 41.

Ignition Temperatures of Soft Rubber Seats.

Code No. of Sample.	Supplier.	Colour	Minimum 'pot' ignition Temp. °C	Ignition Temp. at 100 ats. °C
9/35153/E	Andre Rubber Co.	Black	300	146
50864	Andre Rubber Co.	Black	-	178
19/45618/E	Leyland	Red	360	176
7/31939/E	Hendell Co.	Grey	375	146

IV.5 - Diaphragms.

Rubber diaphragms about 3¼ inches diameter form an important part of the second (low pressure) stage of two-stage regulators. Several diaphragms were received for examination and the ignition temperatures were determined in a flow of oxygen at 100 atmospheres, as received, and in some cases after

storage for 3 days in oxygen at 100 atmospheres at 50°C. In some cases the ignition temperature was also determined at 50 atmospheres. The results are given in Table 42.

TABLE 42.

Ignition Temperatures of Diaphragms.

Code No. of Sample.	Description of Sample.	Minimum 'pot' ignition temp. °C	Ignition Temperature °C		
			as received 50 ats.	100 ats.	aged 100 ats.
1/32222/E	Andre Co. Black rubber containing 3 layers of fabric.	320	215	192	175
2/35141/E*	Heinke Co. Red rubber	370	-	160	-
3/31921/E	Andre Co. Black rubber containing 2 layers of fabric	340	242	142	138
4/51626/E	Andre Co. Black rubber containing 3 layers of fabric	310	-	179	-
5/35141/E	Heinke Co. Red rubber containing 2 layers of fabric.	340	-	166	-
14/32222/E	Leyland & Birmingham Grey rubber containing 3 layers of fabric.	340	244	178	167
15/31921/E	Leyland & Birmingham Grey rubber containing 2 layers of fabric	330	236	153	193

* The ignition temperature of this material in a flow of oxygen at 250 atmospheres was 137°C

Class IV - DISCUSSION.

All the materials reported in this section have been used in oxygen regulators as valves or diaphragms controlling the flow of gas from cylinders at high pressures, into the supply lines at low pressure. The frequency of fires in oxygen regulators is certainly very low, but because the number of regulators in use is large a number of fires originating in regulators have occurred. While it has not been possible to trace with any certainty the exact cause of these incidents it seems beyond doubt that a small portion of inflammable material inside the regulator has been raised to its ignition temperature; the results presented in this section indicate that the ignition temperature for many regulator materials is of the order of 150°C in oxygen at 100 atmospheres.

The more resistant materials in this class were the GACO sheets, grey horn fibre sheets and the ebonite obtained from the Indiarubber Gutta Percha Company, the 'pot' and high pressure ignition temperatures of the other materials were low.

The 'pot' ignition temperature of grey horn fibre was relatively low at 330°C yet all the grey fibres examined in oxygen at 100 atmospheres had ignition temperatures above 220°C. This material is the only one examined which has an ignition temperature

in high pressure oxygen considerably higher than would be expected from its 'pot' ignition temperature.

J.K.Mabbs examined the behaviour of a large number of regulator seat materials in high pressure oxygen. His work is presented fully in "Report to the Oxygen Regulator Research Committee of the Compressed Gas Manufacturers Association on the Investigation of Oxygen Regulator Seat Materials" dated November 15th 1923. Unfortunately he did not find the exact ignition temperature in high pressure oxygen, but heated samples to 100°, 200° and 300°C to determine to the nearest 100° the temperature at which the material was consumed. It is not possible, therefore, to compare the results obtained by Mabbs at high pressure with those presented in this report, but he did determine a few ignition temperatures in a flow of oxygen at 1 atmosphere. In the case of hard rubber Mabbs found the ignition temperature to be in the range of 340 - 415°C; the average ignition temperature of nine samples was 384°C. The most interesting feature of Mabbs' work is that he demonstrated that, with the exception of the metals and animal ivory in block form, all the materials he tested could be fired by adiabatic compression of oxygen to about 2000 p.s.i. Materials ignited in this manner included casein compounds, fibres, bakelite impregnated materials, hard rubber, vegetable ivory and celluloid.

The following conclusions are taken from Mabbs' report:-

"The investigation has shown that all practicable seat materials for oxygen pressure regulators are combustible under conditions which may occur occasionally in service. The two interdependent causes for ignition of the seat are:-

1 - Heat generated by the sudden compression of oxygen or air in the high pressure inlet tube of a regulator,

2 - Small separated or protruding fibres of the material on the surface of the seat exposed to the high pressure gas.

The ideal solution for the elimination of this fire and explosion hazard would be a metal seat; but up to the present, however, no alloy has been formulated which has the desirable seating characteristics of hard rubber. The efforts of regulator manufacturers should be concentrated upon the development of a satisfactory metal seat."

Some of the materials included in Class III of this report, e.g. teflon and polyvinyl-alcohol phosphorylated with $POCl_3$, have very much higher ignition temperatures than the materials tested by Mabbs, and it is likely that valve seats made from these materials will be as safe to use in high pressure oxygen, as metal seats.

CLASS V - METALS AND ALLOYS.

The following metals all supplied by the Ministry of Supply were examined:-

Dural,
Magnesium Alloy,
Magnesium Powder,
Copper Turnings,
Brass Turnings,
Mild Steel Turnings,

None of the metals examined in high pressure oxygen ignited. In most experiments the samples were weighed before and after the experiments, but as will be seen from Table 43, changes in weight were negligible.

TABLE 43.

Metal.	Temperature at end of experiment °C	Oxygen Pressure atm.	Weight in grams. Before	After
Dural	450	50	0.075	0.075
	450	100	0.0853	0.0850
	400	175	0.0843	0.0839
	300	250	0.0755	0.0752
	300	250	0.0733	0.0730
Magnesium Alloy	420	175	-	-
	300	250	0.0348	0.0348
Magnesium Powder	360	100	-	-
Copper Turnings	300	250	0.0981	0.0981
Brass Turnings	300	250	-	-
	300	250	0.0411	0.0407
Mild Steel Turnings	300	250	0.0550	0.0549
	300	250	0.0455	0.0455

Special experiments were carried out with magnesium alloy, mild steel turnings and with copper turnings. About .05 gm. of each of the metals was placed in the sample boat to which was added a small amount of aircraft lubricating oil supplied by the Ministry of Supply and reported in Class I. The weights of metal and oil were carefully determined. The boat was placed in the high pressure bomb in the normal manner and ignition temperatures determined in oxygen at 250 atmospheres. In all cases ignition occurred at a temperature corresponding to the normal ignition temperature of the oil. Examination of the residue showed that the oil was completely consumed and the metal oxidised. The weight of the residue was determined. The following results for copper turnings are typical:-

Weight of copper turnings	-	0.0609 gms.
Weight of lubricating oil	-	0.0253 "
Weight of residue	-	0.0718 "
Ignition Temperature	-	211°C

The increase in weight of the copper was bigger than that required to convert all the copper to Cu_2O. The residue consisted of black copper oxide with a small portion of unoxidised copper.

Class V - DISCUSSION.

Under the conditions used in these experiments none of the metals ignited when heated alone in oxygen; nor were they oxidised appreciably. If small quantities of aircraft lubricating oil were included with the metals the ignition of the oil occurred normally and raised the temperature sufficiently to ignite the metal. M.D.Hersey in his paper entitled "The Study of Oxygen-Oil Explosion Hazard" 1924, reports the ignition temperatures of copper, brass and iron in high pressure oxygen. In all cases increases in pressure up to 100 atmospheres caused progressive reduction of the ignition temperatures. Increases in pressure above about 100 atmospheres caused no further reduction below 825°C of the ignition temperature of copper. The ignition temperature of brass, at pressures above 50 atmospheres was slightly less than that of copper. The ignition temperature of iron falls approximately linearly with pressure from about 935° at 1 atmosphere to 600° at about 150 atmospheres pressure. Hersey recommends that copper or brass be used in preference to iron in the construction of gas manifolds used in high pressure oxygen systems.

GENERAL DISCUSSION

The objective of the work described in this report was the determination of the ignition temperatures of selected materials in oxygen at pressures up to 250 atmospheres and to study the influence thereon of a number of variables. In the five preceeding sections the results obtained have been reported fully and it is proposed to review those results briefly.

None of the materials examined ignited spontaneously in oxygen at pressures up to 250 atmospheres. For ignition to occur the samples had to be heated to at least 100°C and in some cases (e.g. the metals, Teflon) they failed to ignite at the highest pressures even if heated to 350°C.

Increases in pressure above atmospheric led to a marked reduction in ignition temperature for practically all materials except those in Class I (lubricants and thread sealing compounds) the ignition temperatures of which were relatively unaffected by pressure changes in the range 50 - 250 atmospheres. A number of materials, e.g. Tufnol, resin bonded fabric, polyvinyl chloride, neoprene, hycar and I.C.I. standard rubber showed a progressive fall in ignition temperature as the pressure was increased to 250 atmospheres. With most other materials except those in Class I the reduction was appreciable in the pressure range up to 100 atmospheres but increases in pressure above 100 atmospheres had a much smaller effect.

With the few exceptions discussed in the report the effect on ignition temperature of variables other than pressure was not pronounced.

The reproducibility of the results for different materials under given conditions varied considerably. The standard deviations of the individual results from the mean were generally between 10° and 30°, but in a few cases were as much as 50°C. Although average results have been used freely in this report, it may well be that the lowest ignition temperature recorded for any given material is of greater significance in assessing the ignition hazard; in many cases the individual results have therefore been quoted. Reproducibility of results obtained by the 'pot' test was good and 'pot' ignition temperatures were determined with most materials to within 5°. The 'pot' temperature gave a good qualitative indication of the ignition temperature in high pressure oxygen.

As none of the materials examined ignited spontaneously in oxygen except when heated to a fairly high temperature, it is necessary in considering the ignition hazard that may arise in high pressure oxygen systems to understand how the temperature can be raised sufficiently inside a closed system for the least resistant material present to attain its ignition temperature. In such systems under dynamic conditions the pressure of the gas falls as the gas passes along the system. The free energy of all gases falls with pressure and in certain circumstances this decrease in free energy can be converted by one or more steps into heat. For example if gas from a cylinder at high pressure is allowed to pass into a closed vessel at a lower pressure the gas entering the vessel compresses the gas initially present in the vessel. The compressed gas is warmed at the expense of the free energy of the expanding gas. Normally the heat of compression is dissipated rapidly without any material increase in the temperature of any part of the system but if the cylinder is opened suddenly the compression of the gas at the lower pressure is substantially adiabatic and may result in a considerable increase in temperature. Although this increase in temperature is transient and the quantity of heat generated is small, adiabatic compression may cause the temperature of a small part of the system

to be raised to the level at which ignition occurs. Apart from adiabatic compression, the free energy of the high pressure gas may also be converted into heat (a) by friction in narrow channels in which the gas moves at high velocity relatively to its surroundings, (b) by causing a part of the system to vibrate at high frequency or (c) by electrostatic discharge. It is not easy to estimate the temperature that can be attained except in the case of adiabatic compression in which the maximum temperature can be calculated readily from the thermodynamic properties of the gas. For example if oxygen at room temperature is compressed adiabatically so that its pressure is increased ten times the temperature of the gas will exceed 400°C.

The possibility of fires in high pressure oxygen systems would be largely avoided by measures that would prevent conversion of the free energy of the compressed gas into heat. If this could be achieved in the design of equipment then the ignition characteristics of the materials that come into contact with the oxygen would be of secondary importance. Until this ideal is reached, safety in the use of high pressure oxygen will depend not only on the selection of materials with a high ignition temperature, but on careful attention to the design of the apparatus, and upon the observance of a number of elementary but essential precautions. As the starting-point of combustion will clearly be determined by the material of lowest ignition temperature which happens to be present, it is important to exclude carefully all traces of organic dust and oil. Particles of dust and fibre introduce a special hazard in connection with the temperature rise which occurs on adiabatic compression in a closed tube. In this case the rise in temperature of the gas may be considerable, but its heat capacity is small. The gas is therefore unable to raise appreciably the temperature of any massive body with which it is in contact, and its heat is rapidly dissipated. A small particle of fibre in the gas stream, however, can be raised to a temperature approaching that of the gas, and can therefore readily be ignited. When this occurs it will cause the ignition of any other inflammable material in its vicinity.

The work described in this report does not provide a basis for choice of materials for use in high pressure oxygen without regard to the circumstances of use, but it is hoped that it will serve as a useful guide for the selection of the best materials for a particular duty, and the range of conditions under which they can be safely used.

APPENDIX I.

FIRE IN HIGH PRESSURE BOMB.

The incident described in this Appendix occurred during experiment No.201 in which the ignition temperature of 0.1 gm. of aircraft lubricating oil was being determined according to the method described in the Report. The experiment was carried out in oxygen at a pressure of 250 atmospheres and the gas was flowing through the apparatus at the rate of 2 litres/minute.

Description of Incident:

About 30 seconds after the start of the experiment a failure occurred in the heating system caused by a short circuit; the fuses were blown and the ammeter and voltmeter readings fell to zero. A few seconds later there was a very loud report accompanied by a sudden release of pressure from the bomb. After dismantling the apparatus it was found that the tufnol washers, part of the copper connector and most of the steel gland had been burnt away. The neighbouring gland had been scorched and the high pressure line feeding oxygen to the bomb was split. Figure IA shows in detail the arrangement of the electrical lead into the bomb before and after the incident. The photographs illustrate the damage caused to the various parts. The damage caused to the stainless steel gland was particularly severe and the incident confirms that normally "safe" materials like stainless steel can be made to ignite in high pressure oxygen.

Probable Explanation of the Fire:

It is certain that the incident described above was initiated by a short circuit between the electrical lead and the bomb. It is believed that a spark caused by the short circuit ignited the tufnol washer on the inner side of the copper connector. Combustion was at first relatively slow as the products of combustion had no means of escape. Eventually the second tufnol washer on the other side of the copper connector was ignited and when this was partially burned the products of combustion were swept away into the atmosphere by a flow of clean high pressure oxygen. The remaining tufnol washer then began to burn vigorously and in the atmosphere of high pressure oxygen a temperature was reached which caused the steel to melt and burn.

Steps taken to avoid recurrence:

The tufnol washers were replaced by similar washers made in teflon (poly-tetrafluoroethylene) the ignition characteristics of which are described in the main Report.

The ends of the copper connector were extended so that if a break occurred the lead would not come into contact with the bomb near the washers.

The steps taken to avoid a similar incident were quite satisfactory and no further trouble with the electrical lead was experienced in the 2000 subsequent experiments.

APPENDIX II.

EXPLOSION IN EXIT TUBE FROM BOMB.

The incident described in this Appendix occurred during experiment No.1151 in which the ignition temperature of 0.1 gm. of silicone grease D.C.41 was being determined in oxygen at a pressure of 250 atmospheres flowing at a rate of 2 litres/minutes.

Description of Incident:

About four minutes after the commencement of the experiment when the temperature recorder was registering a temperature of 331°C a violent explosion occurred and the pressure in the system fell immediately to atmospheric. On inspection it was found that the copper exit tube (⅛" O.D. x 1/16" I.D.) conducting gas away from the bomb had burst in a number of places. Most of the bursts were spaced at about 1" apart and all occurred in the first 42" of the exit tube. The damage to the copper pressure tube is shown quite clearly in the accompanying photograph.

The boat containing the sample and the thermocouple and its glass sheath were intact, but the ignition tube was cracked at one end.

Probable Explanation of the Explosion:

Hot gases leaving the bomb pass to waste through the copper pressure tube which is, for most of its length, at the ambient temperature. Before any sample reaches the ignition temperature fuming generally occurs giving rise to volatile decompostion products which are carried forward from the reaction tube and may be condensed in the exit line. In this particular instance it is believed that ignition commenced in the normal manner inside the bomb but the reaction tube and part of the exit tube near the bomb contained an explosive mixture which was ignited following the ignition of the main sample in the bomb. The explosion in the copper tube was intensified by the presence of combustible decomposition products which resulted in the copper tube bursting in several places.

Steps taken to avoid recurrence:

After this incident the exit tube was replaced and cleaned with trichlorethylene after every 100 experiments.

MG/JLS.
24.5.50.

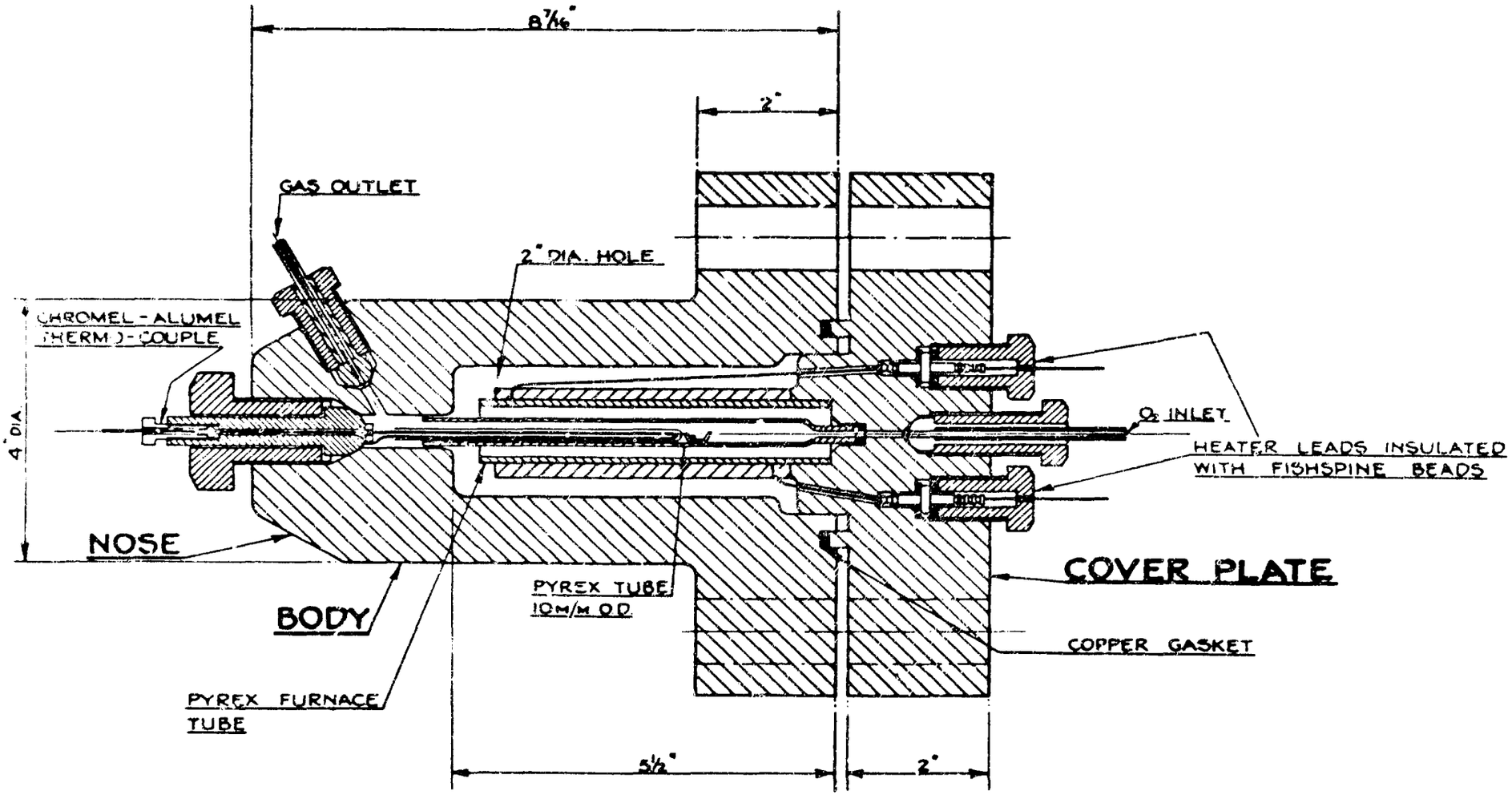

FIG. 1

HIGH PRESSURE BOMB ASSEMBLY

T.Q. 522

FIGURE. 1A

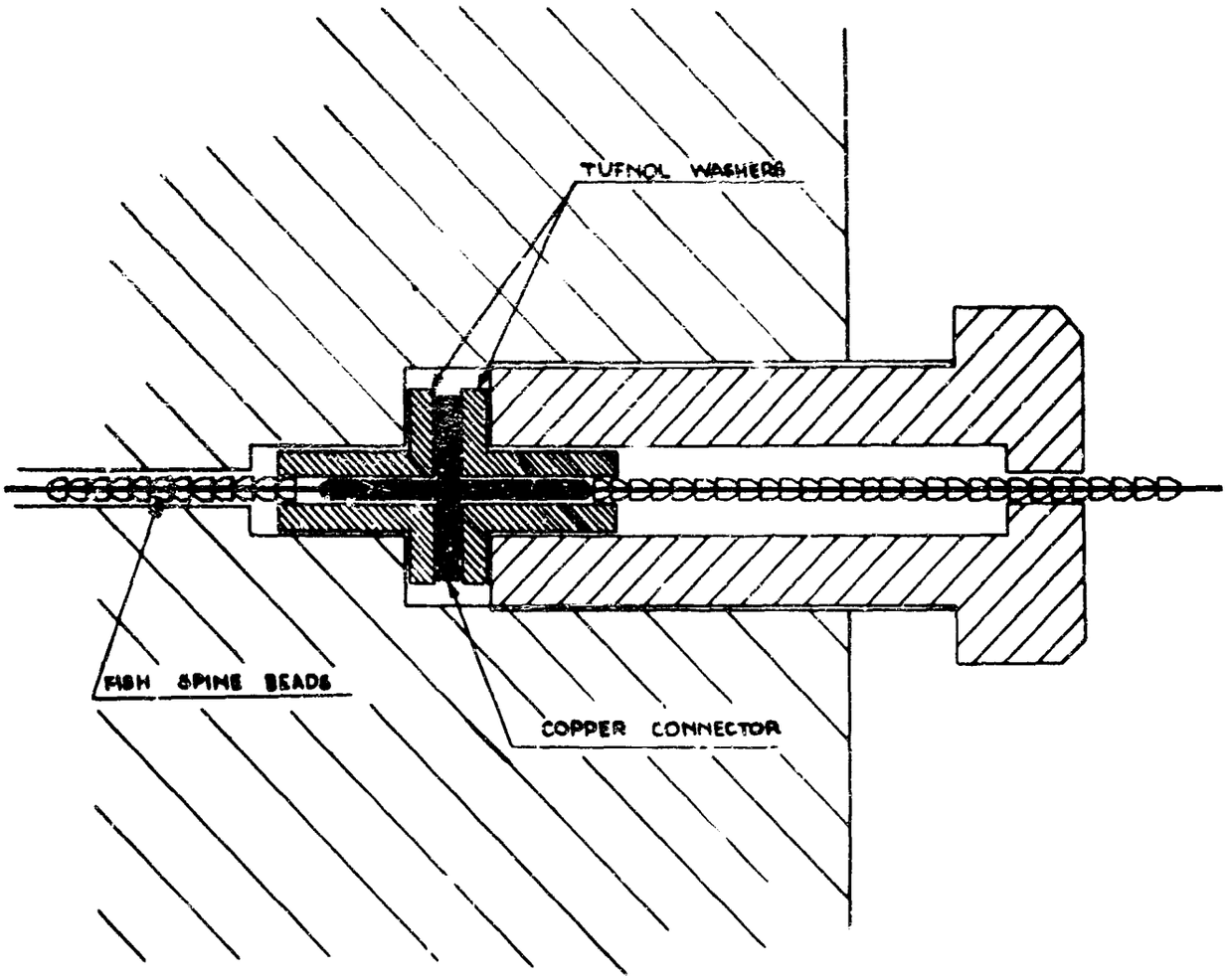

ORIGINAL ARRANGEMENT OF ELECTRICAL LEAD INTO BOMB, BEFORE FIRE

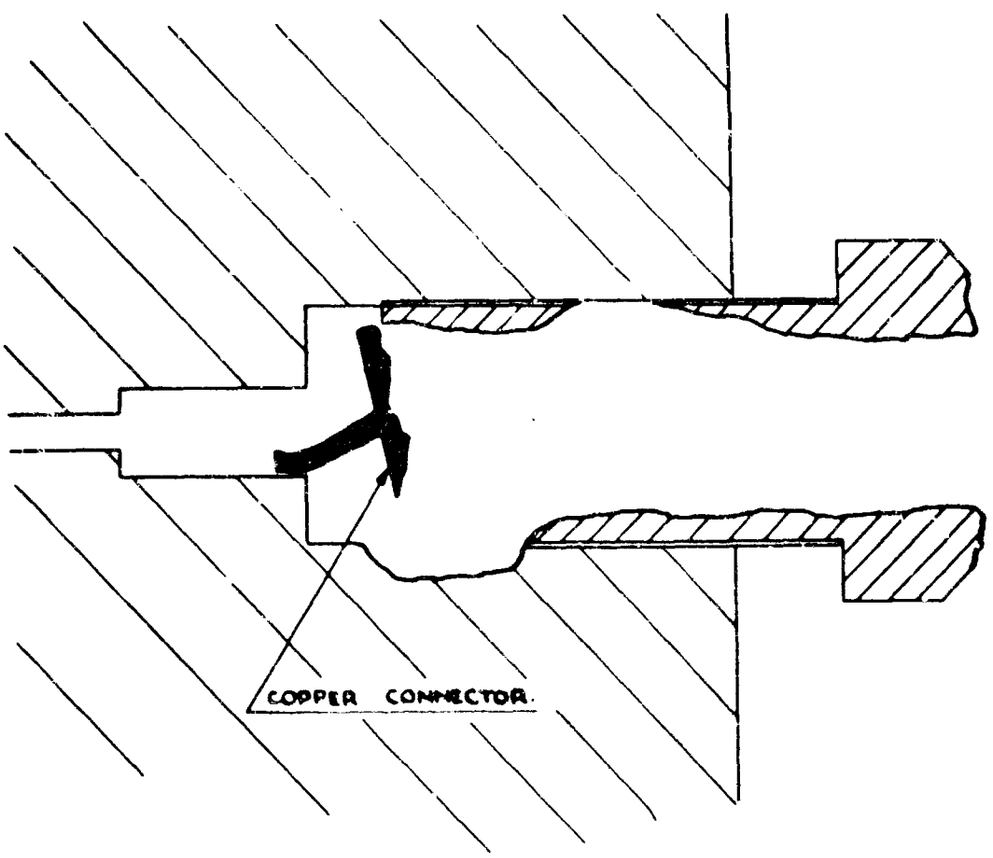

ELECTRICAL LEAD INTO BOMB. AFTER FIRE

FIG. 2

ARRANGEMENT OF ELECTRICAL LEADS INTO BOMB

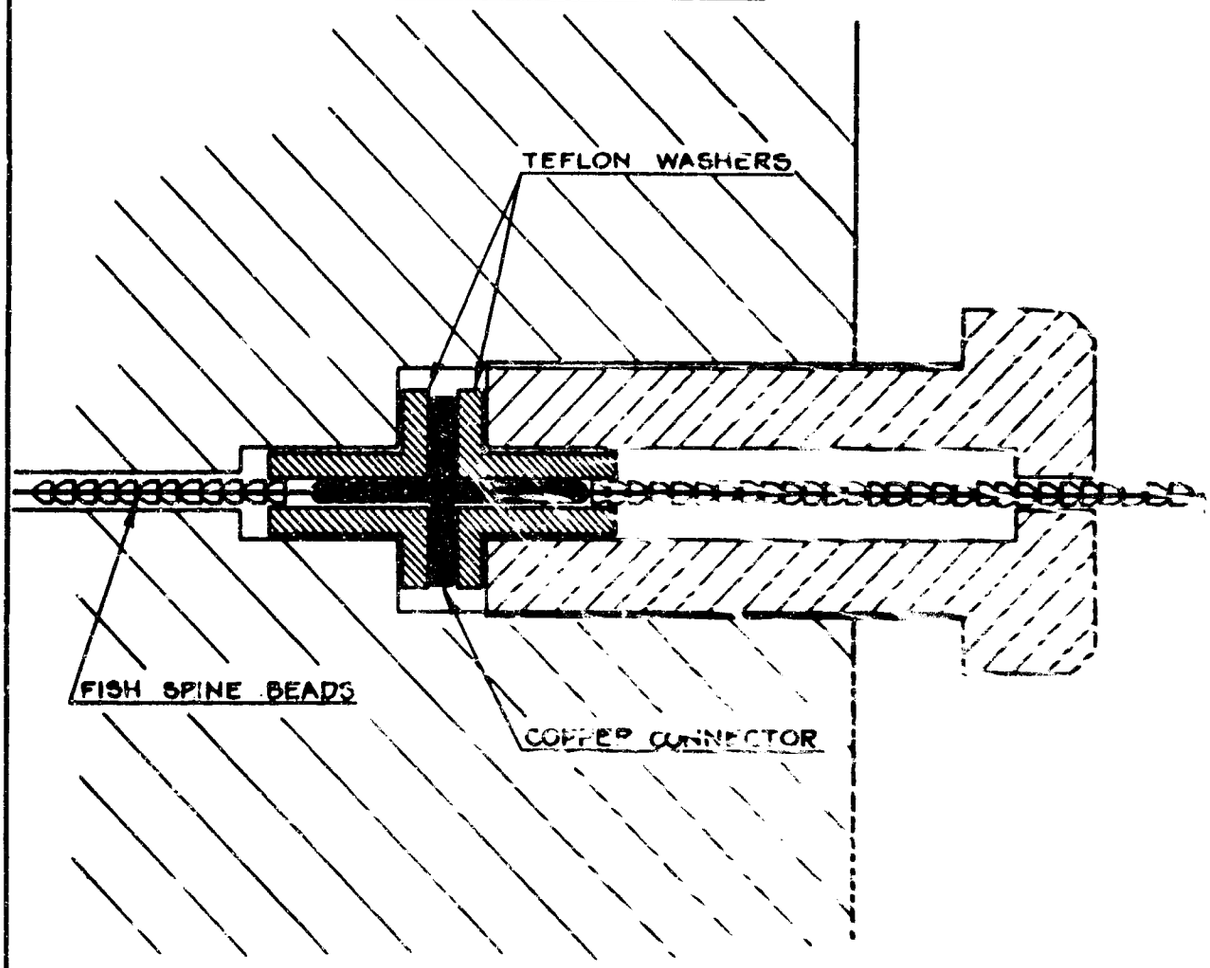

FIG. 3

FURNACE FOR HI IGNITION BOMB

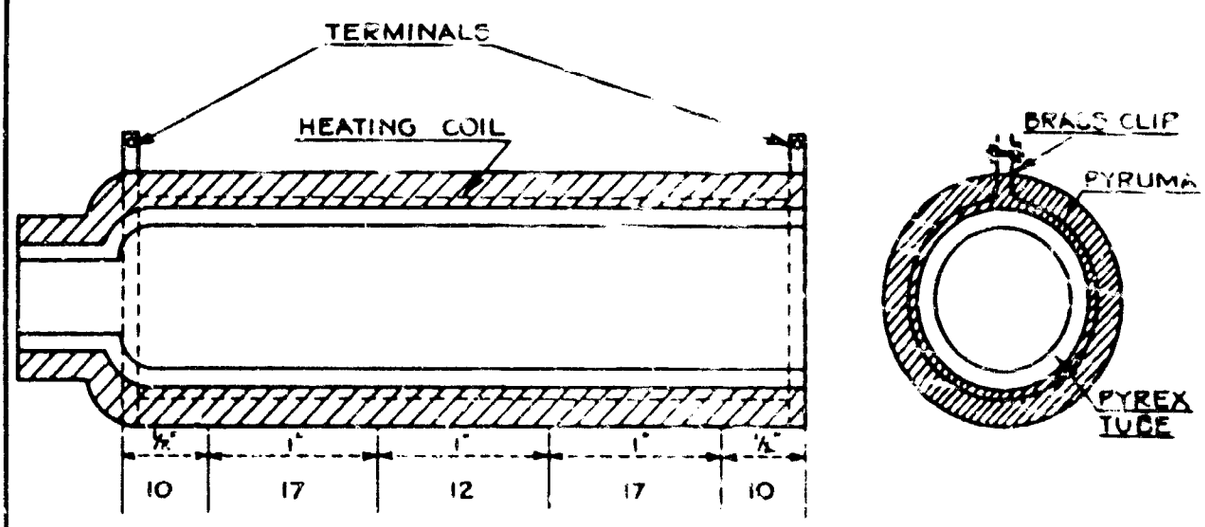

66 TURNS OF 28 GAUGE BRIGHTRAY WIRE WOUND AS SHOWN

SIZE OF GLASS TUBE O.D. 26mm I.D. 20mm.

FIG. 4

THERMO-COUPLE FOR H.P. BOMB

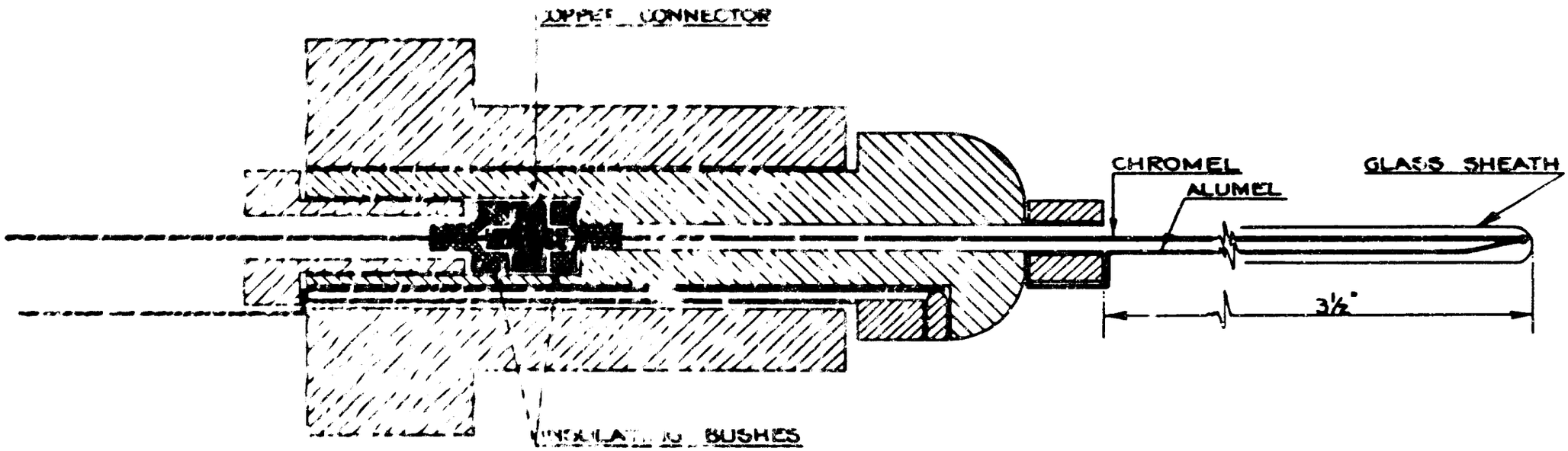

SCALE:- TWICE FULL SIZE

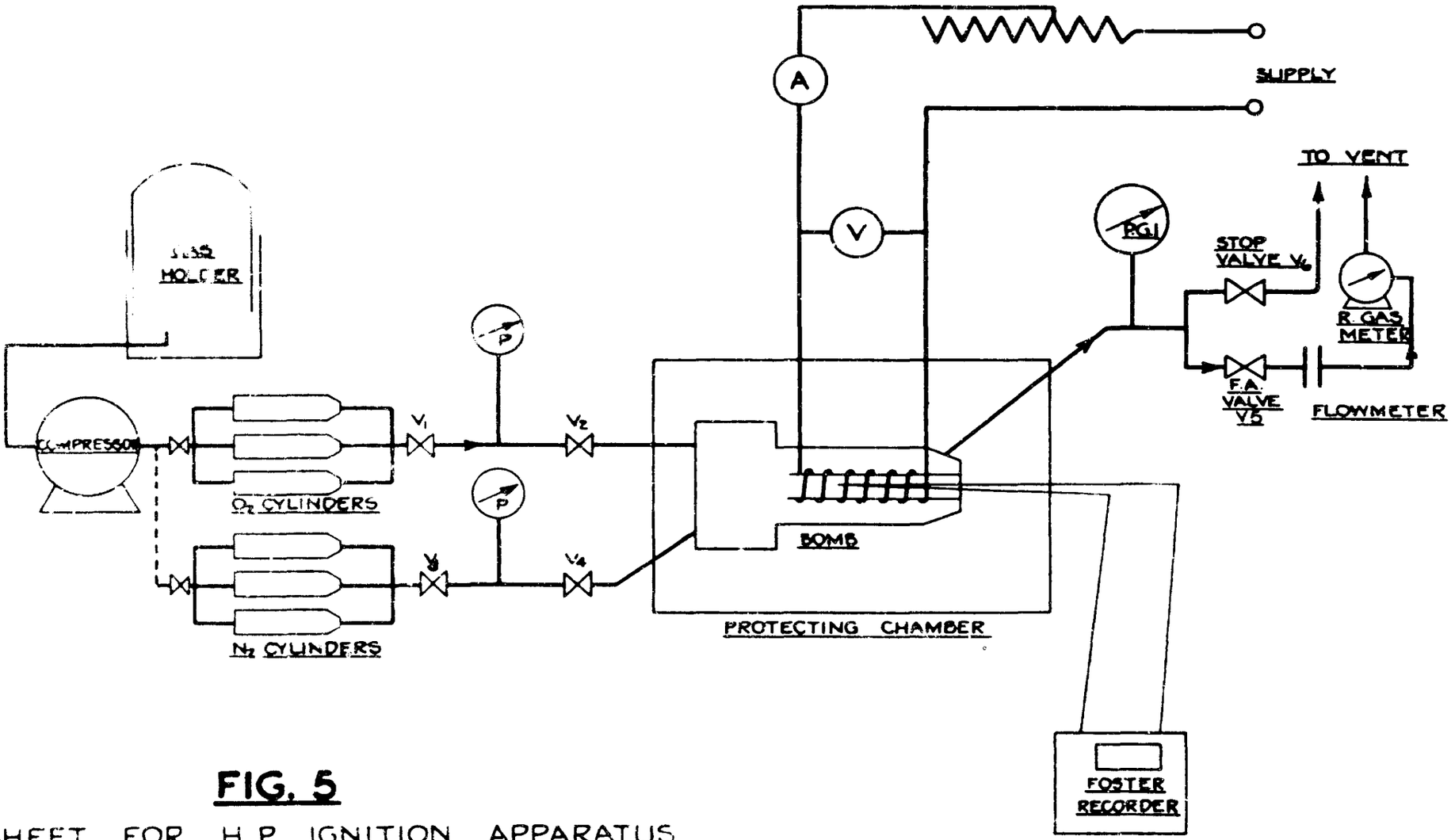

FIG. 5

FLOWSHEET FOR H.P. IGNITION APPARATUS

T.O. 509

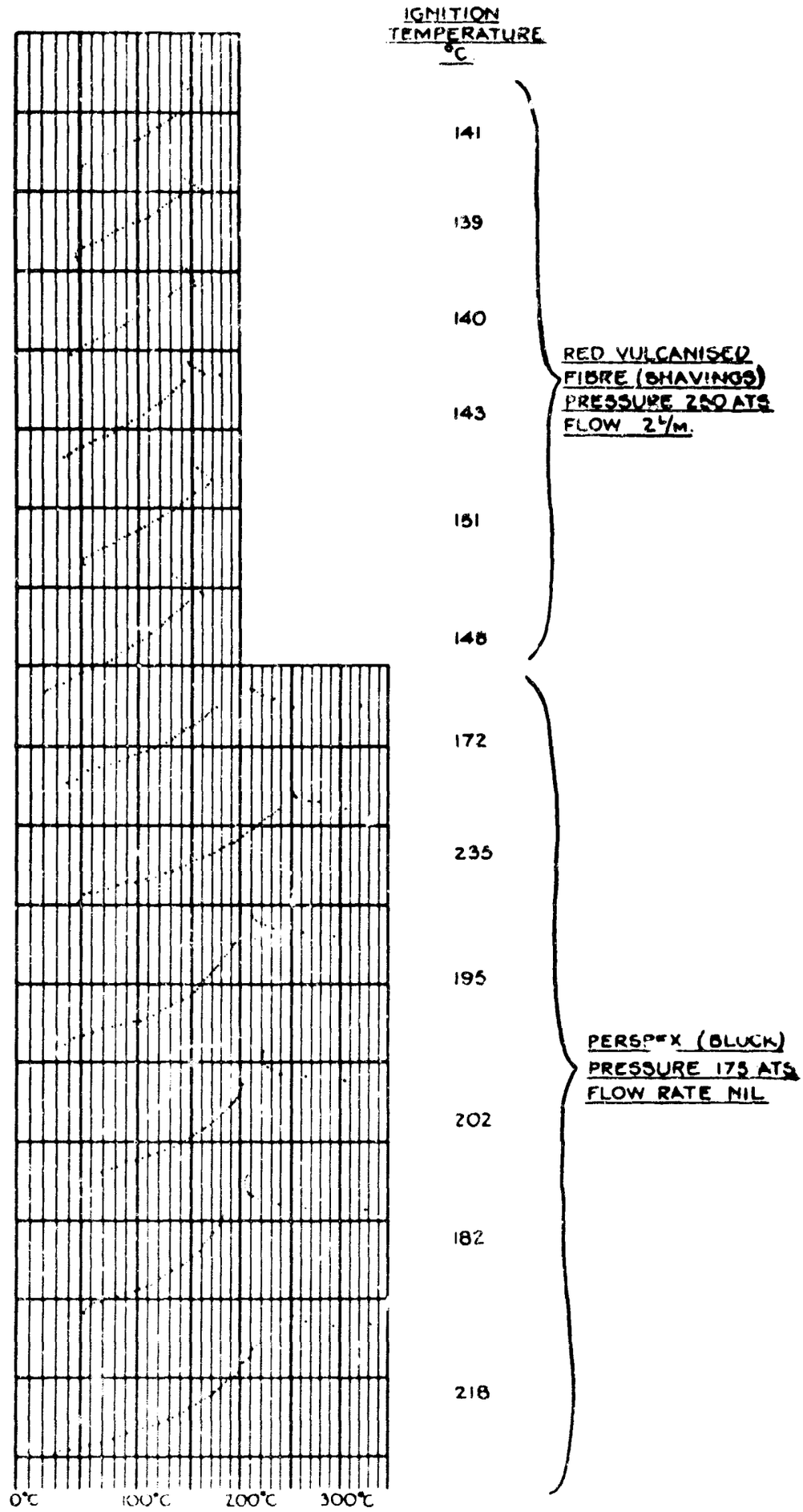

FIG. 6

TEMPERATURE - TIME CURVES OBTAINED WITH H.P. APPARATUS

TO 510

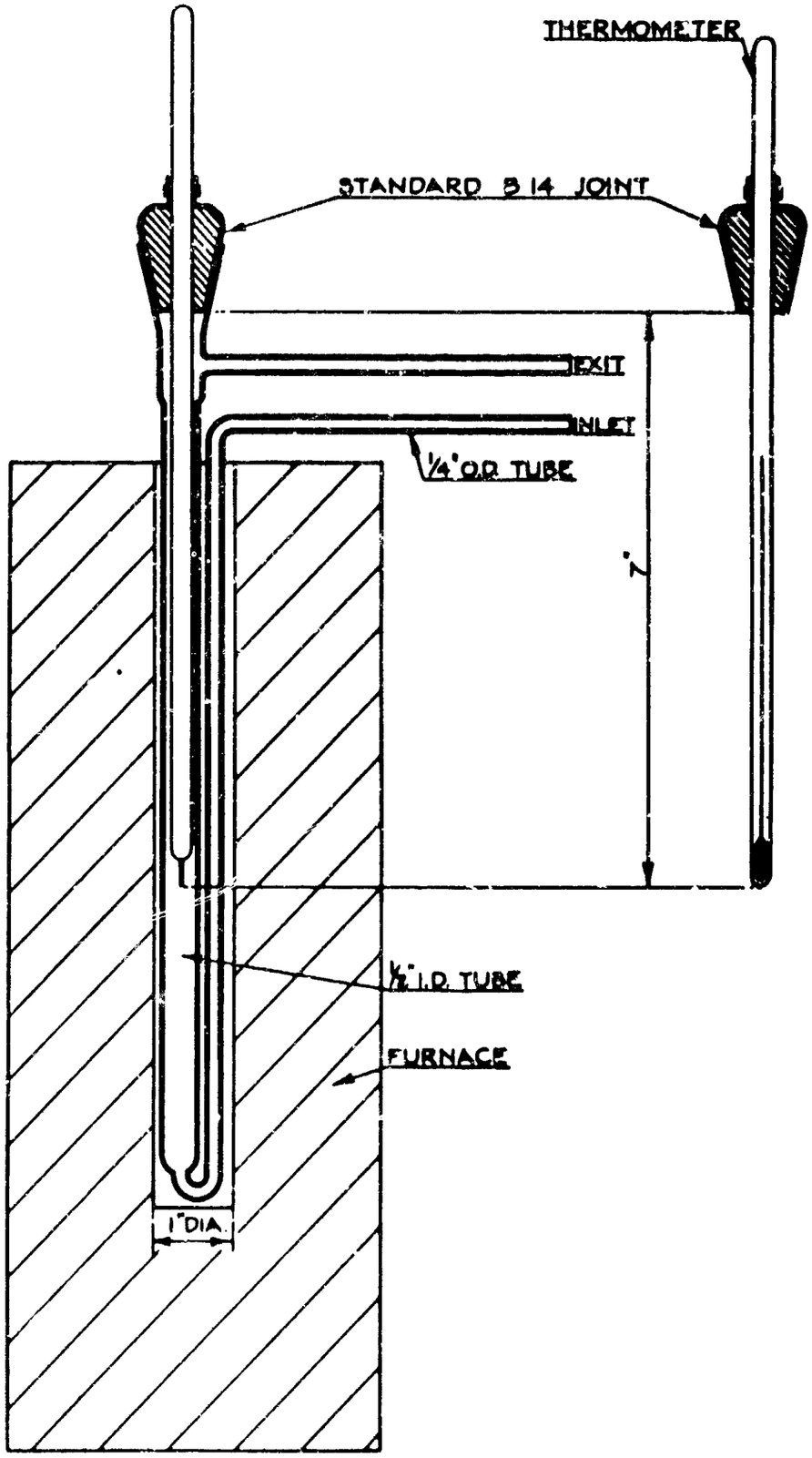

DIAGRAM OF APPARATUS

FOR 'POT' IGNITION EXPERIMENTS

FIG. 7

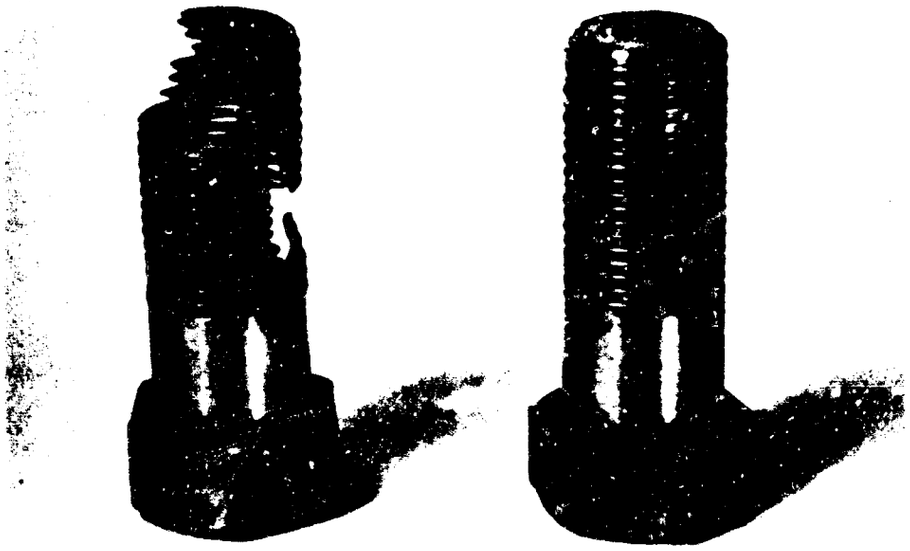

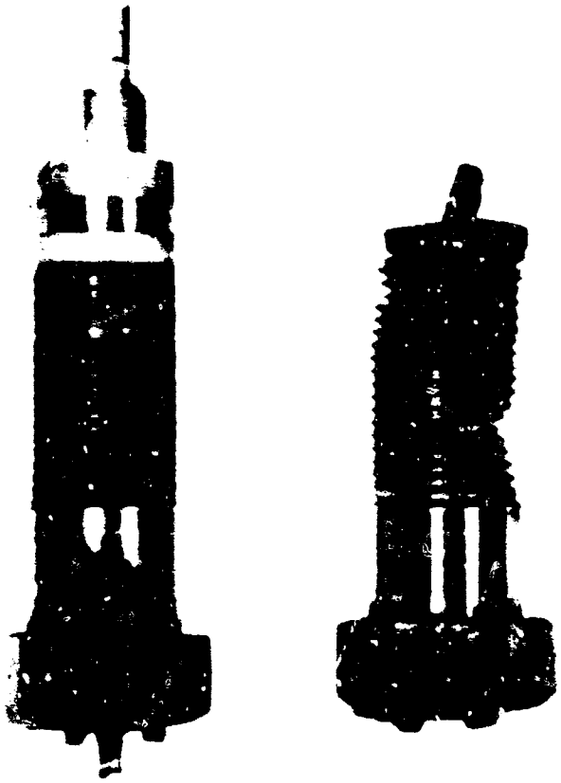

Bost Available Co