AD648497

ARL 66-0178
SEPTEMBER 1966

Aerospace Research Laboratories

TURBULENT HEAT TRANSFER IN THE THERMAL ENTRANCE REGION OF A PERFECTLY INSULATED PIPE

J. W. GORESH
R. G. DUNN
FLUID DYNAMICS FACILITIES RESEARCH LABORATORY

Project No. 7065

D D C
RECEIVED
MAR 20 1967

Distribution of this document is unlimited

OFFICE OF AEROSPACE RESEARCH
United States Air Force

ARCHIVE COPY

NOTICES

When Government drawings, specifications, or other data are used for any purpose other than in connection with a definitely related Government procurement operation, the United States Government thereby incurs no responsibility nor any obligation whatsoever; and the fact that the Government may have formulated, furnished, or in any way supplied the said drawings, specifications, or other data, is not to be regarded by implication or otherwise as in any manner licensing the holder or any other person or corporation, or conveying any rights or permission to manufacture, use, or sell any patented invention that may in any way be related thereto.

- - - - - - - - - -

Qualified requesters may obtain copies of this report from the Defense Documentation Center, (DDC), Cameron Station, Alexandria, Virginia. **All others should apply to the Clearinghouse for Scientific and Technical Information.**

CFSTI
DDC
UNANNOUNCED
JUSTIFICATION Per statement on Doc
BY
DISTRIBUTION/AVAILABILITY CODES
DIST. AVAIL. and/or SPECIAL
1

- - - - - - - - - -

Copies of ARL Technical Documentary Reports should not be returned to Aerospace Research Laboratories unless return is required by security considerations, contractual obligations or notices on a specified document.

300 - February 1967 - C0192-20-412

ARL 66-0178

TURBULENT HEAT TRANSFER IN THE THERMAL ENTRANCE REGION OF A PERFECTLY INSULATED PIPE

J. W. GORESH
R. G. DUNN

FLUID DYNAMICS FACILITIES RESEARCH LABORATORY

SEPTEMBER 1966

Project 7065

Distribution of this document is unlimited

AEROSPACE RESEARCH LABORATORIES
OFFICE OF AEROSPACE RESEARCH
UNITED STATES AIR FORCE
WRIGHT-PATTERSON AIR FORCE BASE, OHIO

FOREWORD

This technical report was prepared by John W. Goresh and Robert G. Dunn, Fluid Dynamics Facilities Research Laboratory, Aerospace Research Laboratories, Wright-Patterson Air Force Base, Ohio, on Project 7065, "Aerospace Simulation Techniques Research," under the direction of Mr. Elmer G. Johnson, Director of the Laboratory.

The authors wish to extend their gratitude to Henry E. Fettis and James C. Caslin of the Applied Mathematics Research Laboratory for their helpful suggestions in formulating the analytical expressions and adapting these to numerical computations. We also express our indebtedness to Mrs. Karen Thompson for her assistance in typing the report.

ABSTRACT

The problem considered is that of finding the thermal entrance or thermal mixing region of a pipe where the wall heat flux is zero along the length of the pipe. The fluid is assumed to enter the pipe with a non-uniform temperature profile and a fully developed turbulent velocity profile.

The approach is analogous to that introduced by Fettis for the solution of the uniform wall temperature problem.

The results for different radii tubes and Reynolds numbers are presented in graphs which show the adjustment of the temperature profile down the pipe. These results provide information concerning the minimum length mixing tube, since any wall losses will require a greater length.

TABLE OF CONTENTS

SECTION		PAGE
	FOREWORD	ii
	ABSTRACT	iii
I	INTRODUCTION	1
II	STATEMENT OF THE PROBLEM	3
III	ANALYSIS	5
IV	DISCUSSION AND CONCLUSIONS	13
	REFERENCES	15
	APPENDIX	16
	TABLES AND FIGURES	

LIST OF FIGURES

FIGURE		PAGE
1	Schematic Diagram Showing the Coordinates Used	23
2	Centerline Temperature Variation With Non-Dimensional Axial Length	24
3	Variation of Mixing Length with Initial Reynolds Number	25
4	Radial Temperature Profiles at Different Axial Positions for the Tube Radius, R=0.375"	26
5	Radial Profiles for R=0.500"	27
6	Radial Profiles for R=0.750"	28
7	Radial Profiles for R-1.000"	29
8	Radial Profiles for R=1.250"	30
9	Radial Profiles for R=1.500"	31

LIST OF TABLES

TABLE		PAGE
I	Variation of the Exponential Decay Factor with Reynolds Number	32

NOMENCLATURE

A_{mn}	defined by Equation 40
A_n	arbitrary constants
a,b,c	constants defined directly under Equation 15
C_p	specific heat
C_n	coefficients defined by Equation 30
D	pipe diameter
D_n	constants defined by Equation 12
exp	designates exponential
f(r)	function defined by Equation 43
$g_n(z)$	eigenfunctions for Equation 7
h	heat transfer coefficient
k	conductivity of the gas
k_w	conductivity of the gas at the wall
L_ℓ	mixing length $\left(\frac{x}{D}\right)_\ell$
Pr	Prandtl number = $\frac{C_p \mu}{k}$

p	parameter defined by Equation 27
q	total heat flux
q_r	radial heat flux
q_w	flux along the inner wall surface
R	pipe radius
R_o	Non-dimensionalizing pipe radius
r	radial coordinate
$\bar{r}$	non-dimensional radius $\frac{r}{R}$
Re	entrance Reynolds number
U_R	effective thermal conductance considered at the radius of the inner tube surface
u	velocity of the fluid stream in the direction of flow
V	average velocity
x	axial coordinate
$\frac{x}{D}$	dimensionless axial length
α, γ	constants defined directly under Equation 25
β	parameter which is proportional to the exponential decay factor for the temperature in the axial direction

Γ	gamma function
∂	indicates partial differentiation
θ	temperature difference between the local temperature and the temperature at the inner wall
θ_i	temperature at $x = 0$ and $r = 0$
θ_o	entrance temperature distribution
λ_n	eigenvalues for Equation 13
μ	dynamic viscosity
ν	kinematic viscosity
ρ	density of the gas
$\sum$	refers to a summation
Φ_n	eigenfunctions for Equation 13
ω_n	eigenvalues for Equation 7

I. INTRODUCTION

The problem of heat transfer in fully established turbulent flow in cylindrical tubes has received considerable attention.[3-7] In all cases the flow Reynolds number is sufficiently large to justify the assumption of negligible axial conduction in the fluid. As a consequence, many of the mathematical investigations were reduced to solving an eigenvalue problem with the wall temperature taking the form of a step function. Once this was accomplished, other boundary conditions such as prescribed heat flux or prescribed wall temperature variation were included by the method of superposition. The case of a perfectly insulated tube wall is considered in this paper.

The fluid enters the pipe with a non-uniform temperature and a fully developed turbulent velocity profile. At succeeding axial stations, due to the radial conduction and turbulent mixing, the temperature will deviate from the entering profile until a uniform distribution is approximately achieved. Pipes with this length are used as mixing tubes and the adjustment or damping of the temperature profile is important in estimating the exit temperature profiles of shorter tubes.

The analysis is similar in the general mathematical approach to that presented by Latzko[1] and Fettis[2] for an isothermal wall. They assumed a one-seventh power velocity profile, a simplified eddy diffusivity and a Prandtl number of unity. However,

Latzko[1] obtained crude approximations to the first three eigenvalues by using Legendre polynomials, while Fettis[2] obtained good estimates of the same three eigenvalues by the use of Jacobi polynomials.

II. STATEMENT OF THE PROBLEM

A schematic diagram showing the coordinate system is given in Figure 1. We shall consider the section of pipe to the right of $x = 0$, where the wall heat flux is equal to zero. The flow possesses a fully developed turbulent velocity profile and a selected entrance temperature profile at $x = 0$.

Subject to the limitations given below, the steady state energy equation is:

$$\rho C_p u \frac{\partial \theta}{\partial x} = \frac{1}{r} \frac{\partial}{\partial r}(r q_r) \qquad (1)$$

where q_r is the radial heat flux, positive in the $+r$ direction.

In writing the energy equation (1), the usual basic assumptions are adopted:

a. The fluid properties are assumed constant.

b. Viscous dissipation is negligible.

c. Axial diffusion of heat is negligible compared to the axial convection.

d. The flow is hydrodynamically fully developed.

The statement of the problem is completed when the initial and boundary conditions are specified for the function $\theta(r,x)$.

At the inner surface of the pipe, we have:

$$k_w \frac{\partial \theta(r,x)}{\partial r}\bigg|_{r=R} = q_w = 0 \qquad (2)$$

where k_w and q_w represent the gas conductivity and flux at the wall, respectively.

The fluid temperature at the entrance (i.e., at x = 0) is given by the following:

$$\theta(r,0) = \theta_0 = \theta_i\left(1-\left(\frac{r}{R}\right)^2\right)^2 \qquad (2a)$$

Equations 1, 2 and 2a, and also the imposed condition that no infinite temperature exists, constitute the mathematical statement of the problem.

III. ANALYSIS

In a previous paper, Latzko's differential equation from Equation (1)

$$\frac{\partial}{\partial r}\left\{r\left(\frac{R^2-r^2}{2R}\right)^{6/7}\right\}\frac{\partial\theta}{\partial r}=pr\left\{1-\left(\frac{r}{R}\right)^2\right\}^{1/7}\frac{\partial\theta}{\partial x} \tag{3}$$

for convective heat transfer in fully developed turbulent flow with a velocity profile represented by the equation

$$u=\tfrac{8}{7}V\left\{1-\left(\frac{r}{R}\right)^2\right\}^{1/7} \tag{3a}$$

was solved subject to the following boundary condition at the wall:

$$q_r=U_r\,\theta \tag{4}$$

The present paper considers the same equation (3), but with the boundary condition q = 0 at the wall. This condition when the inlet temperature profile is constant leads to a trivial solution. In order to obtain a non-trivial solution, an initial temperature represented by the function

$$\theta=\theta_i\left(1-\bar{r}^2\right)^2=\theta_i z^{14} \tag{5}$$

is used, where $\bar{r}$ is defined as the non-dimensional radius, $\frac{r}{R}$, and

$$z = \left[1 - \left(\frac{r}{R}\right)^2\right]^{1/7}$$

A solution to Equation 3 can be written in the form

$$\theta = g(r)\ \exp(-\beta x) \tag{6}$$

and, since the fluid temperature and wall temperature asymptotically approach each other as the pipe length increases, β must be positive. When the solution as given by Equation 6, is inserted into Equation 3 and use is made of the non-dimensional radial transformation previously defined as z, the differential equation (3) becomes

$$\frac{d}{dz}\left(1 - z^7\right)\frac{dg}{dz} = -\omega z^7 g \tag{7}$$

where ω is defined as $\frac{49}{4}\beta^2$

A procedure analogous to that used by Fettis[2] for the isothermal wall problem was followed in obtaining a solution to equation 7 for this case, where the surface heat flux is zero. The appropriate boundary condition is:

$$\frac{\partial g}{\partial z} = 0 \text{ at } z = 0 \tag{8}$$

In addition, because of the singularity in Equation 7, i.e., when z = 1, it is necessary to require that the function g be finite at the centerline of the pipe.

Solutions of Equation 7 which satisfy the above requirement and boundary condition will exist only for discrete values of ω and have the form

$$\theta = \sum_{n=0}^{n=\infty} D_n g_n(z) \exp\left(-\frac{\omega_n}{pR}\right)x \tag{9}$$

where g(z) is the eigenfunction solution of Equation 7. The constants "D" must be determined to satisfy the initial condition $\theta(z,0) = \theta_0$, where θ_0 is prescribed entrance temperature profile. This may be accomplished by use of the orthogonality property of the eigenfunctions, $g_n(z)$, that is

$$\int_0^1 z^7 g_n(z) g_m(z)\, dz = 0 \tag{10}$$

when $m \neq n$. Setting,

$$\sum_{n=0}^{n=\infty} D_n g_n(z) = \theta_0 \tag{11}$$

we find that

$$D_n = \frac{\int_0^1 \theta_0 z^7 g_n(z)\, dz}{\int_0^1 z^7 g_n^2(z)\, dz} \tag{12}$$

Before obtaining the solution of Equation 7, we wish to consider the solution of the auxiliary equation

$$\frac{d}{dz}\left(1-z^7\right)\frac{dg}{dz} = -\lambda z^5 g \tag{13}$$

which is similar, but not identical, to Equation 7. With the change of variable $t=z^7$, Equation 13 becomes an equation of the hypergeometric type:

$$t(1-t)\frac{d^2g}{dt^2} + \left(\frac{6}{7} - \frac{13}{7}t\right)\frac{dg}{dt} + \frac{\lambda}{49} g = 0 \tag{14}$$

The details for obtaining the eigenvalues and eigenfunctions for Equation 14 are given in the Appendix.

Now assume that a solution of Equation 7 can be found in the form

$$g_n(z) = \sum_{n=0}^{N} D_n \, \Phi_n(z) \tag{15}$$

If Equation 15 is substituted into Equation 7, we obtain

$$\sum_{n=0}^{N} D_n \left[\frac{d}{dz}(1-z^7)\frac{d\Phi_n}{dz} + \omega_n z^7 \Phi_n \right] = 0 \tag{16}$$

Because the eigenfunctions Φ_n also satisfy the auxiliary Equation 13, Equation 16 becomes

$$\sum_{n=0}^{N} D_n \left[\lambda_n z^5 \Phi_n(z) - \omega_n z^7 \Phi_n(z) \right] = 0 \tag{17}$$

We can now make use of the Galerkin method to determine the D_n by requiring that the left side of Equation 17 be orthogonal to the Φ_n for $n = 0, 1, 2 \ldots N$, thus arriving at the following system of equations:

$$\sum_{n=0}^{N} D_n \left[\sigma_{mn} - \omega A_{mn} \right] = 0 \tag{18}$$

for $m = 0, 1 \ldots N$, with A_{mn} defined by the equation

$$A_{mn} = \int_0^1 z^7 \Phi_m(z) \Phi_n(z) dz \tag{19}$$

The characteristic equation of the system given by Equation 18 is the determinant

$$\sum_{n=0}^{N} D_n \left[\sigma_{mn} - \omega_n A_{mn} \right] = 0 \tag{20}$$

The roots of Equation 20 give approximations to the first n eigenvalues of Equation 7, and the complete solution to Equation 3 is given by Equation 9.

In the present case, where the $\Phi_n(z)$ and therefore the $g_n(z)$ are expressed as polynomials, the coefficients D_n can be obtained explicitly provided the initial temperature distribution can also be described by a polynomial. For example, a suitable entrance temperature profile could be represented by the function

$$\theta_i f(\bar{r}) = \theta_i (1 - \bar{r}^2)^2 = \theta_i z^{14} \tag{21}$$

By equating like powers of the function z^7, we obtain the following system of algebraic equations for the D_n:

$$\begin{aligned}
D_o \quad & +0.26688\, D_1 + 0.22691\, D_2 + 0.19413\, D_3 + 0.32980\, D_4 = 0 \\
& -0.31298\, D_1 - 0.68164\, D_2 - 0.98781\, D_3 - 5.42133\, D_4 = 0 \\
& -0.86258\, D_1 - 1.51668\, D_2 - 2.83335\, D_3 + 21.29747\, D_4 = 1 \\
& +0.51278\, D_1 + 2.63729\, D_2 + 11.27409\, D_3 - 30.31206\, D_4 = 0 \\
& -0.18864\, D_1 - 0.36071\, D_2 - 7.95572\, D_3 + 14.22400\, D_4 = 0
\end{aligned} \tag{22}$$

Solving the last four of Equations 22 for the coefficients D_n, we obtain

$$\left.\begin{aligned} D_1 &= -1.19346 \\ D_2 &= 0.25817 \\ D_3 &= 0.061657 \\ D_4 &= 0.025205 \end{aligned}\right\} \quad (23)$$

Substituting these four values for the coefficients D_1 through D_4 into the first of Equations 22, we obtain for D_o the numerical value

$$D_o = 0.23965 \quad (24)$$

The complete solution as given by Equation 9 can now be written in the form

$$\frac{\theta}{\theta_i} = D_o + D_1 g_1 \exp\left(\frac{\beta_1^2}{pR}x\right) + D_2 g_2 \exp\left(-\frac{\beta_2^2}{pR}x\right) + D_3 g_3 \exp\left(-\frac{\beta_3^2}{pR}x\right) + D_4 g_4 \exp\left(\frac{\beta_4^2}{pR}x\right) \quad (25)$$

or

$$\frac{\theta}{\theta_1} = 0.23965 - 1.9346 \exp\left(-\frac{\beta_1^2}{pR}x\right)\Big[0.26688 - 0.31298z^7$$

$$-0.86258z^{14} + 0.51278z^{21} - 0.18864z^{28}\Big]$$

$$+0.25817 \exp\left(-\frac{\beta_2^2}{pR}x\right)\Big[0.22691 - 0.68164z^7$$

$$-1.51668z^{14} + 2.63729z^{21} - 0.36071z^{28}\Big]$$

$$+0.06166 \exp\left(-\frac{\beta_3^2}{pR}x\right)\Big[0.19413 - 0.98781z^7$$

$$-2.83335z^{14} + 11.27409z^{21} - 7.95572z^{28}\Big]$$

$$+0.025205 \exp\left(-\frac{\beta_4^2}{pR}x\right)\Big[0.32980 - 5.42133z^7$$

$$+21.29747z^{14} - 30.31206z^{21} + 14.22400z^{28}\Big] \qquad (26)$$

where

$$p = \frac{8 \times 2^{\frac{5}{7}}}{7 \times 0.199} Re^{\frac{1}{4}} \qquad (27)$$

and R represents the inner wall radius.

IV. DISCUSSION AND CONCLUSIONS

The approach employed in obtaining a solution to Equation 3 for the specified boundary condition was analogous to that first used by Fettis[2] in solving the isothermal problem with a uniform entrance temperature profile. However, to obtain a non-trivial solution for the present case it was necessary to assume that the fluid entering the pipe had a non-uniform temperature profile. The eigenvalues ω_n and the eigenfunctions ϕ_n remain unchanged for any profile chosen, because neither depend on the initial temperature distribution. In the chosen numerical example, the initial temperature distribution was represented by the following equation:

$$\theta(\bar{r},o)=\theta_i f(\bar{r})=\theta_i(1-\bar{r}^2)^2 \qquad (28)$$

where θ_i is the initial centerline temperature. The centerline temperature as a function of length-to-diameter ratio is presented in graphical form for several pipe diameters in Figure 2, and in Figure 3 the mixing lengths for various initial Reynolds numbers are shown. All the presented data are for a fixed mass flow, pressure and entrance centerline temperature. The results show that as the Reynolds number increases the mixing length increases. The adjustments of the temperature profile from a radial variation to a uniform distribution at succeeding axial stations are also presented in Figures 4 through 9. The variations of the exponential decay factor "β^2" with

Reynolds number are given in Table I.

The engineer is often required to design mixing tubes with varying degrees of wall heat losses. Thus, these calculations give the length of a perfectly insulated mixing tube for turbulent flow. This is the minimum length mixing tube, since any wall losses will require a greater length. Calculations for non-perfectly insulated pipes were presented in Reference 8. In the solution for non-perfectly insulated pipes, non-uniform entrance temperature profiles were not considered.

REFERENCES

1. Latzko, H., NACA TM 1068 (1944); original in German.

2. Fettis, H. E., "On the Eigenvalues of Latzko's Differential Equation," ZAMM, Vol. 37, Nos. 9, 10, (Sept./Oct. 1957).

3. Sleicher, C. A., Jr., and Tribus, M., "Heat Transfer in a Pipe with Turbulent Flow and Arbitrary Wall Temperature Distribution," Trans. ASME, Vol. 79, 1957.

4. Becker, H. L., "Heat Transfer in Turbulent Tube Flow," Applied Science Research, Section A, Vol. 6, 1957.

5. Sparrow, E. M., Hallman, T. M., and Siegel, R., "Turbulent Heat Transfer in the Thermal Entrance Region of a Pipe with Uniform Heat Flux," Applied Science Research, Vol. 7, 1957.

6. Deissler, R. G., and Elan, C. S., "Analytical and Experimental Investigation of Fully Developed Turbulent Flow of Air in a Smooth Tube with Heat Transfer with Variable Fluid Properties," NACA TN 2629 (1952).

7. Albrecht, P. H., and Churchhill, S. W., "The Thermal Entrance Region in Fully Developed Turbulent Flow," J. Amer. Inst. Chem. Engrs. 268-273 (1960).

8. Goresh, J. W., "Heat Transfer in Cylindrical Pipes with Fully Established Turbulent Flow and Exposed to a Uniform temperature Environment," Journal of Heat Transfer, August 1966.

APPENDIX A

The general solution to Equation 14 is

$$g = A\ F(a,b,c,t) + Bt^{1-c}\ F(a-c+1,b-c+1,2-c,t) \qquad \text{(A-1)}$$

where

$$a+b = \frac{6}{7}$$

$$ab = -\frac{\lambda}{49}$$

and $$c = \frac{6}{7}$$

For the boundary condition given by Equation 8 to be satisfied at $z = o$, B must be zero. Therefore, Equation 15 now reduces to

$$g = A\ F(a,b,c,z^7) = A\ F\left[a,\left(\frac{6}{7} - a\right)\ ,\ \frac{6}{7},\ z^7\right] \qquad \text{(A-2)}$$

But at $z = 1$, g must be finite; hence, the function F at $z = 1$ is

$$F(a,b,c,1) = \frac{\Gamma(c)\Gamma(c-a-b)}{\Gamma(c-a)\Gamma(c-b)}\ ; \qquad \text{(A-3)}$$

and if

$$b = \frac{6}{7} \text{ and } z = 1$$

the function F becomes

$$F(a, \frac{6}{7} - a, \frac{6}{7}, 1) = \frac{\Gamma(\frac{6}{7})\Gamma(\frac{6}{7}-a-\frac{6}{7}+a)}{\Gamma(\frac{6}{7}-a)\Gamma(a)} = \frac{\infty}{\Gamma(\frac{6}{7}-a)\Gamma(a)} \qquad \text{(A-4)}$$

Thus, for the particular values of b and c given above, the series for the function F(a,b,c,1) diverges unless it terminates. This requires that "a" must be zero or a negative integer, which leads to the following admissible values of "a":

$$a = o, -1, -2, ----, -n \qquad \text{(A-5)}$$

yielding the corresponding eigenvalues

$$-\lambda_n = 49 \left(-n\right) \left(\frac{6}{7} + n\right)$$

where n = 0, 1, 2, 3 . . . . (A-6)

The resulting polynomial solutions are included in a more general class known as Jacobi polynomials and are defined by the equation

$$F_n(\alpha;\ \gamma;\ z^7) = F(-n, \frac{6}{7} + n; \frac{6}{7}; z^7). \qquad \text{(A-7)}$$

For the present case

$$\left.\begin{aligned} a &= n, \text{ where } n = 0, 1, 2, 3. \ . \ . \\ \alpha &= \frac{6}{7} \\ \gamma &= \frac{6}{7} \ . \end{aligned}\right\} \qquad \text{(A-8)}$$

Thus, the eigenfunctions of Equation 13 are given by the equation

$$A_n \ F_n\left(\frac{6}{7};\ \frac{6}{7};\ z^7\right) = A_n \ F_n \ \left(-n,\ \frac{6}{7} + n;\ \frac{6}{7};\ z^7\right) \qquad \text{(A-9)}$$

where the A_n are arbitrary constants.

The functions $F_n(z)$ are orthogonal with respect to z^5 as a weight factor:

$$\begin{aligned} &\int_o^1 z^5 \ F_m(z) \ F_n(z) \ dz = o \text{ for } m \neq n \\ &\int_o^1 z^5 \ F_n^2(z) \ dz = C_n^2 \text{ when } m = n \end{aligned} \qquad \text{(A-10)}$$

In terms of the variable $t = z^7$, the orthogonality relation is

$$\int_o^1 t^{\gamma-1} \ (1-t)^{\alpha-\gamma} \ F_m F_n dt = o \text{ for } m = n, \qquad \text{(A-11)}$$

where

$$\gamma = \frac{6}{7}$$

$$\alpha = \frac{6}{7}$$

and

$$\int_0^1 t^{\gamma-1}(1-t)^{\alpha-\gamma} F_n^2 dt$$

$$= \frac{\Gamma(\gamma)\ \Gamma\ (\alpha + 1-\gamma)}{\Gamma(\alpha)} \frac{(\alpha + 1 -\gamma)_n}{(\alpha)_n\ (\gamma)_n} \frac{n!}{2n} \tag{A-12}$$

It is easily verified that for the values α and γ given above, Equation 26 becomes

$$\int_0^1 z^5\ F^2 dz = \frac{(n!)^2}{7\left[\frac{6}{7}_n\right]^2 \left(\frac{6}{7} + 2n\right)} = C_n^2 \tag{A-13}$$

where

$(\alpha)_n = \alpha\ (\alpha + 1)\ (\alpha + 2)...(\alpha + n-1)$ for n 1, 2, 3...

with $(\alpha)_o$ defined as

$$(\alpha)_o = 1.$$

For n = o, 1, 2, 3 and 4 Equation 27 yields

$$C_o = 0.4082$$

$$C_1 = 0.2609$$

$$C_2 = 0.2155$$

$$C_3 = 0.1904$$

$$C_4 = 0.1738 \qquad \text{(A-14)}$$

The first five Jacobi polynomials are easily obtained by expanding the series

$$F_n(\alpha;\ \gamma;\ t) = F(-n,\ \alpha + n;\ \gamma;\ t) = 1$$

$$+ \sum_{k=1}^{n} \binom{n}{k} \frac{(\alpha + n)\ (\alpha + n + 1)\ \ldots\ (\alpha + n + k - 1)}{\gamma(\gamma + 1)\ldots(\gamma + k-1)}\ z^k \qquad \text{(A-15)}$$

for n = 0, 1 + ...4 and $\gamma \neq 0, -1, \ldots -n + 1$.

For n = o

$$F_o(\alpha, \gamma, t) = 1$$

n = 1

$$F_1(\alpha, \gamma, t) = 1 - 2.1667\ z^7$$

n = 2

$$F_2(\alpha, \gamma, t) = 1 - 6.6667\ z^7 + 6.9231\ z^{14} \qquad \text{(A-16)}$$

n = 3

$$F_3(\alpha, \gamma, t) = 1 - 13.5000\ z^7 + 35.3077\ z^{14} - 24.1269\ z^{21}$$

n = 4

$$F_4(\alpha, \gamma, t) = 1 - 22.6691\ z^7 + 107.2429\ z^{14} - 171.5886\ z^{21} + 87.3830\ z^{28}$$

With the C_n and F_n thus obtained, we now proceed to obtain an approximate solution to Equation 7 by applying the Galerkin technique.

For this method, it is convenient to define a set of functions $\Phi_n(z)$ such that

$$\Phi_n(z) = \frac{F_n(z)}{C_n \sqrt{\lambda_n}} \qquad n = 1, 2, \ldots \qquad \text{(A-17)}$$

with the property that

$$\lambda_n \int_o^1 z^5 \, \phi_m(z) \, \phi_n(z) \, dz = \delta_{mn} \tag{A-18}$$

where

$$\delta_{mn} \begin{cases} = 0 \text{ if } m \neq n \\ = 1 \text{ if } m = n \end{cases} \tag{A-19}$$

For n = o we shall define

$$\phi_o = \frac{F_o}{C_o} , \tag{A-20}$$

while the eigenfunctions $\phi_n(z)$ for n = 1, 2, 3 and 4 are computed by substitution of the λ_n, C_n and F_n directly into Equation 31. Listed below are the first five eigenfunctions:

$$\left.\begin{aligned}
\phi_o &= 2.4495 \\
\phi_1 &= 0.4018 - 0.8706 \, z^7 \\
\phi_2 &= 0.2773 - 1.8488 \, z^7 + 1.9199 \, z^{14} \\
\phi_3 &= 0.2206 - 2.9776 \, z^7 + 7.7877 \, z^{14} - 5.3216^{21} \\
\phi_4 &= 0.1866 - 4.2293 \, z^7 + 20.0080 \, z^{14} - 32.0128 \, z^{21} \\
&\quad + 16.3028 \, z^{28}
\end{aligned}\right\} \tag{A-21}$$

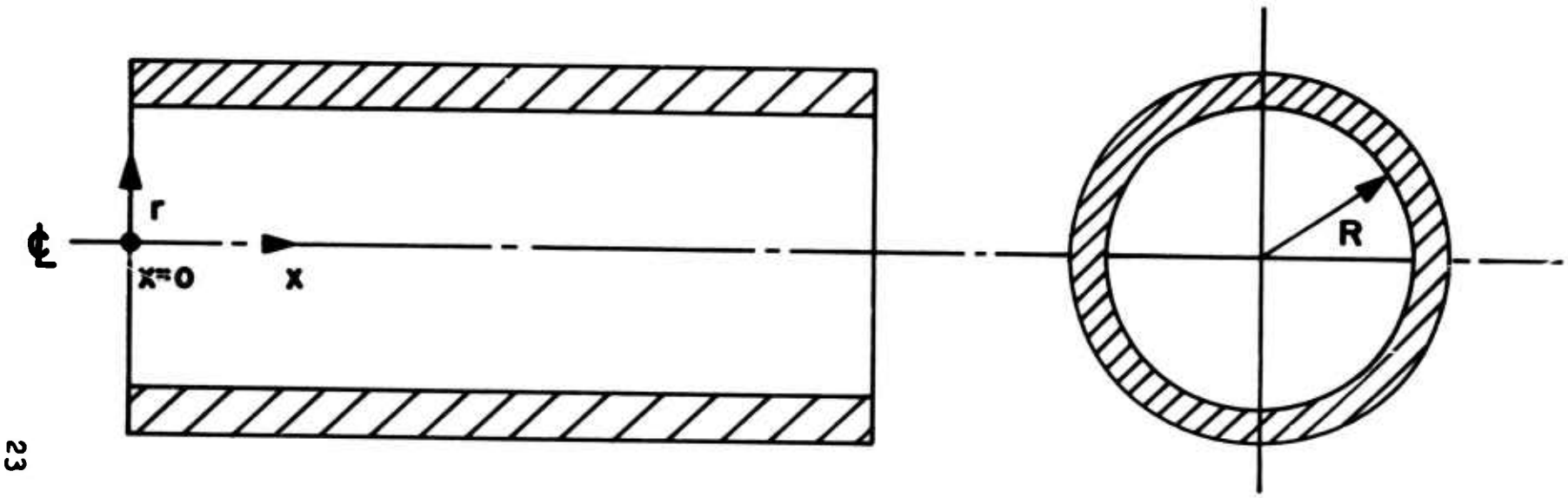

FIG. I SCHEMATIC DIAGRAM SHOWING THE COORDINATES USED

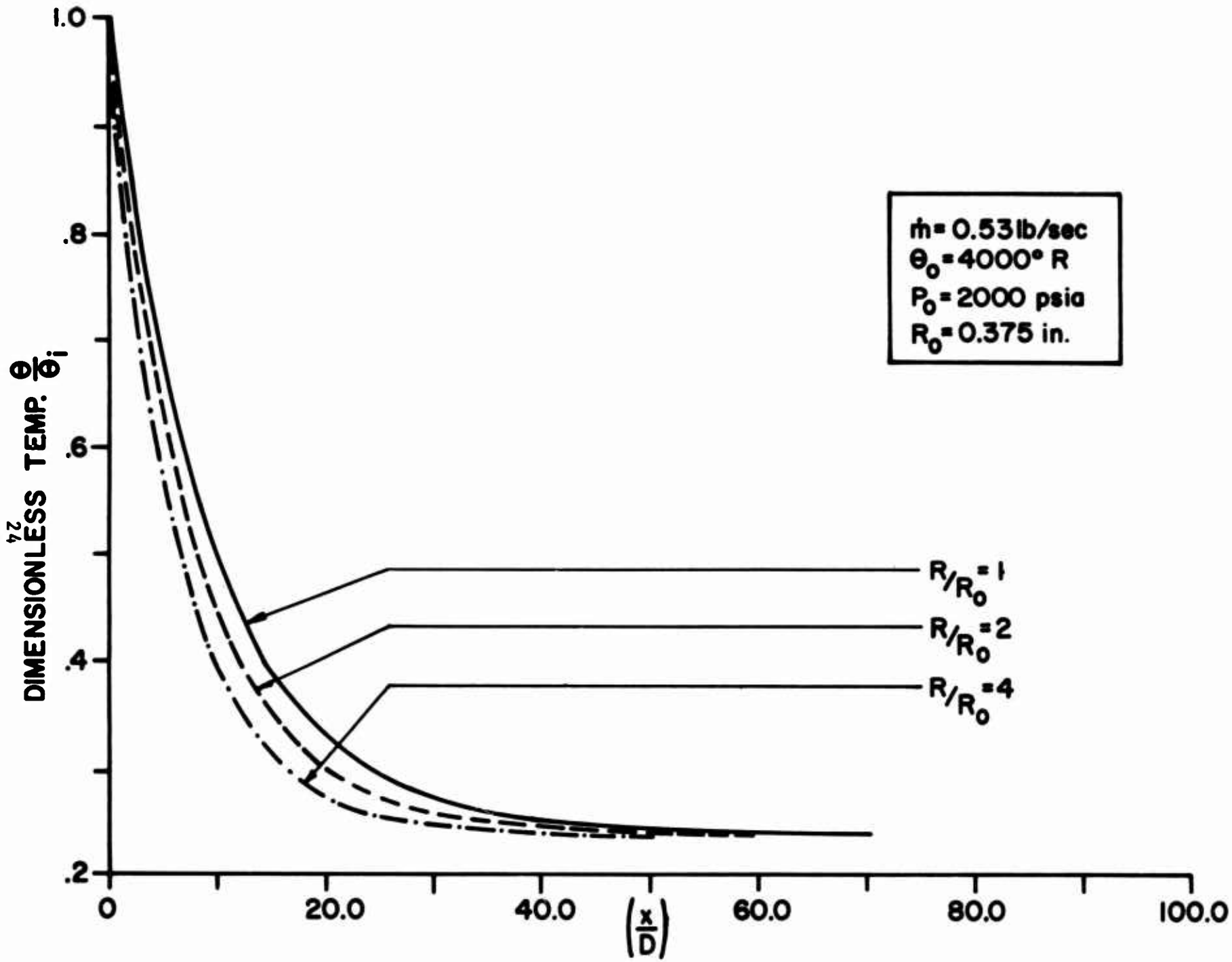

Fig 2 CENTERLINE TEMPERATURE VARIATION WITH NON-DIMENSIONAL AXIAL LENGTH

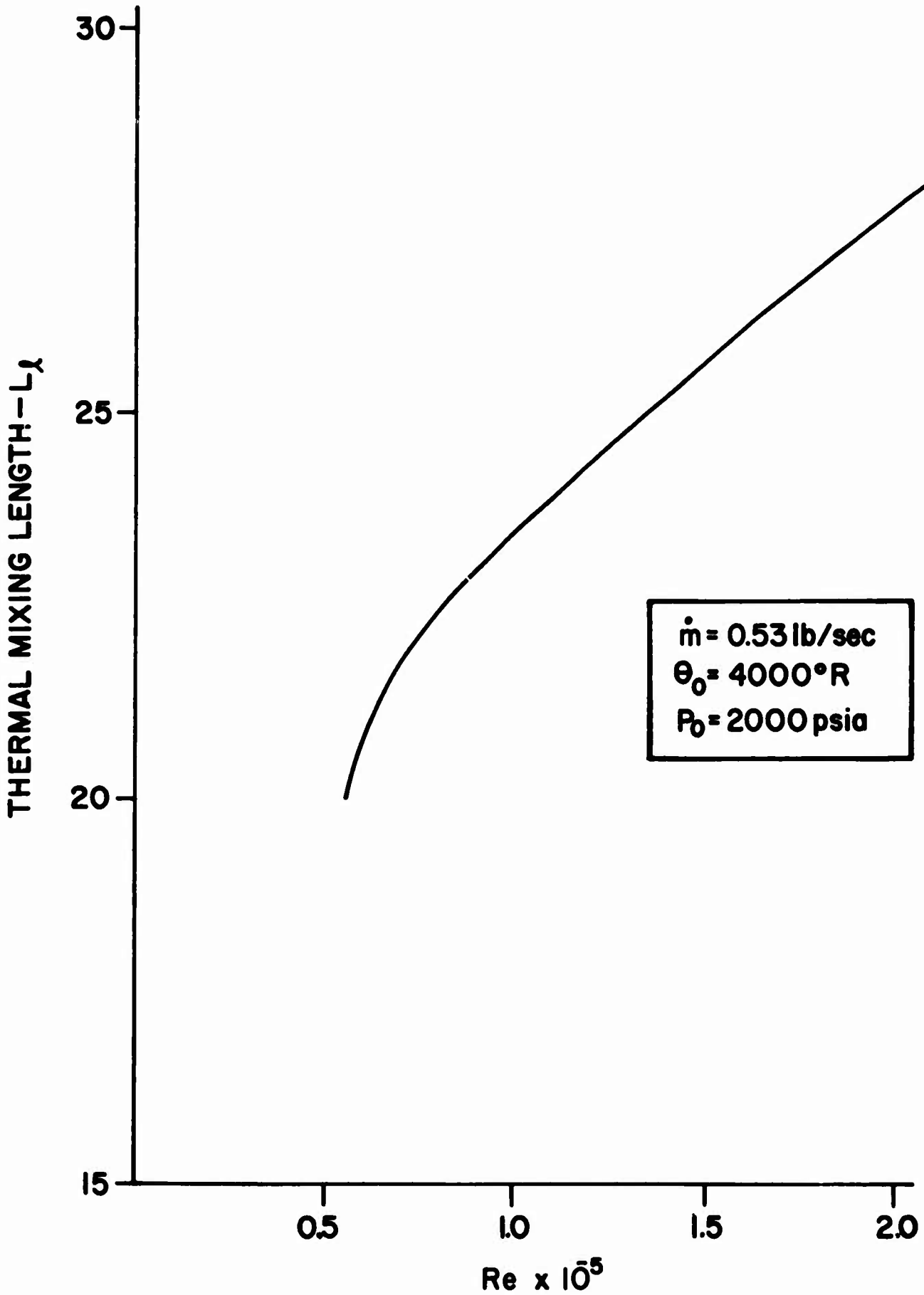

Fig. 3 VARIATION OF MIXING LENGTH WITH INITIAL REYNOLDS NUMBER

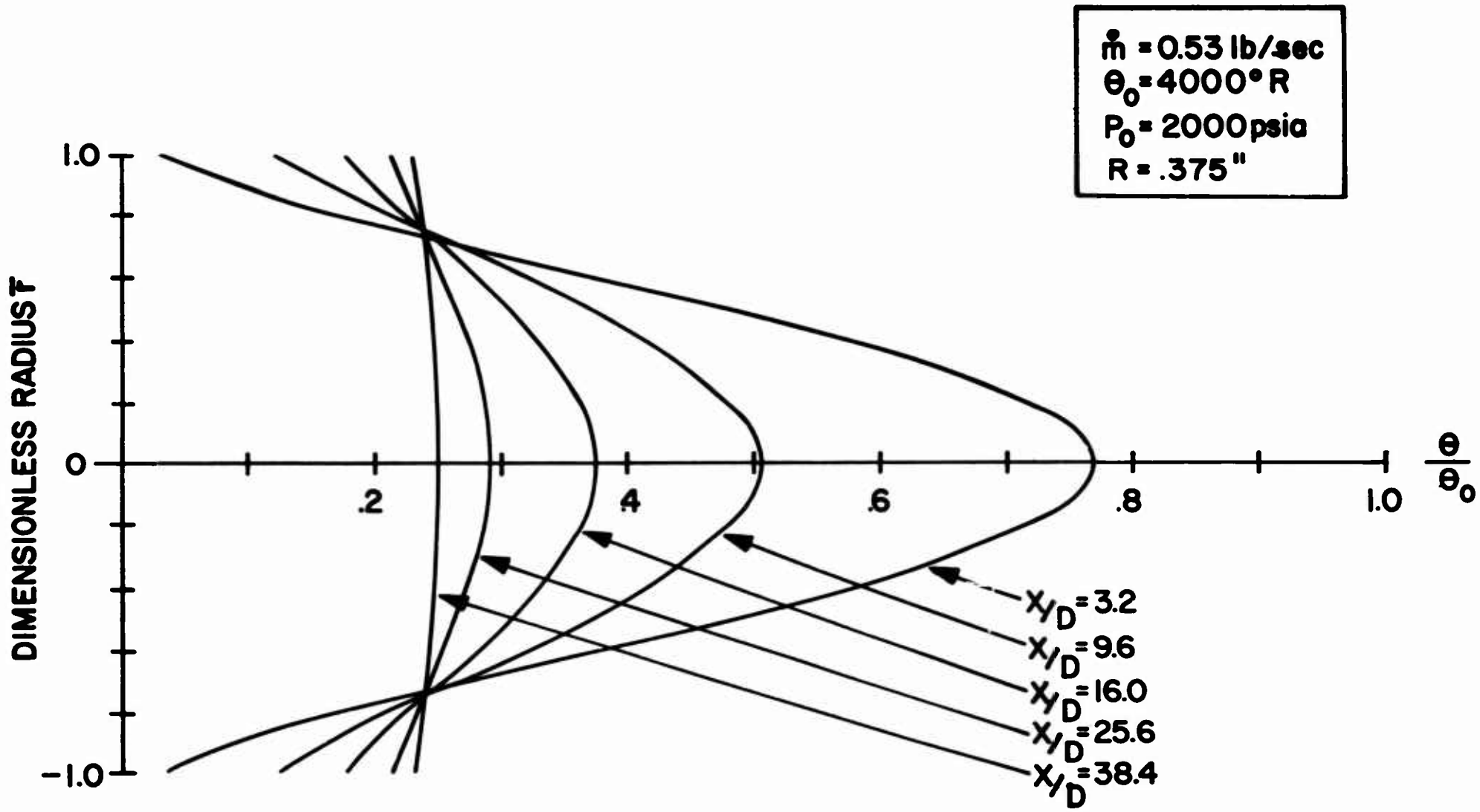

FIG. 4 RADIAL TEMPERATURE PROFILES AT DIFFERENT AXIAL POSITIONS

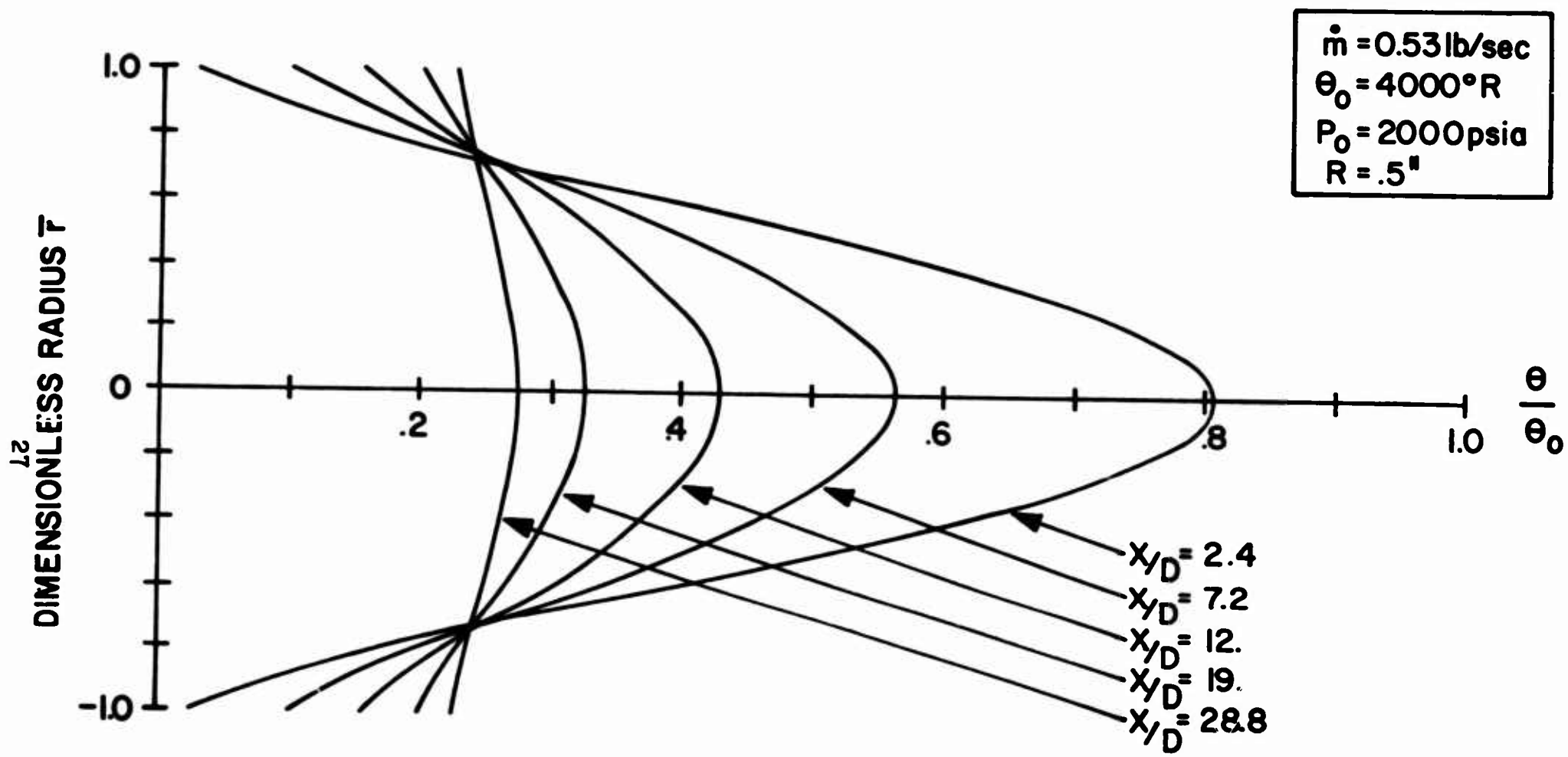

FIG. 5 RADIAL TEMPERATURE PROFILES AT DIFFERENT AXIAL POSITIONS

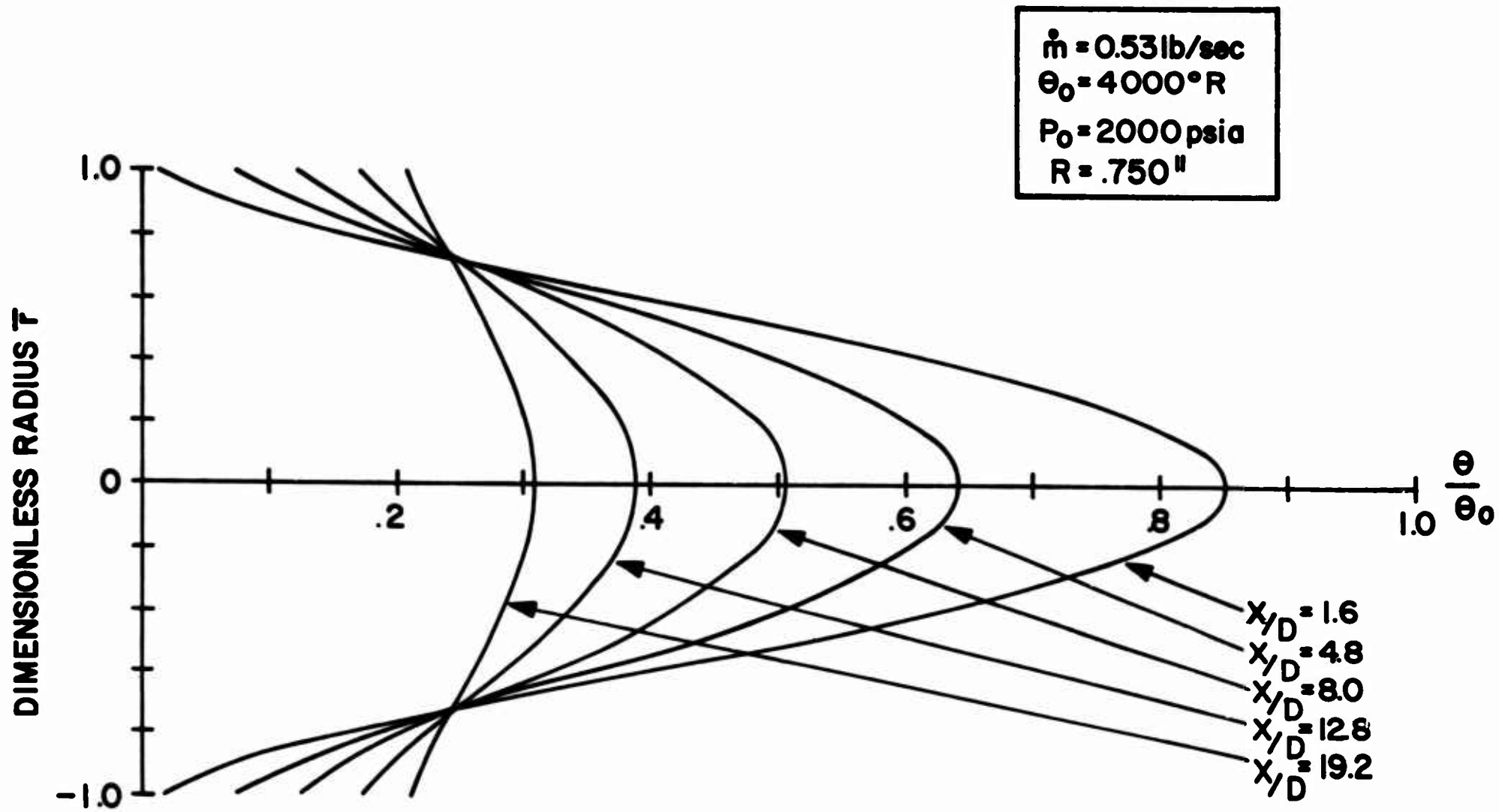

FIG. 6 RADIAL TEMPERATURE PROFILES AT DIFFERENT AXIAL POSITIONS

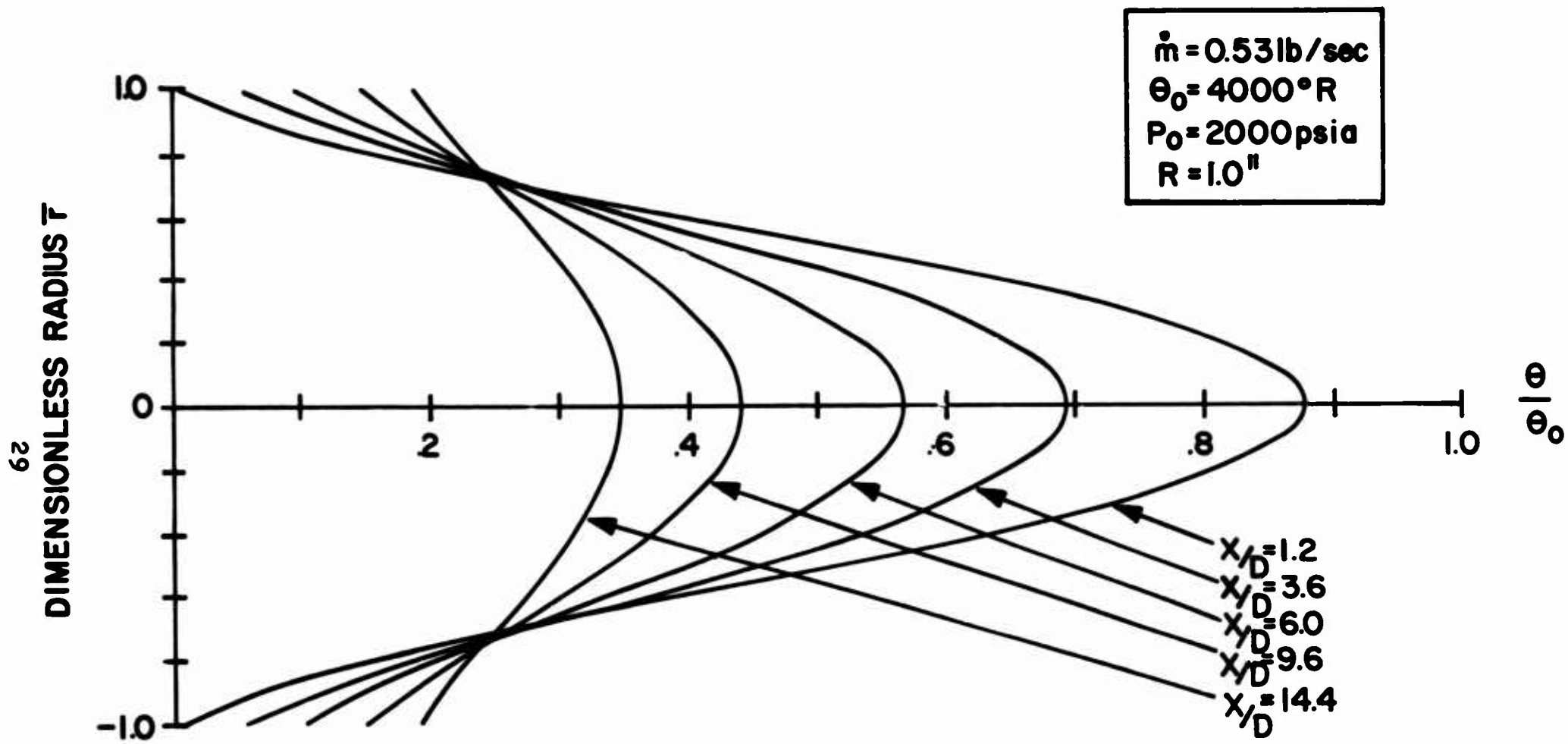

FIG. 7 RADIAL TEMPERATURE PROFILES AT DIFFERENT RADIAL POSITIONS

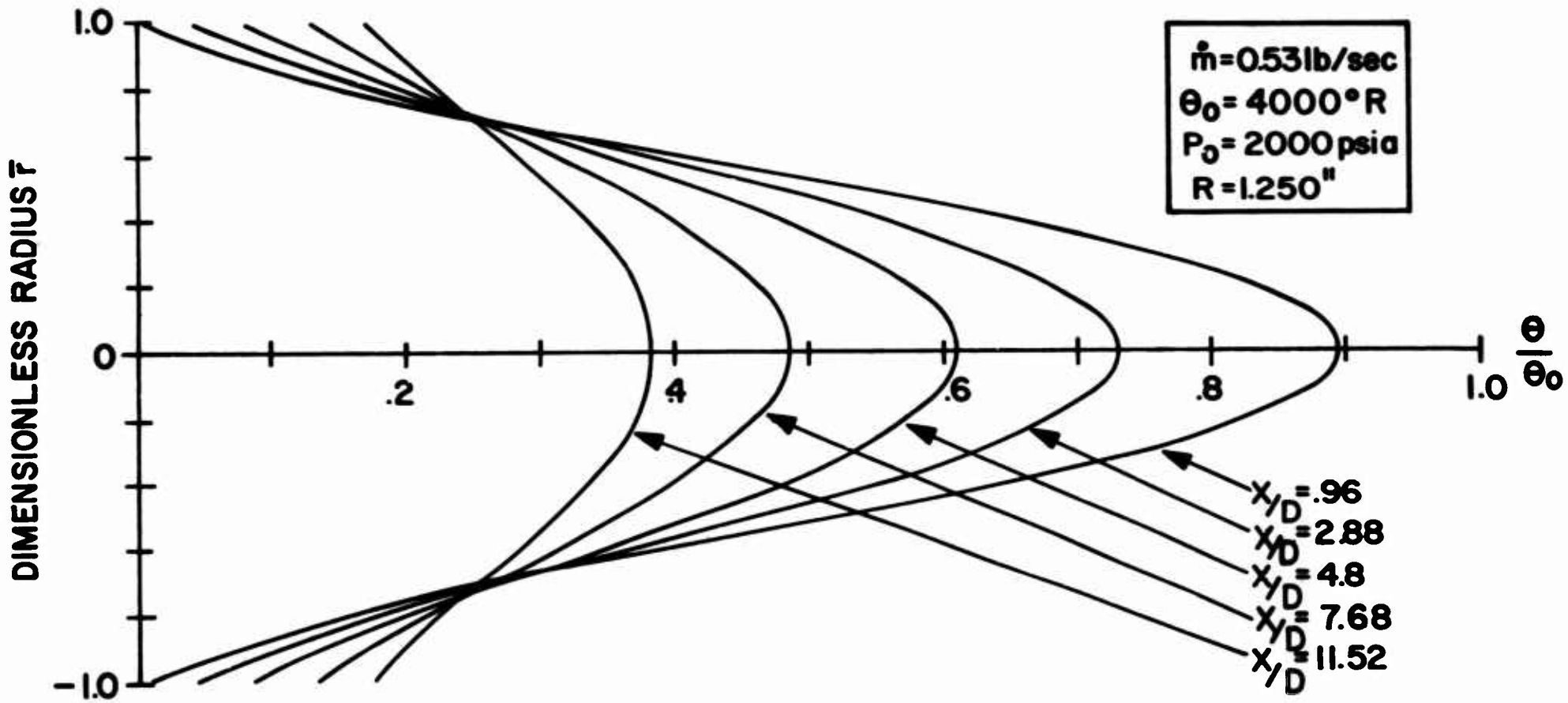

FIG. 8 RADIAL TEMPERATURE PROFILES AT DIFFERENT AXIAL POSITIONS

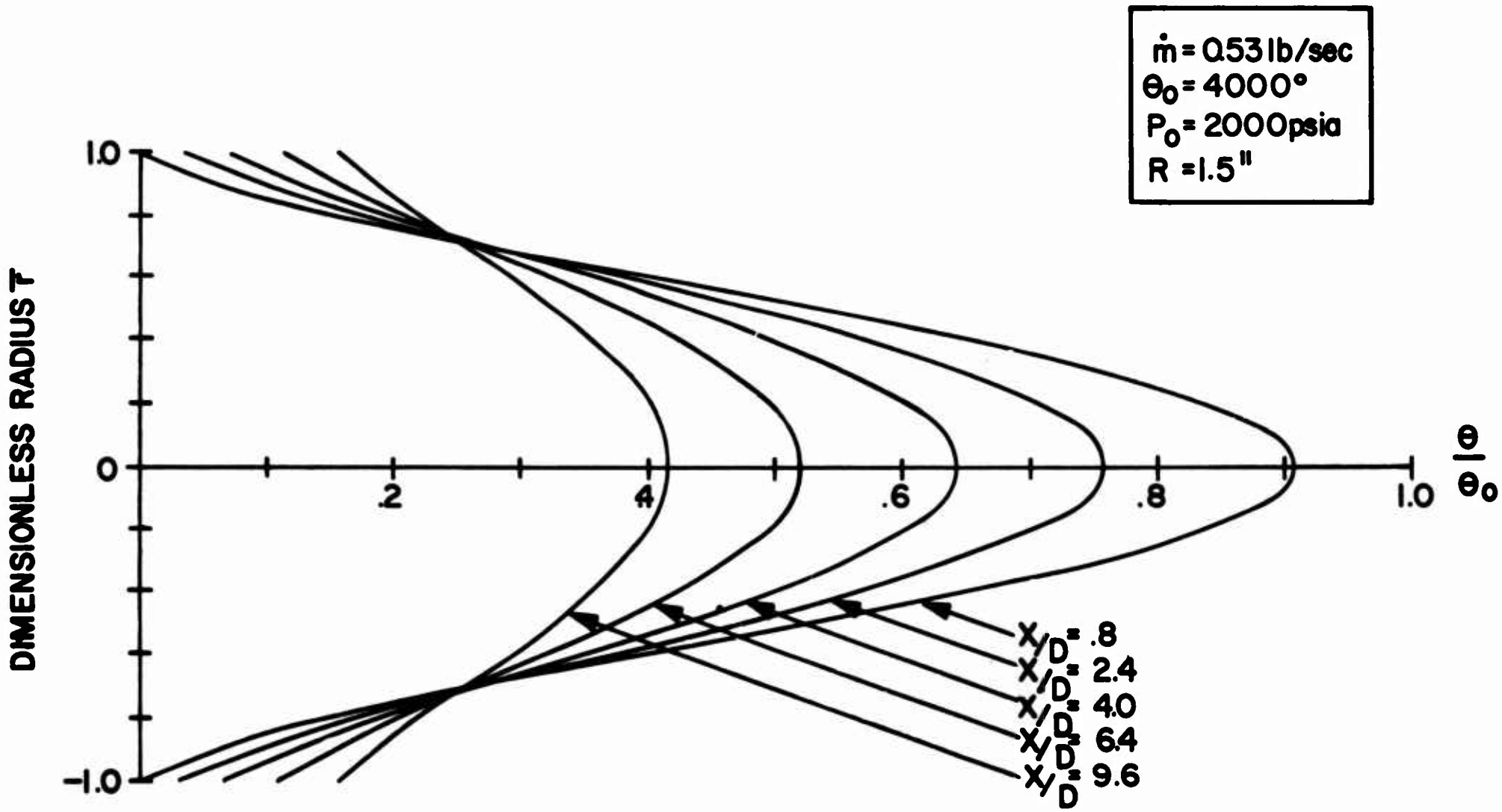

FIG. 9 RADIAL TEMPERATURE PROFILES AT DIFFERENT AXIAL POSITIONS

TABLE I.

VARIATION OF THE EXPONENTIAL DECAY FACTOR WITH REYNOLDS NUMBER

R (inches)	Re x 10^5	β^2_n
0.375	2.24939	1.63577
		5.04350
		10.20157
		20.37003
0.500	1.68704	1.31831
		4.06469
		8.22172
		16.41676
0.625	1.34964	1.11516
		3.43831
		6.95473
		13.88689
0.750	1.12470	0.97263
		2.99888
		6.06589
		12.11209
0.875	0.96403	0.86644
		2.67146
		5.40361
		10.78969
1.000	0.84352	0.78387
		2.41688
		4.88867
		9.76147
1.125	0.74980	0.71760
		2.21254
		4.47534
		8.93615
1.250	0.67482	0.66308
		2.04443
		4.13531
		8.25720

TABLE I. (Continued)

R (inches)	Re x 10^5	β^2_n
1.375	0.613	0.61733
		1.90339
		3.85002
		7.68755
1.500	0.562	0.57833
		1.78315
		3.60680
		7.20189

ERRATA

ARL 66-0178 September 1966

TURBULENT HEAT TRANSFER IN THE THERMAL REGION OF A PERFECTLY INSULATED PIPE

Numbered equations as shown on listed pages should be changed as follows:

Equation No.	Page No.	Change
15	8	$g_n(z)=\sum_{n=0}^{N} B_n \Phi_n(z)$
16	9	$\sum_{n=o}^{N} B_n \left[\frac{d}{dz}(1-z^7)\frac{d\Phi_n}{dz}-\omega_n z^7 \Phi_n\right]=0$
17	9	$\sum_{n=o}^{N} B_n \left[\lambda_n z^5 \Phi_n(z)-\omega_n z^7 \Phi_n(z)\right]=0$
18	9	$\sum_{n=o}^{N} B_n \left[\sigma_{mn}-\omega A_{mn}\right]=0$
20	10	$\left[\sigma_{mn}-\omega_n A_{mn}\right]=0$

AEROSPACE RESEARCH LABORATORIES
OFFICE OF AEROSPACE RESEARCH
UNITED STATES AIR FORCE
WRIGHT-PATTERSON AIR FORCE BASE, OHIO

Unclassified

Security Classification

DOCUMENT CONTROL DATA - R&D

(Security classification of title, body of abstract and indexing annotation must be entered when the overall report is classified)

1. ORIGINATING ACTIVITY *(Corporate author)* Fluid Dynamics Facilities Research Laboratory Aerospace Research Laboratories Wright-Patterson AFB, Ohio	2a. REPORT SECURITY CLASSIFICATION Unclassified 2b. GROUP

3. REPORT TITLE

Turbulent Heat Transfer in the Thermal Entrance Region of a Perfectly Insulated Pipe.

4. DESCRIPTIVE NOTES *(Type of report and inclusive dates)*

Scientific. Final.

5. AUTHOR(S) *(Last name, first name, initial)*

Goresh, John W.
Dunn, Robert G.

6. REPORT DATE September 1966	7a. TOTAL NO. OF PAGES 42	7b. NO. OF REFS 8

8a. [redacted] In-House Research b. PROJECT NO. 7065-00 04 c. 61445014 d. 681307	9a. ORIGINATOR'S REPORT NUMBER(S) 9b. OTHER REPORT NO(S) *(Any other numbers that may be assigned this report)* ARL 66-0178

10. AVAILABILITY/LIMITATION NOTICES

1. Distribution of this document is unlimited.

11. SUPPLEMENTARY NOTES	12. SPONSORING MILITARY ACTIVITY Aerospace Research Laboratories (ARF) Office of Aerospace Research, USAF Wright-Patterson AFB, Ohio

13. ABSTRACT

The problem considered is that of finding the thermal entrance or thermal mixing region of a pipe where the wall heat flux is zero along the length of the pipe. The fluid is assumed to enter the pipe with a non-uniform temperature profile and a fully developed turbulent velocity profile.

The approach is analogous to that introduced by Fettis for the solution of the uniform wall temperature problem.

The results for different radii tubes and Reynolds numbers are presented in graphs which show the adjustment of the temperature profile down the pipe. These results provide information concerning the minimum length mixing tube, since any wall losses will require a greater length.

DD FORM 1 JAN 64 1473

Unclassified

Security Classification

Unclassified

Security Classification

14. KEY WORDS	LINK A ROLE	LINK A WT	LINK B ROLE	LINK B WT	LINK C ROLE	LINK C WT
Turbulence						
Thermal Entrance Region						
Zero Wall Heat Flux						
Heat Transfer in Cylinders						
Minimum Length Mixing Tube						
Fully Developed Hydrodynamic Conditions						
Steady State Conditions						
Non-Uniform Entrance Temperature Profile						

INSTRUCTIONS

1. ORIGINATING ACTIVITY: Enter the name and address of the contractor, subcontractor, grantee, Department of Defense activity or other organization *(corporate author)* issuing the report.

2a. REPORT SECURITY CLASSIFICATION: Enter the overall security classification of the report. Indicate whether "Restricted Data" is included. Marking is to be in accordance with appropriate security regulations.

2b. GROUP: Automatic downgrading is specified in DoD Directive 5200.10 and Armed Forces Industrial Manual. Enter the group number. Also, when applicable, show that optional markings have been used for Group 3 and Group 4 as authorized.

3. REPORT TITLE: Enter the complete report title in all capital letters. Titles in all cases should be unclassified. If a meaningful title cannot be selected without classification, show title classification in all capitals in parenthesis immediately following the title.

4. DESCRIPTIVE NOTES: If appropriate, enter the type of report, e.g., interim, progress, summary, annual, or final. Give the inclusive dates when a specific reporting period is covered.

5. AUTHOR(S): Enter the name(s) of author(s) as shown on or in the report. Enter last name, first name, middle initial. If military, show rank and branch of service. The name of the principal author is an absolute minimum requirement.

6. REPORT DATE: Enter the date of the report as day, month, year; or month, year. If more than one date appears on the report, use date of publication.

7a. TOTAL NUMBER OF PAGES: The total page count should follow normal pagination procedures, i.e., enter the number of pages containing information.

7b. NUMBER OF REFERENCES: Enter the total number of references cited in the report.

8a. CONTRACT OR GRANT NUMBER: If appropriate, enter the applicable number of the contract or grant under which the report was written.

8b, 8c, & 8d. PROJECT NUMBER: Enter the appropriate military department identification, such as project number, subproject number, system numbers, task number, etc.

9a. ORIGINATOR'S REPORT NUMBER(S): Enter the official report number by which the document will be identified and controlled by the originating activity. This number must be unique to this report.

9b. OTHER REPORT NUMBER(S): If the report has been assigned any other report numbers *(either by the originator or by the sponsor)*, also enter this number(s).

10. AVAILABILITY/LIMITATION NOTICES: Enter any limitations on further dissemination of the report, other than those imposed by security classification, using standard statements such as:

(1) "Qualified requesters may obtain copies of this report from DDC."

(2) "Foreign announcement and dissemination of this report by DDC is not authorized."

(3) "U. S. Government agencies may obtain copies of this report directly from DDC. Other qualified DDC users shall request through _____."

(4) "U. S. military agencies may obtain copies of this report directly from DDC. Other qualified users shall request through _____."

(5) "All distribution of this report is controlled. Qualified DDC users shall request through _____."

If the report has been furnished to the Office of Technical Services, Department of Commerce, for sale to the public, indicate this fact and enter the price, if known.

11. SUPPLEMENTARY NOTES: Use for additional explanatory notes.

12. SPONSORING MILITARY ACTIVITY: Enter the name of the departmental project office or laboratory sponsoring *(paying for)* the research and development. Include address.

13. ABSTRACT: Enter an abstract giving a brief and factual summary of the document indicative of the report, even though it may also appear elsewhere in the body of the technical report. If additional space is required, a continuation sheet shall be attached.

It is highly desirable that the abstract of classified reports be unclassified. Each paragraph of the abstract shall end with an indication of the military security classification of the information in the paragraph, represented as *(TS), (S), (C), or (U)*.

There is no limitation on the length of the abstract. However, the suggested length is from 150 to 225 words.

14. KEY WORDS: Key words are technically meaningful terms or short phrases that characterize a report and may be used as index entries for cataloging the report. Key words must be selected so that no security classification is required. Identifiers, such as equipment model designation, trade name, military project code name, geographic location, may be used as key words but will be followed by an indication of technical context. The assignment of links, rules, and weights is optional.

Security Classification