AD648076

TI REPORT NO.
08-67-18

FINAL TECHNICAL SUMMARY REPORT

FOR

TITANIUM CHALCOGENIDE INFRARED TRANSMITTING GLASSES

1 February 1966 through 31 January 1967

Contract N00014-66-C0085

Department of the Navy
Office of Naval Research
Washington, D. C.

in cooperation with

Advanced Research Projects Agency
Department of Defense
Washington, D. C.

ARPA Order No. 269

Project Code No. 6E30K21

February 1967

D D C
RECEIVED
MAR 13 1967
C

Prepared by

A. Ray Hilton
Texas Instruments Incorporated
13500 North Central Expressway
Dallas, Texas 75222

DISTRIBUTION OF THIS DOCUMENT IS UNLIMITED

ARCHIVE COPY

BEST
AVAILABLE COPY

TI REPORT NO.
08-67-18

FINAL TECHNICAL SUMMARY REPORT

FOR

TITANIUM CHALCOGENIDE INFRARED TRANSMITTING GLASSES

1 February 1966 through 31 January 1967

Contract N00014-66-C0085

Department of the Navy
Office of Naval Research
Washington, D. C.

in cooperation with

Advanced Research Projects Agency
Department of Defense
Washington, D. C.

ARPA Order No. 269

Project Code No. 6E30K21

February 1967

Prepared by

A. Ray Hilton
Texas Instruments Incorporated
13500 North Central Expressway
Dallas, Texas 75222

DISTRIBUTION OF THIS DOCUMENT IS UNLIMITED

ABSTRACT

Two experimental approaches were used in attempts to compound non-oxide chalcogenide glasses based on the transition element titanium. The first was an open-chamber method in which the reactants were rapidly heated using a high-temperature dc arc. Heavy losses of volatile constituents during the arcing process prevented this method from producing a homogeneous melt. In the second method the reactants were sealed in a quartz vial which was supported by either a boron nitride or a graphite chamber. Compounding the Ti-V-Te system at 1600 to 1700°C produced a homogeneous melt, but glasses did not form when the melt was quenched. Selenium glasses containing the transition elements nickel, zinc, and manganese were formed but none had physical properties significantly better than selenium glasses evaluated previously. No tellurium-based glasses containing transition elements formed.

TABLE OF CONTENTS

SECTION		PAGE
I	INTRODUCTION	1
II	EXPERIMENTAL APPROACH	2
	A. Use of the Arc Melter	2
	B. Samples Sealed in Quartz Vials	5
III	RESULTS	7
	A. Open System	7
	B. Closed Systems	12
IV	DISCUSSION OF RESULTS	29
V	CONCLUSIONS	30
	REFERENCES	31

LIST OF TABLES

TABLE		PAGE
I	Samples Prepared Using the Arc Melter	8
II	Samples Prepared Using a Closed System	13
III	Summary of Results for Systems Evaluated Using the Closed System Method	28

LIST OF ILLUSTRATIONS

FIGURE		PAGE
1	Arc-Melter Reactor	3
2	Graphite Container	4
3	Closed System Reactor	6
4	Photographs of Typical Samples	21
5	Photographs of Typical Samples	23
6	Photographs of Ni-Ge-Se Glass	25
7	Configuration of Two-Phase Glass Samples	26
8	Photographs of Typical Crystalline Tellurium Samples	27

BLANK PAGE

SECTION I

INTRODUCTION

The use of airborne infrared optical systems has created a need for new infrared optical materials. The most desirable material is an infrared transmitting glass transparent to at least 15 microns with physical properties comparable to those of oxide optical glasses. Glasses based on the chalcogen element oxygen are not transparent past about 5 microns, but glasses based on the heavier chalcogen elements sulfur (S), selenium (Se), and tellurium (Te) show good long-wavelength infrared transmission. Several programs have been carried out in search of a non-oxide chalcogenide glass with suitable physical and optical properties. A research program at Texas Instruments under contract Nonr 3810(00) concentrated on chalcogenide glasses containing IVA and VA elements. Several glasses useful for normal low-temperature application resulted from this program, but none had entirely satisfactory physical properties. The results given in the final report for the previous program[1] and reiterated in the proposal[2] leading to the present contract indicate that the physical properties of non-oxide chalcogenide glasses might be substantially improved if the glass composition were based on elements other than those from the IVA or VA groups. Elements which have lower electronegativities and which form stronger chemical bonds are required. Elements which can form multibonds (valences of +3 or +4) and which form more than one stoichiometric chalcogenide compound are needed. Titanium (Ti) and zirconium (Zr) from the group IVB elements and vanadium (V) from the group VB elements were selected as promising possibilities.

The chalcogenides of Ti, Zr, and V are high-melting compounds (> 1200°C). For best results, compounding should take place at a temperature greater than the melting point of the highest-melting stoichiometric compound in the melt. A high temperature insures a low-viscosity melt and thus a homogeneous mixture. Since the simple methods used in the previous program[1] are not suitable for compounding at temperatures much above 1000°C, the present program required a new approach. Compounding must be carried out at 1300°C to 1600°C, a temperature range above the failure point of unsupported quartz under pressure.

SECTION II

EXPERIMENTAL APPROACH

Basically, either an open or a closed system can be used for high-temperature compounding of materials that contain volatile constituents. Both methods have been used in this program. In the open system the reactants are melted in an open chamber so rapidly that a homogeneous melt is obtained before an appreciable portion of the volatile constituent is evolved. The open method is simple and, of course, rapid. In the closed system the reactants are sealed in a closed vial and slowly raised to the compounding temperature. With this system the beginning composition is maintained, but the method is slow and it is difficult to find materials that can be used at such high temperatures.

A. Use of the Arc Melter

A schematic drawing of the arc melter used in this program (manufactured by the N. R. C. Equipment Corporation) is shown in Figure 1. A tungsten (W) tipped electrode powered by a dc welder power supply is placed in a chamber which has a water-cooled copper plate at the bottom and a glass viewing port on the side. The chamber can be evacuated and flushed with argon (Ar). Before a sample is melted, residual oxygen is removed from the one-half atmosphere of argon left in the chamber by arc melting a pellet of titanium (Ti) metal. Oxygen is gettered by the molten Ti in the form of TiO_2. The arc rod, viewed through the port, can be manipulated about the samples on the copper plate. The power available to the arc and the length of time a sample is arced can be varied in an effort to produce a homogeneous melt. The tip of the arc is considered to produce a 3000°C temperature. Powders are often heated indirectly to avoid scattering the reactants with the arc. A certain amount of trial and error is necessary to produce melts of good quality.

Another approach used with the arc melter was to place the reactants in a graphite container and arc to the container. As the container becomes very hot, the sample inside is heated to a molten state and yet is contained within the chamber. Figure 2 is a schematic of this arrangement. Arcing to graphite caps

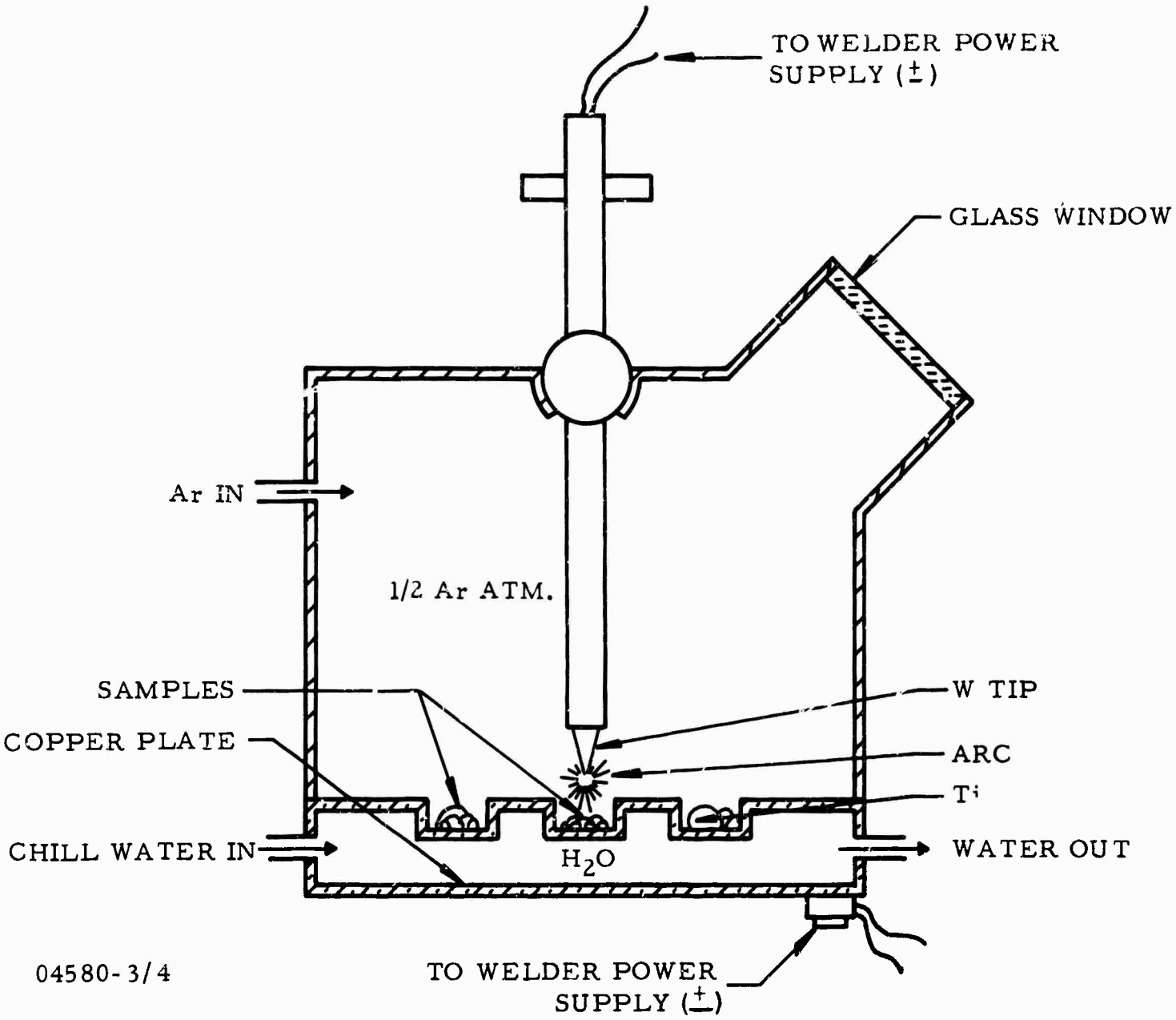

Figure 1 Arc-Melter Reactor

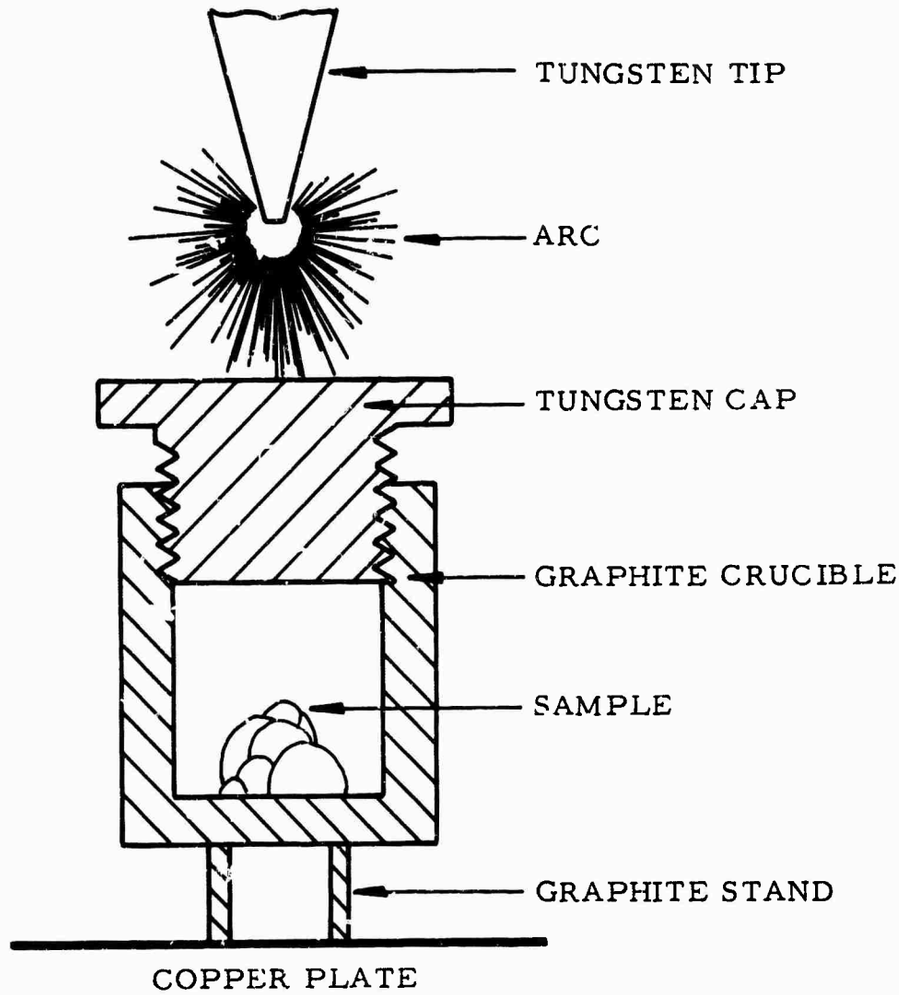

04580-1/4

Figure 2 Graphite Container

on the containers destroyed the caps and caused sample failure, so the graphite caps were replaced with tungsten plugs screwed into the graphite container. High temperatures were difficult to obtain because of the high thermal conductivity of the graphite. For this reason, the chamber was placed on thin graphite stands, as shown in Figure 2, to decrease the rate of heat transfer to the copper plate.

B. Samples Sealed in Quartz Vials

The closed system used quartz vials supported by boron nitride (BN) or graphite chambers. A schematic drawing of the furnace arrangement and quenching chamber is shown in Figure 3. A high-temperature SiC heating element is mounted vertically in an alumina liner which is insulated with quartz wool. The small sample, sealed in a quartz vial, is placed inside the support chamber and suspended by a BN rod - steel rod combination in the heat zone of the furnace. The thermocouple of the temperature controller is placed close to the sample in a small depression in the bottom of the support chamber. After the compounding operation, the support chamber containing the sample is moved into the quench chamber by drawing the steel rod through the top of the quench chamber. The valve between the quench chamber and the vacuum pump, and the full opening flap valve between the two chambers are closed to protect the hot furnace from the shock of a sudden rush of air. Air is then allowed to rush into the upper chamber and quench the sample. The entire quench operation takes only a few seconds. Measured quench rates were of the order 5 to 10°C/second. Chilled water is circulated through copper tubing soldered to the walls and flanges of the chambers to remove conducted heat.

Late in the program, the failure rate of the heating elements became excessive because (1) the graphite vial support caused electrical shorting across the element; and (2) when the quartz vials failed, the heating elements failed because they were exposed to the chalcogen vapors. To correct these two causes of element failure, an alumina inner liner was added to the heating element. This addition reduced the failure rate but limited the maximum temperature that could be obtained with the elements.

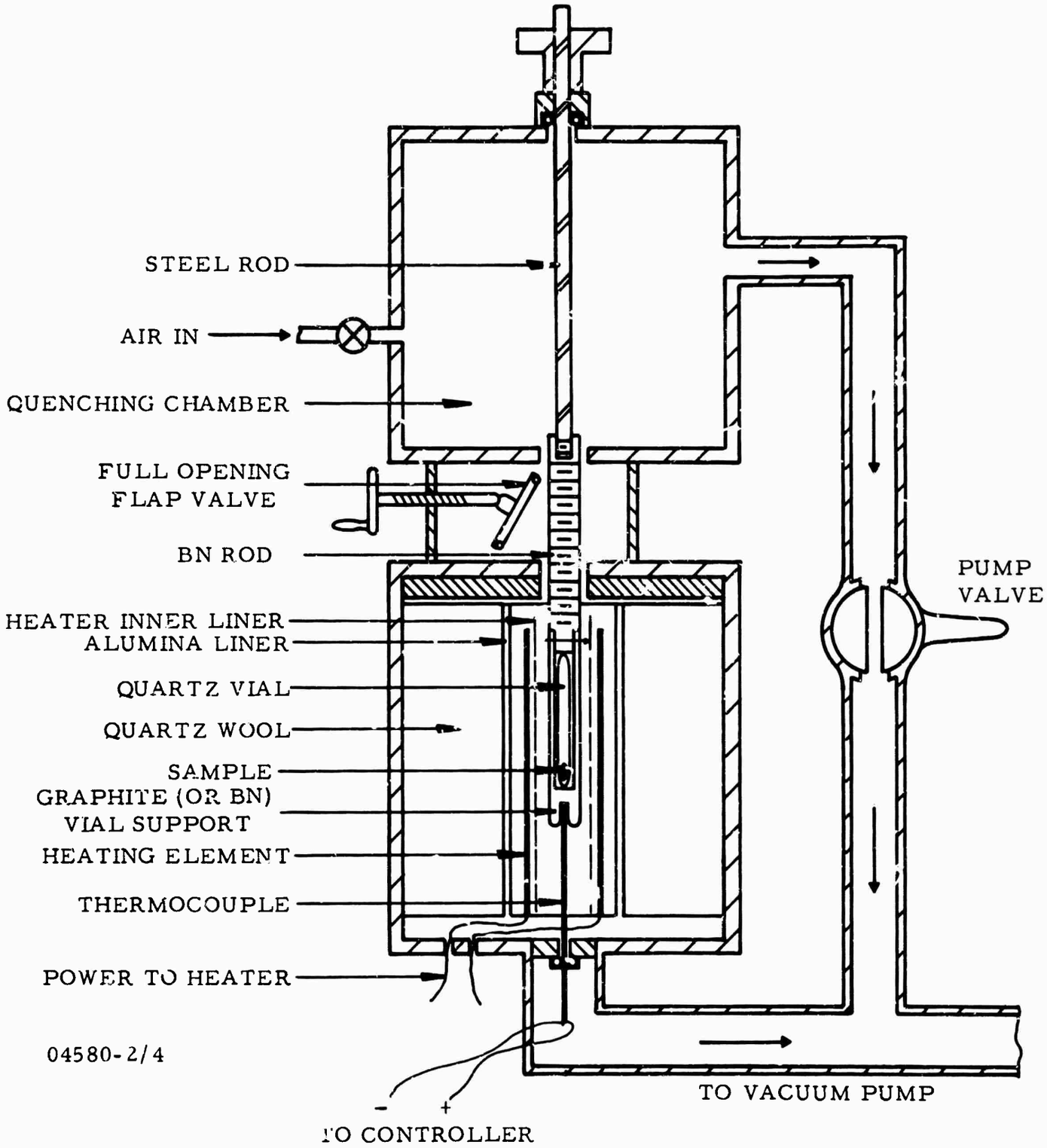

Figure 3 Closed System Reactor

SECTION III

RESULTS

A. Open System

Table I summarizes sixty-six attempts to use the arc melter to form glassy materials. First efforts concentrated on using the arc to directly melt the reactants placed on the copper plate in the form of powders. The arc scattered the reactants badly. Various arcing techniques were tried, but in every case the reactants were left as a porous mass. No better results were obtained by using reactant mixtures prepared with compounds, rather than from the elements, or by pressing reactants into pellets using organic binders. Next, graphite containers were used to confine the powders during the heating period. The arc was too violent for the graphite container, however, and the graphite caps had to be replaced by tungsten caps. Only partial melting of the samples occurred because the containers, with their large mass and high thermal conductivity, were not reaching sufficiently high temperatures. The graphite chambers were placed on small graphite support rods to decrease the mass of the graphite in contact with the copper plate, and thus to decrease the thermal loss. Complete melting of samples was obtained using this technique and long periods of arcing, but the compositions changed considerably because excessive amounts of Te were lost during the heating process. Attempts to reduce the Te loss by plugging the graphite-tungsten threads with Sauereisen cement failed. Similar results were obtained with Ti-Si-Se, Ti-Ge-Se, Ti-Ge-Te, Ti-Te-Se, and Ti-Se-S compositions as reactants.

Formation of $TiSi_2$ and $TiGe_2$ from the elements using the arc was an easy operation. It was not difficult to melt $TiTe_2$ or $TiSe_2$ using the arc, but some Te or Se was lost. However, when molten $TiTe_2$ (or $TiSe_2$) was brought in contact with Si, Ge, molten $TiSi_2$, or molten $TiGe_2$, violent evolution of Te (or Se) occurred. The extreme stability of the Ti-Si and Te-Ge bonds is thought to be a factor in the excessive loss of Te (or Se). For this reason, emphasis was shifted to the Ti-V-Te system. According to the available literature, the Ti-V compounds formed

TABLE I

Samples Prepared Using the Arc Melter (Open System)

Sample No.	Composition	Method Used	Remarks
1	$Ti_{15}Si_{25}Te_{60}$	from pure elements	nonhomogeneous porous mass
2	same as 1	changed arc technique	same as above
3	same as 1	changed arc technique	same as above
4	same as 1	changed arc technique	same as above
5	$Ti_{15}Si_{20}Te_{65}$	from pure elements, carbon container	same as above
6	same as 5	except used $TiTe_2$, Si_2Te_3 and Te	same as above
7	same as 5	except used higher power	same as above
8	$Ti_{25}Si_{20}Te_{55}$	used $TiTe_2$, Si_2Te_3, Si, carbon container	same as above
9	same as 8	lower power	same as above
10	$Ti_{25}Si_{20}Te_{55}$	used $TiTe_2$, Si_2Te_3, Si, in steel container	same as above
11	same as 8	lower power	same as above
12	same as 9	Same as 9	same as above
13	$Ti_{25}Si_{20}Te_{55}$	used $TiTe_2$, Si_2Te_3, Si, no container	same as above
14	same as 13	different arcing technique	same as above
15	same as 13	except fused starting materials used	materials scattered throughout chamber
16	same as 13	except organic binder used with starting materials	nonconductive, did not melt
17	same as 16	except less organic binder used	nonconductive, did not melt
18	$Ti_{25}Si_{20}Te_{55}$	$TiTe_2$, Si_2Te_3, Si, in carbon container with tungsten cap	tungsten cap melted, only top of sample melted
19	same as 18	except container inverted and arced to carbon	materials were hotter but did not melt
20	same as 18	except container placed on carbon support rod	top portion of sample melted
21	same as 20	except higher temperature	same as above

TABLE I
(continued)

Sample No.	Composition	Method Used	Remarks
22	same as 18	except heated longer	loss of material on melting of sample
24	$TiTe_2$	carbon container, tungsten plug, arced 2 minutes	sample did not melt
25	same as 24	except arced 4 minutes	only top melted
26	same as 25	except arced 8 minutes	sample melted
27	same as 24	except container placed on graphite stand, arced 2 minutes	sample did not melt
28	same as 25	except container placed on stand, arced 4 minutes	sample melted, loss of Te excessive
29	$Ti_{18}Si_{44}Te_{38}$	$TiTe_2$ and Si placed in carbon container, tungsten cap, arced for 7 minutes upside down on graphite stand	sample melted, excessive loss of Te
30	$Ti_{30}Si_5Te_{65}$	$TiTe_2$, Si, in carbon container with tungsten cap, arced 2 minutes	material failed to melt
31	$Ti_{30}Si_5Te_{65}$	same as 30 except arced 3 minutes	failed to melt
32	$Ti_{25}Si_{20}Te_{55}$	same as 30 except arced 4 minutes	failed to melt
33	$Ti_{25}Si_{20}Te_{55}$	same as 30 except arced 8 minutes	sample melted, excessive loss of Te
34	$TiTe_2$	carbon container with tungsten plug, heated for 7 minutes	surface of sample melted, 13% by weight of sample lost
35	same as 34	except heated for 8 minutes	75% by weight of sample lost from melt
36	same as 34	same as 34	50% by weight lost from melt
37	$Ti\text{-}Si_2$	open chamber	formed a hard, very strong metallic material
38	$Ti_xSi_{2x}Te_y$	Te was added to metallic sample from no. 37, and mixture heated in open	when $TiSi_2$ melted, violent evolution of Te occurred
39	$Ti_{38.5}Si_{46.2}Te_{15.3}$	equal weights of $TiTe_2$ and $TiSi_2$ arced in open chamber	a weight loss of 54% occurred

TABLE I
(continued)

Sample No.	Composition	Method Used	Remarks
40	$Ti_{15}Te_{85}$	arced in open chamber, used $TiTe_2$ and Te	sample melted but Te evolved from sample
41	$TiTe_2$	in open chamber	sample melted, heavy loss of Te, compound TiTe remained
42	$TiSe_2$	in open chamber	sample melted, 13% by weight loss
43	$Ti_{30}Se_{35}Te_{35}$	in open chamber, $TiTe_2$ and and $TiSe_2$	sample melted, weight loss of 35%
44	$Ti_{30}Si_{20}Se_{20}Te_{30}$	open chamber, used $SiTe_4$ and Ti_3Se_2Te from no. 43	materials reacted violently, left small amount of crystalline material
45	$TiGe_2$	used elemental Ti and Ge	melted and formed strong, high melting metallic material
46	$Ti_{20}Ge_{45}Te_{35}$	used $TiGe_2$ with elemental Te	violent reaction occurs when $TiGe_2$ reacts with Te
47	$TiGe_2$	same as 45	same as 45
48	$Ge_{15}Te_{85}$	elemental Ge and Te	loss of Te was slight
49	$Ge_{15}Te_{85}$	same as 48	same as 48
50	$Ge_{10}Te_{90}$	same as 48	same as 48
51	$Ti_{30}Ge_{10}Te_{60}$	open chamber, $TiTe_2$ and Ge	violent reaction, evolution of Te
52	$Ti_{25}Ge_{20}Te_{55}$	open chamber using Te,Ti,Ge	failed to melt
53	$Ti_{30}Ge_{30}Te_{40}$	open chamber, $GeTe_4$ with Ti	volatile reaction, heavy evolution of Te
54	$Ti_{40}Ge_{25}Te_{60}$	open chamber, using $TiGe_2$ with Te	materials melted and mixed well, only light evolution of Te, resultant material was crystalline
55	$Ti_{35}Ge_{40}Te_{25}$	open chamber, with $TiGe_2$ and $TiTe_2$	great loss of Te, glassy portions found on one side of resultant material

TABLE I
(continued)

Sample No.	Composition	Method Used	Remarks
56	$Ti_{20}Ge_{60}Te_{20}$	open chamber with $TiGe_2$ and $GeTe_4$	melted well, great loss of Te, crystalline mass
57	$Ti_{25}Ge_{50}Se_{25}$	open chamber, used $TiGe_2$ and Se	volatile reaction, heavy evolution of Se
58	$Ti_{20}Ge_{55}Se_{25}$	open chamber, used $TiGe_2$ and $TiSe_2$	melted materials in separate pools, reacted violently when mixed
59	$Ti_{30}Ge_{15}Se_{55}$	open chamber, used $TiSe_2$ and Ge	when two molten materials touched, violent reaction
60	$TiSe_2S$	open chamber used $TiSe_2$ and S	powder scattered throughout chamber, no melt formed
61	$Ti_{15}Si_{15}Te_{70}$	carbon container, tungsten plug, sealed with Sauereisen cement, used $TiTe_2$, Si_2Te_3, and Te, container placed on carbon supports, arced 3 minutes	ceramic cement failed to seal container, 66% by weight of sample lost, porous mass resulted
62	same as 61	using Sauereisen cement with better seal	only 44% of material lost, still porous mass
63	$Ti_{17}V_{66}Te_{17}$	open chamber, using V_2Te_3 and $TiTe_2$	lost 30% by weight when heated, molten materials failed to mix
64	$Ti_{20}V_{15}Te_{65}$	open chamber, used $TiTe_2$, V, and Te	42% by weight loss from sample, porous mass
65	$Ti_{14}V_{14}Te_{72}$	open chamber, added Te porous mass of no. 64	most of excess lost while arcing
66	$Ti_{15}V_{15}Te_{70}$	open chamber used $TiVTe_2$ with Te	only the Te melted
67	$Ge_{28}Sb_{12}Se_{60}$	open chamber, from the elements Ge, Sb and Se; to see if a known glass could be made using this method	43% by weight loss of Se occurred, crystalline, very porous

are not nearly as high-melting as the $TiSi_2$ or $TiGe_2$. However, the results obtained with the Ti-V-Te system were similar to those of the other system. No attempts were made to formulate materials based on Zr instead of Ti. Careful study revealed that the chemistry of these two elements was extremely similar, so it was unlikely there would be an appreciable increase in glass-forming probability using Zr. The final decision to abandon the open system arc melter method came after samples made from compositions known to form good glasses formed crystalline porous masses instead.

B. Closed Systems

Table II summarizes attempts to produce glasses using the closed system. The first sample was a Ti-Si-Te composition sealed in a quartz tube and heated using an rf generator. The energy was coupled into the chamber using a graphite susceptor. The tube was unsupported and failed at 1400°C. Only partial melting occurred. The method was abandoned because it was difficult to support the tube and at the same time couple rf into the sample chamber.

All compositions listed in Table II were small samples sealed in quartz vials supported by either BN or graphite chambers. The need to compound at very high temperatures became apparent gradually. As compounding temperatures were increased, experimental difficulties multiplied. The major sources of trouble were thermocouple failure, vial and support chamber failure, and failure of the heating element caused by electrical arcing or exposure to chalcogen vapors.

The need to compound at high temperatures is illustrated in Figure 4. Figure 4(a) is a photograph of a sample (no. 85) obtained by compounding at 1300°C. Note that the materials have only begun to melt, and at least three layers are apparent. Figure 4(b) is a photograph of sample no. 88, which was compounded at 10°C. The bottom portion of the material has started to melt, and long fibrous crystals have formed. Figure 4(b) also shows a Te-rich mass which formed on the top of the ball. Sample no. 89, in Figure 4(c), shows real evidence of a homogeneous melt. The compounding temperature (1600°C)

TABLE II

Samples Prepared Using a Closed System

(Sealed in Quartz Vial)

Sample No.	Composition	Method Used	Remarks
23	$Ti_{25}Si_{20}Te_{55}$	heated with rf coil using graphite susceptor, sample made using $TiTe_2$, Si_2Te_3, Te	partial melting of sample, porous mass, quartz tube failed
68	$Ti_{15}V_{15}Te_{70}$	using the elements Ti, V, and Te; in BN container at 1420°C 1 hour, slowly cooled	some melting, some glassy regions, mostly crystalline
69	$Ti_{15}V_{15}Te_{70}$	planned the same as 68 but thermocouple failed at 1320°C	crystalline, partial melting
70	$Ti_{25}V_{25}Te_{50}$	same as no. 68, only 2 hours at 1420°C, cooled in furnace with air	essentially the same as 68
71	$Ti_{15}V_{15}Te_{70}$	same as 70	nonhomogeneous, crystalline, small glassy regions
72	$Ti_{20}V_{10}Te_{70}$	same as 70	crystalline, nonhomogeneous, glassy regions
73	$Ti_{10}V_{20}Te_{70}$	same as 70	crystalline, nonhomogeneous, quartz tube failed
74	$Ti_{10}V_{20}Te_{70}$	same as 70 except slow cooled	crystalline, nonhomogeneous
75	$Ti_{15}V_{15}Te_{70}$	using elements placed in BN chamber, rapid quench in air, 1350°C for 1 hour	nonhomogeneous, crystalline, immiscible layers formed
76	$Ti_{20}V_{10}Te_{70}$	repeat of no. 72, using rapid quench technique	nonhomogeneous, crystalline, layers formed
77	$Ti_{10}V_{20}Te_{70}$	repeat of no. 73 using rapid quench technique	nonhomogeneous, crystalline
78	$Ti_{10}V_{10}Te_{80}$	from the elements, BN container, heated to 1350°C for one hour	nonhomogeneous, crystalline, better though than 75-77

TABLE II
(continued)

Sample No.	Composition	Method Used	Remarks
79	$Ti_{10}V_{10}Te_{80}$	repeat of no. 78 only for longer period at 1350°C	quartz vial failed
80	$Ti_{10}V_{10}Te_{80}$	repeat of no. 78 only at 1400°C for 1 hour	highly crystalline, some glassy portions
81	$Ti_{15}Si_{15}Te_{70}$	from the elements, at 1300°C for 1 hour; to check arc melter results	nonhomogeneous crystalline material, some free Te present
82	$Ti_{10}Si_{10}Te_{80}$	from the elements at 1350°C for 1 hour	nonhomogeneous, crystalline, porous, amorphous Te present
83	$Ti_{10}V_{10}Te_{80}$	from the elements, BN container, 1 hour at 1500°C	nonhomogeneous, crystalline, porous material, glassy Te portions present
84	$Ti_{15}V_{15}Te_{70}$	from the elements, BN container, 1300°C ~ 6 hours	nonhomogeneous, crystalline, porous mass, some Te-rich areas
85	$Ti_{15}V_{15}Te_{70}$	from the elements, graphite container, 1300°C for 15 hours	essentially the same as no. 84
86	$Ti_{15}V_{15}Te_{70}$	repeat of 85 except at 1400°C	thermocouple failed
87	repeat of 85	only at 1400°C for 1 hour	essentially the same as 85
88	repeat of 85	only at 1500°C, thermo-couple failed after 1/2 hour	marked improvement over 85, still crystalline
89	repeat of 85	only at 1600°C, thermocouple failed in 10 minutes	for first time sample appeared to melt
90	repeat of 85	only at 1600°C	again thermocouple failed, quartz vial failed
91	$Ti_{15}V_{15}Te_{70}$	carbon container, from the elements, 1600°C, 1 hour	quartz vial failed
92	$Ti_{15}V_{15}Te_{70}$	carbon container, from the elements, 1600°C, 1 hour	quench was slow, partial melting was obtained; bottom of sample was a hard, dense, crystalline solid; top was porous

TABLE II
(continued)

Sample No.	Composition	Method Used	Remarks
93	$Ti_{15}V_{15}Te_{70}$	same as 92	better quench but results were the same as 92
94	$Ti_{15}V_{15}Te_{70}$	same as 92, but a planned temperature of 1700°C	only 1560°C attained because of heating element failure; sample was essentially the same as 92
95	$Ti_{15}V_{15}Te_{70}$	same as 92 but 1700°C for 1 hour	temperature was reached for only 15 minutes before excessive arcing in furnace element caused us to stop the experiment; a very homogeneous crystalline, high density, hard solid was obtained; marks the first true melt of Ti-V-Te glass obtained. Sample was reweighed because of apparent Te loss in top of vial; calculated composition was $Ti_{30}V_{30}Te_{40}$
96	$Ti_{15}V_{15}Te_{70}$	planned to try same method as 92-95, only at 1600°C for 2 hours	furnace began to arc when 1600°C was attained; discontinued after 15 minutes; results similar to no. 95; calculated resultant composition was $Ti_{23}V_{23}Te_{54}$
97	$Ti_{10}V_{10}Te_{80}$	changed composition to allow for Te vapor loss in vial; planned for 1600°C, 1 hour	only 1560°C was attained for only a few minutes; melting occurred but was not entirely homogeneous; calculated final composition was $Ti_{11}V_{11}Te_{78}$
98	$Ti_{10}V_{10}Te_{80}$	Repeat of 97, attempted 1600°C for 1 hour	vial and element failed; higher percentage of Te in beginning composition increased vial failure rate

TABLE II
(continued)

Sample No.	Composition	Method Used	Results
99	$Ti_{10}Ni_{10}Te_{80}$	planned 1600°C for 1 hour from the elements using a carbon container	attained 1560°C momentarily, element began to arc; partial melting obtained; sample was crystalline, porous
100	$Ti_{15}Ni_{15}Te_{70}$	same as 99	sample exploded
101	$Ti_{10}V_{10}Te_{80}$	from the elements, using BN liner, planned 1 hour at 1600°C	vial and furnace failed
102	$Ti_{10}Ge_{10}Se_{80}$	from the elements, graphite liner, 1 1/2 hours at 1200°C	porous, crystalline mass; did not really melt; red Ge-Se was present
103	$Ti_{10}Ge_{15}Se_{75}$	from the elements, graphite container, 1 hour at 1300°C	melted better than no. 102, but essentially the same results
104	$Ti_{10}Ge_{10}Se_{80}$	same as 102 and 103 only 1400°C, 1 hour	1370°C attained; melting was much better but sample still porous, crystalline
105	$Ti_{15}Ge_{15}Se_{70}$	Same as 104	1400°C attained for 1 hour; less Ge-Se evident than in 104; material more porous
106	$Ti_{15}Ge_{5}Se_{80}$	from the elements, 1 hour at 1400°C	did not melt; more porous, small amount of red Ge-Se scattered in sample
107	$Ni_{10}Ge_{10}Se_{80}$	from the elements, carbon container, 1 hour at 1400°C	sample exploded
108	$Ni_{10}Ge_{10}Se_{80}$	Repeat of 107 at lower temperature, 1 hour at 1200 °C	glass was formed, showed some infrared transmission
109	$Ni_{15}Ge_{15}Se_{70}$	from the elements, 1 hour at 1200°C	sample had a glass layer on top of a very crystalline phase; layers were immiscible; the glass region, according to emission spectrographic analysis, was Ge-rich, while the metallic or crystalline region was Ni-rich

TABLE II
(continued)

Sample No.	Composition	Method Used	Results
110	$Ti_{10}V_{10}Se_{80}$	from the elements, 1 hour at 1400°C, used long quartz tube to lower Se vapor pressure	fused, porous, crystalline material which did not melt
111	$Ni_{15}Ge_{10}Se_{75}$	repeat of 109 only lower Ge content, also quenched from 1000°C	sample essentially the same as 109
112	$Ni_{15}Ge_{15}Se_{70}$	same as 109 only quenched from 1000°C	glass material but very porous, material bunched up on side of vial while being quenched
113	$Ni_{15}Ge_{15}Se_{70}$	same as 112 only reacted 1300°C for 1 1/2 hours	homogeneous melt obtained except that when quenching, inner material was crystalline; outside of sample was amorphous glass
114	$Ni_{15}Ge_{15}Se_{70}$	same as 113 except reacted shorter period	results essentially the same except sample was not chemically stable
115	$Ni_{10}Ge_{10}Te_{80}$	from the elements, reacted at 1300°C for 1 hour, graphite container	mixture melted well but result had long crystals dispersed throughout a crystalline phase
116	$Ni_{15}Ge_{15}Se_{70}$	from the elements, 1 hour at 1300°C, graphite container, same as no. 113 only quenched from 1300°C	results similar to no. 113
117	$Ni_{10}Ge_{10}S_{80}$	planned to react at 1300°C for 1 hour	violent explosion ruined sample and furnace
118	$Ni_{15}Ge_{15}Se_{70}$	same as no. 113 only reacted for 18 hours	essentially the same results as no. 113
119	$Ni_{10}Ge_{10}S_{80}$	same as no. 117 only reacted at lower temperature, 1000°C for 1 hour	an amorphous glass, similar to Ge_2S_3 glass, on top of a crystalline, high-density solid

TABLE II
(continued)

Sample No.	Composition	Method Used	Results
120	$Ni_{10}Ge_{10}Se_{80}$	reacted at 1200°C for 1 hour	glassy material splattered up sides of the tube while being quenched
121	$Ni_{10}Ge_{10}Se_{80}$	a repeat of no. 120 only at 1300°C, 1 1/2 hours	results almost the same as no. 120
122	$Ni_{10}Ge_{10}Se_{80}$	a repeat of 120 only reacted at 1200°C for 1 hour and quenched from 900°C	results almost the same as 120 and 121
123	$Ni_{10}Ge_{15}Se_{75}$	reacted for 1 hour at 1300°C, quenched from 1300°C	most of the sample was an amorphous glass, but bottom was a crystalline solid
124	$(Li_2S)(NiSe_2)_3$	reacted from the elements, quartz vial, graphite container, using dried Li_2S, reacted at 1000°C for 1 hour	sample exploded, ruined furnace; quartz was attacked by Li ions
125	$Ni_{10}Zn_{10}Se_{80}$	prepared using ZnSe, Se and Ni; graphite container was used; reacted for 1 1/2 hours at 1225°C	material was essentially amorphous except for a crystalline phase scattered throughout; some infrared transmission (~ 5% out to 25 microns) was found, but low softening point (64°C) indicates the glass is essentially amorphous Se
126	$Ni_{10}Zn_{10}Se_{80}$	a repeat of 125 but reacted for 3 1/2 hours	a porous mass formed on the sample, believed to be a result of the ZnSe being wet
127	$Ni_{10}Zn_{10}Se_{80}$	gently heated ZnSe before sealing, reacted at 1300°C for 3 1/2 hours	a crystalline, solid mass formed in bottom; top portion was porous mass
128	$Ni_{10}Zn_{10}Se_{80}$	again tried to dry the ZnSe by heating, same as 127	results were worse; material very hard and porous

TABLE II
(continued)

Sample No.	Composition	Method Used	Results
129	$Ni_{10}Zn_{10}Se_{80}$	reacted for 1 hour at 1100°C to eliminate quartz as possible oxide source due to attack by Zn ions; also heated ZnSe to remove water	about same results as no. 128, apparently no melting
130	$Ni_{10}Zn_{10}Se_{80}$	heated ZnSe to drive off H_2O, carbon-coated quartz vial to eliminate possibility of Zn ion attack on quartz; reaction for 1 hour at 1200°C	essentially the same as 129; carbon coat did not withstand reaction conditions
131	$Ni_{10}Zn_{10}Se_{80}$	heated ZnSe, sample carefully degassed before sealing, reacted 1 1/2 hours at 1350°C, carbon-coated graphite tube	essentially the same results as no. 130
132	$Ni_{10}Zn_{10}Se_{80}$	using the elements Ni, Zn, Se, sample carefully degassed before sealing; intended reaction at 1375°C for 1 hour	exploded, ruined furnace
133	$Ni_{10}Zn_{10}Se_{80}$	Ni, Se, and ZnSe were degassed and heated overnight before sealing, reacted at 1200°C for 1 hour	appearance of amorphous material was markedly improved over 126-132; similar to 125, but still somewhat porous
134	$Ge_{10}Zn_{10}Se_{80}$	from the elements, graphite container, 1200°C for 1 hour	formed a good glass, showed good infrared transmission, but a softening point of only ~ 237°C
135	$(Na_2S)(ZnSe)_2$	using dried Na_2S and dried ZnSe, graphite container, reacted at 1250°C for 1 hour	material partially unreacted, porous, amorphous, some layering present
136	$Ge_{15}Zn_{15}Se_{70}$	using Ge, ZnSe, Se, a graphite container, 1200°C for 1 hour	an amorphous glass was formed; contained some crystallites; softening point ~ 310°C; some occlusions

TABLE II
(continued)

Sample No.	Composition	Method Used	Results
137	$Ge_{15}Zn_{15}Se_{70}$	repeat of 136, only reacted for 2 hours, quenched from 900°C	essentially same results as 136 but occlusions eliminated
138	$(Na_2S)(TiSe_2)_4$	from $TiSe_2$ and Na_2S dried, reacted 1 hour at 1400°C, carbon-coated quartz vial	quartz vial was devitrified by the Na ions; sample did not react
139	$Ge_{10}Mn_{10}Se_{80}$	from the elements, graphite liner, reacted at 1300°C for 1 hour	a glass was formed; splashed on the walls when quenched
140	$Mn_{15}Ge_{15}Se_{70}$	from the elements, reacted 1 hour at 1300°C, graphite container	a glass was formed; showed some infrared transmission (< 1%) and had a softening point of ~ 290°C; microscopic crystallites were present in the glass
141	$Ni_{10}Zn_{10}Te_{80}$	from the elements, reacted 1 hour at 1325°C	obtained a dense, crystalline silvery appearing material that is probably metallic
142	$Ge_{10}Zn_{10}Te_{80}$	from the elements, reacted 1 hour at 1300°C	results were similar to 141; extremely low-resistivity material
143	$Ge_{10}Mn_{10}Te_{80}$	from the elements, reacted 1300°C for 1 hour	appearance and properties similar to nos. 141 and 142

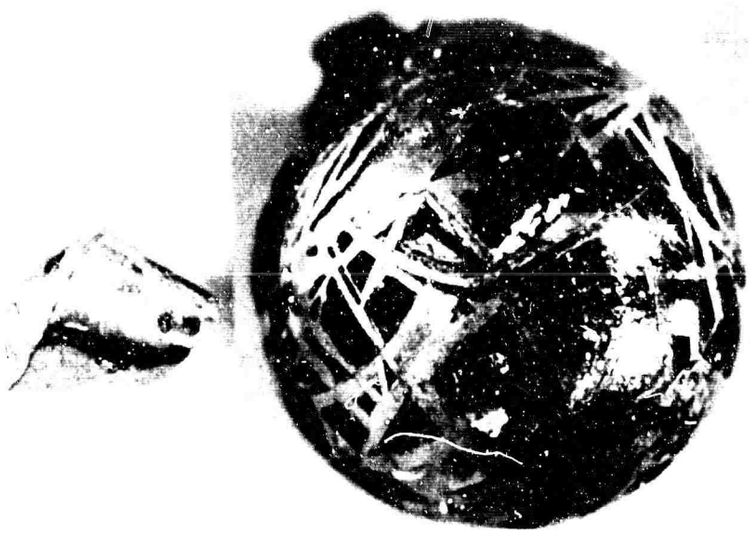

(a) Reactor Temperature
1300°C

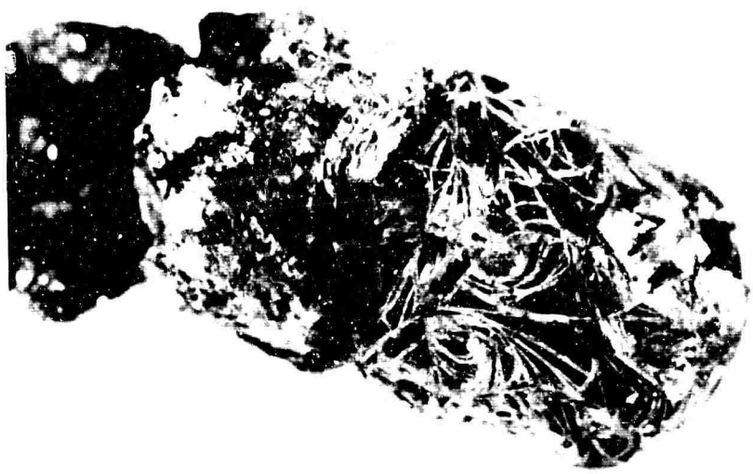

(b) Reactor Temperature
1500°C

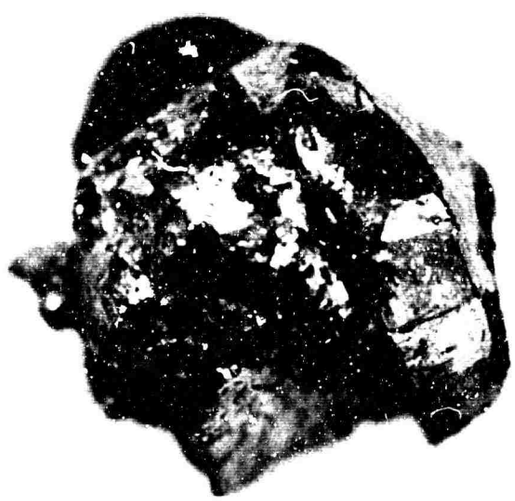

(c) Reactor Temperature
1600°C

)4580-4/4

Figure 4 Photographs of Typical Samples

was held for only a few minutes before the thermocouple failed and cut off the power to the furnace. Finally, in Figure 5, completely homogeneous melts were obtained for Ti-V-Te compositions when temperatures reached 1700°C [5(a), sample No. 95], 1600°C for 2 hours [5(b), sample No. 96], and 1600°C for 1 hour [5(c), sample No. 97]. Operating at such high temperatures produced a melt composition different from that of the beginning composition because an appreciable percentage of the Te from the melt was used to maintain a Te vapor in the vial. Then when the sample was cooled, the Te vapor condensed on the walls of the vial. Weighing the single piece sample after the quench and assuming all the material lost was Te produced these beginning and final compositions:

Sample No.	Figure No.	Beginning	Final
95	5(a)	$Ti_{15}V_{15}Te_{70}$	$Ti_{30}V_{30}Te_{40}$
96	5(b)	$Ti_{15}V_{15}Te_{70}$	$Ti_{23}V_{23}Te_{54}$
97	5(c)	$Ti_{10}V_{10}Te_{80}$	$Ti_{11}V_{11}Te_{78}$

Loss of excessive amounts of the chalcogen as vapor was a problem only in the 1600 to 1700°C temperature range.

Elements other than V were used with Ti in hopes of reducing the required 1600 to 1700°C compounding temperature range to a more practical 1200 to 1400°C. Ni and Ge were used. The chalcogen Se was also substituted for Te. However, even at 1400°C no homogeneous melts formed. The incidence of explosions increased because of the use of Se. The failure of glasses to form when homogeneous melts were obtained, coupled with the increased rate of failure of the furnace elements under such extreme conditions, forced the decision to abandon compositions containing Ti. It is likely that Ti-based glasses did not form because the coordination requirement for Ti is 6 or 8 Te atoms, and since Ti-Te bonds form in preference to Te-Te bonds, the amorphous chains of Te atoms are broken down. Similar considerations exist for V-Te and Zr-Te bonds. The net result is that crystallization occurs quite rapidly because of the decreased viscosity of the melt.

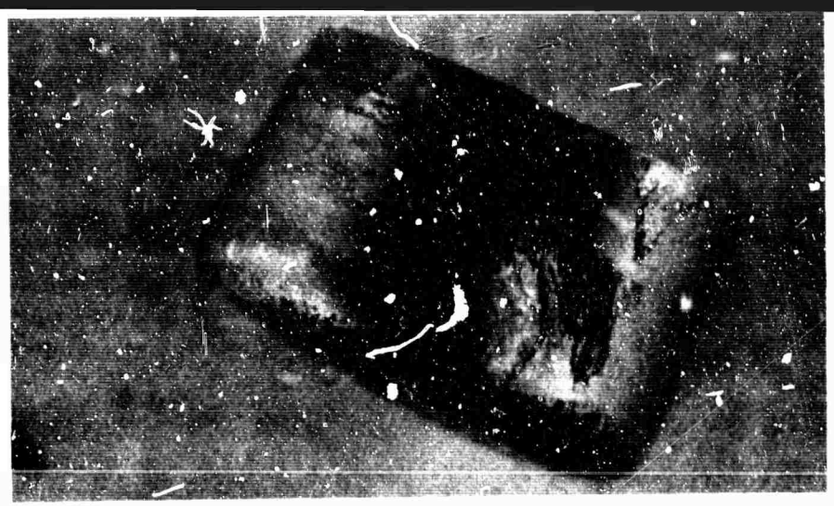

(a) SAMPLE NO. 95
REACTOR TEMPERATURE
1700° C

(b) SAMPLE NO. 96
REACTOR TEMPERATURE
1600° C FOR 2 HOURS

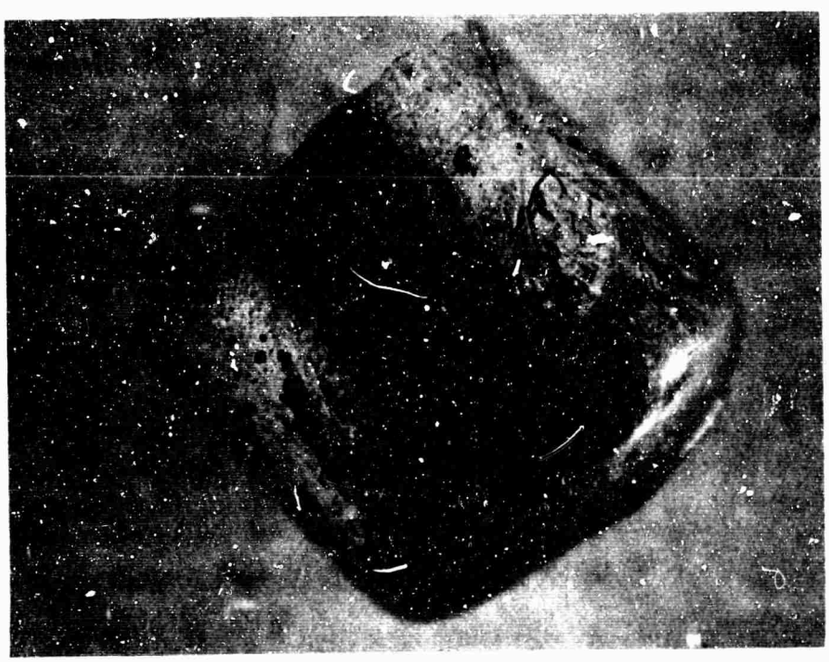

(c) SAMPLE NO. 97
REACTOR TEMPERATURE
1600° C FOR 1 HOUR

04846-3

Figure 5 Photographs of Typical Samples

Both the Ge and Ni elements are known to form compounds in which 4 atoms are coordinated around them. Compositions containing these elements were prepared and compounded at relatively low temperatures (1000-1200°C). Photographs of typical samples are shown in Figure 6. The appearance of the samples is deceiving. As the Ni concentration was increased, a two-phase material was obtained. A schematic drawing of the types of two-phase separation obtained is shown in Figure 7. Note that the external appearance of the glass was that of a homogeneous, single-phase glass. Often, the two-phase separation was not evident until the sample was sliced for evaluation. Emission spectrographic analysis indicated the glass phase was essentially Ge-Se; the crystalline phase was essentially a Ni-Se alloy. Preparation of a Ni-Ge-Te composition produced a very crystalline sample surrounded by a very thin shell of an amorphous material. The Te sample had a silvery, metallic appearance. An attempt to form a Ni-Ge-S glass produced results similar to those of the Ni-Ge-Se glass, in that the resulting sample was a Ge-S glass on top of a second phase of a Ni-S alloy. The use of Ni with ZnSe and Se produced glassy materials which suffered from the dispersion of immiscible Ni-Se alloys. Results were not reproducible, partly because the reactant ZnSe absorbed moisture. Generally, Ni did not produce good results.

The use of Zn and Mn with Ge in Zn-Ge-Se and Mn-Ge-Se did produce glasses. Compounding temperatures were 1200 to 1300°C. Softening points of the glasses were only ~ 300°C. Their appearance, infrared transmission, and softening point indicated glasses from these two systems are similar in properties to other Ge-Se glasses, such as those of the Ge-P-Se system.[2] The Te-based compositions Mn-Ge-Te, Ni-Zn-Te, Ni-Ge-Te, and Zn-Ge-Te were prepared and compounded at 1300°C. All had the same metallic luster and were very crystalline inside. Photographs of samples from three of the systems are shown in Figure 8. Table III summarizes results obtained for all systems studied.

Three unsuccessful attempts were made to form a glass from a crystalline chalcogenide compound. $NiSe_2$ was compounded with Li_2S, but the Li^+ ions attacked the quartz, causing devitrification. Na_2S was used with ZnSe and $TiSe_2$, but reactions did not occur properly.

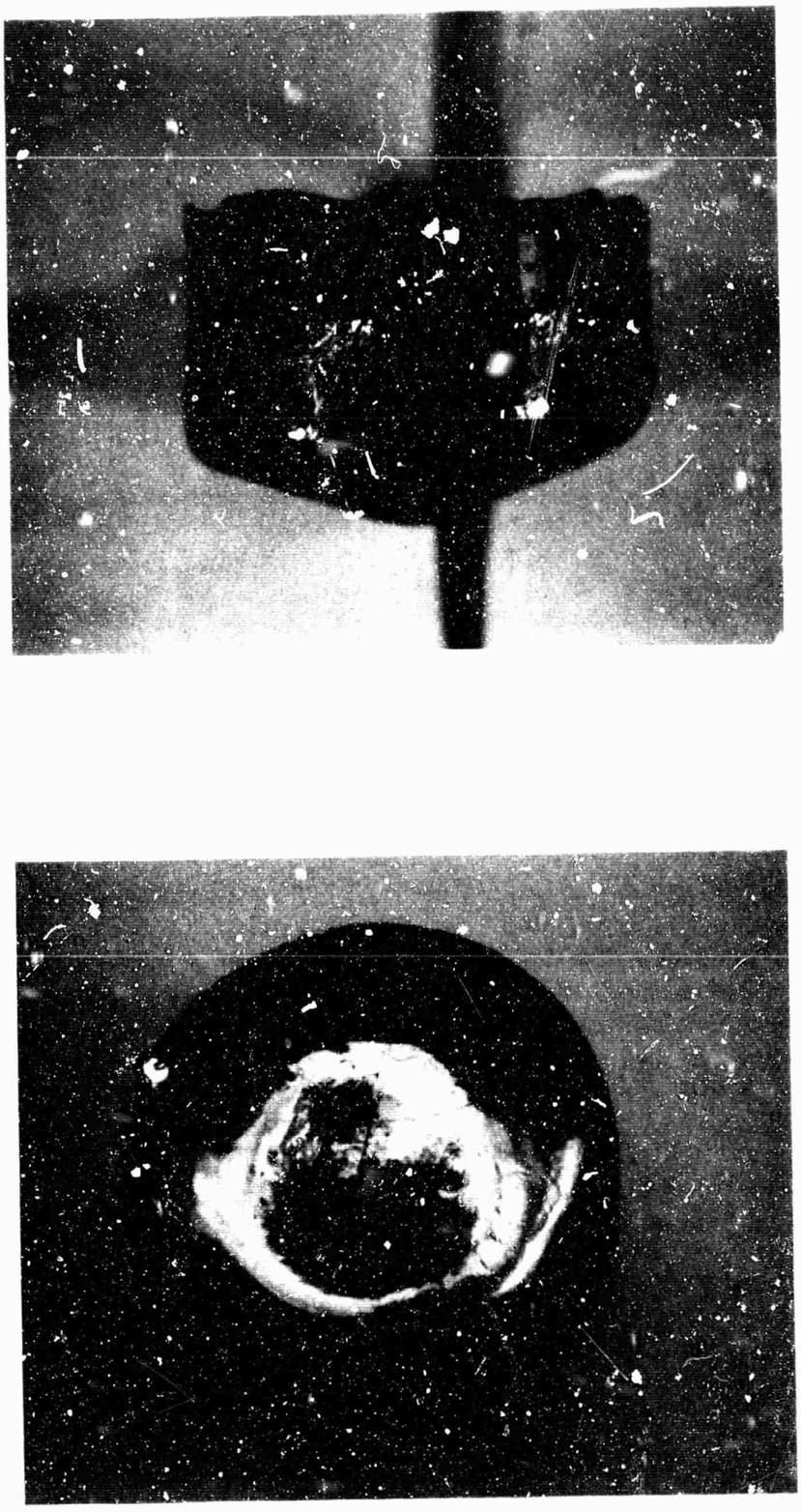

04846-2

Figure 6 Photographs of Ni-Ge-Se Glass

(a) GLASS OUTER SHELL

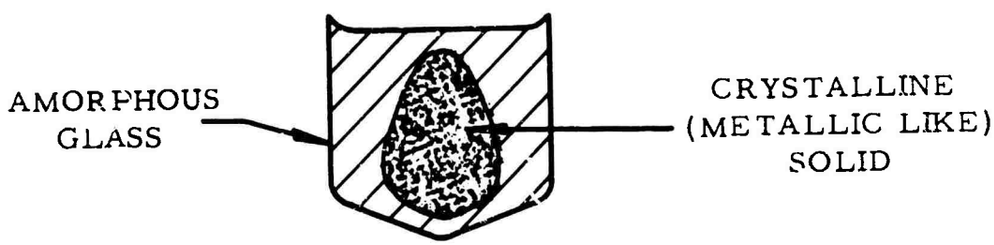

(b) LAYERED GLASS

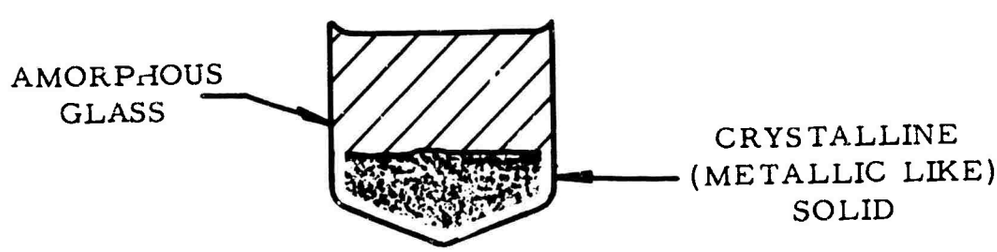

04846-1

Figure 7 Configuration of Two-Phase Glass Samples

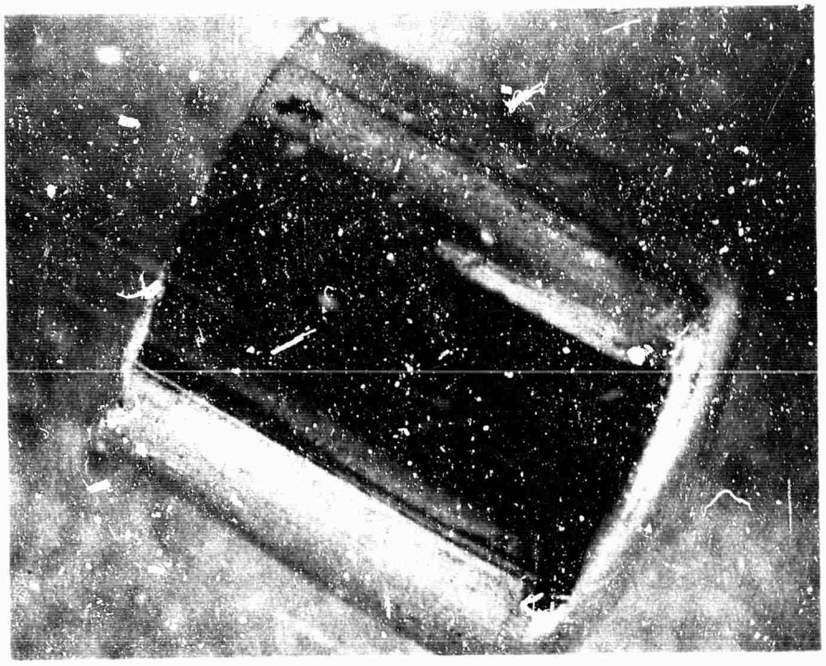

(a) Ni - Zn - Te

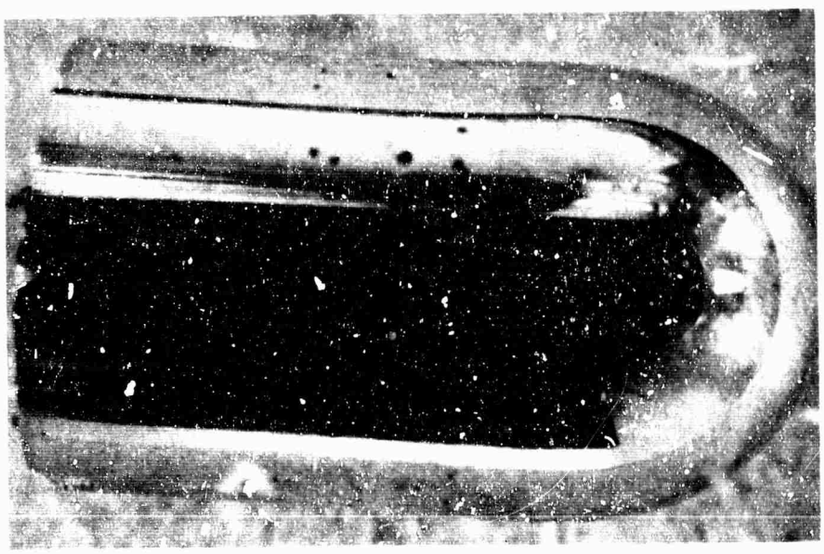

(b) Zn - Ge - Te

(c) Mn - Ge - Te

04846-4

Figure 8 Photographs of Typical Crystalline Tellurium Samples

TABLE III

Summary of Results for Systems Evaluated Using the Closed System Method

System	Homogeneous Melt Obtained	Glass	Remarks
	Tellurium Compositions		
Ti-V-Te	Yes at 1600-1700°C	No	dense, hard, crystalline solid
Mn-Ge-Te	Yes at 1300°C	No	crystalline solid, metallic appearance
Ni-Zn-Te	Yes at 1325°C	No	crystalline solid, metallic appearance
Ni-Ge-Te	Yes at 1300°C	No	crystalline solid, metallic appearance
Zn-Ge-Te	Yes at 1300°C	No	crystalline solid, metallic appearance
Ti-Ni-Te	No at 1500-1600°C	-	porous, crystalline
Ti-Si-Te	No at 1350°C	-	porous, crystalline
	Selenium Compositions		
Ni-Zn-Se	Yes at 1225°C	Yes	some infrared transmission, low softening point
Mn-Ge-Se	Yes at 1300°C	Yes	low infrared transmission, contains crystallites, softening point ~ 290°C
Zn-Ge-Se	Yes at 1200°C	Yes	low infrared transmission, contains crystallites, softening point ~ 310°C
Ni-Ge-Se	Yes at 1200°C	Yes	two-phase, Ge-rich glass, Ni-rich crystalline phase
Ti-V-Se	No at 1400°C	-	porous, crystalline
Ti-Ge-Se	No at 1400°C	-	porous, crystalline
	Sulfur Compositions		
Ni-Ge-S	Yes at 1000°C	Yes	Ge-rich glass on top of Ni-rich crystalline phase

SECTION IV

DISCUSSION OF RESULTS

This program was based on the theory that a glass would form from a homogeneous melt of a ternary composition, provided a large number of binary compounds were formed. The first result which modified our approach to this program was noted in systems containing Ti with Si and Ge. In these systems the chalcogen was heavily evolved from the melt because of preferential formation of Ti-Si and Ti-Ge bonds; therefore, V was substituted for Si or Ge as the third element in the systems. Homogeneous melts containing these elements were extremely hard to form because of the very high melting points of their compounds. When homogeneous melts did form and were quenched, glasses did not form because the high-viscosity ring and chain structure of the melt had been broken down by preferential formation of Ti and V chalcogen bonds. The high coordination requirements also contributed to this effect. With a low-viscosity melt, crystallization occurred readily. Thus, glasses similar in structure to those studied previously[1] cannot be formed from a melt containing a high percentage of an element which forms bonds that are several times more stable than chalcogen-chalcogen bonds.

SECTION V

CONCLUSIONS

1. An open system method utilizing an electric arc as a heat source is not suitable for evaluating chalcogenide compositions as glass-formers. Excessive loss of the elemental chalcogen prevents formation of a homogeneous melt. A closed system method of evaluation, using quartz vials supported by a graphite or a BN container, was found to be suitable for temperatures up to 1700°C.

2. Melts containing Ti-V-Te and Ti-V-Se compositions did not form until extremely high temperatures (1600 to 1700°C) were attained. Materials formed in this manner were extremely crystalline and had very low resistivities (< 0.1 ohm-cm). The high strength of the Ti and V chalcogen bonds made these elements effective in breaking down the amorphous structure of the parent chalcogen.

3. Se-based glasses containing the other transition elements Mn, Ni, and Zn, coupled with Ge, could be formed. The properties of these glasses were quite similar to those of Ge-Se glasses containing other IVA or VA elements studied in previous programs. Glasses of this nature preserve to a great extent the nature of the parent amorphous chalcogen.

4. No Te-based glasses containing transition elements were found to form.

REFERENCES

1. "Final Technical Summary Report for New High Temperature Infrared Transmitting Glasses," Office of Naval Research Contract Nonr 3810(00), TI Report No. 08-65-121, Texas Instruments Incorporated, 30 September 1965.

2. "Proposed Program to Prepare and Evaluate Titanium Chalcogenide Infrared Transmitting Glasses," Texas Instruments Incorporated, Proposal No. 21-R65, 28 July 1965.

UNCLASSIFIED

Security Classification

DOCUMENT CONTROL DATA - R&D

(Security classification of title, body of abstract and indexing annotation must be entered when the overall report is classified)

1 ORIGINATING ACTIVITY *(Corporate author)*

Texas Instruments Incorporated
13500 North Central Expressway
Dallas, Texas 75222

2a REPORT SECURITY CLASSIFICATION

Unclassified

2b GROUP

3 REPORT TITLE

Titanium Chalcogenide Infrared Transmitting Glasses

4 DESCRIPTIVE NOTES *(Type of report and inclusive dates)*

Final Technical Summary Report, 1 February 1966 through 31 January 1967

5 AUTHOR(S) *(Last name, first name, initial)*

Hilton, A. Ray

6 REPORT DATE

February 1967

7a TOTAL NO. OF PAGES

31

7b NO. OF REFS

2

8a CONTRACT OR GRANT NO.

N00014-66-C0085

b. PROJECT NO.

6E30K21

c.

d.

9a ORIGINATOR'S REPORT NUMBER(S)

08-67-18

9b OTHER REPORT NO(S) *(Any other numbers that may be assigned this report)*

10 AVAILABILITY/LIMITATION NOTICES

Distribution of this document is unlimited.

11 SUPPLEMENTARY NOTES

12 SPONSORING MILITARY ACTIVITY

Office of Naval Research, Washington, D. C. in cooperation with Advanced Research Projects Agency, Washington, D. C.

13 ABSTRACT

Two experimental approaches were used in attempts to compound non-oxide chalcogenide glasses based on the transition element titanium. The first was an open-chamber method in which the reactants were rapidly heated using a high-temperature dc arc. Heavy losses of volatile constituents during the arcing process prevented this method from producing a homogeneous melt. In the second method the reactants were sealed in a quartz vial which was supported by either a boron nitride or a graphite chamber. Compounding the Ti-V-Te system at 1600 to 1700°C produced a homogeneous melt, but glasses did not form when the melt was quenched. Selenium glasses containing the transition elements nickel, zinc, and manganese were formed but none had physical properties significantly better than selenium glasses evaluated previously. No tellurium-based glasses containing transition elements formed.

DD FORM 1 JAN 64 1473

UNCLASSIFIED

Security Classification

14 KEY WORDS	LINK A ROLE	LINK A WT	LINK B ROLE	LINK B WT	LINK C ROLE	LINK C WT
Non-oxide glass						

INSTRUCTIONS

1. ORIGINATING ACTIVITY: Enter the name and address of the contractor, subcontractor, grantee, Department of Defense activity or other organization *(corporate author)* issuing the report.

2a. REPORT SECURITY CLASSIFICATION: Enter the overall security classification of the report. Indicate whether "Restricted Data" is included. Marking is to be in accordance with appropriate security regulations.

2b. GROUP: Automatic downgrading is specified in DoD Directive 5200.10 and Armed Forces Industrial Manual. Enter the group number. Also, when applicable, show that optional markings have been used for Group 3 and Group 4 as authorized.

3. REPORT TITLE: Enter the complete report title in all capital letters. Titles in all cases should be unclassified. If a meaningful title cannot be selected without classification, show title classification in all capitals in parenthesis immediately following the title.

4. DESCRIPTIVE NOTES: If appropriate, enter the type of report, e.g., interim, progress, summary, annual, or final. Give the inclusive dates when a specific reporting period is covered.

5. AUTHOR(S): Enter the name(s) of author(s) as shown on or in the report. Enter last name, first name, middle initial. If military, show rank and branch of service. The name of the principal author is an absolute minimum requirement.

6. REPORT DATE: Enter the date of the report as day, month, year; or month, year. If more than one date appears on the report, use date of publication.

7a. TOTAL NUMBER OF PAGES: The total page count should follow normal pagination procedures, i.e., enter the number of pages containing information.

7b. NUMBER OF REFERENCES: Enter the total number of references cited in the report.

8a. CONTRACT OR GRANT NUMBER: If appropriate, enter the applicable number of the contract or grant under which the report was written.

8b, 8c, & 8d. PROJECT NUMBER: Enter the appropriate military department identification, such as project number, subproject number, system numbers, task number, etc.

9a. ORIGINATOR'S REPORT NUMBER(S): Enter the official report number by which the document will be identified and controlled by the originating activity. This number must be unique to this report.

9b. OTHER REPORT NUMBER(S): If the report has been assigned any other report numbers *(either by the originator or by the sponsor)*, also enter this number(s).

10. AVAILABILITY/LIMITATION NOTICES: Enter any limitations on further dissemination of the report, other than those imposed by security classification, using standard statements such as:

(1) "Qualified requesters may obtain copies of this report from DDC."

(2) "Foreign announcement and dissemination of this report by DDC is not authorized."

(3) "U. S. Government agencies may obtain copies of this report directly from DDC. Other qualified DDC users shall request through _____."

(4) "U. S. military agencies may obtain copies of this report directly from DDC. Other qualified users shall request through _____."

(5) "All distribution of this report is controlled. Qualified DDC users shall request through _____."

If the report has been furnished to the Office of Technical Services, Department of Commerce, for sale to the public, indicate this fact and enter the price, if known.

11. SUPPLEMENTARY NOTES: Use for additional explanatory notes.

12. SPONSORING MILITARY ACTIVITY: Enter the name of the departmental project office or laboratory sponsoring *(paying for)* the research and development. Include address.

13. ABSTRACT: Enter an abstract giving a brief and factual summary of the document indicative of the report, even though it may also appear elsewhere in the body of the technical report. If additional space is required, a continuation sheet shall be attached.

It is highly desirable that the abstract of classified reports be unclassified. Each paragraph of the abstract shall end with an indication of the military security classification of the information in the paragraph, represented as *(TS)*, *(S)*, *(C)*, or *(U)*.

There is no limitation on the length of the abstract. However, the suggested length is from 150 to 225 words.

14. KEY WORDS: Key words are technically meaningful terms or short phrases that characterize a report and may be used as index entries for cataloging the report. Key words must be selected so that no security classification is required. Identifiers, such as equipment model designation, trade name, military project code name, geographic location, may be used as key words but will be followed by an indication of technical context. The assignment of links, rules, and weights is optional.