NOLTR 66-91

AD646601

INVESTIGATION OF A BIMETALLIC WIRE AS A MILLISECOND DELAY ELEMENT

4 JANUARY 1967

NOL

UNITED STATES NAVAL ORDNANCE LABORATORY, WHITE OAK, MARYLAND

NOLTR 66-91

D D C
RECEIVED
FEB 13 1967
C

Distribution of this document is unlimited.

ARCHIVE COPY

DISCLAIMER NOTICE

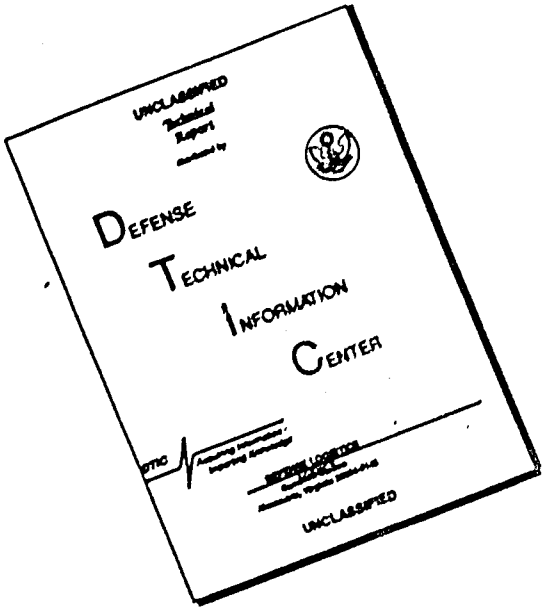

THIS DOCUMENT IS BEST QUALITY AVAILABLE. THE COPY FURNISHED TO DTIC CONTAINED A SIGNIFICANT NUMBER OF PAGES WHICH DO NOT REPRODUCE LEGIBLY.

INVESTIGATION OF A BIMETALLIC WIRE AS A MILLISECOND DELAY ELEMENT

by
Jerry W. Forbes

ABSTRACT: A fuse wire composed of palladium and aluminum (pyrofuze) was investigated as a possible millisecond delay item. The single strand wire and the eight strand braid were both initiated by a constant current device.

Delay times of less than 30 milliseconds were obtained from single strand bridged fuse wire, while delay times above 50 milliseconds were obtained from eight strand fuse wire braid of one and two inch lengths. Variations of the delay times were less than 10% when the initiating currents were maintained at two amperes above the threshold currents. The delay times were dependent upon the input power, particularly for the very short delay times.

EXPLOSION DYNAMICS DIVISION
EXPLOSIONS RESEARCH DEPARTMENT
U. S. NAVAL ORDNANCE LABORATORY
White Oak, Silver Spring, Maryland

NOLTR 66-91 4 January 1967

INVESTIGATION OF A BIMETALLIC WIRE AS A MILLISECOND DELAY ELEMENT

This work was done under the Naval Ordnance Systems Command Task ORD-033-211/092-1/F008-08-11, Improved materials, design techniques and test methods for underwater explosive train components. The work of this report will be of interest to people involved in pyrotechnics, explosive component designers, and others interested in explosives. The identification of commercial materials implies no endorsement or criticism by the U. S. Naval Ordnance Laboratory.

It is a pleasure to acknowledge the cooperation of Louis A. Rosenthal, Howard S. Leopold, and Vincent J. Menichelli for their helpful suggestions and encouragement in conducting the experiments. It is also a pleasure to acknowledge the helpful suggestions on the manuscript by Nathaniel Coleburn and Irving Kabik.

E. F. SCHREITER
Captain, USN
Commander

C J Aronson

C. J. ARONSON
By direction

CONTENTS

	Page
INTRODUCTION	1
EXPERIMENTAL ASSEMBLIES	2
RESULTS	3
DISCUSSION	4
CONCLUSIONS	6
REFERENCES	27
APPENDIX A	A-1
APPENDIX B	B-1

ILLUSTRATIONS

Table 1	Threshold Current for Pyrofuze Bridgewire	7
Table 2	Threshold Current for Bridged Pyrofuze Braid	8
Table 3	Time Necessary to Heat 1-Mil Diameter Single Strand Pyrofuze Bridgewire to Ignition	9
Table 4	Time to Heat 2-Mil Diameter Single Strand Pyrofuze Bridgewire to Ignition	10
Table 5	Time to Heat 3-Mil Diameter Single Strand Bridgewire to Ignition	11
Table 6	Time to Heat Bridged 2M8SB to Ignition	12
Table 7	Time to Heat Bridged 3M8SB and 5M8SB to Ignition	13
Table 8	Time to Heat 4M8SB to Ignition	14
Table 9	Delay Times of 2M8SB Pyrofuze Braid	15
Table 10	Delay Times of 3M8SB Pyrofuze Braid	16
Table 11	Delay Times of 4M8SB Pyrofuze Braid	17
Table 12	Delay Times of 5M8SB Pyrofuze Braid	18
Table 13	Delay Times of 2M8SB Pyrofuze with Double Glass Insulation	19
Table 14	Delay Times of 4M8SB Pyrofuze with Double Glass Insulation	20
Table 15	Delay Times of 5M8SB Pyrofuze with Double Glass Insulation	21
Figure 1	Bridging Methods for Single Strands and 8-Strand Braid	22
Figure 2	Timing Circuits	23
Figure 3	Ignition Times of Single Strand Pyrofuze Bridgewires as a Function of Diameter and Current	24
Figure 4	Ignition Times of Pyrofuze Braid as a Function of Diameter and Current	25
Figure 5	Total Delay Times of Pyrofuze Braids with Double Glass Insulation as a Function of Braid Length	26

I. INTRODUCTION

An ordnance interest in intiation delays of a few milliseconds has led to the investigation of a fuse wire composed of palladium and aluminum, called pyrofuze*. A reasonable control of time tolerances for temperatures to 500°F was reported for delay times of 150 milliseconds and above by W. R. Peterson[1]/** of Frankford Arsenal.

The properties of pyrofuze indicate a possible use in many igniter applications. Its insensitivity to shock, impact, and vibration, and its exothermic reaction suggests a possible use as a propellant igniter. Safety features are apparent from the low resistance of pyrofuze and high input energy required to cause pyrofuze to react.

Pyrofuze is supplied in many forms such as foil, wire, granules, and pellets. The metals of the bimetallic combination of palladium and aluminum are in intimate contact with each other; the core being aluminum and the outer jacket palladium. When heated to the melting point of aluminum (660°C) an exothermic alloying reaction takes place. Calorimetric measurements show that pyrofuze liberates 327 calories per gram, resulting in temperatures of 2200° to 2800°C. The reaction occurs at a rapid predictable rate without the support of oxygen, and will take place equally well in air, in an inert atmosphere, or in a vacuum.

The purpose of the work was to establish whether pyrofuze wire could be used as a millisecond time delay element with close time tolerances. Two obvious factors affecting the delay times are (1) burning rate, and (2) ignition time (time to heat wire to reaction temperature). The burning rate and ignition time are influenced by dissipative effects, uniformity of material, and surrounding atmosphere all of which can be held relatively constant by proper design. The ignition time also depends upon the method used to heat the fuse wire to its ignition temperature. In the experiments reported here the wire was heated to ignition by a constant current.

Our interest in delay times of only a few milliseconds led us to carefully question the role of ignition times in determining total delay times. Obviously, it is not desirable to have the ignition time play an important role because it is a function of input power. A simple analysis of circuit parameters gives an equation to estimate ignition times,

$$t = 3.46 \frac{D^4}{I^2} \qquad (1)$$

D = diameter of pyrofuze wire in mils.

---

*Pyrofuze Corp., an affilitate of Sigmund Cohn Corp., Mount Vernon, New York is the manufacturer.

**References are on page 26.

t = time in milliseconds

I = current in amperes

This equations's derivation is given in Appendix A and is based mainly upon the assumption that dissipative effects can be neglected. The equation indicates that for constant currents of 1-7 amps the times to ignite the fuse wire may be significant.

The existence of a threshold current (i.e., a minimum current necessary to cause the fuse wire to react) is evidence that dissipative effects are present. The assumption that dissipative effects can be ignored is good only when the energy input is large in comparison to the dissipative losses. Therefore, an analysis was made to determine the extent of the dissipative effects. This is given in Appendix B.

II. EXPERIMENTAL ASSEMBLIES

The pyrofuze braided wire is coded by writing the diameter of a single strand first and then the number of strands in the braid. For example, 4M8SB means 4 mil diameter strands in an 8-strand braid. The 4M8SB is covered by a Military Specification (MIL-B-60225)(MU).

In all cases the wires were heated to threshold temperature by a constant current device. The constant current device was basically just a double emitter-follower that maintained a constant voltage across a resistor that was in series with the pyrofuze wire. The stability is primarily limited by thermal drift but for the times involved here the thermal drift is insignificant. The rise time of the constant current device was 40 microseconds.

Examination of Figure 1 shows the bridging method employed for both single strand wire and braid. For braided wires the braid was unraveled approximately 0.15 inch and all but two of the strands were trimmed back to the braid. The two longer strands were then soldered to a conventional initiator plug having a 0.05-inch gap between the pins' nearest edges. By this approach it was not necessary to supply the energy to heat the complete braid to the ignition point since the bulk of the heating will occur in the 0.015 inch lengths free of the braided portion. The single strand wires were bridged by stretching the wire across the initiator plug gap and then soldering the wire to the ends of the brass pins. The excess wire was then trimmed away from the plug.

To measure the threshold currents of 1- and 2-mil diameter single strand bridgewires, the constant current device with a range of 0-6.5 amps was slowly brought up to the current which started the exothermic reaction. This current was then recorded as the threshold current.

A photodiode circuit (see Figure 2) with a rise-time of approximately 100 microsec was used as a stop signal and a voltage pulse across a 1-ohm resistor was used as a starting signal to measure the time to heat the wire to ignition. The photodiode was placed 0.5 - 0.75 inches away from the bridgewire. When the bridgewire reacted an immediate release of light caused the photodiode resistance to decrease resulting in a voltage pulse which stopped the counter. The times recorded by the Beckman scaler counter was

just the ignition time with times good to within 0.2 millisecond.

Delay times of pyrofuze braid were measured by using a pulse across a 1-ohm resistor (in series with the bridge wire) as the starting signal for the counter and a photodiode pulse circuit as the stop signal (see Figure 2). The photodiode was placed perpendicular to the axis of the braid. The photodiode was then secured in place by placing it into the cylindrical cavity of a binding screw post and then tightening the post onto the photodiode. The photodiode was recessed in the cavity by approximately 0.1 inch so as not to prematurely stop the counter. The delay times of insulated braid were measured by the same technique used on the bare braid. The ends of the woven double fiberglas insulation at the end was kept as long as possible consistent with permitting the photodiode to view a bare portion of braid.

III. RESULTS

The threshold currents for single strand bridgewire of 50-mil length are given in Table 1. The threshold currents of 1-mil diameter bridgewires varied from 0.620 - 0.80 amps for resistances of 0.320 and 0.260 ohms respectively, the threshold current for 2-mil diameter bridgewire varied from 2.250 - 2.725 amps for resistances of 0.099 and 0.078 ohms respectively.

The threshold ignition currents for pyrofuze braid are listed in Table 2 with a current range of 0.90 - 1.30 amps for 0.40 and 0.310 ohms resistance respectively for 2M8SB. The threshold currents for 3M8SB ranged from 1.35 to 1.65 amps for 0.235 and 0.22 ohms resistance respectively. The threshold currents for 4M8SB ranged from 2.40 to 2.80 amperes for 0.160 and 0.130 ohms resistance. The threshold currents for 5M8SB ranged from 3.20 to 3.50 amps for 0.125 and 0.105 ohms resistance respectively. It is instructive to point out that the product of the threshold current times the wires resistance appears to be a constant for both bridgewires and bridged braid.

The ignition times for 1-, 2-, and 3-mil diameter single strand bridgewires are plotted as time/(diameter)^4 vs (current)$^{-2}$ in Figure 3. Variations from the mean time for input currents maintained 2 amperes above threshold were smaller than 10% for the 1-mil diameter single strand bridgewire, 8.5% for the 2-mil diameter single strand bridgewire, and 1.4% for 3-mil diameter single strand bridgewire. The times involved are 1-30 millisec (See Tables 3, 4, and 5); therefore the variations are numerically small.

The measured ignition times for the braided wires are given in Tables 6, 7, and 8 respectively. The ignition time variations (ignoring resistance differences) for 2M8SB at 3-amperes input current was 2%, 3M8SB at 4.4 amperes was 40%, 4M8SB at 5.0 amperes was 22%, and for 5M8SB at 4 amperes was 20%. The ignition times for 2M8SB and 3M85B and 4M8SB and 5M8SB pyrofuze braid of approximately 0.15-inch length are plotted as time/(diameter)^4 vs (current)$^{-2}$ in Figure 4. The variation from this curve is naturally less when currents well above threshold are maintained for ignition.

Delay times (ignition time plus burning time) were recorded for lengths of approximately 1 and 2 inches. The linear burning rates were obtained by subtracting the calculated ignition times from the measured delay times and dividing into the length. The 2M8SB and 3M8SB gave average burning rates of 23.8 and 18.6 inches/second respectively with variations of less than 8% when initiated by 5 amperes of constant current. Delay times and burning rates for 2M8SB and 3M8SB are given in Tables 9 and 10 respectively.

Delay times for 4M8SB and 5M8SB uninsulated pyrofuze braid (See Tables 11 and 12) of 2 inch lengths were approximately 200 and 300 milliseconds respectively for input currents of 6.5 amperes. The linear burning rates of 4M8SB and 5M8SB with input currents of 6.5 amps were 14.7 and 10.2 inches per second with variations of 5% and 20% respectively if the sporadic times are ignored.

The delay times of double glass insulated 2M8SB, 4M8SB and 5M8SB braid are reported in Tables 13, 14, and 15. A burning rate of 15.1 inches per second was found for 2M8SB with a variation of 5% for three trials when initiated by 5 amps. A burning rate of 10.9 inches per second was found for 4M8SB with a variation of 13% for 13 trials when ignited by 6.5 amps. A burning rate of 8.9 inches per second was found for 5M8SB with variations less than 18% for 13 trials when ignited by 6.5 amps.

A convenient guide for choosing an experimental arrangement which will result in a known delay time is provided by a plot (Fig. 5) of total delay time as a function of braid length. The ignition currents for the wires were maintained at 2 amps above threshold.

IV. DISCUSSION

The threshold current is limited by the amount of dissipative effects present and should display a nondependence of length (as observed for lengths greater than a couple of inches), since the energy per unit mass required to heat to the reaction temperature should be constant if end effects can be neglected. The wires tested here had lengths of magnitude 0.20 inches where dissipative effects and end effects caused the threshold current to be a function of length (See Appendix B).

Newton's law of cooling allows an approximate description of the dissipative effects for the temperature range that is of interest to this report. Newton's law of cooling[2] simply stated says that the energy lost due to conduction, convection, and radiation is all roughly proportional to the temperature difference. Since the temperature difference is varying, one can assume an average temperature which describes the amount of energy lost. The energy of threshold should represent dissipative effects as a function of the threshold current.

$$E_{th} = I_{th}^2 R t = \frac{K}{R} t \qquad (2)$$

where R is the ambient wire resistance and K is a constant and t is time in milliseconds.

The observed fact that the product of the threshold current times the ambient wire resistance is a constant has been used to obtain the final expression on the right of the equals sign of Equation 2. The constant K in Equation 2 for bridged braid is 0.139 and describes the threshold currents within 7% of measured values. The value of K for single strand bridgewires was determined to be: K = 0.044 which gives the threshold currents within the experimental error. The values of the constant K's were found by applying least square fits of the measured data to Equation 2.

The plot of ignition time as a function of diameter and current (See Figure 3-4) show that Equation 1 does not adequately describe the time to ignition even when the ignition currents are well above the threshold. An expression that does describe ignition times within 30% for braid was derived in Appendix B which gives

$$t = \frac{3.46\ D^4}{I^2 - \frac{K}{R^2}} \qquad (3)$$

where D is diameter of the wire in mils, I is the current in amperes, K a constant, R the ambient wire resistance. This equation is highly sensitive to the resistance value. Measurement of the resistance of the wire is difficult because of end effects and contact resistance but these effects should remain relatively constant for the same design. Therefore, these effects should be taken care of by the iterated constant K of Equation 3. The value of constant K in Equation 3 for bridged braid is 0.113 as found by applying a least square fit to the ignition time data to Equation 3. Threshold currents are within 17% of measured values if this value of K is used in Equation 2 which gives support to Equation 3.

The total delay times for pyrofuze braid given in the tables are times that include the ignition time and the time for the braid to "burn" a known distance. The delay times of pyrofuze braid in air were controllable for times above 50 millisec. The delay times, however, were dependent upon input current and reaction rate of the braid. The best results in delay times were obtained when insulation was used on the braid. The insulation perhaps prevented the hot particles from jumping ahead and starting the braid to burn or prematurely activating the photodiode switch which could have occurred with the uninsulated braid. As shown by comparing Tables 11 and 14 the delay times were increased by approximately 20% because of the heat lost to the insulation, but no erratic times were obtained which occasionally occurred without insulation. The significant factor observed from the delay times of insulated braid is that the variation is reduced significantly while the rate of burning decreases notably compared to bare braid.

The burning rate of pyrofuze appeared to be constant for lengths of one and two inches. The burning rates given in the tables were obtained by

subtracting the calculated ignition times (Eq. 3) from the total delay times and then dividing this time into the braid length. Equation 3 allowed the ignition times to be separated from the delay times with fair accuracy. The accuracy of Equation 3 is limited by the accuracy of the resistance measurement.

This separation of times allows the burning rate to be studied independent of the ignition system. The burning rate is reproducible and constant for proper design. The average burning rate of 4M8SB in air reported here agrees well within experimental error with Peterson's[1] reaction rate on 6-inch long braid of 14.8 inches per second.

The variations of ignition times for single strand bridgewires at a particular constant current are acceptable. A very short time delay seems feasible if an accurate constant current device is used to heat the wire to ignition and the resistance of the wire is held to a close tolerance. It is implicit also that if ignition is made to occur by an adiabatic pulse such as from a condenser having a discharge time constant very small compared to the thermal time constant of the pyrofuze system uniform short delays will result

V. CONCLUSIONS

1. Single strand bridgewire can be used for 1-30 millisecond delays with acceptable variations. The specific delay time is determined by the input power and mass of the wire.

2. Pyrofuze braid can be used for 50-300 millisecond delays with acceptable variations when ignited by constant current. The specific times are determined mainly by the mass of the braid when input currents are 2 amps above threshold.

3. Newton's law of cooling is adequate to describe dissipative effects for the systems used in this report.

4. The burning rate of pyrofuze braid is notably dependent upon the surrounding material.

5. Dissipative effects do not play an appreciable role in delay times of ignition of wires when the input current is well above the threshold for ignition.

6. Pyrofuze braid shows promise as a delay element. However, for short delay times an initiating system using a microsecond time pulse with sufficient energy is desirable to reduce the time required to heat the wire to its reaction temperature.

TABLE 1 THRESHOLD CURRENT FOR PYROFUZE BRIDGEWIRE

Single Strand 1-Mil Diameter Bridgewire										
R (Ohms)	0.240	0.255	0.260	0.260	0.280	0.280	0.280	0.295	0.31	0.320
I (Amps)	0.760	0.720	0.735	0.800	0.670	0.690	0.700	0.645	0.650	0.620
IR (Volts)	0.182	0.184	0.191	0.208	0.188	0.193	0.196	0.190	0.201	0.198
Single Strand 2-Mil Diameter Bridgewire										
R (Ohms)	0.074	0.078	0.078	0.082	0.082	0.082	0.084	0.098	0.099	-
I (Amps)	2.680	2.700	2.725	2.550	2.575	2.625	2.450	2.375	2.250	-
IR(Volts)	0.198	0.211	0.212	0.209	0.211	0.215	0.206	0.233	0.223	-

TABLE 2 THRESHOLD CURRENT FOR BRIDGED PYROFUZE BRAID

Threshold Current	2M8SB	3M8SB	4M8SB	5M8SB
R (Ohms)	0.310	0.220	0.130	0.105
I (Amps)	1.30	1.65	2.80	3.50
IR (Volts)	0.403	0.363	0.364	0.368
R (Ohms)	0.380	0.235	0.130	0.110
I (Amps)	0.95	1.35	2.80	3.5
IR (Volts)	0.361	0.317	0.364	0.385
R (Ohms)	0.400	0.240	0.135	0.115
I (Amps)	0.90	1.45	2.70	3.25
IR (Volts)	0.360	0.348	0.365	0.374
R (Ohms)	0.440	0.250	0.160	0.125
I (Amps)	0.85	1.45	2.40	3.20
IR (Volts)	0.374	0.363	0.384	0.400
R (Ohms)	-	-	0.165	-
I (Amps)	-	-	2.40	-
IR (Volts)	-	-	0.396	-

TABLE 3 TIME NECESSARY TO HEAT 1-MIL DIAMETER SINGLE STRAND PYROFUZE BRIDGEWIRE* TO IGNITION**

Resistance (Ohms)	Current (Amperes)	Time (Milliseconds)	Mean Time (Milliseconds)
.282	1.0	9.64	6.65
.285	1.0	6.80	
.285	1.0	5.30	
.290	1.0	4.90	
.286	2.0	1.50	1.21
.288	2.0	1.52	
.300	2.0	1.32	
.325	2.0	0.20	
.266	3.0	0.69	0.72
.275	3.0	0.69	
.278	3.0	0.71	
.287	3.0	0.81	
.289	3.0	0.69	
.300	3.0	0.72	
.288	4.0	0.55	0.55
.290	4.0	0.51	
.290	4.0	0.57	
.293	4.0	0.51	
.296	4.0	0.60	

*Wire length of 0.13 centimeters.
**This wire has a threshold current of approximately 0.8 amperes.

TABLE 4 TIME TO HEAT 2-MIL DIAMETER SINGLE STRAND PYROFUZE BRIDGEWIRE* TO IGNITION**

Resistance (Ohms)	Current (Amperes)	Time (Milliseconds)	Mean Time (Milliseconds)
.076	2.6	33.4	90.7
.081	2.6	185.2	
.089	2.6	18.4	
.089	2.6	126.0	
.072	3.3	9.6	8.7
.079	3.3	8.3	
.081	3.3	8.5	
.082	3.3	8.3	
.084	3.3	8.9	
.084	3.3	10.0	
.085	3.3	8.0	
.088	3.3	8.2	
.074	4.0	6.2	5.5
.077	4.0	5.2	
.079	4.0	5.2	
.079	4.0	5.7	
.080	4.0	5.9	
.083	4.0	5.4	
.084	4.0	5.1	
.090	4.0	4.8	
.075	4.4	4.6	4.2
.086	4.4	4.0	
.086	4.4	4.1	
.102	4.4	4.2	

*Wire Length of 0.13 Centimeters.
**This wire has a threshold current of approximately 2.5 amperes.

TABLE 5 TIME TO HEAT 3-MIL DIAMETER SINGLE STRAND BRIDGEWIRE* TO IGNITION**

Resistance (Ohms)	Current (Amperes)	Time (Milliseconds)	Mean Time (Milliseconds)
.042	4.95	206.2	-
.043	4.95	-	
.044	4.95	-	
.042	5.6	29.5	
.042	5.6	173.6	
.043	5.6	55.4	
.043	5.6	58.9	75.5
.045	5.6	41.8	
.048	5.6	93.8	
.042	6.1	25.0	
.043	6.1	45.2	
.047	6.1	21.4	28.0
.049	6.1	25.2	
.054	6.1	23.3	
.039	6.5	20.2	
.039	6.5	20.5	
.043	6.5	22.9	21.8
.044	6.5	20.4	
.044	6.5	25.1	

*Wire Length of 0.13 Centimeters.
**This wire has a threshold current of approximately 4.7 amperes.

TABLE 6 TIME TO HEAT BRIDGED 2M8SB TO IGNITION*

Resistance (Ohms)	Current (Amperes)	Calculated Time (Milliseconds)	Measured Time (Milliseconds)	Mean Time (Milliseconds)
.43	1.0		1,083.0	
.33	1.5	45.6	49.1	
.34	1.5	43.5	47.6	
.46	1.5	32.2	35.5	41.3
.48	1.5	31.4	36.7	
.54	1.5	29.7	37.4	
.42	2.0	16.5	81.0+	
.46	2.0	16.0	19.8	
.49	2.0	15.7	18.1	19.2
.51	2.0	15.5	20.3	
.53	2.0	15.4	11.1+	
.64	2.0	14.9	18.6	
.38	3.0	6.7	9.2	
.46	3.0	6.5	9.4	
.48	3.0	6.5	9.3	9.4
.56	3.0	6.4	9.4	
.59	3.0	6.4	9.5	
.63	3.0	6.4	9.5	

Obvious sporadic times are not averaged.

*This wire has a threshold current of approximately 1.0 amperes.

TABLE 7 TIME TO HEAT BRIDGED 3M8SB* AND 5M8SB** TO IGNITION

Braid Size	Resistance (Ohms)	Current (Amperes)	Calculated Time (Milliseconds)	Measured Time (Milliseconds)	Mean Time (Milliseconds)
3M8SB	.228	3.4	29.8	32.5	
	.242	3.4	29.1	37.7	35.0
	.330	3.4	26.6	34.9	
	.125	4.4	23.1	29.4	
	.145	4.4	20.0	23.7	
	.165	4.4	18.4	25.0	
	.169	4.4	18.2	19.4	
	.180	4.4	17.7	19.6	21.0
	.216	4.4	16.5	17.8	
	.220	4.4	16.5	19.8	
	.223	4.4	16.4	17.9	
	.285	4.4	15.6	16.7	
5M8SB	.116	4.0	284.0	279.6	
	.125	4.0	246.3	243.7	
	.128	4.0	239.3	237.7	233.0
	.151	4.0	195.9	200.0	
	.154	4.0	192.3	205.0	

*The 3M8SB braid has a threshold current of approximately 1.5 amperes.
**The 5M8SB braid has a threshold current of approximately 3.25 amperes.

TABLE 8 TIME TO HEAT 4M8SB TO IGNITION*

Resistance (Ohms)	Current (Amperes)	Calculated Time (Milliseconds)	Measured Time (Milliseconds)	Mean Time (Milliseconds)
.139	3.5	138.2	139.4	
.160	3.5	112.9	117.4	
.164	3.5	110.0	116.4	113.3
.166	3.5	108.6	103.7	
.186	3.5	98.5	92.2	
.135	4.0	90.3	84.8	
.143	4.0	84.5	82.7	82.5
.150	4.0	80.6	79.9	
.112	4.3	93.3	92.0	
.120	4.3	78.6	73.6	
.121	4.3	82.1	80.9	75.9
.133	4.3	73.1	69.7	
.158	4.3	63.4	63.5	
.098	5.0	66.8	62.2	
.113	5.0	54.8	75.2	61.6
.114	5.0	54.3	58.8	
.116	5.0	53.3	50.2	

*This wire has a threshold current of approximately 2.5 amperes.

TABLE 9 DELAY TIMES OF 2M8SB PYROFUZE BRAID*

Length of Braid (in.)	Resistance (Ohms)	Current (amps)	Delay Time (millisec)	Calculated Ignition Time (millisec)	Linear Burning Rate (in/sec)	Average Linear Burning Rate (in/sec)
1.28	.41	3.0	68.4	6.6	20.7	22.4
1.28	.63	3.0	65.2	6.4	21.8	
1.30	.48	3.0	59.3	6.5	24.6	
1.26	.86	4.0	58.0	3.5	23.1	22.8
1.28	.51	4.0	60.1	3.6	22.7	
1.30	.46	4.0	58.2	3.6	23.8	
1.32	.80	4.0	65.3	3.5	21.4	
1.24	.84	5.0	56.9	2.2	22.7	24.0
1.26	.46	5.0	54.2	2.3	24.3	
1.28	.37	5.0	53.7	2.3	24.9	
1.30	.34	5.0	56.8	2.3	23.9	
2.26	.70	3.0	100.6	6.3	24.0	24.0
2.30	.48	3.0	101.0	6.5	24.3	
2.30	.47	3.0	103.1	6.5	23.8	
2.24	.60	4.0	94.3	3.5	24.7	24.3
2.26	.68	4.0	99.6	3.5	23.5	
2.30	.72	4.0	92.8	3.5	25.8	
2.30	.67	4.0	102.9	3.5	23.1	
2.22	.48	5.0	103.1	2.3	22.0	23.6
2.26	.82	5.0	93.4	2.2	24.8	
2.28	.34	5.0	101.5	2.3	23.0	
2.28	.67	5.0	94.7	2.2	24.6	

*This wire has a threshold of approximately 1.0 amperes.

TABLE 10 DELAY TIMES OF 3M8SB PYROFUZE BRAID*

Length of Braid (in.)	Resistance (ohms)	Current (amps)	Delay Time (millisec)	Calculated Ignition Time (millisec)	Linear Burning Rate (in/sec)	Average Linear Burning Rate (in/sec)
1.24	.196	3.0	101.5	46.3	22.5	19.8
1.28	.20	3.0	110.6	45.4	19.6	
1.30	.195	3.0	122.0	46.3	17.2	
1.24	.200	4.0	42.8	21.3	57.7	18.5+
1.30	.180	4.0	88.4	22.4	19.7	
1.30	.192	4.0	93.6	21.6	18.1	
1.32	.190	4.0	97.0	22.1	17.6	
1.30	.225	5.0	81.9	12.3	18.7	18.4
1.30	.180	5.0	84.4	13.0	18.2	
1.30	.190	5.0	82.8	12.8	18.6	
1.32	.250	5.0	85.5	12.1	18.0	
2.26	.340	3.0	157.8	34.9	18.4	19.2
2.26	.205	3.0	160.6	44.4	19.4	
2.28	.220	3.0	157.0	42.0	19.8	
2.30	.195	3.0	165.7	46.5	19.3	
2.22	.360	4.0	139.4	18.5	18.4	18.9
2.26	.260	4.0	136.2	19.6	19.4	
2.30	.160	4.0	147.5	24.2	18.7	
2.26	.275	5.0	137.7	11.9	18.0	18.9
2.28	.204	5.0	135.8	12.6	18.5	
2.30	.282	5.0	133.2	11.9	19.0	
2.32	.212	5.0	129.0	12.5	19.9	

+Obvious sporadic times are not averaged.
*This wire has a threshold current of approximately 1.5 amperes.

TABLE 11 DELAY TIMES OF 4M6SB PYROFUZE BRAID*

Length of Braid (in.)	Resistance (ohms)	Current (amps)	Delay Time (millisec)	Calculated Ignition Time (millisec)	Linear Burning Rate (in/sec)	Average Linear Burning Rate (in/sec)
1.24	.140	3.0	2,509.1	273.8	-	-
1.24	.116	3.0	2,738.7	1,476.3	-	-
1.28	.124	4.0	170.6	102.4	18.8	
1.28	.156	4.0	197.9	78.0	10.7	14.9
1.28	.110	4.0	204.2	133.0	18.0	
1.28	.119	4.0	226.3	110.4	11.0	
1.24	.150	5.0	123.5	44.3	15.7	
1.24	.160	5.0	130.9	43.0	14.1	
1.26	.140	5.0	127.1	46.0	15.5	14.4
1.28	.120	5.0	132.1	51.6	15.9	
1.30	.150	5.0	165.9	44.3	10.7	
2.26	.135	5.0	206.5	47.1	14.2	
2.28	.186	5.0	191.1	40.8	15.2	
2.28	.112	5.0	200.4	55.4	15.7	13.0
2.30	.150	5.0	283.2	44.3	9.6	
2.32	.142	5.0	269.1	45.7	10.4	
2.24	.152	6.5	108.2	23.7	26.5+	
2.32	.110	6.5	191.2	26.9	14.1	14.7
2.32	.163	6.5	180.2	23.3	14.8	
2.32	.120	6.5	178.8	25.7	15.2	

+Obvious sporadic time not averaged.
*This wire has a threshold current of approximately 2.5 amperes.

TABLE 12 DELAY TIMES OF 5M8SB PYROFUZE BRAID*

Length of Braid (in.)	Resistance (ohms)	Current (amps)	Delay Time (millisec)	Calculated Igntion Time (millisec)	Linear Burning Rate (in/sec)	Average Linear Burning Rate (in/sec)
1.24	.110	5.0	301.1	137.2	7.6	
1.24	.120	5.0	230.1	126.1	11.9	
1.26	.077	5.0	1202.1	364.0	1.5	5.9
1.28	.110	5.0	451.6	137.2	4.1	
1.30	.097	5.0	470.4	166.3	4.3	
1.24	.112	6.5	179.8	65.0	10.8	
1.24	.076	6.5	298.4	95.3	6.1+	
1.24	.113	6.5	184.7	69.9	10.8	11.3
1.26	.115	6.5	162.4	64.1	12.8	
1.26	.134	6.5	175.7	60.1	10.9	
2.24	.116	5.0	310.9	130.2	12.4	
2.26	.110	5.0	306.2	137.2	13.4	13.0
2.28	.097	5.0	575.8	166.3	5.6+	
2.30	.120	5.0	300.7	126.1	13.2	
2.24	.122	6.5	246.7	62.4	12.2	
2.24	.110	6.5	265.5	65.7	11.2	
2.26	.120	6.5	309.5	62.8	9.2	10.2
2.28	.098	6.5	325.3	73.4	9.1	
2.30	.091	6.5	321.4	75.6	9.4	

+Obvious sporadic time not averaged.

*This wire has a threshold current of approximately 3.25 amperes.

TABLE 13 DELAY TIMES OF 2M8SB PYROFUZE WITH DOUBLE GLASS INSULATION*

Length of Braid (in.)	Length of Insulation (in.)	Resistance (ohms)	Current (amps)	Delay Time (millisec)	Calculated Ignition Time (millisec)	Linear Burning Rate (in/sec)	Average Linear Burning Rate (in/sec)
1.24	1.20	.54	6.5	84.8	1.4	14.9	
1.30	1.10	.51	5.0	94.84	2.7	14.1	
2.24	1.84	.50	5.0	147.5	2.7	15.5	15.1
2.26	2.00	.40	5.0	160.9	3.1	14.3	
2.28	2.00	.42	5.0	151.2	3.0	15.4	

*This wire has a threshold current of approximately 1.0 amperes.

TABLE 14 DELAY TIMES OF 418SB PYROFUZE WITH DOUBLE GLASS INSULATION*

Length of Braid (in.)	Length of Insulation (in.)	Resistance (ohms)	Current (amps)	Delay Time (millisec)	Calculated Ignition Time (millisec)	Linear Burning Rate (in/sec)	Average Linear Burning Rate (in/sec)
1.24	1.06	.120	5.0	172.6	51.6	10.2	
1.24	1.10	.142	5.0	168.8	45.7	10.1	
1.26	1.16	.145	5.0	158.0	45.1	11.2	10.6
1.28	1.12	.125	5.0	186.7	49.9	9.4	
1.28	1.16	.140	5.0	158.6	46.0	11.4	
1.28	1.08	.146	5.0	161.5	45.0	11.0	
1.24	1.20	.126	6.5	156.1	25.2	9.5	
1.24	1.20	.116	6.5	147.5	26.2	10.2	
1.26	1.20	.146	6.5	153.4	24.0	9.7	
1.26	1.20	.129	6.5	143.5	25.0	10.6	10.3
1.26	1.20	.116	6.5	143.5	26.2	10.7	
1.28	1.18	.180	6.5	147.5	22.9	10.3	
1.28	1.18	.142	6.5	143.1	24.2	10.8	
2.24	2.00	.183	5.0	242.2	41.0	11.1	
2.26	2.20	.170	5.0	243.4	42.0	11.2	
2.26	2.06	.175	5.0	233.7	41.6	11.8	11.5
2.26	2.20	.145	5.0	250.2	45.1	11.0	
2.26	2.20	.135	5.0	241.6	47.1	11.6	
2.27	2.06	.137	5.0	234.5	46.7	12.1	
2.26	2.04	.132	6.5	218.3	24.8	11.7	
2.26	2.02	.150	6.5	222.2	23.8	11.4	
2.26	2.02	.149	6.5	226.7	23.8	11.1	11.4
2.26	2.04	.134	6.5	220.3	24.6	11.5	
2.26	2.12	.135	6.5	225.2	24.6	11.3	
2.26	2.02	.130	6.5	228.2	24.7	11.1	

*This wire has a threshold current of approximately 2.5 amperes.

TABLE 15 DELAY TIMES OF 5M8SB PYROFUZE WITH DOUBLE GLASS INSULATION*

Length of Braid (in.)	Length of Insulation (in.)	Resistance (ohms)	Current (amps)	Delay Time (millisec)	Calculated Ignition Time (millisec)	Linear Burning Rate (in/sec)	Average Linear Burning Rate (in/sec)
1.24	1.12	.125	5.0	250.9	121.7	9.6	
1.24	1.00	.122	5.0	278.9	123.5	8.0	
1.25	1.00	.125	5.0	318.8	121.7	6.3	7.4
1.28	1.10	.146	5.0	325.7	109.7	5.9	
1.28	1.00	.139	5.0	299.9	112.9	6.8	
1.28	1.04	.110	5.0	307.3	137.2	7.5	
1.22	1.00	.128	6.5	197.5	61.2	9.0	
1.24	1.02	.120	6.5	209.6	62.8	8.4	
1.24	1.02	.115	6.5	235.1	64.1	7.3	
1.26	1.10	.092	6.5	203.9	75.6	9.8	8.5
1.26	1.04	.094	6.5	233.0	73.4	7.9	
1.26	1.04	.103	6.5	210.6	68.4	8.9	
1.28	1.04	.083	6.5	237.2	83.6	8.3	
2.20	2.10	.146	5.0	380.9	109.7	8.1	
2.20	2.02	.124	5.0	357.1	121.7	9.3	
2.20	2.06	.110	5.0	345.9	137.2	10.5	9.0
2.22	2.00	.100	5.0	409.1	157.8	8.8	
2.24	2.02	.105	5.0	378.3	146.6	9.7	
2.26	2.02	.106	5.0	437.8	144.7	7.7	
2.20	2.00	.130	6.5	294.1	60.7	9.4	
2.20	2.00	.116	6.5	287.5	64.1	9.8	
2.20	2.04	.105	6.5	292.2	67.6	9.8	9.2
2.24	2.04	.116	6.5	329.1	64.1	8.5	
2.24	2.00	.150	6.5	314.3	58.1	8.7	
2.26	2.02	.110	6.5	309.6	65.7	9.3	

*This wire has a threshold current of approximately 3.25 amperes.

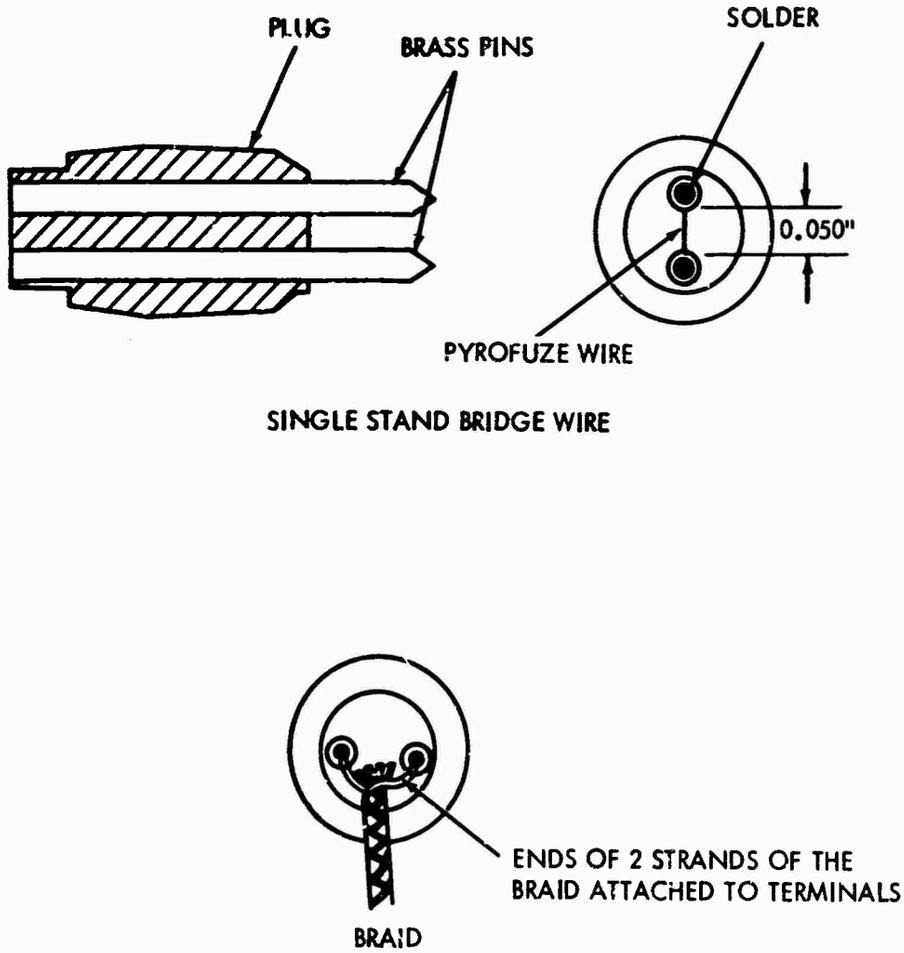

FIG. 1 BRIDGING METHODS FOR SINGLE STRANDS AND 8-STRAND BRAID

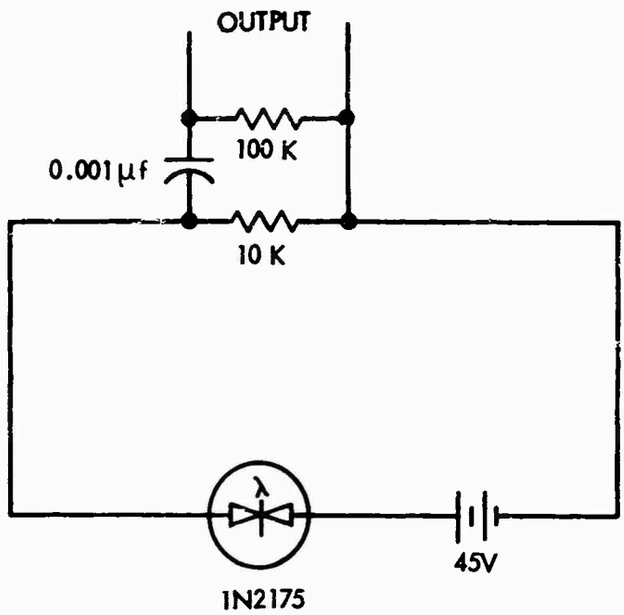

PHOTODIODE CIRCUIT

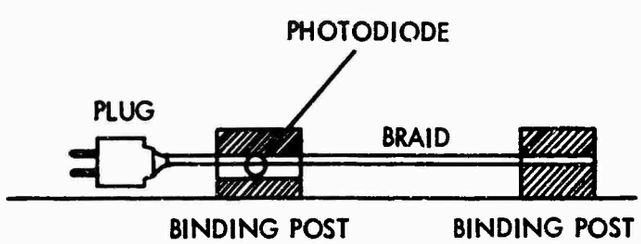

TIMING CIRCUIT FOR BRAID DELAY TIME

FIG. 2 TIMING CIRCUITS

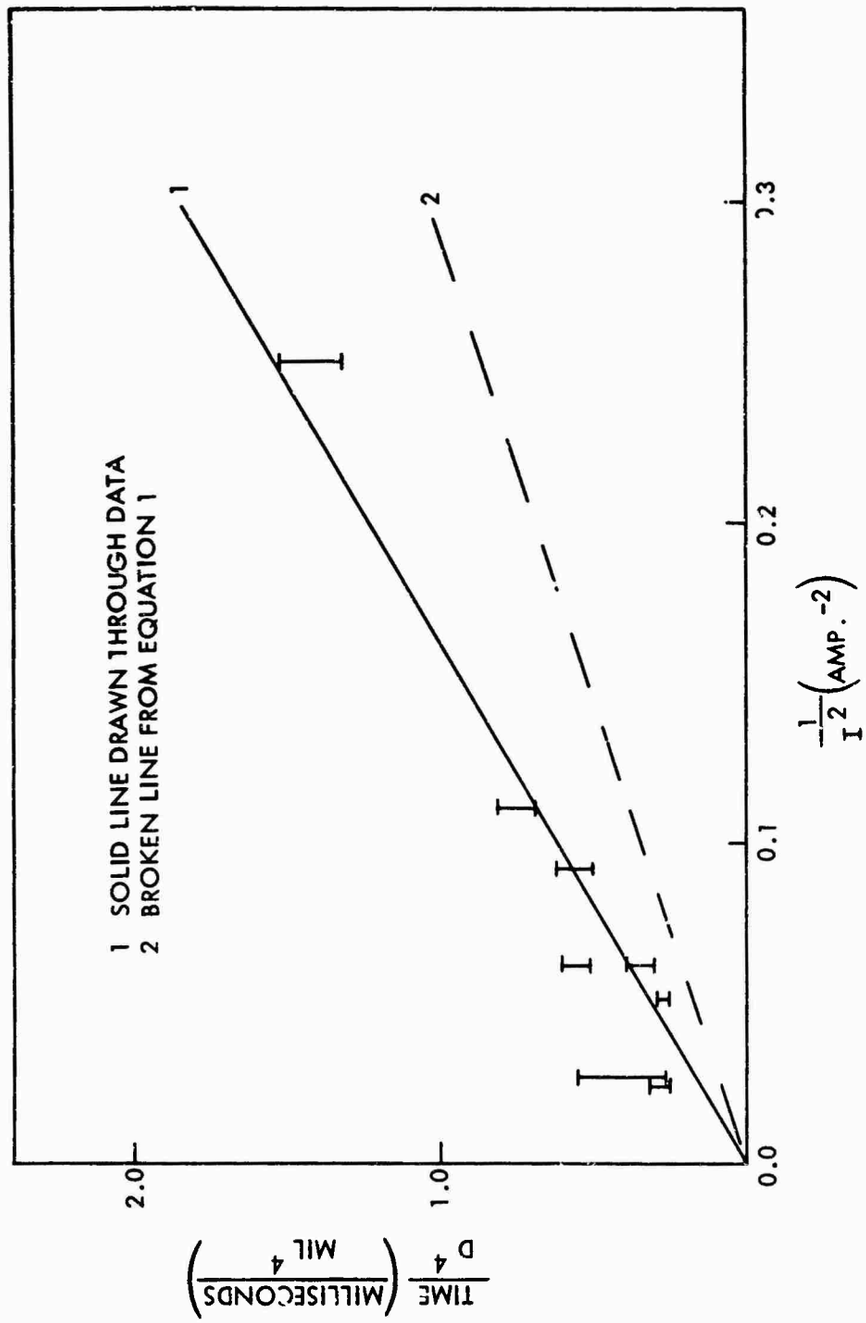

FIG. 3 IGNITION TIMES OF SINGLE STRAND PYROFUZE BRIDGEWIRES AS A FUNCTION OF DIAMETER AND CURRENT

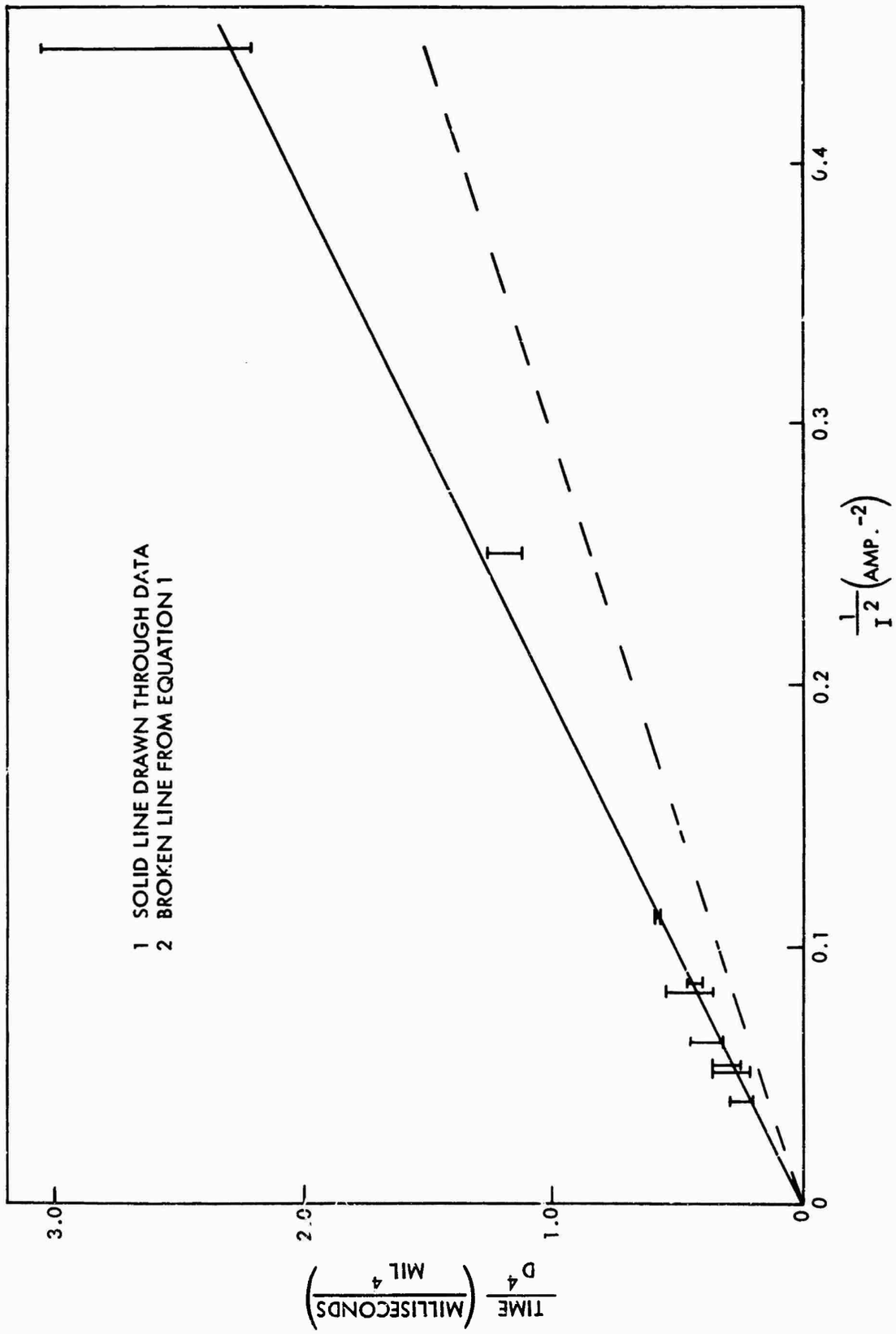

FIG. 4 IGNITION TIMES OF PYROFUZE BRAID AS A FUNCTION OF DIAMETER AND CURRENT

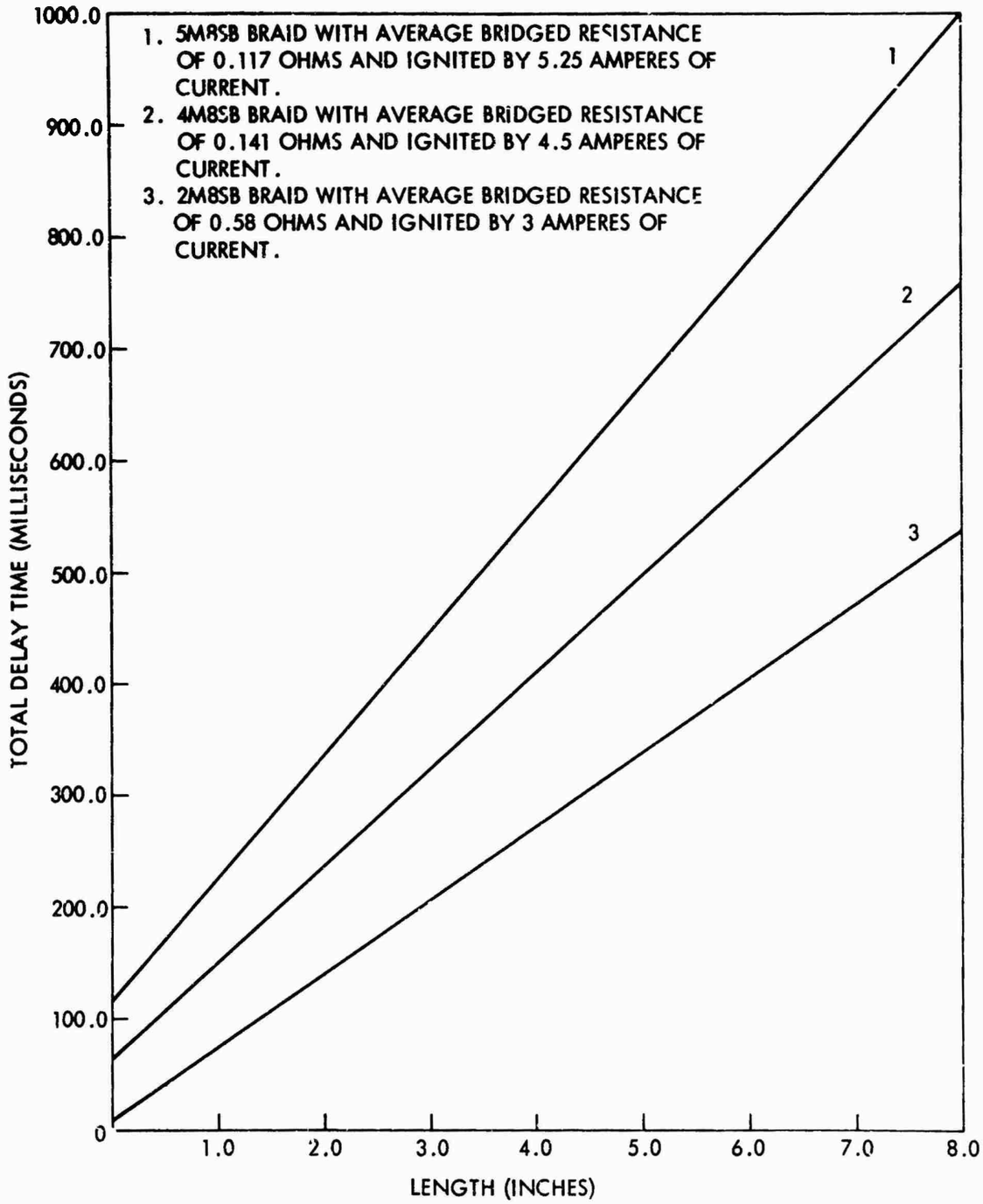

FIG. 5 TOTAL DELAY TIMES OF PYROFUZE BRAIDS WITH DOUBLE GLASS INSULATION AS A FUNCTION OF BRAID LENGTH

REFERENCES

1. W. R. Peterson, ASD-TDR-63-563, FA Report R-1693, prepared under AF MIPR 147886 by the Frankford Arsenal, Philadelphia, Pennsylvania (1963).

2. A. W. Smith and J. N. Cooper, The Elements of Physics, (McGraw-Fill Book Co., Inc., New York, 1957) p. 267.

3. G. Shortley and D. Williams, Principles of College Physics, (Prentice-Hall, Inc., 1959) p. 294-307, 665-666.

APPENDIX A

The derivation of Equation (1) depends upon simple classical theory of heat conduction and heating effect of a current in a wire[3]. The heating effect of an electric current is given by

$$W = I\,V\,t = I^2 R t$$

W = Total input energy in joules

I = Current in amps

V = Potential in volts (A-1)

R = Resistance in ohms

t = time in seconds

By making the assumptions that dissipative end effects and temperature gradients across the cross section can be neglected, determination of the heat necessary to raise the wires temperature to 660°C and melt the metal becomes possible. The equation is given by:

$$Q_{melt} = Q_1 + Q_2 + Q_3 = C_1 M_1 \Delta T + C_2 M_2 \Delta T + \ell_1 M_1 \qquad \text{(A-2)}$$

Q_1 = quantity of heat in joules necessary to raise aluminum to 660°C

Q_2 = quantity of heat in joules necessary to raise palladium to 660°C

Q_3 = quantity of heat necessary to melt aluminum

M = mass of metal (M_1 - aluminum, M_2 - palladium)

C = specific heat (C_1 - aluminum, C_2 - palladium)

ℓ = latent heat of fusion of aluminum

ΔT = change in temperature (T-20) necessary to melt aluminum

The conservation of energy allows the equating of Equations A-1 and A-2 which results in an expression relating time to heat and melt the wire to the wire properties.

$$I^2 R(T)\, t = C_1 M_1 \Delta T + C_2 M_2 \Delta T + \ell_1 M_1 \qquad \text{(A-3)}$$

To obtain a useful equation in terms of known quantities requires determination of the time averaged resistance and the masses of aluminum

and palladium. The mass of the aluminum core is by definition

$$M_1 = \frac{\rho_{al}\pi D_{al}^2 L}{4} = \frac{2.7\pi(0.556)\ (2.54)^3}{4} D_T^2 L_2 \qquad \text{(A-4)}$$

$$= 19.3\ D_T^2\ L$$

ρ_{al} = density of aluminum

D_{al} = diameter of aluminum core ($D_{al}^2 = 0.556\ D_T^2$ since manufacturer quotes a ratio of 1.25 of aluminum area to palladium area).

D_T = Total diameter of pyrofuze wire in inches

L = Length of wire in inches

a similar treatment gives the mass of the palladium as

$$M_2 = \text{mass palladium} = 68.5\ D_T^2\ L\ . \qquad \text{(A-5)}$$

The time to heat the wire up to the aluminum's melting temperature and the time necessary to melt the aluminum should be calculated separately because of the known temperature dependence of resistance. Equation A-3 can be split into two parts to calculate these two separate times.

$$I^2\ R_{20}\ (1 + \alpha\ \ \Delta\ T)\ t_H = C_1\ M_1\ \Delta T + C_2\ M_2\ \Delta T \qquad \text{(A-6)}$$

$$I^2 R_{660} t_m = I^2\ R_{20}\ (1 + \alpha\ 640)\ t_m = \ell_1 M_1 \qquad \text{(A-7)}$$

where $t = t_H + t_m$

t_H = time to heat wire to 660°C

t_m = time to melt wire at 660°C

t = total ignition time

R_{20} = resistance of wire at 20°C

α = temperature coefficient of resistivity of wire at 20°C ($\alpha^* = .0039$)

The time averaged resistance can be obtained from A-6 by solving for t_H at 660°C dividing by two and then finding the corresponding temperature.

*The same temperature coefficient of resistivity assumed for the Al and Pd.

$$t_{H_{660}} = \frac{K\Delta T}{1+\alpha\Delta T} = \frac{K(640)}{1+640(.0039)} = K\ (182.9)$$

$$\frac{t_{H_{660}}}{2} = K\ \frac{(182.9)}{2} = K\ (91.45)$$

$$\therefore \langle T \rangle_t = 162°C \text{ since } t_{H_{142}} = \frac{K\ (162-20)}{1+(162-20)(.0039)} = K\ (91.45) \qquad \text{(A-8)}$$

Equation A-6 can be represented by

$$I^2\ R_{20}\ (1+\alpha 142)\ t_H = I^2 R_{20}(1.56)\ t_H = C_1 M_1\ \Delta T + C_2 M_2\ \Delta T \qquad \text{(A-9)}$$

The ambient wire resistance can be expressed as a function of wire length and diameter squared resulting in the following expression.

$$R_{20} = \frac{L(10.3\text{x}10^{-6}\ \text{ohm-cm})}{(\pi/4)\ D^2}$$

$$= \frac{L(10.3\text{x}10^{-6}\ \text{ohm-cm})}{(\pi/4)(6.45\text{x}10^{-6}\text{cm}^2/\text{mil}^2)D^2\text{mil}^2} \qquad \text{(A-10)}$$

The final expression for time to heat the wire to ignition becomes a very simple expression in terms of the diameter of the pyrofuze wire and constant current passing through the wire.

$$t = t_H + t_m = 3.03\ \text{x}\ 10^{-3}\ \frac{D^4}{I^2} + 4.3\ \text{x}10^{-4}\ \frac{D^4}{I^2}$$

$$= 3.46\ \text{x}\ 10^{-3}\ \frac{D^4}{I^2} \qquad \text{(A-11)}$$

t = total time to heat wire to ignition in seconds.

D = diameter of pyrofuze wire in mils for convenience.

I = constant current in amperes.

APPENDIX B

Newton's law of cooling simply stated says that the energy lost due to conduction, convection, and radiation is all roughly proportional to the temperature difference. An exact calculation of dissipative effects is very difficult and beyond the intent of the author. By use of Newton's law of cooling, the available data, and a parallel treatment of a heating wire as done in Appendix A an equation can be obtained to describe the ignition times within 30% error.

The conservation of energy allows the expression

$$I^2 Rt = K \cdot (\text{mass}) + Ct \qquad \text{(B-1)}$$

where Ct is due to dissipative effects and from Equation 2, $C = \frac{K_3}{R}$

$$t = \frac{K \cdot (\text{mass})}{I^2 R - \frac{K_3}{R}} = \frac{K_1 \, LD^2}{I^2 R - \frac{K_3}{R}} = \frac{K_2 D^4}{I^2 - \frac{K_3}{R^2}} \qquad \text{(B-2)}$$

The constant K_2 can be calculated and for pyrofuze it has a value of 3.46 milliseconds-amp^2/mil^4. A least square fit of the data to Equation B-2 allows evaluation of K_3. The threshold current can be found from B-1 by solving for I^2.

$$I^2_{\text{threshold}} = \frac{K \cdot (\text{mass}) + Ct_{th}}{Rt_{th}} \qquad \text{(B-3)}$$

$$= \frac{K \cdot (\text{mass})}{Rt_{th}} + \frac{C}{R} = \frac{C}{R} - \frac{K_3}{R^2}$$

where I_{th} is the threshold current, t_{th} time it takes to heat to ignition with dissipative effects (i.e. $t_{th} \to \infty$), and R the ambient resistance. Equation B-3 should approximately describe the dissipative effects for various ranges of lengths and diameters of wire. The problem essentially is one of finding C as a function of wire parameters.

UNCLASSIFIED

Security Classification

DOCUMENT CONTROL DATA - R&D

(Security classification of title, body of abstract and indexing annotation must be entered when the overall report is classified)

1. ORIGINATING ACTIVITY *(Corporate author)* U. S. NAVAL ORDNANCE LABORATORY White Oak, Silver Spring, Maryland	2a. REPORT SECURITY CLASSIFICATION UNCLASSIFIED 2b. GROUP n/a

3. REPORT TITLE

Investigation of a Bimetallic Wire as a Millisecond Delay Element

4. DESCRIPTIVE NOTES *(Type of report and inclusive dates)*

n/a

5. AUTHOR(S) *(Last name, first name, initial)*

Jerry W. Forbes

6. REPORT DATE 4 January 1967	7a. TOTAL NO. OF PAGES 35	7b. NO. OF REFS 3

8a. CONTRACT OR GRANT NO. b. PROJECT NO. c. ORD-033-211/092-1/F008-08-11 d.	9a. ORIGINATOR'S REPORT NUMBER(S) NOLTR 66-91 9b. OTHER REPORT NO(S) *(Any other numbers that may be assigned this report)* n/a

10. AVAILABILITY/LIMITATION NOTICES

Distribution of this document is unlimited

11. SUPPLEMENTARY NOTES	12. SPONSORING MILITARY ACTIVITY Naval Ordnance Systems Command

13. ABSTRACT

A fuse wire composed of palladium and aluminum (pyrofuze) was investigated as a possible millisecond delay item. The single strand wire and the eight strand braid were both initiated by a constant current device.

Delay times of less than 30 milliseconds were obtained from single strand bridged pyrofuze wire, while delay times above 50 milliseconds were obtained from eight strand pyrofuze braid of one- and two-inch lengths. Variations of the delay times were less than 10% when the initiating currents were maintained at 2 amperes above the threshold currents. The delay times were dependent upon the input power, particularly for the very short delay times.

DD FORM 1 JAN 64 1473

UNCLASSIFIED

Security Classification

UNCLASSIFIED

Security Classification

14. KEY WORDS	LINK A ROLE	LINK A WT	LINK B ROLE	LINK B WT	LINK C ROLE	LINK C WT
Millisecond delay element						
Fuses						

INSTRUCTIONS

1. ORIGINATING ACTIVITY: Enter the name and address of the contractor, subcontractor, grantee, Department of Defense activity or other organization *(corporate author)* issuing the report.

2a. REPORT SECURITY CLASSIFICATION: Enter the overall security classification of the report. Indicate whether "Restricted Data" is included. Marking is to be in accordance with appropriate security regulations.

2b. GROUP: Automatic downgrading is specified in DoD Directive 5200.10 and Armed Forces Industrial Manual. Enter the group number. Also, when applicable, show that optional markings have been used for Group 3 and Group 4 as authorized.

3. REPORT TITLE: Enter the complete report title in all capital letters. Titles in all cases should be unclassified. If a meaningful title cannot be selected without classification, show title classification in all capitals in parenthesis immediately following the title.

4. DESCRIPTIVE NOTES: If appropriate, enter the type of report, e.g., interim, progress, summary, annual, or final. Give the inclusive dates when a specific reporting period is covered.

5. AUTHOR(S): Enter the name(s) of author(s) as shown on or in the report. Enter last name, first name, middle initial. If military, show rank and branch of service. The name of the principal author is an absolute minimum requirement.

6. REPORT DATE: Enter the date of the report as day, month, year; or month, year. If more than one date appears on the report, use date of publication.

7a. TOTAL NUMBER OF PAGES: The total page count should follow normal pagination procedures, i.e., enter the number of pages containing information.

7b. NUMBER OF REFERENCES: Enter the total number of references cited in the report.

8a. CONTRACT OR GRANT NUMBER: If appropriate, enter the applicable number of the contract or grant under which the report was written.

8b, 8c, & 8d. PROJECT NUMBER: Enter the appropriate military department identification, such as project number, subproject number, system numbers, task number, etc.

9a. ORIGINATOR'S REPORT NUMBER(S): Enter the official report number by which the document will be identified and controlled by the originating activity. This number must be unique to this report.

9b. OTHER REPORT NUMBER(S): If the report has been assigned any other report numbers *(either by the originator or by the sponsor)*, also enter this number(s).

10. AVAILABILITY/LIMITATION NOTICES: Enter any limitations on further dissemination of the report, other than those imposed by security classification, using standard statements such as:

(1) "Qualified requesters may obtain copies of this report from DDC."

(2) "Foreign announcement and dissemination of this report by DDC is not authorized."

(3) "U. S. Government agencies may obtain copies of this report directly from DDC. Other qualified DDC users shall request through _____."

(4) "U. S. military agencies may obtain copies of this report directly from DDC. Other qualified users shall request through _____."

(5) "All distribution of this report is controlled. Qualified DDC users shall request through _____."

If the report has been furnished to the Office of Technical Services, Department of Commerce, for sale to the public, indicate this fact and enter the price, if known.

11. SUPPLEMENTARY NOTES: Use for additional explanatory notes.

12. SPONSORING MILITARY ACTIVITY: Enter the name of the departmental project office or laboratory sponsoring *(paying for)* the research and development. Include address.

13. ABSTRACT: Enter an abstract giving a brief and factual summary of the document indicative of the report, even though it may also appear elsewhere in the body of the technical report. If additional space is required, a continuation sheet shall be attached.

It is highly desirable that the abstract of classified reports be unclassified. Each paragraph of the abstract shall end with an indication of the military security classification of the information in the paragraph, represented as *(TS)*, *(S)*, *(C)*, or *(U)*.

There is no limitation on the length of the abstract. However, the suggested length is from 150 to 225 words.

14. KEY WORDS: Key words are technically meaningful terms or short phrases that characterize a report and may be used as index entries for cataloging the report. Key words must be selected so that no security classification is required. Identifiers, such as equipment model designation, trade name, military project code name, geographic location, may be used as key words but will be followed by an indication of technical context. The assignment of links, roles, and weights is optional.

UNCLASSIFIED

Security Classification