ARPA ORDER NO. 189-1

MEMORANDUM
RM-5153-ARPA
DECEMBER 1966

AD 646 593

HARDWARE AIDS FOR AUTOMATA DESIGN

Norman B. Reilly

DDC
RECEIVED
FEB 8 1967
C

PREPARED FOR:
ADVANCED RESEARCH PROJECTS AGENCY

The RAND Corporation
SANTA MONICA • CALIFORNIA

ARCHIVE COPY

AD

AMRA CR 66-05/7

AD 646196

AMRA CR 66-05/7

CENTER FOR HIGH ENERGY FORMING

SIXTH QUARTERLY REPORT

OF TECHNICAL PROGRESS

G. A. Thurston

January 1, 1967

U. S. Army Materials Research Agency
Watertown, Massachusetts 02172

Martin Company
A Division of Martin Marietta Corporation
Contract DA 19-066-AMC-266(X)
The University of Denver
Denver, Colorado

Sponsored by

Advanced Research Projects Agency

ARPA Order No. 720

FEB 6 1967

Distribution of this document is unlimited.

ARCHIVE COPY

MEMORANDUM
RM-5153-ARPA
DECEMBER 1966

HARDWARE AIDS FOR AUTOMATA DESIGN

Norman B. Reilly

This research is supported by the Advanced Research Projects Agency under Contract No. SD-79. Any views or conclusions contained in this Memorandum should not be interpreted as representing the official opinion or policy of ARPA.

DISTRIBUTION STATEMENT
Distribution of this document is unlimited.

The RAND Corporation
1700 MAIN ST • SANTA MONICA • CALIFORNIA • 90406

PREFACE

This Memorandum describes progress in the design and construction of hybrid computing hardware for experimentation with neural nets.

The primary aim of the overall project--conducted for the Advanced Research Projects Agency--is to mimic observed gross behavioral activity of neurophysiological systems, with the hope of exhibiting elementary motivated behavioral patterns.

SUMMARY

This Memorandum presents hardware designed to provide basic building blocks from which large general neural networks can be constructed.

An introduction discusses the relationship of such constructions to automata theory and their possible usefulness in the building of neural nets. In the main body of the text, a simple network is constructed, containing by way of example at least one representative of each of five basic types of circuits. Also included is information on the logical properties of the building blocks. An Appendix gives detailed descriptions of the required circuitry and control functions.

CONTENTS

PREFACE iii

SUMMARY v

FIGURES ix

Section
INTRODUCTION 1

GENERAL DESIGN PRINCIPLES 4

LOGICAL PROPERTIES OF BUILDING BLOCKS 5
1) Threshold Circuits 5
2) Transfer Circuits 7

Appendix
DETAILED DESCRIPTION OF CIRCUITRY 15
Threshold Circuit 18
Reinforcer Circuit 18
Facilitation Circuit 18
Learner Circuit 22
Probability Circuit 23
Control Circuitry 26

REFERENCES 29

FIGURES

Figure

1. Threshold Circuit 6
2. Reinforcer Circuit 8
3. Facilitation Circuit 9
4. Learner Circuit 10
5. Probability Circuit 11
6. Neural Net Design Study 12
7. Waveform Example 14
8. Threshold Circuit 19
9. Reinforcer Circuit 20
10. Facilitation Circuit 21
11. Learner Circuit 24
12. Probability Circuit 25
13. Control Circuit 27

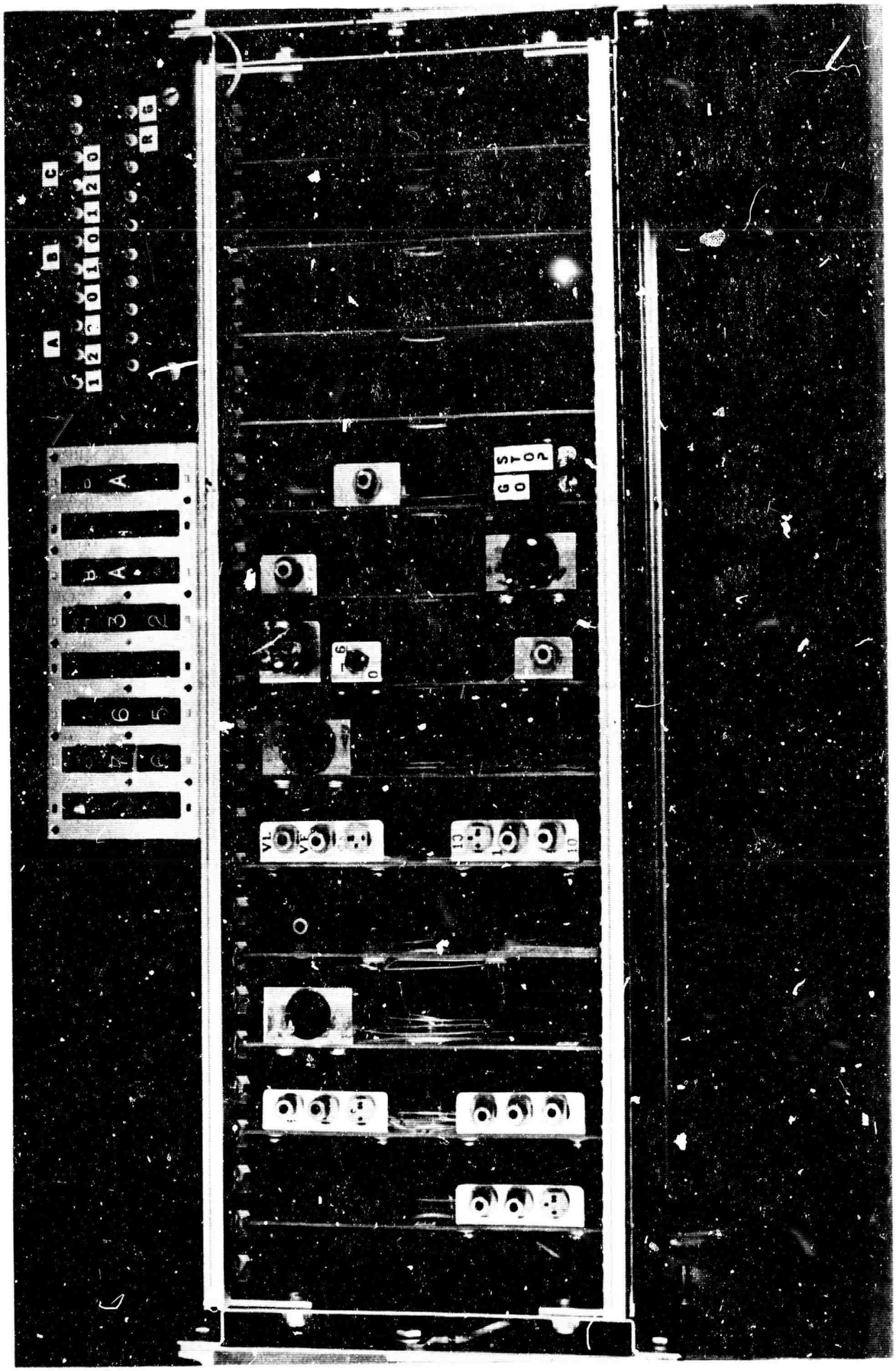

Frontispiece

HARDWARE AIDS FOR AUTOMATA DESIGN

INTRODUCTION

Among the fundamental efforts toward a logical description of neuron-like elements are the works of Kleene [1] and von Neumann [2], both following the basic paper of McCulloch and Pitts [3].

Kleene reviews the McCulloch-Pitts concept of a nerve net constructed of elementary neurons. In this scheme, a neuron consists of a body, or soma, from which axons lead to one or more end bulbs. A nerve net is an arrangement of both "input" and "inner" neurons, where any given axon impinges on not more than one other cell body, and where each synapse is either excitatory or inhibitory. With these building blocks, one can perform such operations as logical conjunction and disjunction, and also work with delays. Kleene thoroughly discusses the representability of events and concepts of finite automata.

Von Neumann discusses problems of automata synthesis and emphasizes the role of error in the physical implementation of probabilistic logics.

Harmon and Lewis [4] have recently given a definitive review of neural modeling intended to more exactly represent physiological phenomena.

While such discussions are important and necessary, a knowledge of the logical properties of individual elements, or small groups of elements, is often of limited value in the synthesis of large-scale* automata designed

*By "large-scale automata" is meant a network comprised of a large number of elements where each element performs one of a small number of functions.

to show explicitly input/output behavior. That is, a description of the psychology, or gross behavior, of an automaton is often only distantly related to a description of its neurophysiology. Therefore, when constructing large-scale automata, one must usually first synthesize by constructing trial interconnections between his chosen building blocks, then analyze the behavior of his construction--in essence, a "synthesis by analysis." The initial selection of connections rarely models the desired input/output behavior. This process, however, may reveal ways to improve the circuitry in the next iteration.

Evidently, formal graphical or tabular algorithms are needed to describe routines for the synthesis of automata on a behavioristic level. Such algorithms may be long coming, if indeed at all, despite a designer's intuition--when constructing automata with pencil and paper--that he is calling upon a describable, finite set of conceptual operations.

This Memorandum takes a less sophisticated but realizable approach--concentrating on the acceleration of the analysis portion of the "synthesis by analysis" routine. This is, admittedly, a concession; however, any scheme providing a more immediate reaction to the manipulations of the designer should materially minimize interruptions during pursuit of design goals. No such scheme or device is currently in use (which may partially account for the lack of understanding of the problem-solving capabilities of automata, or more generally, about information flow in parallel systems).

The basic motivation for the circuits described here is provided by Paxson, who offers the following comments:

> . . . a new experimental tool is needed. Simulation of neural nets on a digital computer is inefficient. The serial computation of a structure of parallel operations is expensive in preparation and execution times. Nor is any use made of the arithmetic precision inherent in the digital computer--it is actually inappropriate. Finally, the turnaround time to change parameters and analyze the consequences is excessive--four to twenty-four hours, and much expensively produced paper is wasted. Coupling between experimenter and computer is not close enough.
>
> Special purpose analogue equipment is needed. A particular net should be set up and modified on this equipment under the experimenter's own hands. Components should reproduce the behavior described in the section above on neural nets, and would not resemble closely past neuromimes (TAYLOR, HARMON) that were designed to reproduce spike trains and simulate other features of real neurons. We hope to investigate the design of such equipment.*

A discussion of the circuit design will be presented in three parts:

1) General design principles;
2) Logical properties of the building blocks;
3) A detailed description of the actual circuitry (Appendix).

---

*Ref. 5, p. 47.

GENERAL DESIGN PRINCIPLES

The system contains a mixture of analog and digital characteristics. Threshold logic circuits have analog inputs and digital outputs. A second class of circuits, having digital inputs and analog outputs, defines how signals are altered in transit from one threshold circuit to another. The analog information in circulation, altered at discrete time intervals, produces staircase waveforms. A problem is run over a number of time intervals set into the machine by the operator. The machine operates in a repetitive mode similar to current analog computing, which continually displays the solution. Thus, if the interval counter is set to run n time units, the problem will run through n time units, the entire system is then reset, and the problem is run again through n time units, etc. This operation continues until interrupted by the operator, who stops the system or resets n to a new value.

The system's basic timing is delivered to the control circuitry by a pulse generator or clock set to provide a 1 kc square wave signal. The control circuitry monitors the presentation of clock pulses to the network and resets the problem run at the appropriate intervals.

Tapping into a shift register at the desired interval achieves delay of the signal pulse propagated in a particular circuit (the transit time from point to point). Since the shift register derives its commands from the clock, the delay of a given signal is always an integral multiple of clock periods or system time units (see Appendix).

The circuits themselves represent an abstraction of gross neurophysiological observations. For example, rectangular pulses and ramp pulses, whose durations are proportional to firing periods, replace the normal "sequence of spikes" representation in neural nets.

The most convenient output appears to be a multi-trace scope where one can display the entire history of the problem at selected points in the net.

Components and circuitry are mounted on module cards and housed in a 19 in. cage (see Frontispiece). The intermodule wiring is done on connector pins at the rear of the cage. Next-generation construction may use physically smaller building blocks allowing units to be patched on a large plugboard, thus preserving network topology. Controls for parameter settings are mounted on the ends of the cards; the interval counter switch and circuit test points are at the top of the cage.

LOGICAL PROPERTIES OF BUILDING BLOCKS

The design involves the interconnection of two basic kinds of functional circuits:

1) Threshold Circuits

a) Type I--In this type of threshold circuit (Fig. 1), the digital output is "1" when the sum of all analog inputs exceeds an arbitrary threshold and "0" at all other times.

b) Type II--This type of threshold device fires at an arbitrary setting, but sustains firing until the sum of inputs drops below a second arbitrary lower threshold.

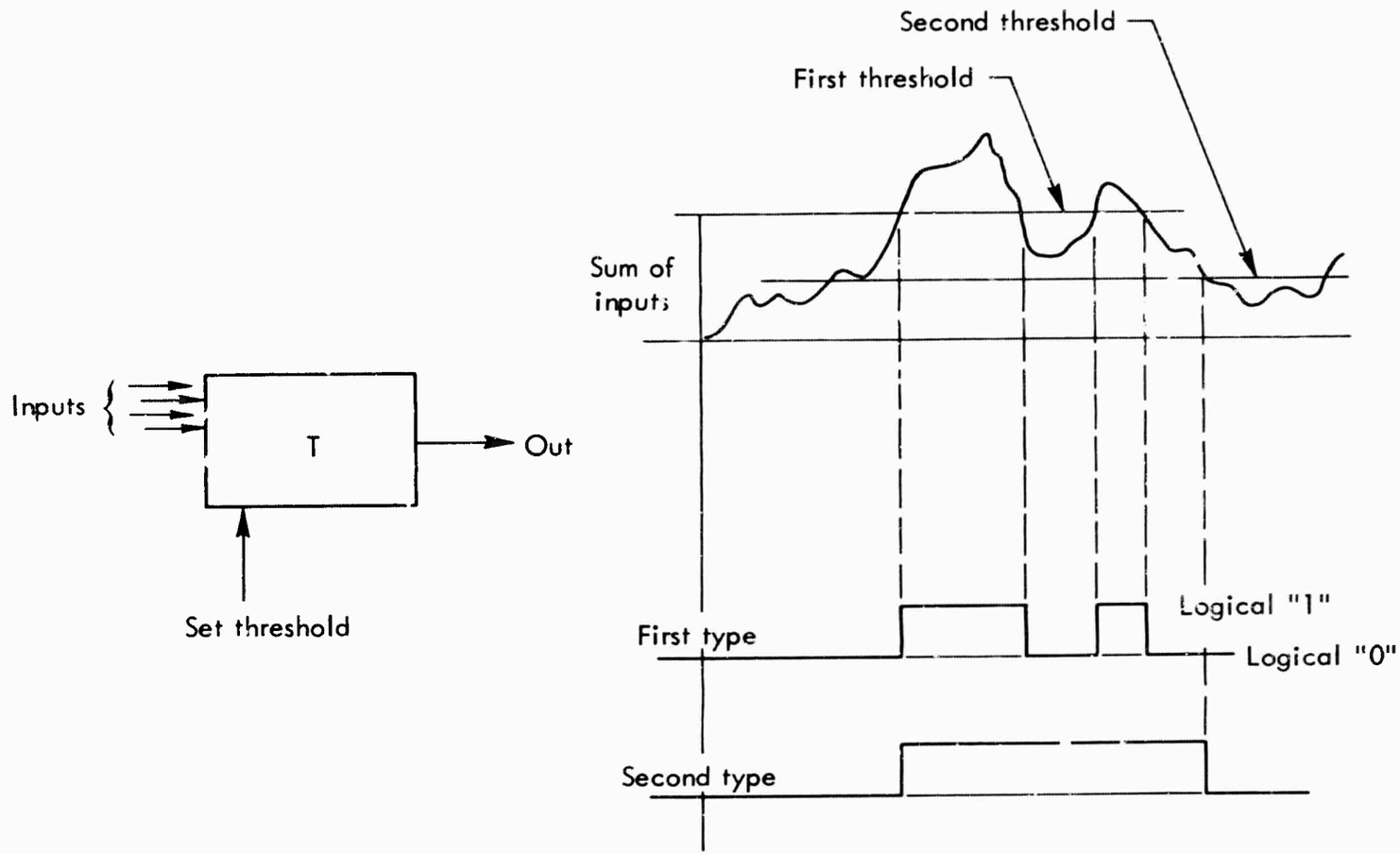

Fig. 1 — Threshold circuit

2) Transfer Circuits

These circuits determine how waveforms are altered while in transit from one threshold circuit to the next. There are four kinds of transfer circuits:

a) R Circuit (Reinforcer)--Generates a rectangular pulse with adjustable amplitude and delay when the digital input is a "1" (Fig. 2).

b) F Circuit (Facilitation)--Generates a sloping voltage representing facilitation with an adjustable initial value, final maximum value, and delay when the input is "1" (Fig. 3).

c) L Circuit (Learner)--Learning occurs only during periods when both the learning synapse and a reinforcing synapse are active (Fig. 4). Between periods of reinforcement, the voltage contributed by the learner (or which would be contributed if its parent cell were firing) decays exponentially to become an asymptote, once the latter has been exceeded. Learned synapses do not reset. Memory of the learning synapse status is maintained in the computation so that, upon new reinforcement, the learner voltage starts at its current value, provided its parent cell is firing.

d) P Circuit (Probability)--Generates an output which has an adjustable amplitude and an adjustable probability (P) of occurring when the input is "1" (Fig. 5). The probability, P, of an output, A, occurring is determined by sampling a random process at discrete time intervals governed by the clock (see Appendix).

All of the above circuits have been constructed from Fairchild integrated circuit components, and connected so as to mimic the behavior of the simple demonstration neural net outlined by Paxson [5] (Fig. 6). Circuits A, B, and C are threshold circuits, arbitrarily set at 10 units.

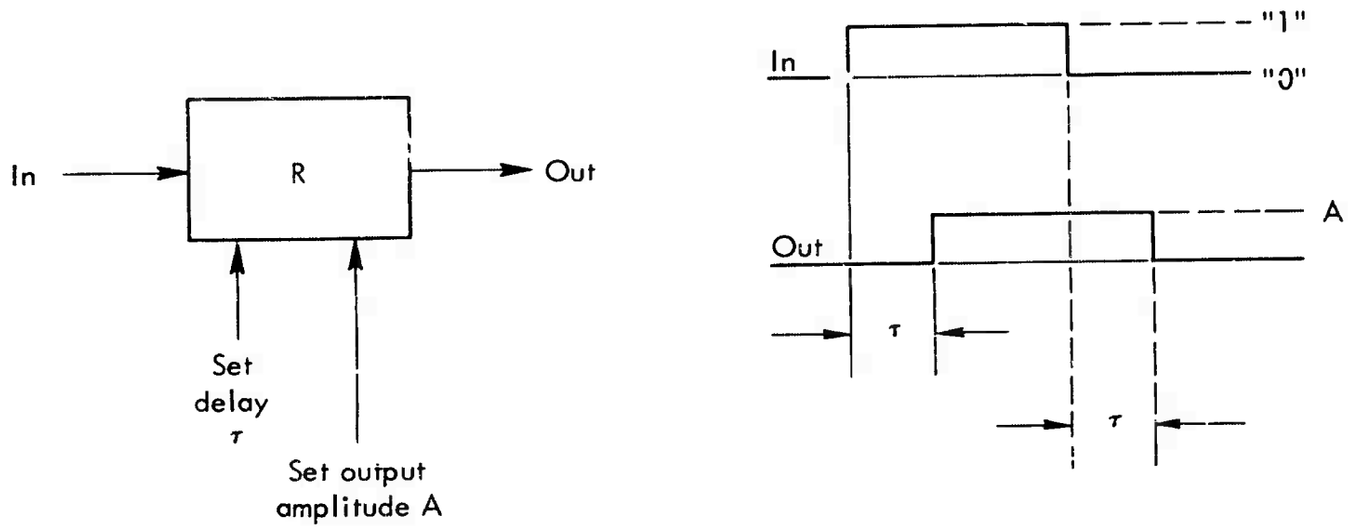

Fig. 2 — Reinforcer circuit

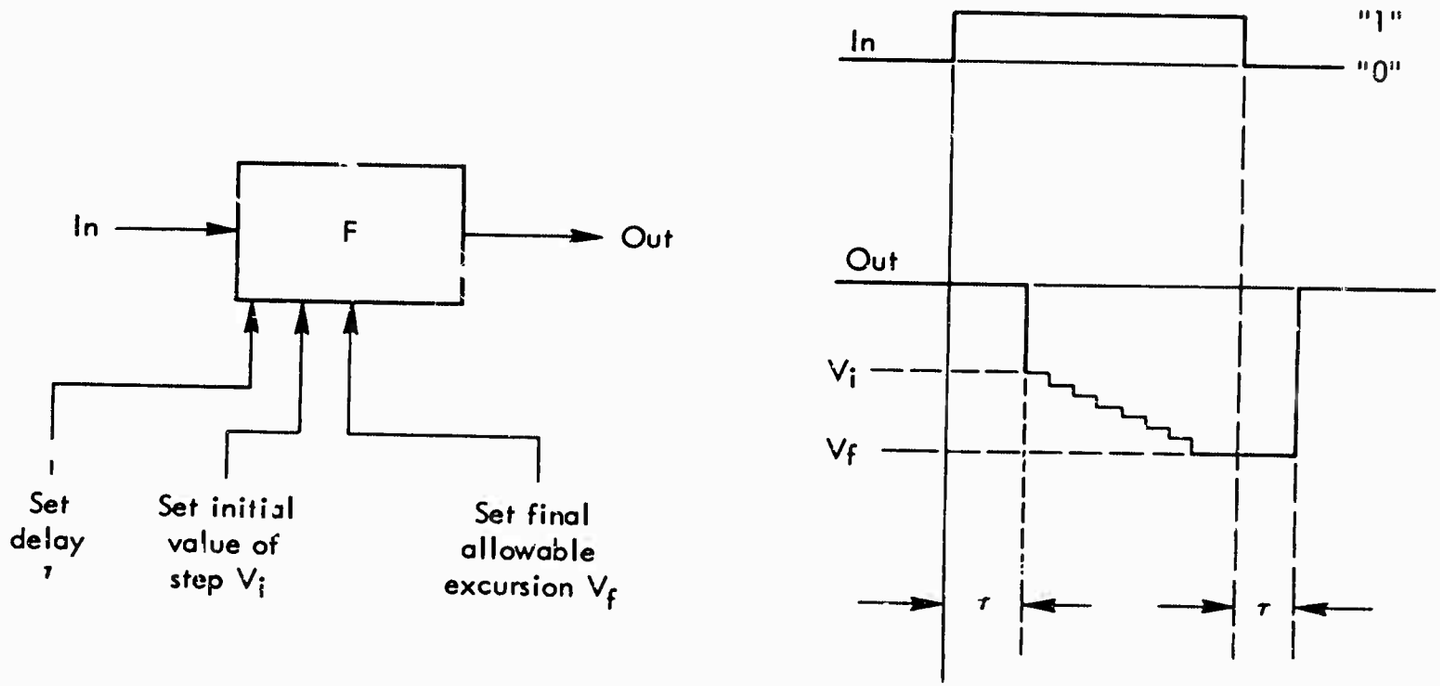

Fig. 3 — Facilitation circuit

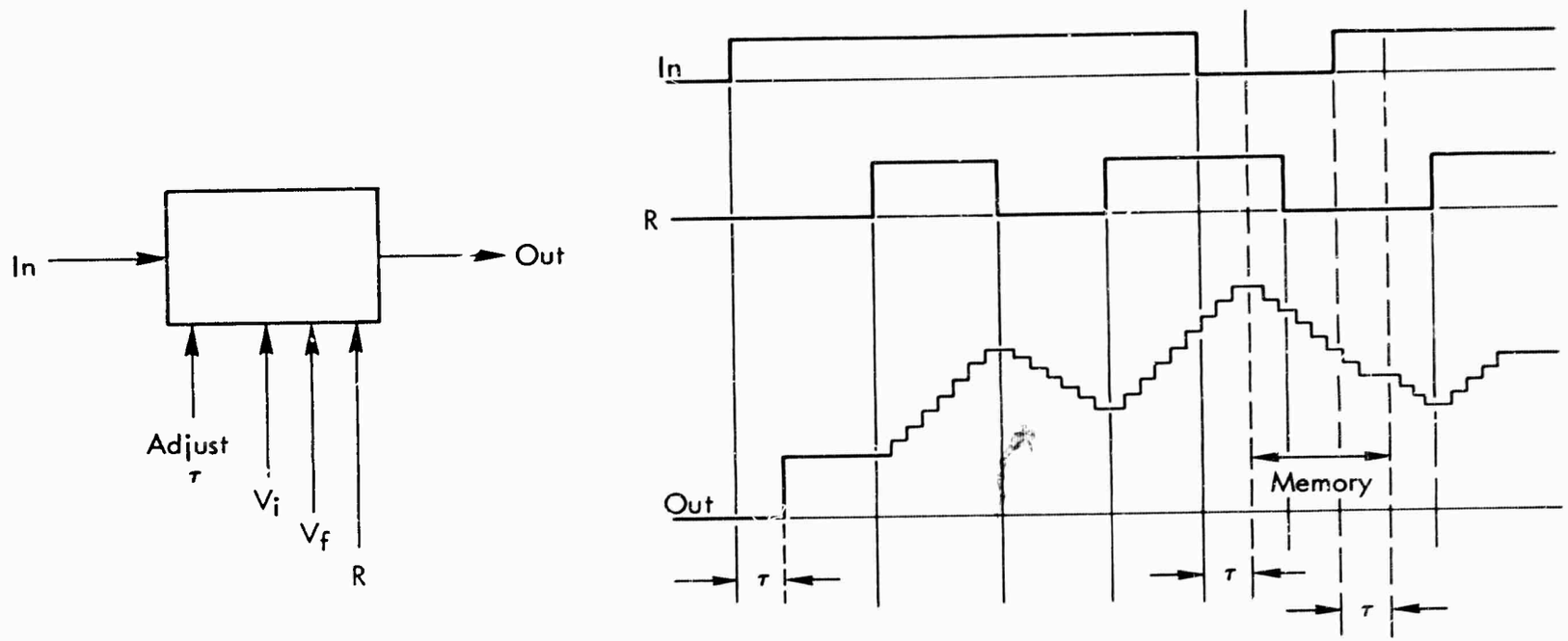

Fig. 4 — Learner circuit

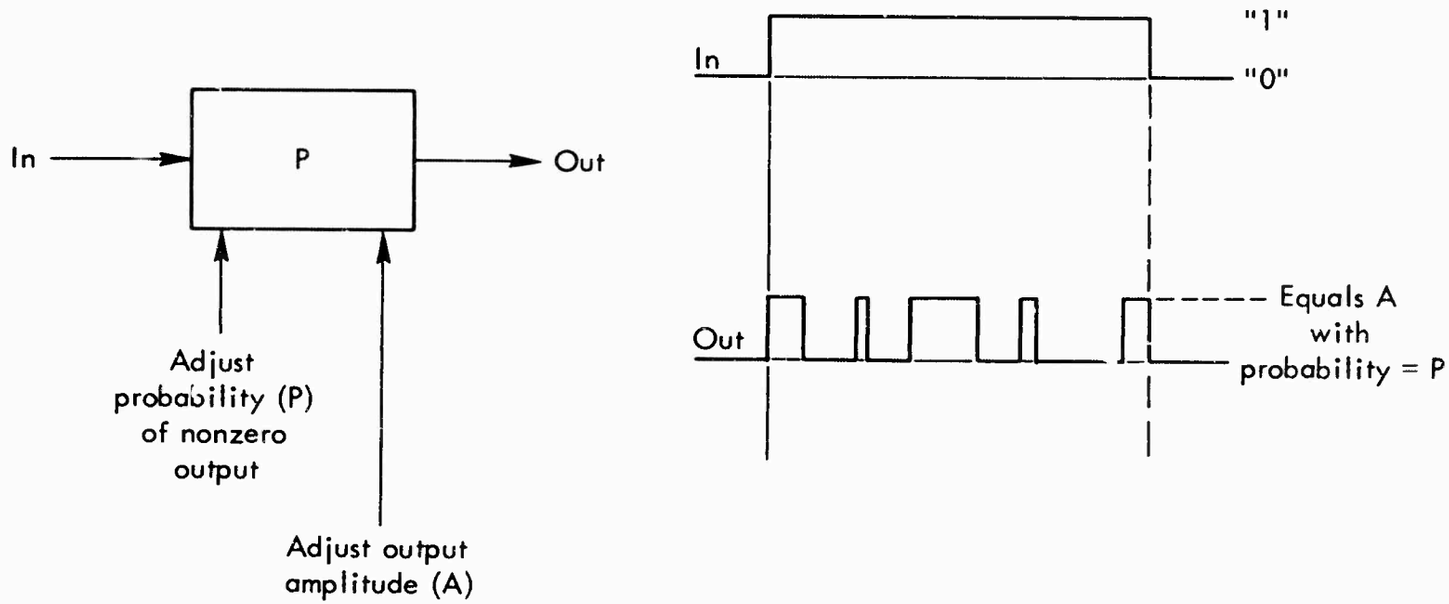

Fig. 5 — Probability circuit

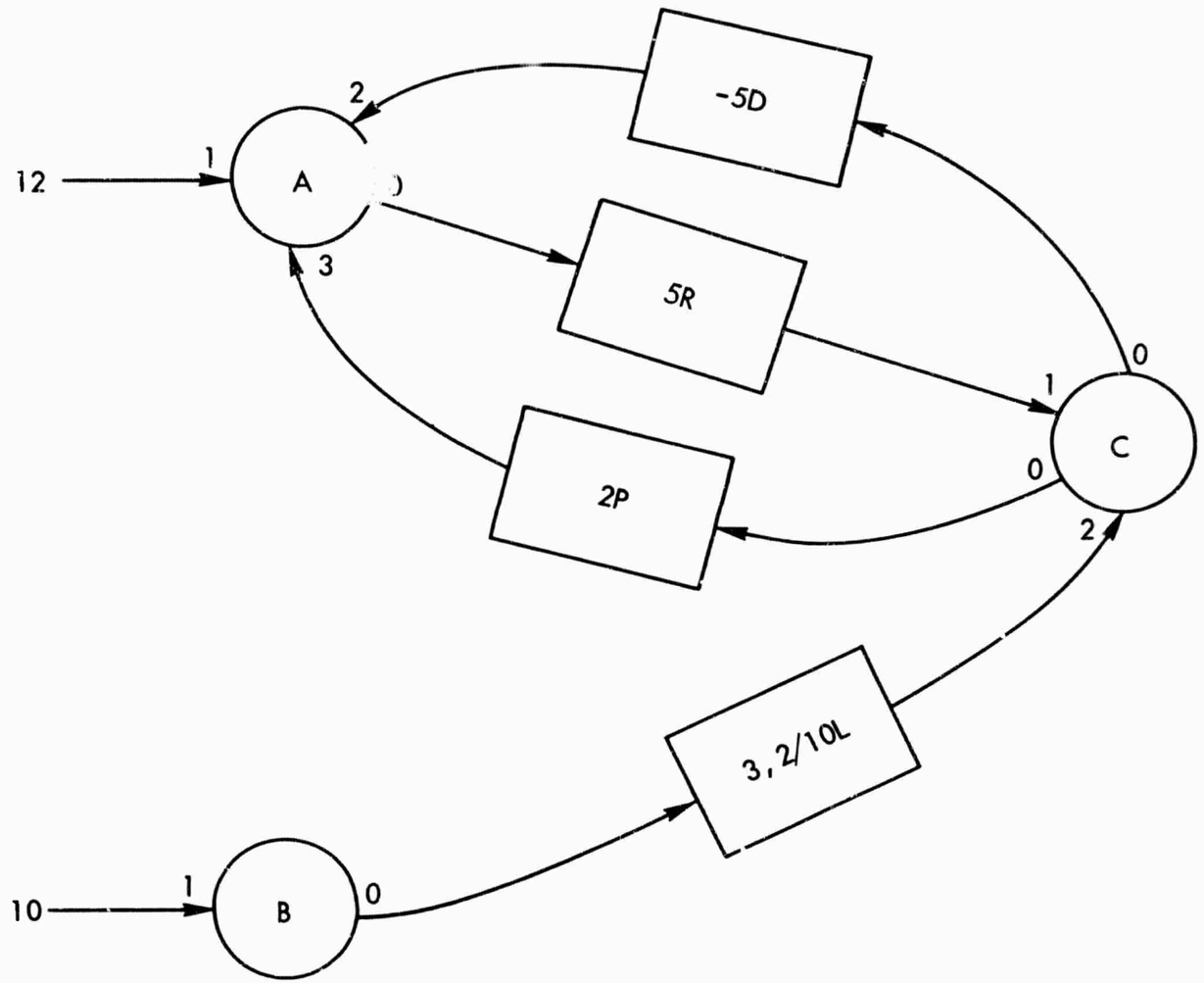

Fig. 6 — Neural net design study

The notation 3,2/10 L in Fig. 6 represents a learner circuit with the delay or transit time $\tau = 3$, initial voltage $V_i = 2$ and final voltage $V_f = 10$. The notation 2P indicates that an amplitude of two units will occur with probability P. The notation 5R stands for a reinforcer with unit delay ($\tau = 1$) and an amplitude of 5. The notation -5D represents a defacilitation (negative facilitation) circuit with $V_i = 0$, $\tau = 1$ and a $V_f = -5$ units.

The waveforms shown in Fig. 7 indicate the voltage-time relationships exhibited by the various circuits for the one prescribed set of values for threshold, delay, amplitude, initial and final value, and decay settings. (Details of schematic operation are discussed in the Appendix.)

On-line graphical facilities may also prove a useful approach to "synthesis by analysis" operations. For example, naming and recall of substructures, useful for recalling operations previously carried out, may be more easily realized with digital machinery (assuming availability of sufficient space). However, the principle advantage of the present hardware approach lies in its high speed and consequent uninterrupted interaction between operator and design tool.

Further, this design has enabled us to specify required circuitry in terms of current technology, and should serve as a guide in future discussions of specific forms of automata design aids.

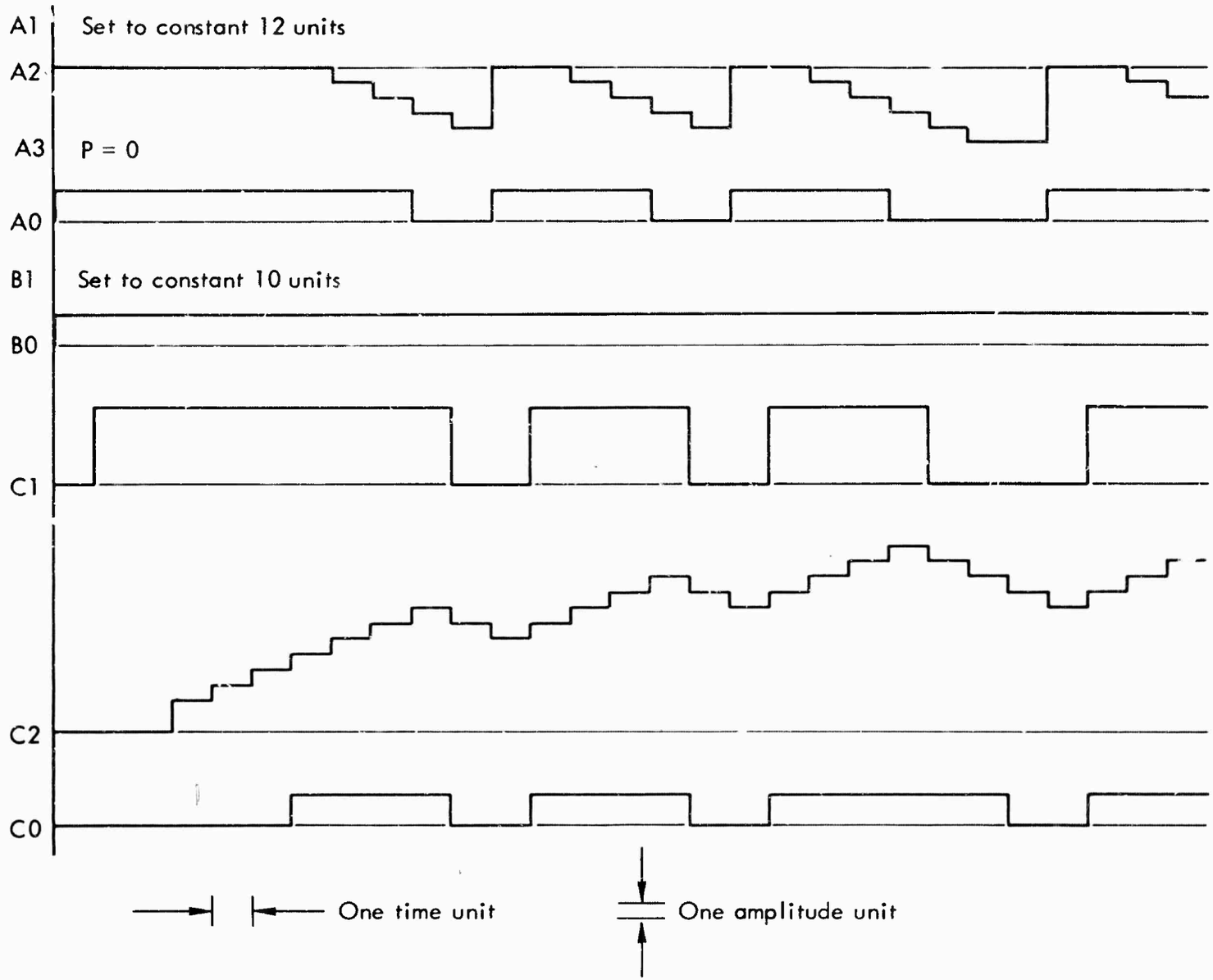

Fig. 7 — Waveform example

Appendix

DETAILED DESCRIPTION OF CIRCUITRY

Five basic types of Fairchild micrologic integrated circuits are employed:

1) The 710 comparator circuit has an output of "1" (+3 volts) when the input, Pin 2, is greater in magnitude than the analog input, Pin 3.

710 Comparator

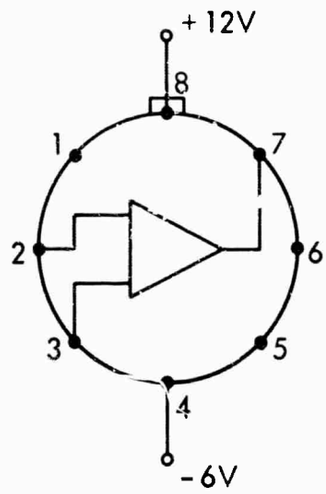

2) The 914 dual nand gate package consists of two 2-input nand gates whose connections are shown. For example, the output at Pin 7 is contingent upon the input values at Pins 1 and 2, as shown in the following table:

Pin 1	Pin 2	Pin 7
0	0	1
0	1	1
1	0	1
1	1	0

914 Dual nand gates

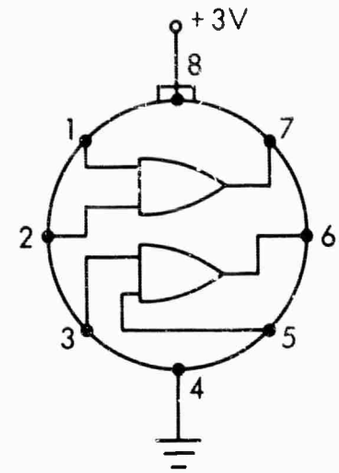

3) The 923 J-K flip-flop has set and clear inputs at Pins 1 and 3, respectively, and set and reset outputs at Pins 6 and 5, respectively. For example, the output at Pin 7 (at time n+1) is contingent upon the inputs at Pins 1 and 3 (at time n), in accordance with the following table:

Pin 1	Pin 3	Pin 7
1	1	remain unchanged
1	0	1
0	1	0
0	0	change to opposite state

923 JK flip flop

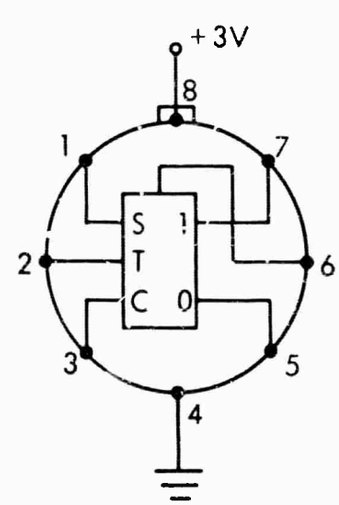

4) The Fairchild 702 is a high-gain, wideband amplifier used as an operational amplifier with inputs on Pins 2 and 3 and output at Pin 7.

702 Operational amplifier

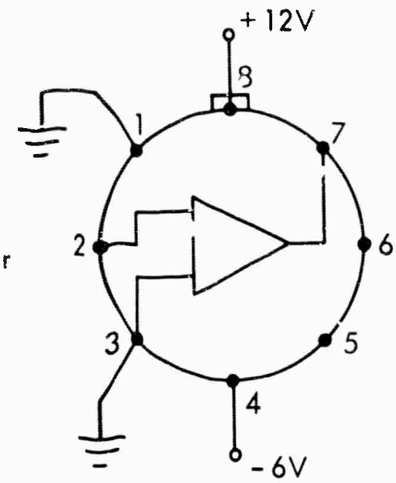

5) The 900 is a buffer element used when driving a large number of circuits (i.e., when large current requirements exist). Input and output connections are at Pins 3 and 5, respectively.

900 Booster

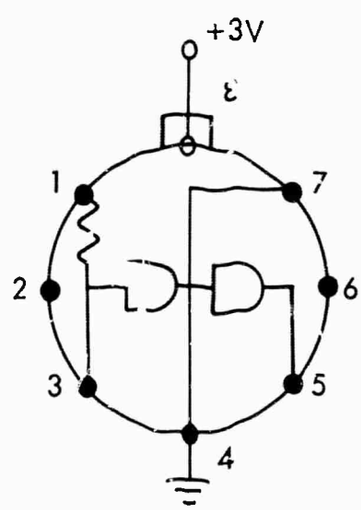

THRESHOLD CIRCUIT

The threshold circuit (Fig. 8) is formed with a 710 comparator and 914 gates. Input voltages are summed across the input resistors and presented as one input to the comparator. The second comparator input (Pin 2) is an adjustable voltage (see 1K potentiometer) which controls the threshold of the device. The 10K feedback resistor from Pins 7 to 2 of the 710 unit minimizes hysteresis. The 914 gates provide both output drive and a method for gating off the output during reset time after the running of each problem cycle.

REINFORCER CIRCUIT

The basic delay function in the reinforcer circuit (Fig. 9) is achieved by tapping off the desired delays at different points of a shift register. Delays of up to four time units are provided by four 923 flip-flops. The required "true" and complementary data inputs for the four-stage shift register are provided by a 914 gate. The system clock advances the register. The resistor-transistor network (shown at the bottom of Fig. 9) then adjusts amplitude of the delayed function.

FACILITATION CIRCUIT

The delay in the facilitation circuit is achieved in the same way as in the reinforcer circuit. The shift register is illustrated at the bottom of the schematic in Fig. 10. The 702 is connected as a summing integrator,

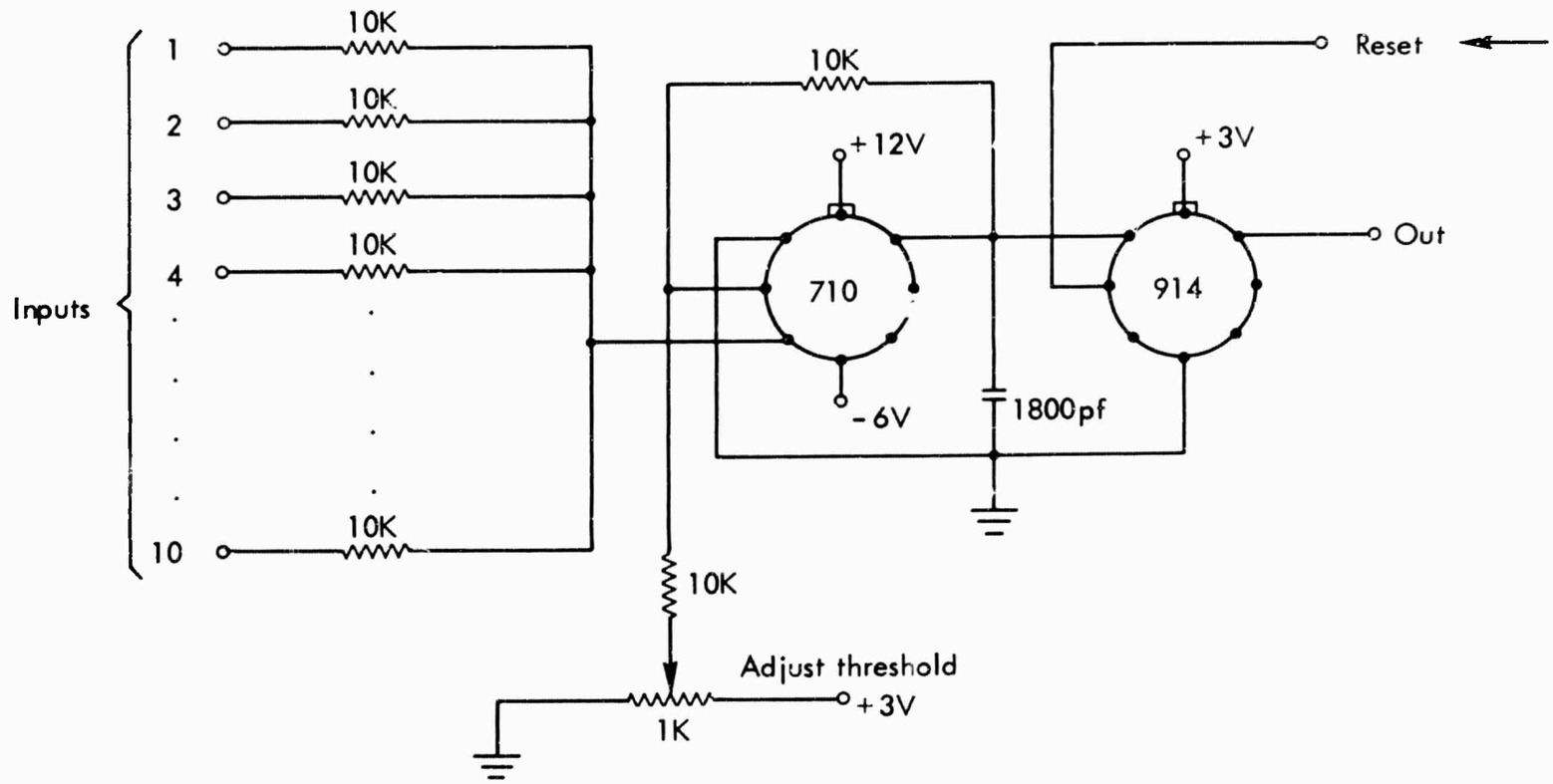

Fig. 8 — Threshold circuit

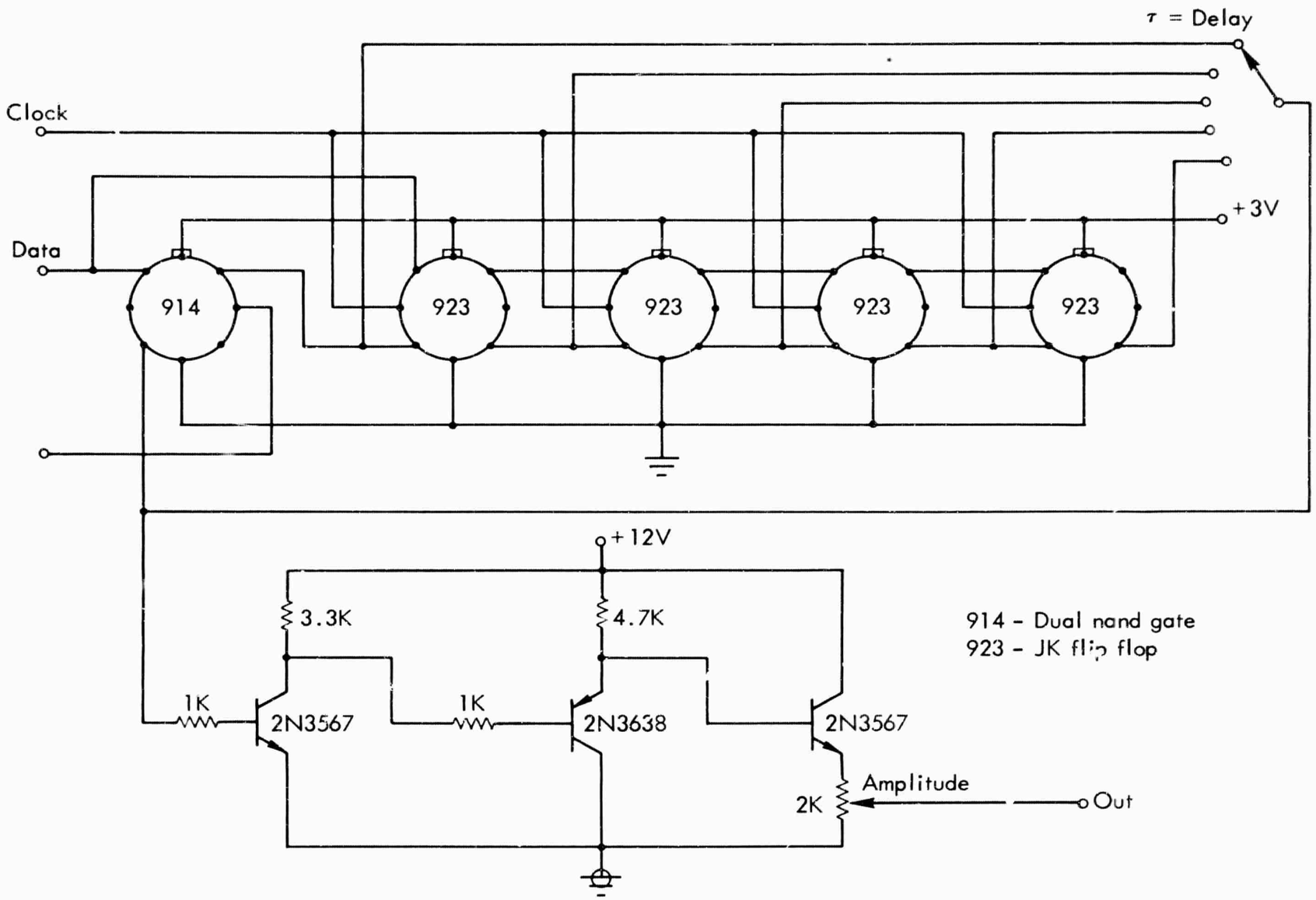

Fig.9 — Reinforcer circuit

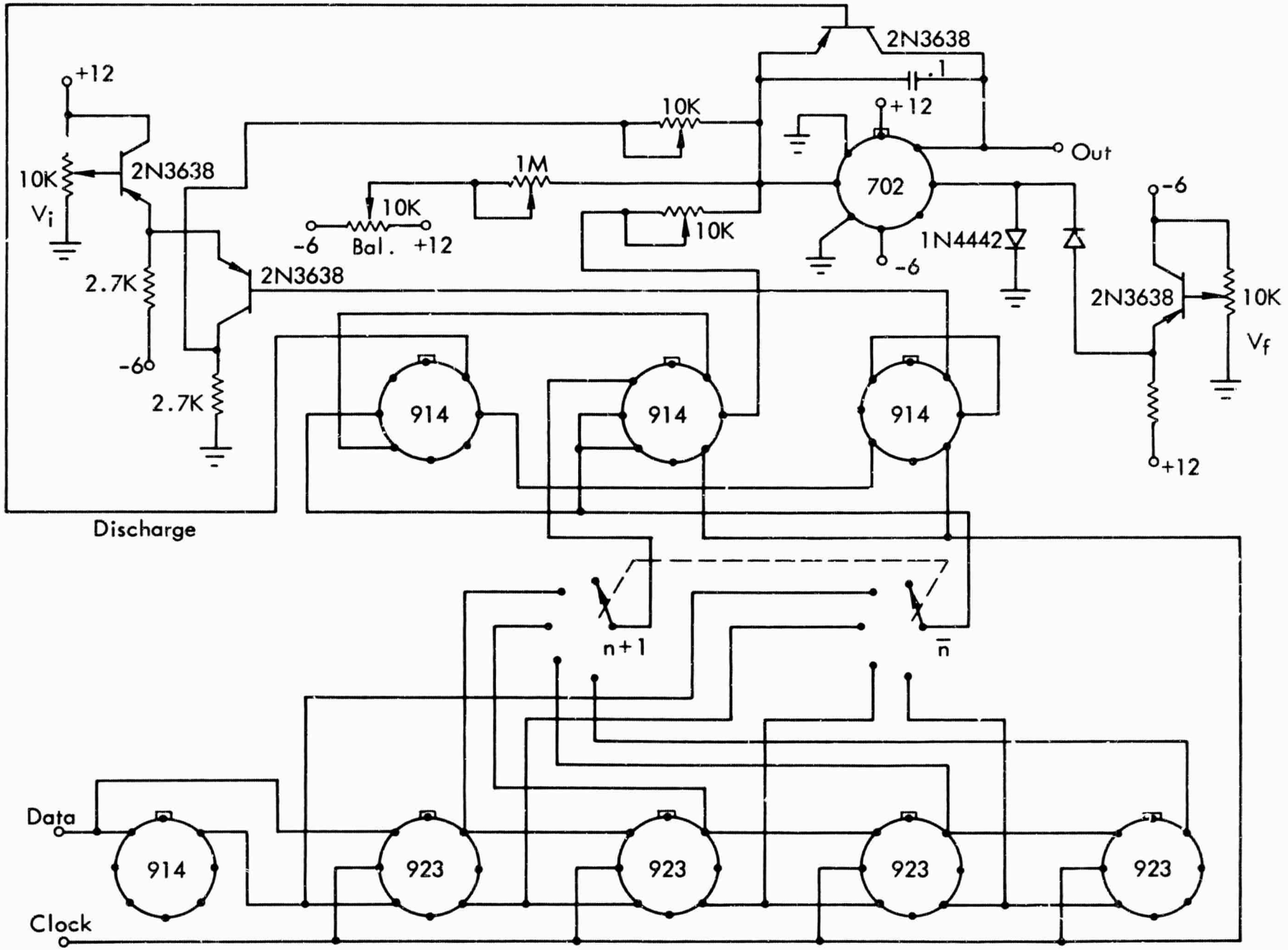

Fig. 10 — Facilitation circuit

discharging when the 2N3638 transistor shunting the feedback capacitor is shorted. The 914 gating circuits compute the time of discharge by logically comparing the selected delay time with the next successive stage of the shift register. The 914 gating circuits similarly compute the time at which the desired V_i (V initial) is applied by considering the onset of the selected delay and the onset of delay at the next successive stage. The 10K pot (upper left area of the schematic) adjusts the amplitude of V_i. The selected amplitude is then gated into one of the three summing resistors of the 702 at the appropriate time. The second summing resistor is used as a balancing input. The lower summing resistor feeds clock pulses to the 702 which, when integrated, result in the basic staircase waveform at the 702 output. The diode circuitry at Pin 6 of the comparator provides a clamp for the output to the voltage V_f (V final) set by the 10K potentiometer (right side of the schematic).

LEARNER CIRCUIT

The computation of delay, discharge time, and time at which to apply a V_i voltage are all accomplished as in the facilitation circuit. However, the summing inputs to the operational amplifier differ. The first two control the sign of the slope of the staircase waveforms. That is, starting the reinforcer associated with the learner activates the input, R, resulting in the gating of clock pulses to the first summing input of the 702. If the R line is not activated, clock pulses of reversed polarity are presented to the

702 through the second summing input. Thus, the output has either a positive or negative staircase waveform, according to the presence or absence of the reinforcer, respectively.

The third and fourth summing inputs are used for balancing and for the presentation of V_i, respectively. The output from the 702 operational amplifier feeds Pin 2 of a 710 comparator. The voltage on Pin 3 of this comparator is controlled by a voltage value fed through an emitter follower from a 2.7K potentiometer. When the output of the 702 exceeds the voltage setting on Pin 3 of the 710, the 710 fires. Then the transistor circuitry fed by the 710 behaves as a latching circuit, permanently clamping the 702 output to the voltage setting on the 2.7K potentiometer. Thus, once the 702 output exceeds the desired learning plateau, it remains clamped at the value so that the output may climb higher, but may never drop below, the acquired plateau (Fig. 11).

PROBABILITY CIRCUIT

A random function for the probability circuit (Fig. 12) is obtained by connecting two 702 high-gain amplifiers in series. The noise generated by the first transistor in the first 702 is amplified and fed to one input of a 710 comparator. The second input to the comparator, Pin 3, comes from a 100K potentiometer which sets the probability value by determining at what amplitude of the random function the 710 will be activated. The clock then samples

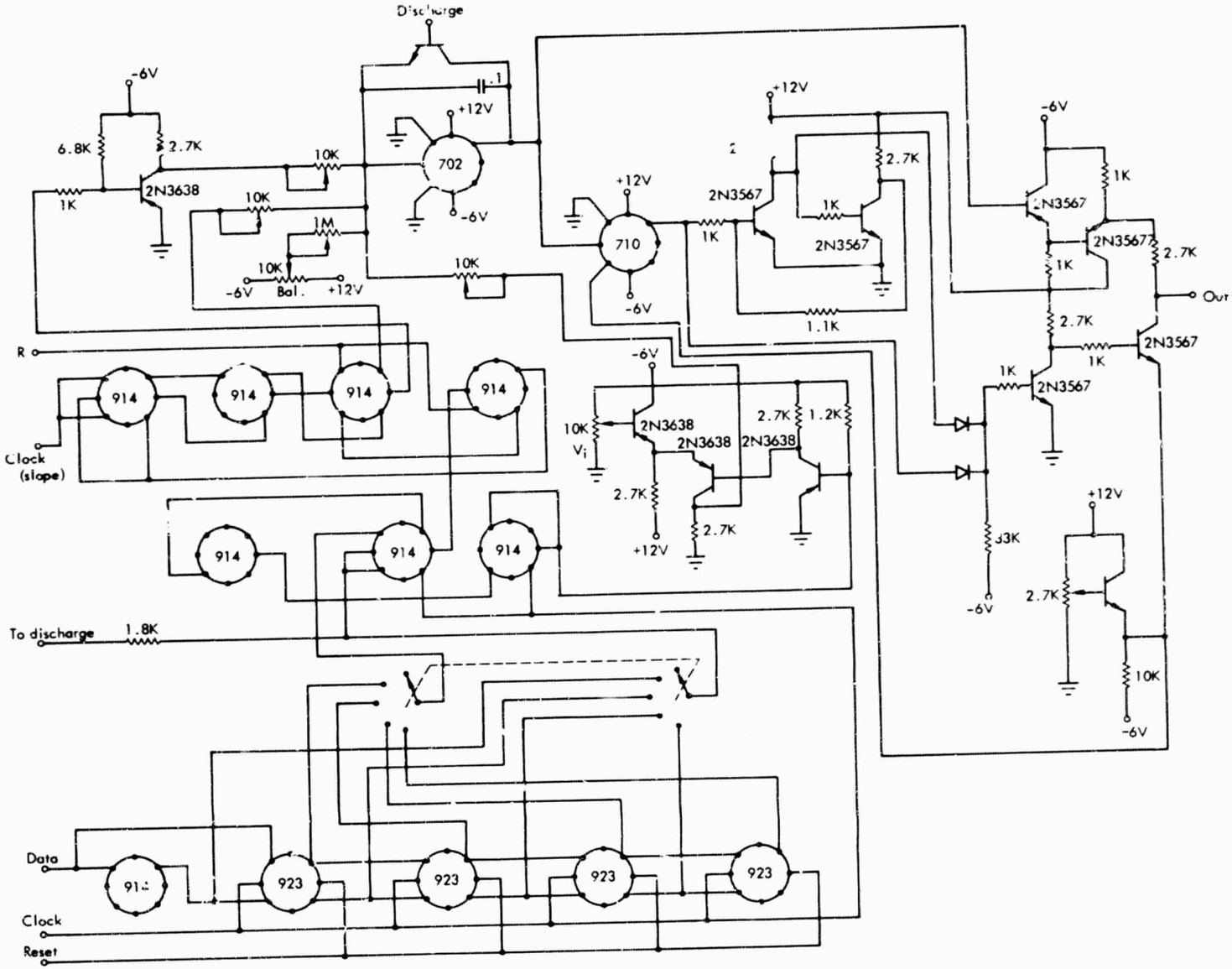

Fig. 11 — Learner circuit

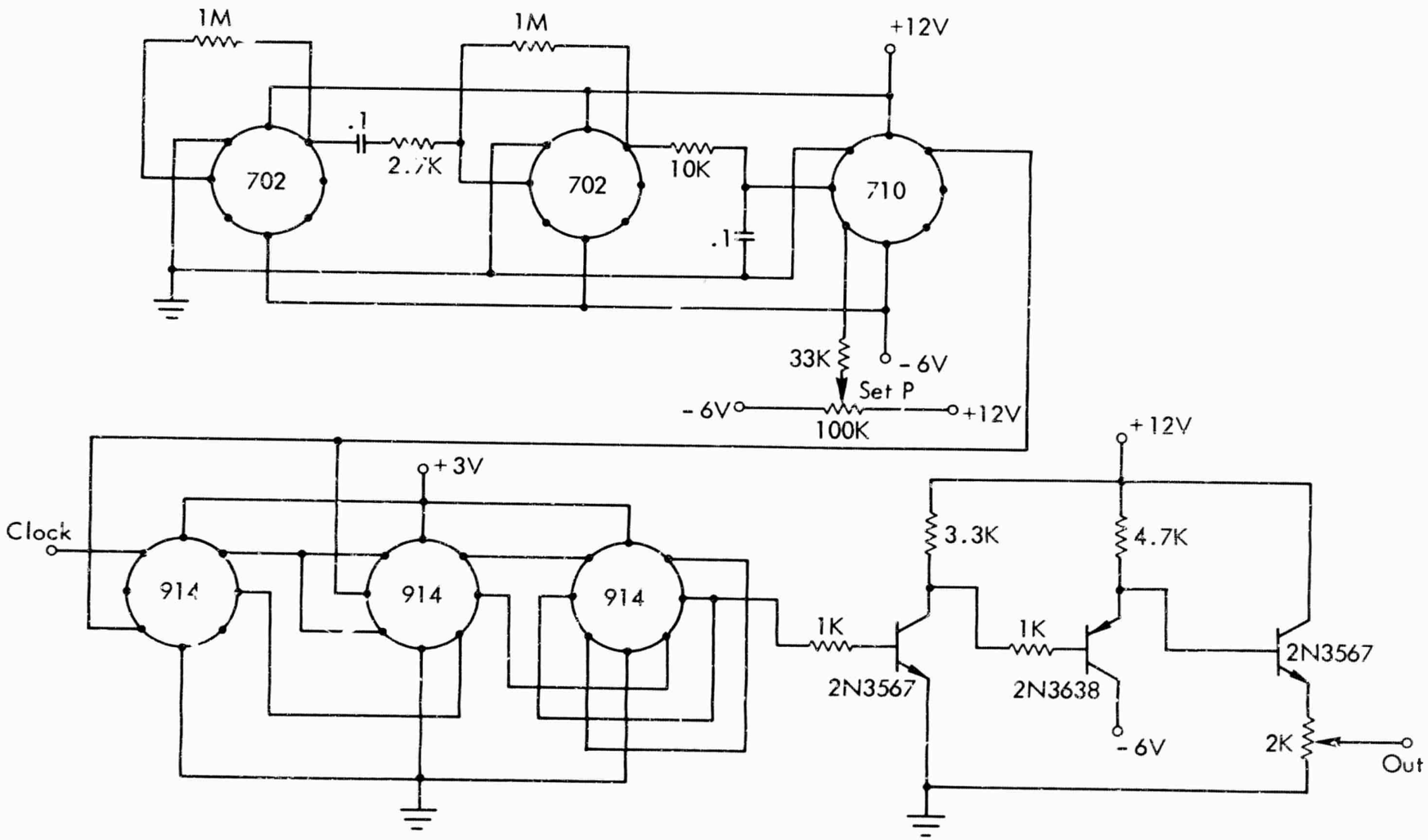

Fig. 12 — Probability circuit

the condition of the 710 output at discrete intervals. Finally, a small three-transistor network (right side of Fig. 12) controls the amplitude of the output.

CONTROL CIRCUITRY

A two-stage, 10-position, manually operated switch is wired to provide binary-coded decimal (BCD) outputs (Fig. 13). These outputs are compared, through negated "exclusive or" logic on a bit-by-bit basis, with the current number in a running BCD counter. If the two numbers are equal, an output pulse appears indicating that the BCD count is equal to the number set in the switch. When a match is found, the BCD counter and each circuit in the system is reset, allowing the problem to be rerun.

A stop-go switch sets a 923 flip-flop whose output controls the transmission of the clock into the control circuits. A 900 booster provides drive for the reset line.

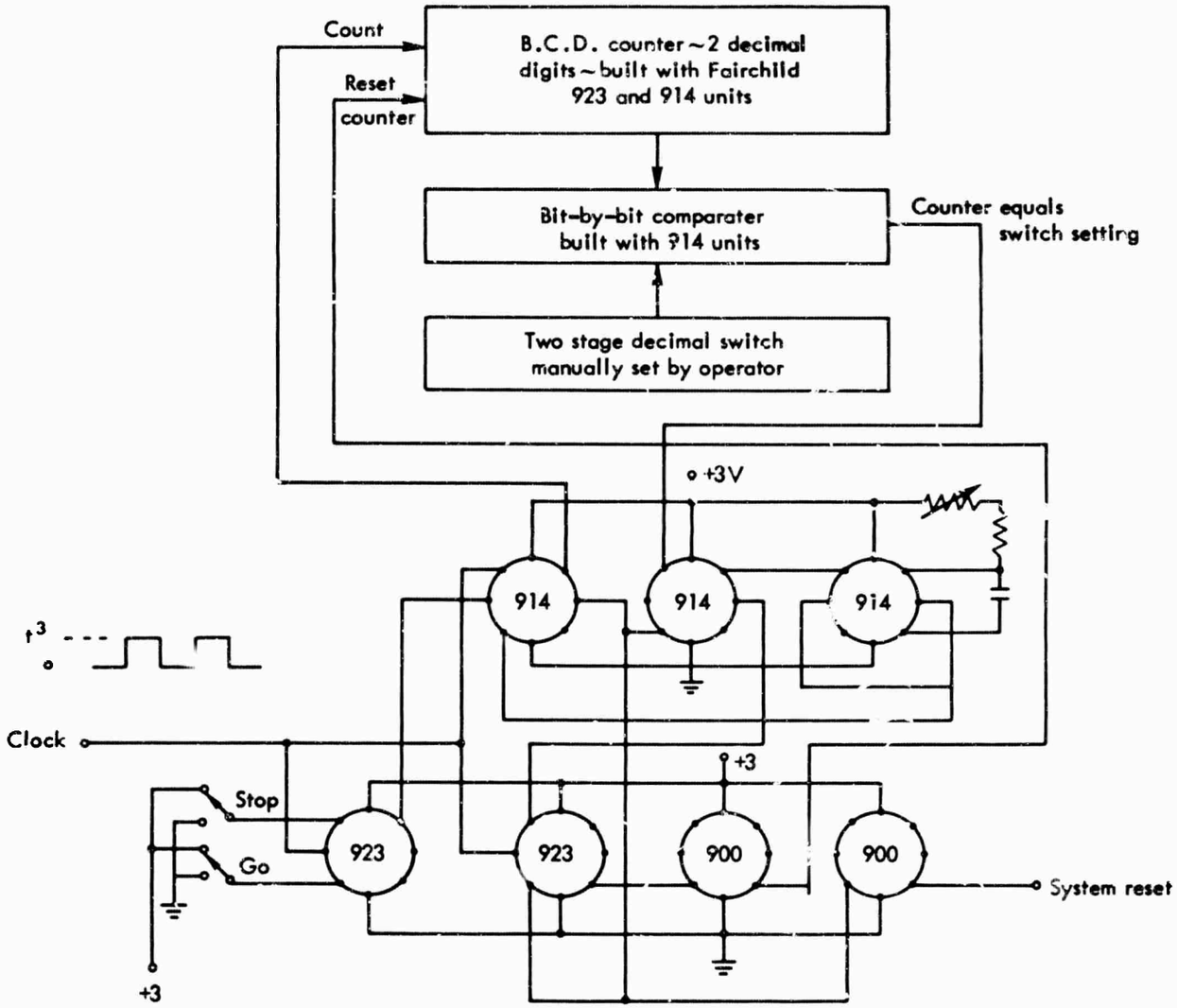

Fig. 13 — Control circuit

REFERENCES

1. Kleene, S. C., "Representation of Events in Nerve Nets and Finite Automata," Automata Studies, Annals of Mathematics Studies No. 34, C. E. Shannon and J. McCarthy (eds.), Princeton University Press, Princeton, New Jersey, 1956, pp. 3-41.

2. von Neumann, J., "Probabilistic Logics and the Synthesis of Reliable Organisms from Unreliable Components," Automata Studies, Annals of Mathematics Studies No. 34, C. E. Shannon and J. McCarthy (eds.), Princeton University Press, Princeton, New Jersey, 1956, pp. 43-98.

3. McCulloch, W. S., and W. Pitts, "A Logical Calculus of the Ideas Immanent in Nervous Activity," Bull. of Math. Biophysics, Vol. 5, No. 4, December 1943, pp. 115-133.

4. Harmon, L. D., and E. R. Lewis, "Neural Modeling," Physiological Reviews, Vol. 46, No. 3, July 1966, pp. 513-591.

5. Paxson, E. W., A Neural Net for Motivated Elementary Problem Solving, The RAND Corporation, RM-4476-PR, August 1965.

DOCUMENT CONTROL DATA

1. ORIGINATING ACTIVITY THE RAND CORPORATION	2a. REPORT SECURITY CLASSIFICATION UNCLASSIFIED 2b. GROUP

3. REPORT TITLE

HARDWARE AIDS FOR AUTOMATA DESIGN

4. AUTHOR(S) (Last name, first name, initial)

Reilly, Norman B.

5. REPORT DATE December 1966	6a. TOTAL No. OF PAGES 39	6b. No. OF REFS. 5
7. CONTRACT OR GRANT No. SD-79	8. ORIGINATOR'S REPORT No. RM-5153-ARPA	

9a. AVAILABILITY/LIMITATION NOTICES DDC-1	9b. SPONSORING AGENCY Advanced Research Projects Agency

10. ABSTRACT

A description of the hybrid computing hardware of a system designed to provide basic building blocks from which large neural networks can be constructed. The relationship of these building blocks to automata theory is discussed, and their possible usefulness in the construction of neural nets is examined. A simple network, containing at least one representative of each of five basic types of circuits, is constructed and the logical properties of the building blocks are described. An appendix gives detailed descriptions of the required circuitry and control functions.

11. KEY WORDS

Neurophysiology
Neural nets
Computers
Computer simulation
Physiology
Bio-engineering