AD 642 271

AFCRL-66-832

ADVANCED CRYSTAL GROWING TECHNIQUES

R. G. Seidensticker
A. I. Bennett
D. R. Hamilton

Westinghouse Electric Corporation
Research & Development Center
Beulah Road, Churchill Borough
Pittsburgh, Pennsylvania 15235

Contract No. AF 19(628)-5722

Project No. 5621
Task No. 562101

FINAL REPORT

Period Covered: 1 November 1965 through 31 October 1966

January 23, 1967

Prepared for

AIR FORCE CAMBRIDGE RESEARCH LABORATORIES
OFFICE OF AEROSPACE RESEARCH
UNITED STATES AIR FORCE
BEDFORD, MASSACHUSETTS 01730

DISTRIBUTION OF THIS DOCUMENT IS UNLIMITED

ARCHIVE COPY

DDC
RECEIVED
FEB 6 1967
B

AFCRL-66-832

ADVANCED CRYSTAL GROWING TECHNIQUES

R. G. Seidensticker
A. I. Bennett
D. R. Hamilton

Westinghouse Electric Corporation
Research & Development Center
Beulah Road, Churchill Borough
Pittsburgh, Pennsylvania 15235

Contract No. AF 19(628)-5722

Project No. 5621
Task No. 562101

FINAL REPORT

Period Covered: 1 November 1965 through 31 October 1966

January 23, 1967

Prepared for

AIR FORCE CAMBRIDGE RESEARCH LABORATORIES
OFFICE OF AEROSPACE RESEARCH
UNITED STATES AIR FORCE
BEDFORD, MASSACHUSETTS 01730

DISTRIBUTION OF THIS DOCUMENT IS UNLIMITED

ABSTRACT

This report describes a novel technique for floating zone crystal growth in which a resistively heated filament is immersed directly in the molten zone. Two furnaces employing this technique are described in some detail. Various considerations for the design of the filaments and for the preparation of feed rods are also discussed. Finally, experiments in the growth of apatite, spodumene, $LiNbO_3$, sapphire, KTN and KCl are discussed.

INTRODUCTION

This report is concerned with the growth of optical crystals by a novel float zone technique, known as the heater-in-zone method, HIZ. Floating zone growth is rarely used with crystals intended for optical applications. These crystals are electrically insulating, and it is difficult to heat them with rf fields. Electron bombardment has the complication that the beam current must be removed by secondary emission. The crystals do not have strong absorptivity in regions where radiant heat sources are available, so that generation of a molten zone by this means is difficult. Concomitant with their poor electrical conductivity is weak thermal conduction, so that formation of a molten zone by heating from the outside is difficult under the requirements for self-supported zone. The low thermal conductivity and a maximum zone height set by surface tension at once place a limit on the maximum diameter that can be accommodated and guarantees that neither the freezing nor the melting interfaces will be planar or for that matter, controlled in shape. Finally, many materials of optical interest must be grown under controlled atmospheres, or with an electric field, to pole domains in the structure.

The research undertaken at Westinghouse Research & Development Center on this contract has been concerned with the growth of crystals by a floating zone technique in which the heat is supplied by wires or strip heaters immersed in the zone proper.[1-3] A schematic representation of the arrangement is shown in Figure 1. This technique bypasses many of the disadvantages of the externally heated zone. The heat is supplied precisely

where it is required, in a plane normal to the growth axis. The coupling is by thermal contact with the liquid and the coupling to the growing interface is very close. Because the heat is supplied more less uniformly over the zone, zone diameter becomes an independent parameter, no longer coupled to the zone height through the thermal conductivity and in principle, zones of any diameter can be used. The zone height may be short, and the opportunity for contamination of the apparatus by the material being grown, as well as the reverse is reduced. The heat process is very economical in its material and power requirements. Because the heat is effectively used, the heater strips are very small, a factor that might be of importance if they are of some precious metal, for example, iridium. The power requirements are equally modest for only a few hundred watts at 60 cycles is necessary to melt sapphire. The atmosphere around the growing crystal is specified only in that it must be compatible with the heater material employed. Vacuum is perfectly acceptable, and under many circumstances neutral and oxidizing atmospheres are not harmful at the temperatures of interest. For all of these reasons the apparatus used to grow crystals by the immersed heater technique is very modest and the amount of care and attention required during operation is low.

The primary disadvantage of the technique lies in a requirement of heater material compatible with the material being grown. However, if the crystal can be grown from a melt in a crucible, then it can also be grown by the HIZ method, for the same material used as a crucible can be used to protect the heater in the zone.

We have grown on this contract crystals of KCl, $Ca_5(PO_4)_3$, KTN, $LiNbO_3$ and Al_2O_3. The crystals are generally clear, a few centimeters long, and around three to four millimeters in diameter. Some examples are shown in Figure 2. Typical growth rates were of the order of several millimeters to several centimeters per hour.

Flux growth of sapphire was tried but not pursued very far because of the low growth rates, evaporation problems, and because sapphire had already been grown directly from the melt.[3] Fluxes are used since they decrease the temperature of growth, for example, through an eutectic reaction, but they have the disadvantage that the flux may contaminate the growing crystal, and that growth rates which formerly were of the order of an inch an hour may be reduced several orders of magnitude due to the sluggishness of mass transport through the flux itself. Since Al_2O_3 can be grown directly, the growth of this material by flux technique was not pursued further, and the effort was placed on KTN. KTN is incongruently melting and crystals of a desired composition cannot be grown from a melt of that composition. In a sense this is solution growth, for the melt does indeed differ in composition from both the growing crystal, and in the case of the floating zone, from the feed material as well.

In the following report we will discuss the general considerations governing the heater-in-zone technique, considerations like heater compatibility, heater design, power requirements, crystal growth rates rotation and so on. We will then describe in somewhat greater detail the particular processes used with each material grown on the contract,

including the specialized new techniques developed for the handling of raw feed material.

EQUIPMENT

The equipment required for this method of crystal growth is simple. All that is really necessary is a means for moving the source and seed relative to the filament in some ambient. However, additional refinements such as positioning capability during operation, good visibility, rotation, etc. are desirable. Since only relative motion is required, either the material or the filament could be movable; in the two furnaces used for the present studies, the filament was stationary and the source and seed material was movable. One furnace was constructed especially for use with HIZ growth and incorporated all these refinements, while the other furnace was a modification of an existing piece of apparatus and lacked some features of the first.

Furnace A

The first furnace (Furnace "A") is shown in Figure 3 which gives an overall view and Figure 4 which shows details of the furnace chamber. The furnace chamber, entirely brass, is about 4-1/2 inches deep and ten inches inside diameter. It is mounted on a short section of steel I-beam, which also provides convenient horizontal surfaces for mounting the upper and lower pulling mechanisms. A conventional oil diffusion pump, mechanical

pump, and liquid nitrogen trap compose the vacuum system; pressures below 3×10^{-6} mm Hg, as measured on a Philips gauge, have been obtained while a molten zone was held at 1700°C in the system.

Visibility in the furnace was excellent and an extremely useful feature for crystal growth work. In operation, a 12" diameter 3/4" thick glass disk formed one face of the chamber resting on two concentric O-rings. A vacuum was pulled between the O-rings to form a vacuum clamp which held the face plate with about 300 pounds force. The furnace could be operated from pressures slightly above atmospheric to 10^{-6} Torr since the double O-rings effectively provided a guarded seal and leakage in vacuum operation was never a problem. The face plate has a safety factor of about seven when under vacuum. The mechanical supports are also provided to prevent dropping the face plate when clamp vacuum was released. Visibility in the system was also improved by mounting a number of small mirrors in the furnace chamber so that all aspects of the liquid zone and the growing interface could be easily seen. Two sheets of Polaroid plastic in a holder could be slipped over the face plate to provide a variable density filter. Since the overall power level in the furnace is low even for high temperature materials such as apatite, the face plate and filter remain relatively cool.

The identical top and bottom vertical drives are independent of each other and are based on milling heads which not only provide the vertical motion but also allow lateral positioning in the horizontal plane. The lead screws are all 10 tpi. The vertical screw is driven by a Bodine

1.9 rpm gear-reduced D.C. shunt motor, whose speed can be continuously varied from about two to about 0.1 rpm by a Servospeed thyratron controller (Electro Devices, Godwin, N.J.); this is further reduced by an Insco gear reducer (Barry Controls, Inc., Groton, Mass.) with ratios of 1, 2, 6, 15, 30, or 60. This combination thus yields overlapping speed ranges from 12 to 0.01 inches per hour.

The carriages driven by this system also hold a small 28 v motor with permanent magnet field, to provide rotation of the source material and the growing crystal. The speed of rotation was reversible and was controlled from 20 to about 275 rpm by a Variac-rectifier combination; a lower speed range would probably be better. Pin vices are mounted on the vertical pull rods which are made of polished stainless steel. The rods enter the furnace chamber through seals on two large sylphon bellows. These allow for the lateral positioning; the vertical motion can be obtained either from compression of the bellows or by sliding the pull rod through a Wilson seal. For most experiments, the bellows were used only for accurate lateral positioning of feed and pull systems with respect to the stationary heater. In order to reduce the torques required of the pull motors, and weight (and when necessary the atmospheric forces resulting from vacuum operation) of the vertically driven parts is counterbalanced, and one of the weights can be seen in Figure 3.

Several designs were investigated for the Wilson seals for the feed and pull rods. The problem which arises is that of providing a sufficiently good vacuum seal, and at the same time a sufficiently

frictionless seal for rotation over long periods of time; there is a tendency for lubrication to be wiped off the rods, and the friction increases with time. First, in line with the manufacturer's suggestion, the O-rings used in the seal were slightly oversized and were compressed in their housing to give contact with the shaft. The wear properties of such an arrangement for a rotating and sliding seal are many times better than when an undersized O-ring is used. Second, two O-rings incorporating MoS_2 as a self-lubricant were used at each end of the Wilson seal chamber. They were placed one on top of the other, and the small annular space formed by the two O-rings and the shaft serves as a reservoir for oil to lubricate the seal. Diffusion pump oil was used at first, with vacuum as the goal, but it was quickly discovered, and verified by substantial consultation, that these oils are not good lubricants. A light lubricating oil was much more satisfactory, and did not spoil the vacuum.

The heaters themselves are held between a pair of jaws attached to water cooled heater support blocks. Both the power and the water cooling are brought to these through the rear wall of the furnace by two pairs of 1/4" O.D. copper tubes held by O-rings in modified Swagelock fittings mounted in the furnace wall. The entire fixture can be moved perpendicular to the wall for alignment. It can be seen that the Tee-shaped jaws extend beyond the support blocks, and that these extensions are drilled for a machine screws. For heater installation, both heater jaws are bolted to a jig which holds them in this position. The heater can then be conveniently installed at a desk, under a microscope if necessary

and the entire assembly again transferred and installed in the furnace as a unit, after which the jig is removed. This is usually much easier than having to assemble the heater directly in the furnace, especially if an elaborate heater with several wires is used.

For heater power a low voltage high current source, typically two volts at a hundred amperes is required. Suitable transformers for this range are often difficult to find. A very satisfactory and flexible arrangement is to dismantle a Variac or Powerstat, tape-insulate the toroidal core and winding, and thread through this transformer primary a secondary windings, typically seven of eight turns, of heavy copper braid in plastic sleeving. The number of secondary turns is chosen to suit the filament requirements, and is readily changed as desired. The toroidal primary is fed from another stabilized Variac for power control.

Most transparent insulators are brittle over a wide temperature range, and are particularly susceptible to cracking as a result of thermal strain during cooling. Since in our apparatus the crystals grew below the filament heater, a small tube furnace or afterheater was mounted below the filament to give added control over the thermal geometry of the growing crystal and to provide annealing of the grown crystal. This afterheater is composed of two similar windings, wound in bifilar fashion on a doubly-threaded alumina tube over which, after winding, another closely-fitting alumina tube is placed. The use of a bifilar arrangement could permit the windings to be used in series for heating power, and simultaneously in parallel to serve as a resistance thermometer for measurement of afterheater

temperature. Other temperature measuring means, e.g., thermocouples could also be used. In use, the grown crystal is pulled entirely into the afterheater after growth and is cooled by slow reduction of the afterheater temperature by a clock motor drive on the control Variac at rates of the order of 100°C per hour. Since the main heater might radiate appreciable power to the crystal even after detachment, it too has a motor-driven power rundown.

Furnace B

The second furnace used in the present studies (Furnace "B") is shown in Figures 5 and 6. Since this furnace was built by modifying an existing piece of apparatus, it was not possible to incorporate all of the refinements present in the other furnace, such as lateral adjustment of the crystal position during operation of the furnace. This furnace nevertheless proved reasonably satisfactory for many experiments, especially the growth of sapphire.

Rather than separate drives for both the source and seed as in Furnace "A", this furnace has only a single pull rod attached to a series of sylphon bellows to provide the movement. The main drive mechanism is a fine pitch screw driven by a constant speed AC motor through a stepwise drive to give speeds from 2.5 to 316 microns per second. Rotation is provided for the bottom material, usually the seed, by a small 10 rpm motor mounted directly on the pull rod inside the furnace chamber. Adjustment of the separation between the source and seed is possible over a

limited range by a second shaft, concentric with the pull rod and also sealed via a sylphon bellows.

The visibility in this furnace is more limited than in Furnace A since only a 2" diameter window is provided but the judicious placement of mirrors in the chamber eliminates most of the inconvenience of the narrow field of view. The small window and conventional clamps allow the furnace to be operated at pressures somewhat above atmospheric when desired. If low temperatures and operation at ambient pressure is satisfactory, a clear plastic plate may be used instead of the metal door. In this case, of course, visibility is comparable with Furnace A.

HEATER DESIGN

The resistance heater is the most critical element in the entire system. Upon its design depends the crystal perfection, zone size, the contamination of the zone, and the overall stability of the growth system. Some of these design requirements are fairly obvious, and easy to beat. Others are rather more subtle, and we shall discuss all of these in some detail in this section.

The easiest consideration is the choice of heater material, which for any given crystal is constrained by the operating temperature or by possible reactions with the liquid or the furnace atmosphere. Platinum, iridium and tungsten have proved suitable for crystal growth, although tungsten was used only for the growth of sapphire. Platinum was most amenable to fabrication, for both iridium and tungsten are

rather fibrous and somewhat hard to handle, especially when holes had to be drilled through heater material, or intricate shapes stamped out of sheet stock.

In general, it is desirable to grow a crystal in which at least the radial temperature gradients are small. If this condition is met, the growing interface is more or less planar, a desirable feature. In the case of an extended zone, both these requirements can be met if the heat input to the zone is uniform. In the small zones with which we must work, the surface losses constitute a serious heat leakage from the zone periphery, so to maintain or even approach a planar growth interface additional heat must be supplied at the zone edge. Thus the temperature of the heater should ideally be more or less constant over the entire area of the zone, but should rise somewhat outside the zone. Now the temperature in a uniform resistance heated wire would be constant over the length, but for the losses by thermal conduction to the electrodes clamped on the ends. Thus a real filament will typically have a gradient of the wrong size near the zone boundaries. From these considerations it is apparent that a single uniform resistance heated element is not suitable for the task in hand. All of the heater systems that have had any degree of success involve either multiple wire heaters or flat strip heaters into which notches and holes have been cut to generate heat in a non-uniform way at the zone edge. The strip heaters have proven most satisfactory from the standpoint of flexibility, and are certainly more easily fabricated than the rather intricate filament

designs that were first employed. Strip heaters have the added advantage of a considerably lower operating temperature, for their greater area insures more effective surface loading and thus lower excess temperatures.

The shape of the grown crystal is determined by the shape of the molten zone, and if the molten zone has a tendency to pull off to the side, to shrink or to grow, the resultant crystal will reflect these changes. The stability of shape in the molten zone is dependent to some extent upon the choice of heater configuration. In normal float zone techniques, surface tension is sufficient to generate zones which are symmetric. If a heater is used which consists of a set of cylindrical wires, then the liquid is continuous from the melting to the freezing interface just as in ordinary float zoning, and surface energy does insure a degree of stability. If on the other hand a strip heater is used in which the only connection between the upper and lower halves of the liquid is through a notch, a slot or a series of holes, then zone stability is not greatly effected by the surface tension. In both cases, another sort of stability factor enters the situation. If the temperature falls from the zone edge to the clamps holding the heater elements, then there is a strong possibility that surface tension will pull the liquid out of the zone and deposit it as frozen material on the heater. In extreme instances this can lead to the growing crystal freezing to the heater. On the other hand, if the temperature rises within the heater element at the edge of the zone then there is a natural centering effect. If surface tension pulls the liquid along the heater element, it finds itself in a

hotter area and cannot freeze. This condition, of a minimum temperature in the zone with rising temperature beyond the zone edge insures automatic centering action for the growing crystal.

The first heater to see significant use was composed of six wires in three parallel pairs, disposed as shown in Figure 7c. This scheme has the advantage of a distribution of heat which has sixfold rotational symmetry, assuming none of the wires touch at crossings. However, it requires that the wires be at three different levels axially, unless some interweaving scheme such as shown in Figure 7d is employed. This scheme can preserve the sixfold symmetry while reducing the number of levels to two; assembly of this heater is tedious although it has been successfully done.

A variety of other filament configurations were also used in these studies and some of these are shown in Figure 7. Platinum and iridium wire was relatively easily obtained and wire filaments were made of these materials in the two to ten mil diameter range. A disadvantage of those configurations in which the wires cross is that, excepting for very center of the zone, the amount of heat generated rises as one proceeds radially inwards. Unless the zone edge is near the six sided figure bounded by the pairs of wires, the condition of rising temperature gradient outside the zone edge is not easily met. Wire heaters in general have to run at higher temperatures relative to the melting point than strip heaters and are consequently more prone to burn out. Finally, in growing relatively large crystals it is possible to have

a "cage" of solid material around the liquid because the heat is produced in a sharply localized region. Burn out of a single wire in a molten wire configuration has also led to a catastrophic failure of the remainder, which were not able to withstand the transient increase in voltage that occurred when the load impedance changed. There is also some difficulty with the overall stability of wire heating arrays, for during the initial warm up the wires expand and move about and wire to wire contact at the intersection points of molten wire arrays are made and broken with alarming frequency. Although it is in principle possible to avoid all short circuit currents at such points by use of a suitable polyphase power source, the overall disadvantages of wire heaters at the present rule out their continued use, at least with small zones.

For these reasons most of the heaters used were strips of foil, two to ten mils thick, cut into various shapes. Some of these are shown in Figure 7. The notches shown in this figure reduce thermal conductance to the clamp and increase heat generation locally, generating the desired central minimum temperature. The tapered strip configuration has a similar effect spread out over the entire heater length. In both these the coupling of the liquid from top to bottom is relatively obvious, but in some heaters in which a single strip was used, holes were substituted for notches to generate local high temperature regions and holes were punched nearer the center of the strip to provide fluid flow from one section to another. In general, the thicker the heater material, the more uniform was the temperature across the zone, although of course the heat

loss to the electrodes is increased by the added cross-section. Nevertheless, for a given width, much more reliable operation was possible with thicker heaters. If the zone shape changes appreciably during operation, local hot spots may develop followed by an instability which causes burn-out. The use of heavier material greatly reduced these problems for the heavier material would not maintain the necessary thermal gradients for catastrophic failure. During crystal growth of $LiNbO_3$ at 1250°C, one filament shape had burn-out problems when made of four mil material, but lasted more than ten hours when made from ten mil stock.

FABRICATION OF STARTING MATERIAL

One of the biggest problems encountered during this work was obtaining starting material in a suitable form for use in the furnaces. What was desired was a uniform dense rod with sufficient strength to withstand the moderate handling of mounting in the furnace. This requirement was rarely met and in most cases the starting materials were powders: either the material itself or mixture of compounds which would react to give the desired product. A variety of techniques were tried to compact these into starting rods, but each material had its own particular characteristics and the technique finally used for each will be described in the section dealing with the specific material. Here, we will examine some of these general techniques. The methods used successfully can be broadly divided into three categories: 1) hydrostatic compaction, 2) compaction followed by sintering or, 3) sintering of a loosely

compacted powder. Some early attempts were made at using uniaxial compression, especially with lithium niobate powder, in a 0.25 inch diameter mold. Binding in the die was severe because of radial expansion and only the first few millimeters of powder were adequately compressed even at 150 Kpsi. For some materials the results of the uniaxial compression indicated that compression alone could produce a bar of sufficient mechanical strength to be useful as source material and so various techniques of hydrostatic compression were tried.

Hydrostatic Compaction

The initial efforts in this direction was to seal the powder in Tygon tubing, 1/8" I.D. by 2" long and then compress it in an oil-water press at 20 Kpsi. The powder did compact, but came out as a stack of small pellets instead of a solid bar. This indicated that the plastic casing around the powder expanded axially before it expanded radially enough to release the compressed powder, resulting in sufficient tension to fracture the bar. A different scheme was then tried using thin dip-molded latex tubes about 1/8" diameter and 4" long. These were held in a plastic jig so designed so that vacuum distended the casing while it was being filled with powder. It was hoped that the casing would still be in axial tension even after compression. The end of the rubber casing was closed with a rubber stopper and the assembly-jig and all-put in the pressure chamber. Narrow grooves along inside walls of the form insured transmission of the pressure all along the bag. After compression, and release, the casing was again distended with vacuum to release the bar without damage. This

technique was partially successful, however, frequently the bar came out in several pieces, some of which nevertheless were of usable size. One-eighth inch diameter pieces as long as 2" were sometimes obtained. The casings also had a relatively short shelf life for after a few months exposure to the atmosphere, they were too rotted to be used.

The technique was modified somewhat for lithium niobate for the indications from uniaxial compression of this compound were that compression alone would produce source rods of sufficient mechanical strength. To obtain higher hydrostatic pressures, an apparatus using argon as the pressure medium was employed which could generate pressures of up to 80 Kpsi. The latex casings on hand were too small to produce rods of sufficient size and also many were rotted so new casings were developed. After trying several different techniques, it was found that sheet polyethylene could be relatively easily formed into casings which were reasonably impermeable to argon. Four mil thick sheet polyethylene was wrapped around a 1/4" wooden dowel as shown in Figure 8. A small commercial sealing iron was then used to form the edge seal. Lengths of the tubing were then cut, one end sealed, and the tube filled with the starting powder. The tube was evacuated to a few Torr by the house vacuum and finally closed off. Once this sealing technique had been developed, very suitable starting bars could regularly be obtained with dimensions of about 1/4" diameter by 2" long.

Various time-pressure programs were tried with the argon press, but success in obtaining bars did not seem to depend on any of the parameters

except possibly the rate of depressurization. Typically a half hour was required to reach the peak pressure of from 50 to 80 Kpsi. The sample was then held at pressure for from five minutes to four hours. Finally, the pressure was released. The fastest that the pressure could be dropped from peak to atmospheric was about three minutes. At this high rate, there appeared to be some tendency for the sample to come out as pellets. If the pressure were released slowly over at least fifteen minutes, then solid bars were usually obtained. Evidently, there is a relaxation time involved, relating for example to the release of the bar by the casing, the out diffusion of gases in the bar, or some other process.

Heavy walled (2mm) plastic tubing (Polyflow) with an internal diameter of about 7 mm has also been used with some success in the argon press. The tubing is sealed at one end, filled and evacuated, and sealed off; a micro torch worked very well for this final seal. The capsule was then compressed in the usual way, but after thirty minutes or so at pressure, the bomb containing the capsule was heated to about 70°C to soften the plastic. In this soft state, the casing could not exert any tensile forces on the powder. The bomb was then depressurized in the usual manner. This method was tried only for KTN and at best yielded pellets about 1/8" diameter by 3/8" long, which, although not completely satisfactory, were better than anything obtained by other techniques.

The last in the list of pressing techniques is one which has not been completely evaluated - uniaxial compression laterally on the bar. This technique was suggested by the Ceramics Department of the Westinghouse

R&D Center for preparing KTN samples. A rectangular punch and die was used and the uniaxial pressure was normal to the side of the bar instead of along the length. This distributes the pressure more satisfactorily over the transverse section by reducing the binding.

Sintering

Sintering without prior compression has proven to be useful. Apatite, which could not be sintered in a platinum foil mold yielded acceptable starting bars when a column of loosely compacted powder was extruded upwards from a quartz tube through a heated collar close but not touching the column. The impetus for this technique arose early in the apatite growth work when an attempt was made to push the powdered starting material out of a glass tube directly into the molten zone with a piston. This did not prove too successful since the liquid surface tension would pull sections of the powder into the zone at random intervals resulting in changes in zone volume which prevented good growth. It was noticed, however, that because of mechanical or thermal sintering, several mm of powder could be extruded from the tube before it crumbled. Following this lead, an apparatus (Figure 9) was made in which a sleeve heater or collar was located just above the tube. The powder was then extruded upwards from the tube through the hot region so that continuous "zone sintering" took place. After passing through the heated collar the now-sintered change entered a guide tube which held it vertical but did not apply any other restraining forces, particularly any axial forces.

The temperature and speed used in this process varied somewhat with the material. Speeds were typically about 2" per hour at 1/8" diameter. For apatite, melting at 1700°C, the sintering heater was at roughly 1300°C, we have no way of knowing the charge temperature. Either powdered apatite, $Ca_5(PO_4)_3F$, or a stoichiometric mixture of CaO, $CaHPO_4$, and $CaCO_3$ were used with equal success. X-rays taken after sintering of the mixture showed that the reaction to form apatite had proceeded to completion; no trace of the constituents could be seen.

This process worked equally well with $CaHPO_4$ alone, producing a sintered rod of (apparently) $Ca_2P_2O_7$; it also yielded β spodumene, $Li_2O \cdot Al_2O_3 \cdot 4SiO_2$ from a mixture of Li_2CO_3, Al_2O_3, and SiO_2. It did not work at all on GeO_2 which either remained a powder or at slightly higher temperatures, melted completely; no sintering stage was observed.

In only one case was the starting material available as a sintered bar. Sapphire was grown from a 1/8" diameter solid rod of a commercial high purity alumina ceramic. Thus, in general, the technique for fabricating feed material for crystal growth presents one of the major problems for HIZ method. That which works well for one material may not work at all for another. However, we now have available a sufficient variety of techniques that some suitable solution can usually be found.

CRYSTAL GROWTH EXPERIMENTS

In the following sections, the experimental conditions for the growth of a number of crystals are outlined. None were investigated as thoroughly as they would be if the desire were to produce crystals of a specific material rather than to evaluate a growth technique. A summary of these experiments is given in Table I. Although the HIZ technique should be especially well suited for the growth of relatively large diameter crystals, most of the materials were actually grown as crystals 3 or 4 mm in diameter and several centimeters long. The largest crystals were those of KCl, a centimeter in diameter by 5 cm long. The remainder were limited by the size of the starting rods or by other furnace capacity limitations. On the basis of the present experience, however, there does not appear to be any real reason why a crystal several centimeters or so in diameter should not be grown by this technique providing that suitable apparatus is at hand.

Potassium Chloride

The initial operating characteristics of both furnaces were evaluated by growing crystals of potassium chloride. The melting temperature of 776°C does not strain the heaters, and 8 mil platinum wire was used in all cases. The largest crystals, about 1 cm by 5 cm were grown in furnace "B", and most of the discussion will center about this operation.

Starting material for the KCl growth was sintered rods left over from a project in another department. There were no problems, therefore, in obtaining starting material, and available crystals of KCl were used as seeds. Little difficulty was encountered in growing larger crystals for use as additional seed material of the proper shape. Typical growth conditions were: source material fed from above; dry air atmosphere; zone velocity about 10^{-3} cm/sec; and 5 rpm seed rotation. Platinum wire, 0.008 in. in diameter was used for the filament in a configuration similar to Figure 7c. Since there was no provision for the rotation of the source rod in "B" furnace, sufficient power had to be used to maintain a very large zone. If the zone were not large enough, some regions of the feed bar would not melt and solid source material would pass by the plane of the heater and interfere with the growth of the crystal. In the present instance, sufficient heat could be put into the zone to prevent this anywhere, but elsewhere the increased zone height led to distinct stability problems. In other materials, rotation of the source and the use of strip instead of wire heaters overcame this problem.

Although the configuration with the source on the top and the seed on the bottom seemed to be the more stable arrangement, this induced other difficulties peculiar to KCl. Despite starting material of very high initial purity, occasionally specks of contamination would appear in the zone. Whatever their source--atmospheric dust, etc.--these small particles would settle by gravity onto the growing interface and become incorporated into the growing crystal. If the growing crystal were on top, then this particular problem would be eliminated.

Extensive analysis of the grown crystals was not undertaken other than to ascertain that they were single, since the main purpose of this series of experiments was to delineate the problems which might be encountered in the operation of the furnace in the growth of less tractable single crystal compounds. A number of these, such as the need for feed and seed rotation, the desirability of something other than a wire heater, etc. were soon apparent, and corrective measures were taken. Other problems such as the usefulness of an afterheater were recognized only when higher temperatures and more brittle materials were actually grown.

Apatite

After evaluating the performance of furnace "A" by growing KCl, attention was turned to calcium fluorapatite, $Ca_5(PO_4)_3F$--apatite for short. The initial experiments with this material used the powdered compound fed directly into the molten zone and crystals one to two millimeters in diameter and over fifty millimeters long were grown. These crystals were severely cracked. The seeds used for this early work were obtained from a mass of hexagonal needles which were found in a melt solidified in a crucible used in an earlier attempt at apatite growth. Later work employed either zone sintered rods or crystalline pieces for the feed material and seeds which were sections of either natural or synthetic crystals, oriented along the c-axis. All the crystals were grown in an atmosphere of argon.

The prevalence of cracking led to the suspicion that the powders were not stoichiometric. In an attempt to check this, crystals were grown not only from mixtures of the constituents but also from apatite powder

furnished by the Phosphor Section of the Westinghouse Lamp Division. Thermogravimetric analysis confirmed that the powders were as specified, and results did not appreciably differ between the two. In one case, pieces of good synthetic crystal were used for both the source and seed material. Not only did cracking occur in the resulting crystal, but it also occurred in the source material as it was fed into the zone. All these considerations indicated that cracking was primarily thermal in origin.

Cracking of the crystals was reduced considerably when a 1200°C afterheater was used around the grown crystal. Even less cracking occurred when the afterheater temperature was raised to about 1400°C although a frosted crystal surface, probably due to thermal etching, began to appear. Lowering the temperature slowly after growth was completed also reduced cracking. Small but rather good crystals were grown. Some of these had very good flat faces of {10.0} and {12.0} type; one in particular was entirely bounded by such facets. X-ray photographs confirmed the {10.0} and {12.0} nature of these faces, the former being slightly larger than the latter. The presence of such facets suggested that in this case at least, quite uniform growth conditions had been obtained. When such preferential facet development occurs, it is necessary to have not only a very stable zone and pull rate, but also to have the preferred growth axis aligned with the axis of seed rotation.

Lithium Niobate

As a material for growth by HIZ, lithium meta-niobate, $LiNbO_3$, offered the challenge of a material with a high anisotropy of thermal

expansion,[4] providing a severe test of the capability of the technique for providing adequate thermal geometries. Some evidence of this capability had been shown by the work on apatite, however, the lower melting temperature of $LiNbO_3$, about 1250°C, meant that somewhat more range was available in afterheater temperature in relation to the growth temperature, and that more margin was available in heater design.

Since no reasonable source of starting material was found, all steps from synthesis to crystal growth were carried out in the laboratory. Stoichiometric quantities of $LiCO_3$ (reagent grade) and Nb_2O_5 (Kawecki Chemical Company, optical grade) were thoroughly mixed, placed and reacted in a platinum crucible in a pot furnace at about 800°C for four hours in air. Weight loss measurements indicated that less than 1 a/o of the lithium carbonate was lost in the reaction, and powder x-ray photographs gave only lines corresponding to $LiNbO_3$. This method of reaction thus seemed quite suitable for the synthesis of the starting powder.

Although it was quite easy to obtain the powdered compound, fabrication of this material into source rods was more of a problem. As described earlier, the initial trials of uniaxial compression showed that compaction alone could produce material of sufficient mechanical strength. The latex casings at 20 Kpsi in the hydraulic system were only partially successful so a change was made to polyethylene capsules in an argon system where higher pressures were available. The combination which seemed to give the best results was the thin walled polyethylene capsule discussed earlier and a pressure of at least 50 Kpsi with a moderately slow return to atmospheric

pressure. At best, the yield of usable starting rods was about 50%, which was tolerated because it was sufficient for work on the material.

Seed crystals were not available and were generated in the apparatus. Initially several .5 mm Pt wires were twisted together and growth seeded on these. The first growth was highly polycrystalline and very badly cracked at the grain boundaries. By continued growth and re-growth, it was finally possible to obtain some large single crystal grains which could be used as seeds. Once single crystal seeds were obtained, crystals were repeatedly grown, although these were marked by cracks. For all the crystal growth work, zone travel of about 1 micron per second was used and the seed was rotated when possible. The atmosphere was argon plus 5% oxygen at atmospheric pressure. As they came from the furnace, the crystals were clear with a yellowish tinge, presumably from a partial reduction of the niobium. Annealing the crystals at 800°C in air for four hours yielded the clear white crystals to be expected from this material.

The problem of cracking remained after otherwise single crystals had been obtained. K. Nassau[5] reported at the International Conference on Crystal Growth (Boston, 1966) that the addition of MgO to the melt would reduce cracking in Szochralski grown $LiNbO_3$. Since MgO apparently has a segregation constant close to unity, the material could not be added just to the zone. It was very easy, however, to mix about 1/2 a/o MgO with the $LiNbO_3$ powder before pressing the starting bars. The resulting crystals were much better, but still not completely crack free.

Up to this point, all the work on $LiNbO_3$ had been done in Furnace "B" which had no afterheater. Since the improved thermal geometry provided by an afterheater was moderately successful with apatite, a number of $LiNbO_3$ crystals were grown in Furnace "A" using an afterheater temperature of about 1000°C. The results were excellent, and crack free crystals could be obtained from the MgO doped starting material. Several runs were also made using the pure starting material and in one case an uncracked crystal was obtained. An additional benefit of using the afterheater was that a separate anneal was not necessary to obtain colorless crystals. The afterheater power was reduced slowly over a period of about an hour and this seemed quite adequate to oxidize the niobium.

Electrical polling[4] of the crystal was not attempted because of the low voltage rating of the insulation in the power feed into the furnace. A slight revision of the feed through design would easily accommodate the electrical fields needed for the polling of the crystal.

Again, extensive investigation of the resulting crystals was not undertaken. X-ray analysis of several crystals demonstrated that they were indeed single and of reasonable quality. Once this had been done, the work proceeded to other materials.

Spodumene

A few attempts were made to grow β-spodumene, Li_2O-Al_2O_3-$4SiO_2$. A stoichiometric mixture of the powdered constituents was run through the zone sintering apparatus, yielding a somewhat fragile solid rod which was identified by x-rays as β-spodumene. Attempts to grow crystals from

these rods yielded two types of results. With high growth rates- 2 in./hr. (1.4×10^{-3} cm/sec) or faster- a transparent , colorless rod was produced. X-ray examination showed no diffraction at all and presumably the material was a glass-not at all surprising in view of the known properties of this material. With growth rates less than 1/4 in/hr (3.5×10^{-4} cm/sec) a milky, irregular solid with internal bubbles resulted. This material indeed gave the powder x-ray diffraction pattern for β-spodumene. Continual evolution of bubbles in the molten zone seemed to occur no matter which direction the zone traveled or whether the atmosphere was argon or vacuum. Little work was done on this material, and no good crystals resulted, but it seems likely that further work could yield some satisfactory results.

Magnesium Oxide Flux Growth

Growth of magnesium oxide was tried using a flux technique. In flux growth, the heater must be closer to the source to the seed so that dissolution takes place at the source rod fcllowed by transport across the zone and deposition on the seed. Some initial investigations were made of the system MgO dissolved in molten KOH; R. C. Linares[6] reported reasonable solute concentration and growth rates at 400-500°C, without serious solvent evaporation in this system. Molten KOH is very corrosive to platinum and iridium, but attacks nickel slowly and silver perhaps not at all. Silver was used as a heater. For runs of the order of half an hour, there was no attack of the heater; further, there appeared to be no dissolution of the MgO source. The results of these experiments were

thus inconclusive, and no further experiments in MgO flux growth were tried. Other flux growth experiments are described in the following section.

Potassium Niobate-Tantalate (KTN)

As an example of an incongruently melting material, potassium tantalate-niobate was chosen.[7] Incongruently melting crystals present many of the problems encountered with flux growth since a crystal of one composition is grown from a liquid of another, and yet frequently do not present many of the evaporation difficulties encountered with true fluxes. The HIZ technique is particularly well suited for crystal growth in these cases since the liquid zone may easily be of one composition while the feed material and growing crystal may be of another. Since the zone may be very thin, the necessary transport of material is enhanced, especially if counter rotation of the source and crystal are used to provide stirring.

The starting material for the present work was synthesized by the Inorganic Materials Preparation Department of the Laboratories. The material as received was rather coarse, like sand, and could not be compressed into rods. Grinding this material in a vibratory ball mill produced a fine powder which showed some promise of being compactable. However, a really good technique for producing starting rods has not yet been found, and most of the pure compression methods tried produced the typical "stack of pills" morphology. It has been found, however, that these "pills" may be fused into a solid rod using a microflame torch, and crystal growth experiments used this material. The starting material itself has a composition of

$K(Ta_{.65}Nb_{.35})O_3$ and the liquid composition appropriate to this solid has a composition of $K(Ta_{.5}Nb_{.5})O_3$. Accordingly, some material of the latter composition was obtained and a small amount added to the filament prior to growth of the crystals. All growth experiments were carried out in argon plus 5% oxygen at atmospheric pressure. Platinum strip heaters (style "e" in Figure 7) were cut from 8 mil foil and required a power input of about 100 watts. As in the case of $LiNbO_3$, seed material was not available so that the initial crystals were seeded on platinum wire. Large grains have been obtained for seeds, but no good large single crystals of KTN have as yet been grown.

The somewhat irregular form of the starting material frequently made rotation of the source rod impossible; similarly, even the crystal could not always be rotated. For this reason, relatively slow growth velocities, about 0.25 microns per second were used to allow for the diffusive transport in the liquid. It may well be that the transport problem is producing some difficulty in the crystal growth since usually the material grown at the first part of a run is of better quality than that from the end of a run. Further, crystals grown when rotation was possible are unquestionably better than those grown without rotation. Thus feasibility has been demonstrated, but no more.

Sapphire

With a melting temperature of about 2050°C, alumina or sapphire presents problems in finding a suitable filament material. The first

attempts at the growth of sapphire crystals avoided the problem by using a lower temperature flux method with a lead pyrophosphate flux, (Al_2O_3 - 0.34; Pb_2O_7 - 0.3945; B_2O_3 - 0.265 and Cr_2O_3 - 0.0005). The growth experiments were done in a bell jar furnace and only crude crystals motion was available. A small amount of epitaxial growth was obtained on a seed cut from a sapphire light pipe, but the rate of deposition was so slow and flux evaporation such a problem that no further flux growth work was done. The balance of the effort along this line was directed, as has been described, towards incongruently melting materials.

There are a few metals suitable for use as filaments for direct crystal growth of sapphire. Bardsley[3] at the International Conference on Crystal Growth in Boston (1966) reported the growth of sapphire by this technique using iridium heater strips. The two mil iridium foil which had been used for heaters in our apatite growth work proved unusable for sapphire. The differential between the melting point of sapphire and iridium is about 300°C and if any hot spots developed in the filament, it burned out. The 2 mil stock was very prone to this. As a substitute, strip filaments of tungsten were tried. If four mil foil was used, sufficient reaction occurred with the molten alumina to burn out the filament after a few minutes. When ten mil tungsten strip was used (design b, Figure 7) the reaction was slow enough that the filament would last at least an hour. Since the growth rate was an inch an hour or more, this lifetime was acceptable. As might be expected, the power requirements are higher than for lower melting materials, but are still only about 300 watts for 3 mm diameter starting rods.

For once, there was no problem in finding starting material in suitable form. High purity (99%) recrystallized ceramic alumina rod from McDanel Refractory Porcelain Co. was used as starting stock and 3 mm Linde sapphire light pipe was used for the seed material. Several runs were made in an argon atmosphere, but at first it seemed that the residual oxygen might be giving trouble with the tungsten filament so subsequent runs were made under a 10^{-3} Torr vacuum. When better gas transfer facilities are installed an atmosphere will be used since there is some evaporation of the tungsten onto the grown sapphire.

Most of the Al_2O_3 crystals were grown without rotation and were consequently not particularly uniform. The filament tends to warp as it heats and presents a curved surface to the growing crystal. Since the liquid zone appears to be only about 10^{-2} cm thick, even slight warping of the filament makes rotation impossible. In one case it was possible to rotate the seed, and here the resulting crystal was quite regular, resembling the crystals of other materials grown by this technique.

Conclusions

The overall purpose of the contract has been to demonstrate feasibility of the heater-in-a-zone technique for the preparation of crystals of optical interest. We have successfully grown crystals of KCl, lithium niobate, apatite and sapphire. Feasibility of the technique has been demonstrated for potassium tantalate niobate, and to a considerably less satisfactory extent for spodumene. It is apparent from this relatively long list that the technique is indeed generally applicable and is

flexible enough to handle many of today's crystal growing requirements. There will, of course, always be other techniques for fulfilling some of our needs, but we believe that there will remain a hard core of crystals which do not readily respond to the more conventional growth methods, and it is in these cases that the HIZ method will find its prime application.

The advantages of the HIZ technique are its simplicity, and the relatively high degree of control that is available over the growing interface. The zone shape relates very closely to the heater geometry. For example, the 5-10 mil sapphire zone conformed very closely to the shape of the heater strip. Since the zone thickness is unrelated to crystal diameter, the technique probably can be extrapolated to larger crystal diameters. The disadvantages relate to filament-melt reactions, fabrication of starting rods, and the overall mechanical stability of the filament itself. We have demonstrated that the problems of feed rods fabrication can be overcome in all materials we tried, and we believe that the techniques that have been evolved are generally applicable. The relatively minor problem of mechanical instabilities in the heaters due to thermal expansion is very easily accommodated in the next generation of equipment by providing an adjustment to maintain tension on the heater strips.

In conclusion the authors wish to thank L. Potochnik and C. Mathis for their continuing technical assistance during the course of the experiments, and they wish to acknowledge the skills of W. Snider in manipulation of the argon press.

References

1. Gromakov, S.D.; Kurinnaya, V.N.; Latypov, Z.M. and Chvala, M.A.
A new method of zone refining.
Zhur. Neorg. Khim. 9, 1305 (1964)
Translated in Russian J. Inorg. Chem. 9, 712 (1964).

2. Gasson, D.B.
The preparation of calcium tungstate crystals by a modified floating zone recrystallization technique.
J. Sci. Instrum. 42, 114 (1965)
AD 462 353 (September 1964)

3. Bardsley, W. and Cockayne, B.
Growth and perfection of high melting point oxides.
Presented at the International Conference on Crystal Growth, Boston, 1966*

4. Nassau, K.; Levinstein, H.J. and Loicono, G.M.
Ferroelectric lithium niobate. 2. Preparation of single domain crystals.
J. Phys. Chem. Solids 27, 983 (1966).

5. Nassau, K.
Growth and properties of ferroelectric lithium niobate.
Presented at the International Conference on Crystal Growth, Boston, 1966*

6. Linares, R.C.
AFCRL report: AFCRL-64-971

7. Garn, P.T. and Flaschen, S.S.
Analytical applications of differential thermal analysis apparatus.
Anal. Chem. 29, 271 (1957)

---

*Papers presented at the International Conference on Crystal Growth will presumably be published in a supplement to the Journal of the Physics and Chemistry of Solids to appear about February, 1967.

TABLE I

Material	Formula	T_m °C	System	Filament	Typical Growth Rate (cm/sec)	Comments
Apatite	$Ca_5(PO_4)_3F$	1700	Hex.	.05 mm Ir strip	6×10^{-5}	Good crystals grown-cracking a problem
Lithium Niobate	$LiNbO_3$	1250	Rhomb.	0.2 mm Pt strip	5×10^{-4}	Relatively good crystals grown; some cracking problems
Potassium Chloride	KCl	776	Cubic	0.2 mm Pt wire	10^{-3}	Good crystals easily grown
Potassium Tantalate-Niobate (KTN)	$K(Ta_xNb_{1-x})O_3$	Incongruent	Tetr (Almost Cubic)	0.2 mm Pt strip	2.5×10^{-5}	Polycrystalline samples to date
Sapphire	Al_2O_3	2050	Hex.	0.25 mm W strip	6×10^{-4}	Relatively poor crystal quality
Spodumene	$LiO_2 \cdot Al_2O_3 \cdot 4SiO_2$	1550	Monocl.	0.05 mm Ir strip	1.4×10^{-3}	Glass formation
					3.5×10^{-4}	Polycrystalline with inclusions

Figure Captions

Figure 1 Schematic diagram of the heater-in-zone configuration.

Figure 2 Typical crystals grown by HIZ method. L to R: KCl, apatite, $LiNbO_3$.

Figure 3 Overall view of Furnace A.

Figure 4 Closeup view of Furnace A.

Figure 5 Overall view of Furnace B.

Figure 6 Closeup view of Furnace B.

Figure 7 Typical configurations for wire and strip filaments.

Figure 8 Schematic drawing of fabrication of sheet plastic capsules.

Figure 9 Schematic drawing of zone sintering apparatus.

Dwg. 852A671

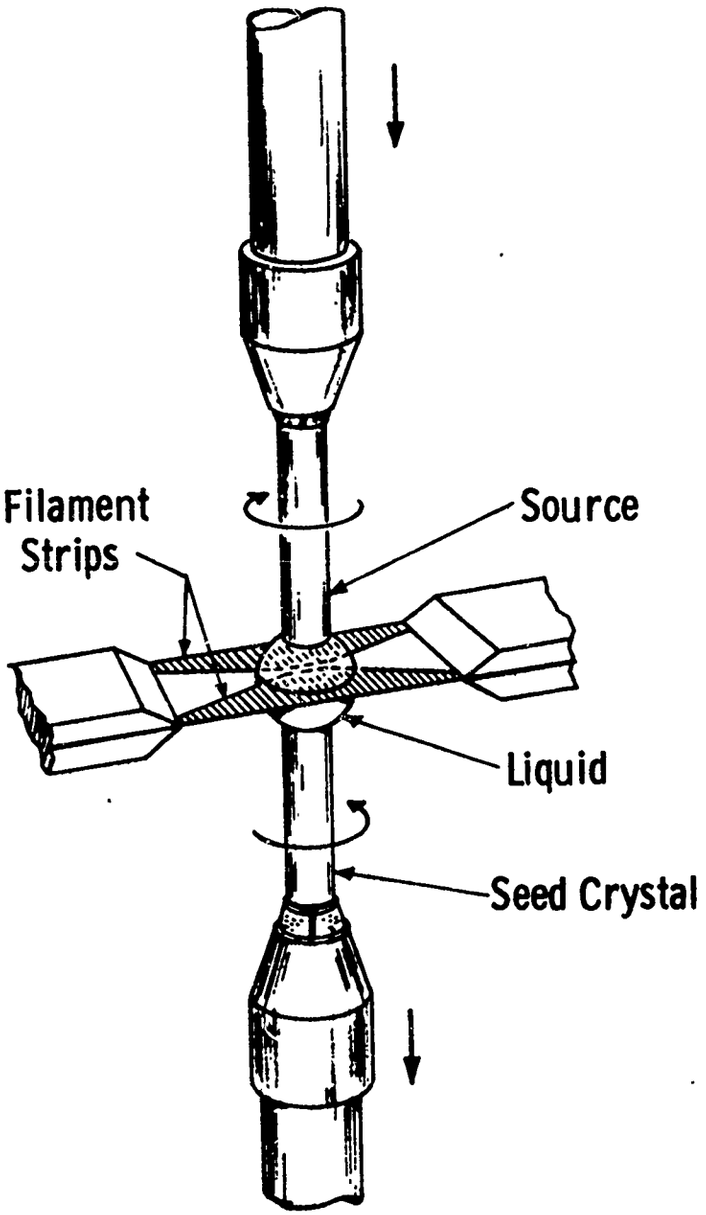

Fig. 1

Fig. 2

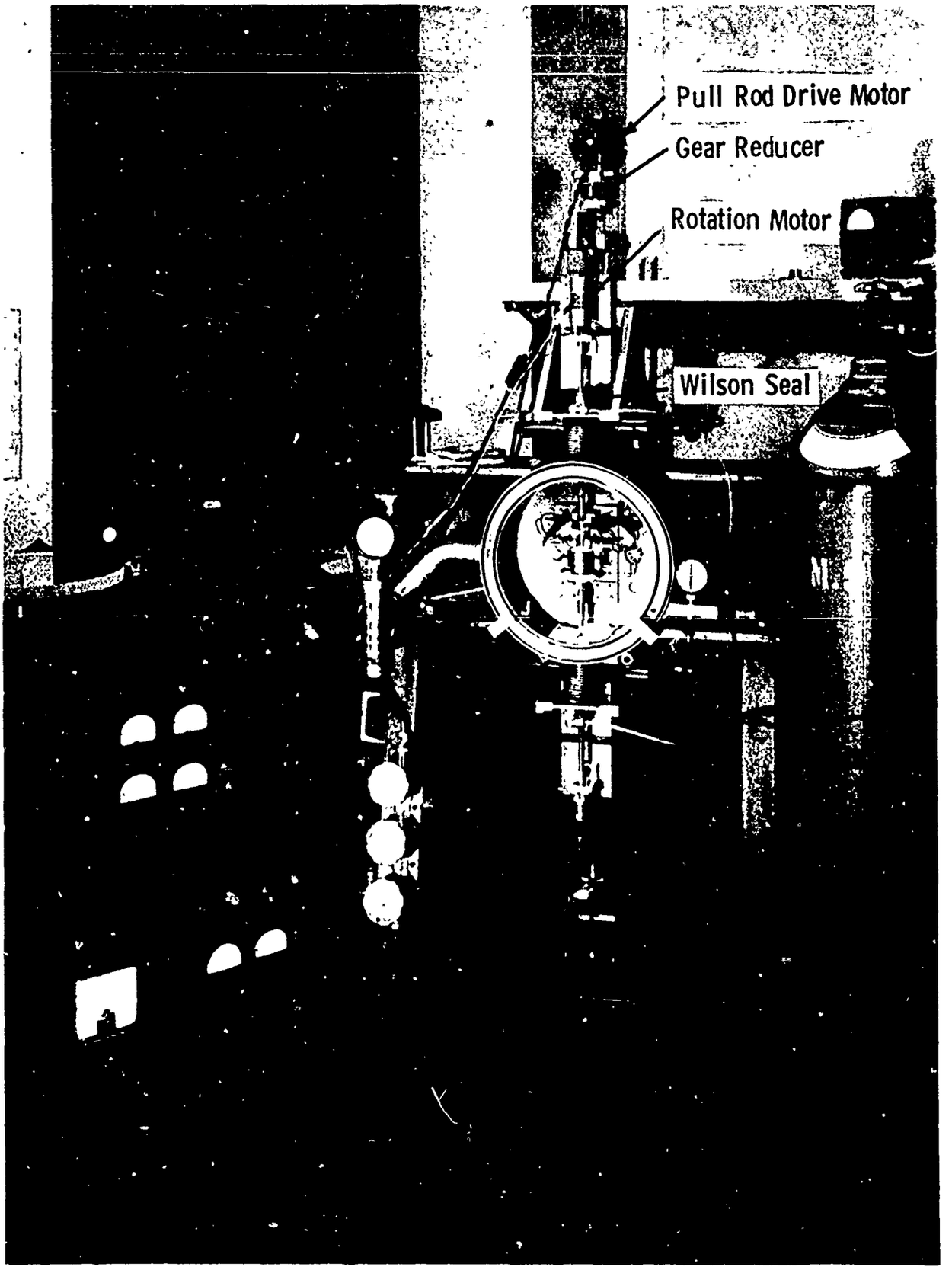

Fig. 3

RM 38447

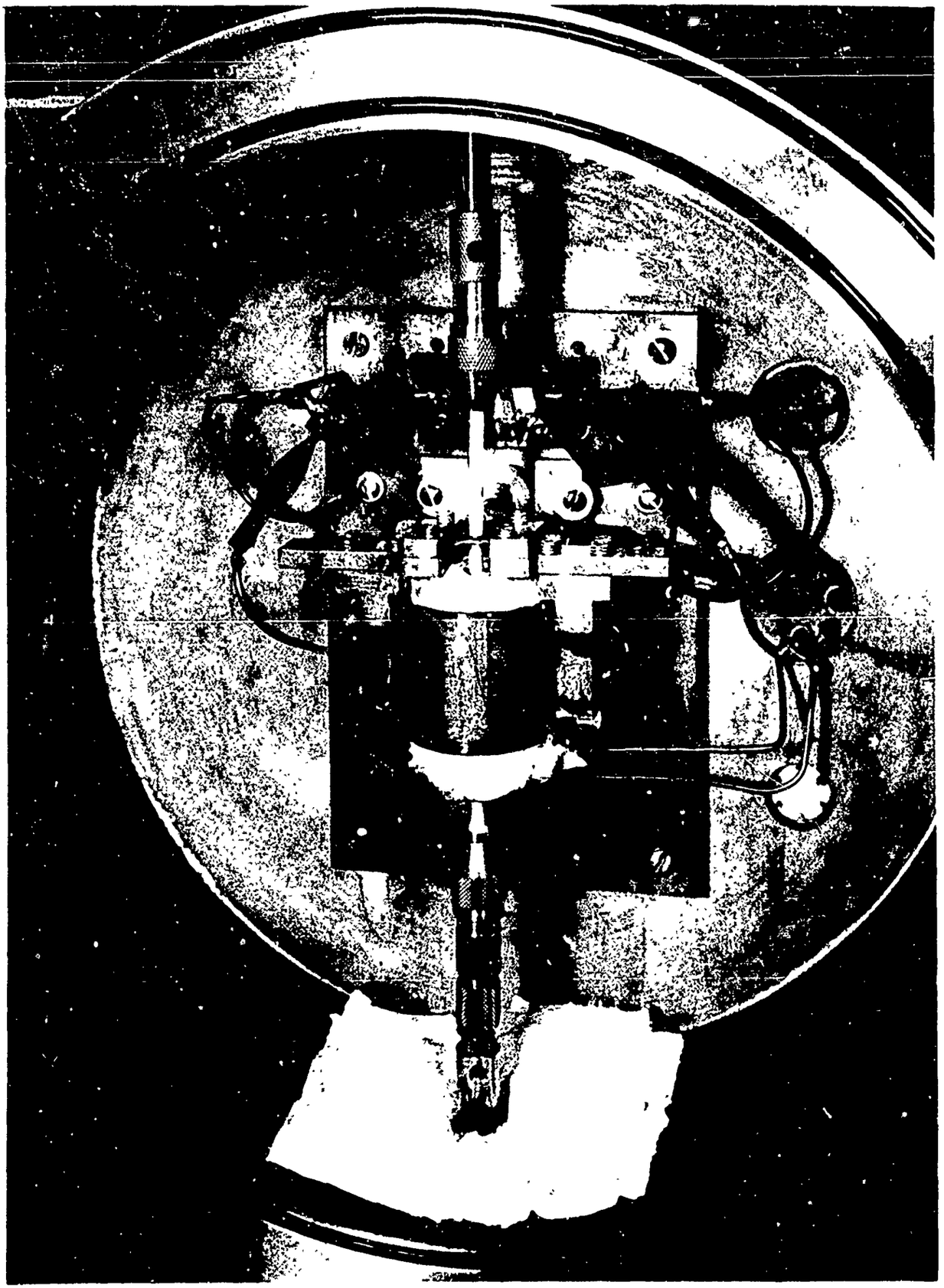

Fig. 4

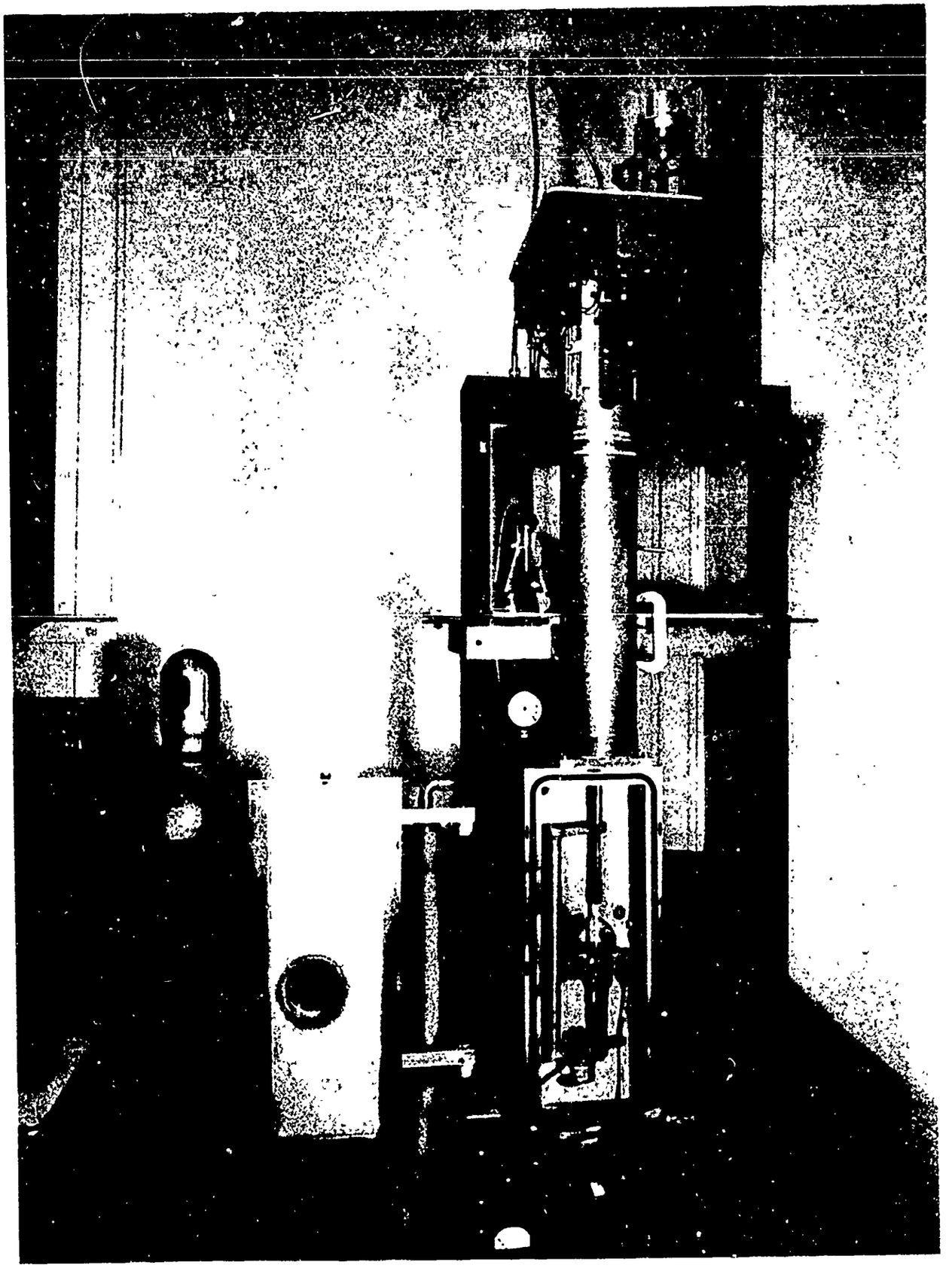

Fig. 5

RM 38449

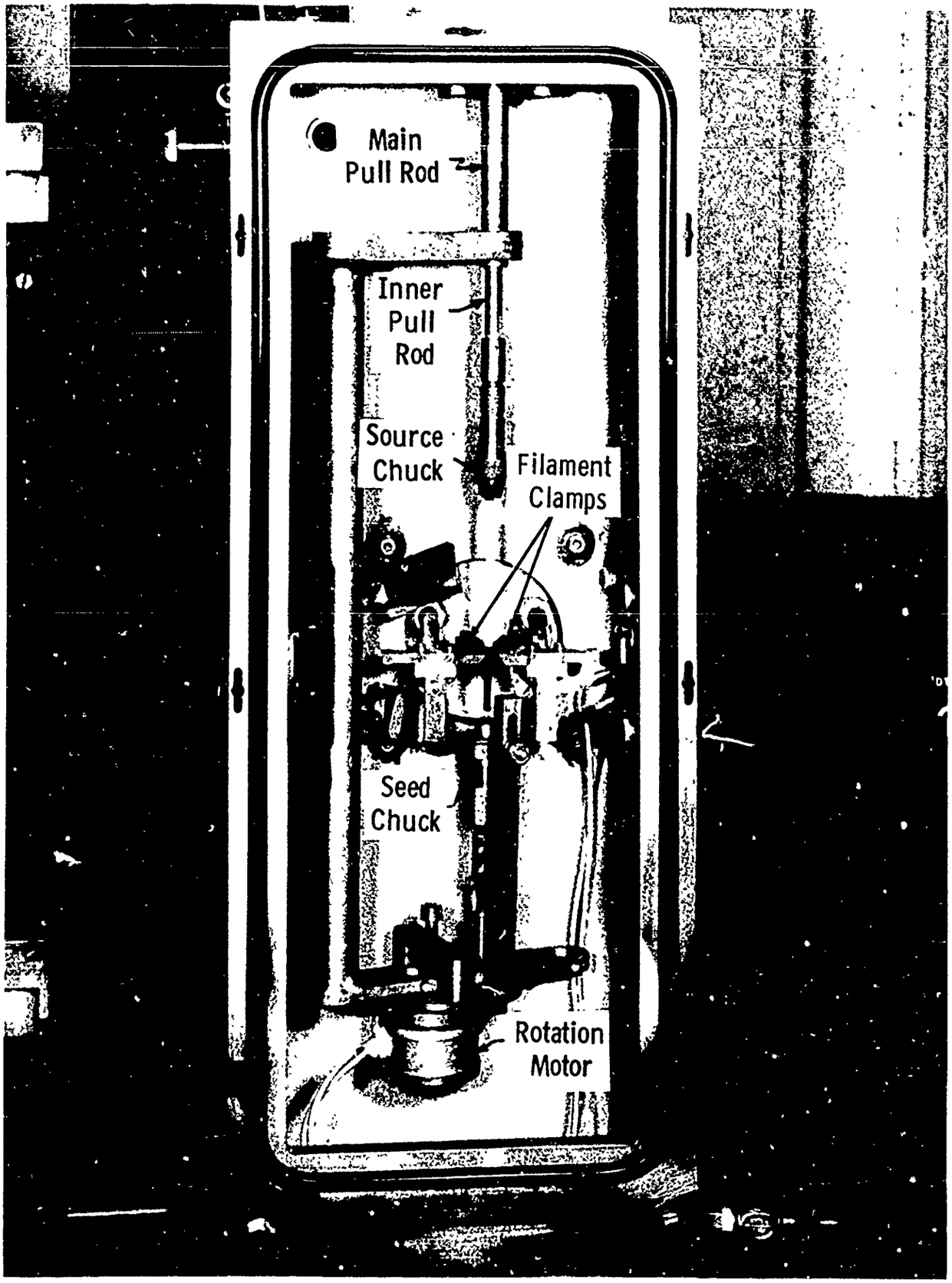
Main
Pull Rod
Inner
Pull
Rod
Source
Chuck
Filament
Clamps
Seed
Chuck
Rotation
Motor

Fig. 6

Dwg. 852A725

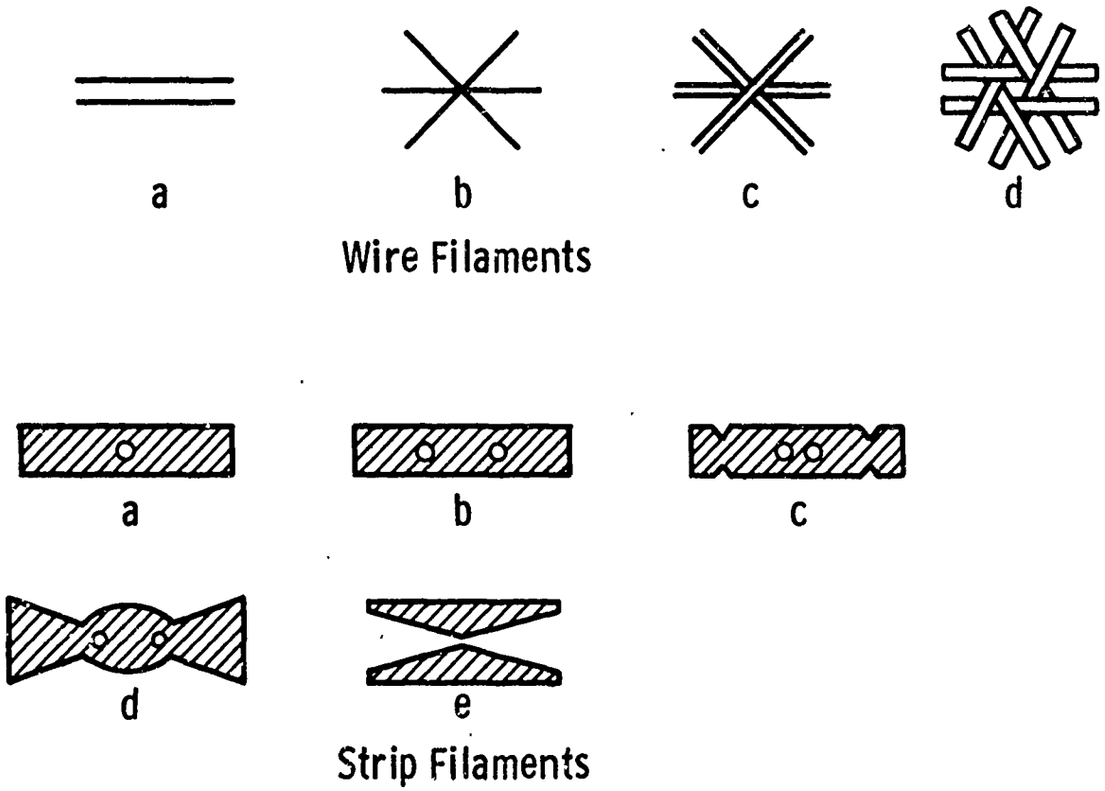

Fig. 7 —Typical filament configurations

Dwg. 852A724

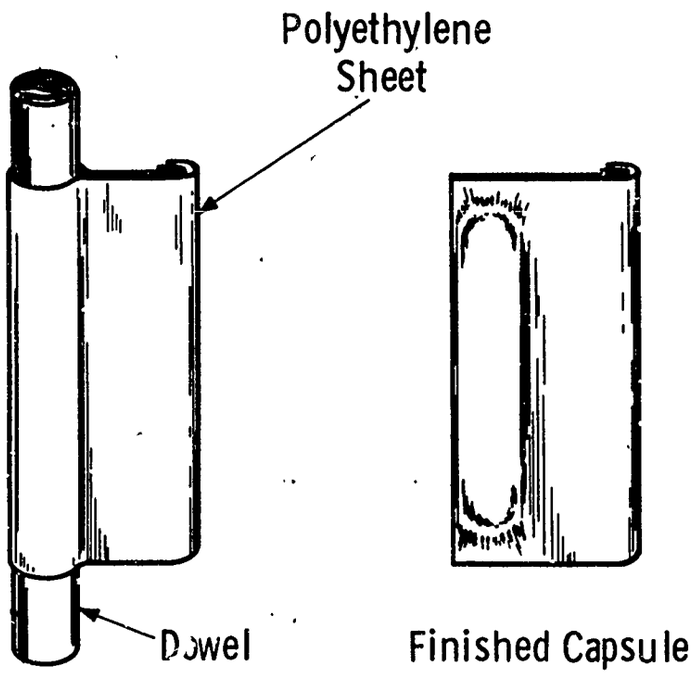

Fig. 8—Polyethylene encapsulation

Dwg. 852A752

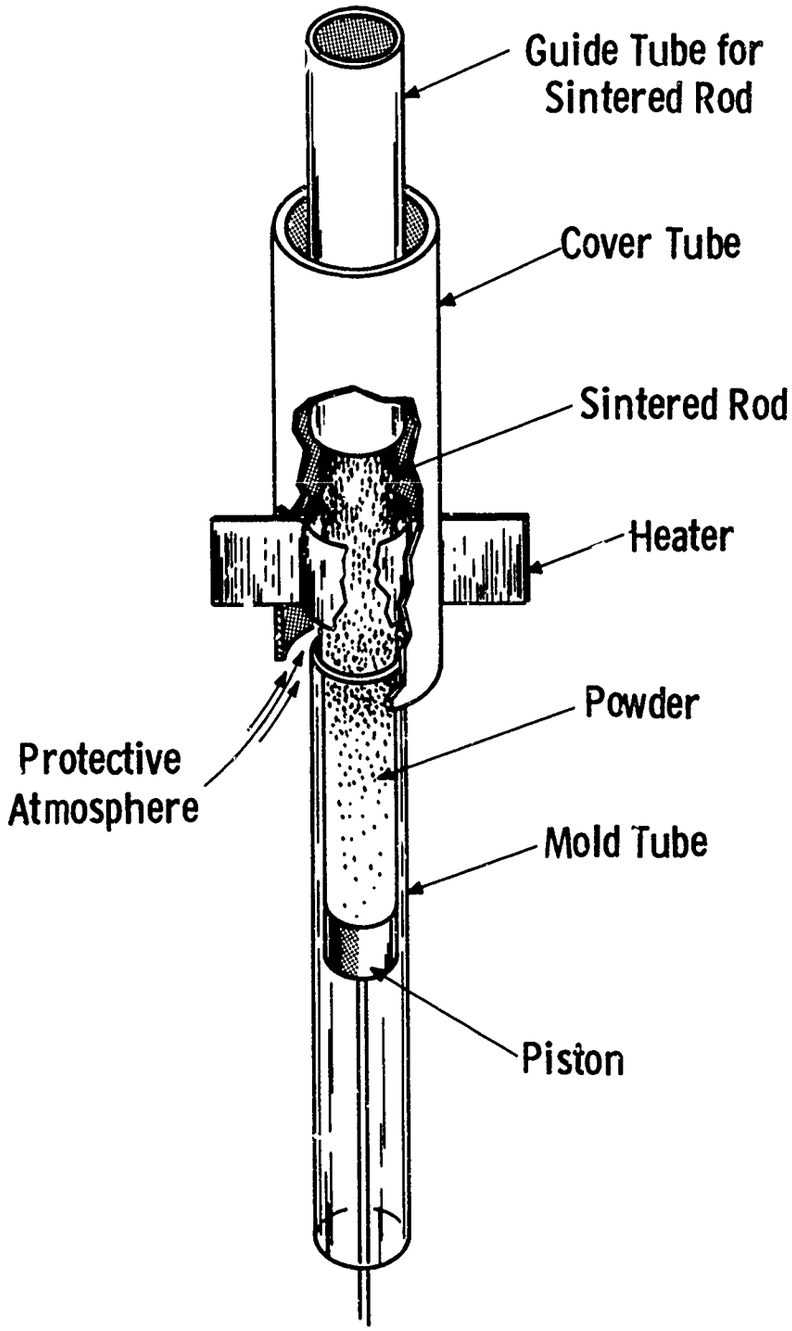

Fig. 9—Zone sintering apparatus

UNCLASSIFIED
Security Classification

DOCUMENT CONTROL DATA - R&D
(Security classification of title, body of abstract and indexing annotation must be entered when the overall report is classified)

1. ORIGINATING ACTIVITY *(Corporate author)*
Westinghouse Electric Corporation
Research and Development Center
Churchill, Pittsburgh, Pennsylvania 15235

2a. REPORT SECURITY CLASSIFICATION
UNCLASSIFIED

2b. GROUP

3. REPORT TITLE
Advanced Crystal Growing Techniques

4. DESCRIPTIVE NOTES *(Type of report and inclusive dates)*
Final Scientific Report - 1 Nov. 1965 through 31 Oct. 1966 Approved 5 Jan 1967

5. AUTHOR(S) *(Last name, first name, initial)*
Seidensticker, R.G., Bennett, A. I., Dr., Hamilton, D.R., Dr.

6. REPORT DATE
January 23, 1967

7a. TOTAL NO. OF PAGES
50

7b. NO. OF REFS
7

8a. CONTRACT OR GRANT NO.
AF19(628)-5722

b. PROJECT AND TASK NO.
5621-01

c. DOD ELEMENT
61445014

d. DOD SUBELEMENT
681301

9a. ORIGINATOR'S REPORT NUMBER(S)
67-9F6-MIOPT-R1

9b. OTHER REPORT NO(S) *(Any other numbers that may be assigned this report)*
AFCRL-66-832

10. AVAILABILITY/LIMITATION NOTICES
DISTRIBUTION OF THIS DOCUMENT IS UNLIMITED.

11. SUPPLEMENTARY NOTES

12. SPONSORING MILITARY ACTIVITY
Hq. AFCRL, OAR (CRW)
United States Air Force
L.G.Hanscom Field, Bedford,Mass. 01730

13. ABSTRACT

This report describes a novel technique for floating zone crystal growth in which a resistively heated filament is immersed directly in the molten zone. Two furnaces employing this technique are described in some detail. Various considerations for the design of the filaments and for the preparation of feed rods are also discussed. Finally, experiments in the growth of apatite, spodumene, $LiNbO_3$, sapphire, KTN and KCl are discussed.

DD FORM 1 JAN 64 1473

UNCLASSIFIED
Security Classification

UNCLASSIFIED

Security Classification

14. KEY WORDS	LINK A ROLE	LINK A WT	LINK B ROLE	LINK B WT	LINK C ROLE	LINK C WT
Crystals, growth, floating zone, filaments, afterheater, furnaces, compaction, apatite, alumina, KTN, lithium niobate, potassium chloride, spodumene.						

INSTRUCTIONS

1. ORIGINATING ACTIVITY: Enter the name and address of the contractor, subcontractor, grantee, Department of Defense activity or other organization *(corporate author)* issuing the report.

2a. REPORT SECURITY CLASSIFICATION: Enter the overall security classification of the report. Indicate whether "Restricted Data" is included. Marking is to be in accordance with appropriate security regulations.

2b. GROUP: Automatic downgrading is specified in DoD Directive 5200.10 and Armed Forces Industrial Manual. Enter the group number. Also, when applicable, show that optional markings have been used for Group 3 and Group 4 as authorized.

3. REPORT TITLE: Enter the complete report title in all capital letters. Titles in all cases should be unclassified. If a meaningful title cannot be selected without classification, show title classification in all capitals in parenthesis immediately following the title.

4. DESCRIPTIVE NOTES: If appropriate, enter the type of report, e.g., interim, progress, summary, annual, or final. Give the inclusive dates when a specific reporting period is covered.

5. AUTHOR(S): Enter the name(s) of author(s) as shown on or in the report. Enter last name, first name, middle initial. If military, show rank and branch of service. The name of the principal author is an absolute minimum requirement.

6. REPORT DATE: Enter the date of the report as day, month, year, or month, year. If more than one date appears on the report, use date of publication.

7a. TOTAL NUMBER OF PAGES: The total page count should follow normal pagination procedures, i.e., enter the number of pages containing information.

7b. NUMBER OF REFERENCES: Enter the total number of references cited in the report.

8a. CONTRACT OR GRANT NUMBER: If appropriate, enter the applicable number of the contract or grant under which the report was written.

8b, 8c, & 8d. PROJECT NUMBER: Enter the appropriate military department identification, such as project number, subproject number, system numbers, task number, etc.

9a. ORIGINATOR'S REPORT NUMBER(S): Enter the official report number by which the document will be identified and controlled by the originating activity. This number must be unique to this report.

9b. OTHER REPORT NUMBER(S): If the report has been assigned any other report numbers *(either by the originator or by the sponsor)*, also enter this number(s).

10. AVAILABILITY/LIMITATION NOTICES: Enter any limitations on further dissemination of the report, other than those imposed by security classification, using standard statements such as:

(1) "Qualified requesters may obtain copies of this report from DDC."

(2) "Foreign announcement and dissemination of this report by DDC is not authorized."

(3) "U. S. Government agencies may obtain copies of this report directly from DDC. Other qualified DDC users shall request through _____."

(4) "U. S. military agencies may obtain copies of this report directly from DDC. Other qualified users shall request through _____."

(5) "All distribution of this report is controlled. Qualified DDC users shall request through _____."

If the report has been furnished to the Office of Technical Services, Department of Commerce, for sale to the public, indicate this fact and enter the price, if known.

11. SUPPLEMENTARY NOTES: Use for additional explanatory notes.

12. SPONSORING MILITARY ACTIVITY: Enter the name of the departmental project office or laboratory sponsoring *(paying for)* the research and development. Include address.

13. ABSTRACT: Enter an abstract giving a brief and factual summary of the document indicative of the report, even though it may also appear elsewhere in the body of the technical report. If additional space is required, a continuation sheet shall be attached.

It is highly desirable that the abstract of classified reports be unclassified. Each paragraph of the abstract shall end with an indication of the military security classification of the information in the paragraph, represented as *(TS), (S), (C), or (U).*

There is no limitation on the length of the abstract. However, the suggested length is from 150 to 225 words.

14. KEY WORDS: Key words are technically meaningful terms or short phrases that characterize a report and may be used as index entries for cataloging the report. Key words must be selected so that no security classification is required. Identifiers, such as equipment model designation, trade name, military project code name, geographic location, may be used as key words but will be followed by an indication of technical context. The assignment of links, rules, and weights is optional.

UNCLASSIFIED

Security Classification