AFML-TR-66-149
PART I

AD 645073

MECHANICS OF COMPOSITE MATERIALS
PART I - INTRODUCTION

STEPHEN W. TSAI

TECHNICAL REPORT AFML-TR-66-149, PART I

JUNE 1966

CLEARINGHOUSE
FOR FEDERAL SCIENTIFIC AND
TECHNICAL INFORMATION

Hardcopy	Microfiche		
$3.00	$.65	48 pp	

ARCHIVE COPY

Distribution of this document is unlimited

AIR FORCE MATERIALS LABORATORY
RESEARCH AND TECHNOLOGY DIVISION
AIR FORCE SYSTEMS COMMAND
WRIGHT-PATTERSON AIR FORCE BASE, OHIO

AFML-TR-66-149
PART I

MECHANICS OF COMPOSITE MATERIALS
PART I - INTRODUCTION

STEPHEN W. TSAI

Distribution of this document is unlimited

FOREWORD

This report covers a portion of the notes prepared for a seminar, "Mechanics of Composite Materials," presented at the Air Force Materials Laboratory in April and May 1966. The work was initiated under Project No. 7340, "Nonmetallic and Composite Materials," Task 734003, "Structural Plastics and Composites." The seminar consisted of Part I - Introduction, and Part II - Mathematical Theory.

The manuscript of this report was released by the author 5 May 1966 for publication as an RTD Technical Report.

This technical report has been reviewed and is approved.

R. T. Schwartz

R. T. SCHWARTZ, Chief
Nonmetallic Materials Division
Air Force Materials Laboratory

ABSTRACT

The principles of mechanics are utilized for the description of the behavior of fiber-reinforced composites. Principal components of elastic moduli and strength for an orthotropic material are established as the intrinsic macromechanical properties. Micromechanics analyses provide a rational design basis of these properties from the material and geometric properties of the constituent materials. A bridge between the properties of the constituent materials and the structural behavior of a laminated anisotropic composite can then be established. Combined materials and structural design becomes feasible. Finally, test methods of composite materials are evaluated. The principles of mechanics can be used to select the material properties to be tested and the appropriate test procedures to be followed.

TABLE OF CONTENTS

SECTION		PAGE
I	MACRO AND MICROMECHANICS OF COMPOSITES	1
	Theory of the Mechanics Approach	1
	Types of Mathematical Models	1
	Stress	2
	Strain	7
II	MACROSCOPIC ELASTIC MODULI	9
	Stress-Strain Relation	9
	Transformation Property	10
	Boron and Glass Composites	12
III	MACROSCOPIC STRENGTH	15
	Strength Criteria	15
	Mechanics Approach	18
IV	MICROMECHANICS	20
	A General Definition	20
	Mathematical Formulation	20
	Axial Properties	21
	Transverse Properties	24
	Shear Properties	31
	Interlaminar Properties	35
V	TEST METHODS	37
	Intrinsic and Intensive Properties	37
	Saint Venant's Principle	38
	Nonhomogeneous Stresses	38
	Existing Test Methods	38

ILLUSTRATIONS

FIGURE		PAGE
1.	A Vector in a Coordinate System	2
2.	Coordinate Transformation of a Vector	3
3.	A Practical Example of Coordinate Transformation	4
4.	Stress Components and Coordinate Transformation	5
5.	Strain Rosettes	[illegible]
6.	Equivalent Transformations	11
7.	Boron and Glass Composites	13
8.	Determination of Principal Strengths	16
9.	Uniaxial Strength Criteria	18
10.	Idealized Fiber Packing	25
11.	Deformation of the Elemental Square	2[illegible]
12.	Transverse Stiffness	28
13.	Microscopic Stress Induced by Hydrostatic Pressure	30
14.	Shear Stresses	32
15.	Longitudinal Shear Modulus	34
16.	Interlaminar Stresses	35
17.	Cantilever Beam	36

TABLES

TABLE		PAGE
I	Principal Elastic Moduli	12
II	Bundle Strength	22
III	Matrix and Transverse Properties	25

SECTION I

MACRO AND MICRO MECHANICS OF COMPOSITES

THEORY OF THE MECHANICS APPROACH

The purpose of this report is to introduce the basic principles of mechanics and their relevance to composite materials. The work is planned for workers in the field of composite materials who are not interested in the rigorous mathematic derivation of the principles of classical mechanics. A basic understanding of the mechanics approach to composite materials is indispensible because most composite materials are designed for structural applications.

Mechanics of materials is concerned with the distributions of stress and strain in a body when external loads are applied to it. From the knowledge of the stress and strain, the strength and deflection of a structural member may be determined. The cases of uniaxial tension or compression of a bar and pure bending of a beam are very easy to understand. For these simple cases, the meanings of stress, strain, displacement, and strength are unambiguous. These terms, however, have more general and precise definitions for cases other than simple loading, but their generalization involves some conceptual difficulty. In the cases of composite materials, these basic terms in a generalized context have sometimes been improperly used. It is the intent of these notes to illustrate the application and usefulness of the mechanics approach to solve the problems of design and utilization of composite materials.

Materials can be viewed with different levels of magnification. Although, the common composite materials and metals appear homogeneous, with 10^2 to 10^3 magnifications, individual fibers and crystals become visible. With greater magnifications, molecular and lattice structures may be revealed. These facts are of particular importance in the mechanics analysis, which in general requires a mathematical model. The model is intended to depict a behavior of an actual material. Since the mathematical representation of the actual material depends on the level of visual magnification, the mathematical model deduced from it will be directly affected.

A material may be represented by a model consisting of a continuous medium, or discrete bodies interconnected by various means. For a continuous medium, a spring or dashpot is often used to represent elastic or viscous materials, respectively.

TYPES OF MATHEMATICAL MODELS

For composite materials, it is convenient to use two different but interrelated mathematical models.

The first model is constructed on the macroscopic scale; this corresponds to the case with no magnification. On this scale, a composite material is treated as a homogeneous material. The actual fibers, their orientation and packing arrangement, the lamination, and the binding matrix are all indistinguishable by the unaided eyes. The stiffness and strength of this material can be characterized by making a number of tests from which gross or macroscopic properties are determined. Once these property data are known, macromechanics analysis will supply answers as to the load-carrying capacity and stiffness of a structure consisting of this material.

Macromechanical analysis is nothing more than the classical structural analysis, except in the case of composite materials, where the material properties are controllable and are presumably designed with a purpose. The stiffness and strength can be varied not only in magnitudes but in directions as well.

The other mathematical model frequently used in composite materials is the m mechanical model. This model requires magnification sufficient to cause its individual i to be visible. The actual material with this level of magnification can no longer be homogeneous; both the existence of fibers and the matrix must be included in the mathem model. In fact, the cross-sectional shapes and the packing arrangement of the fibers, a relative volumes of the constituent materials must all be properly represented.

As an approximate distinction, macromechanics deals with composite materials on the of 10° inch; micromechanics, 10^{-3} inch. The usual mathematical model for macromech is an in-plane homogeneous, transversely heterogeneous (due to lamination), and anisot (due to fiber orientation) medium; for micromechanics, a heterogeneous, isotropic me (The problem of interface is considered sub-microscopic, where molecular interact visible. In the present mechanics analysis, sub-micromechanics is not treated.)

The basis for the separation of macro and micromechanics is a matter of choice. this separation, existing knowledge of macromechanics, e.g., the theory of plates and s can be directly utilized. The selection of a proper combination of constituent materials concern of micromechanics. With this framework of macro and micromechanics, the relation between the two approaches can be linked by a mathematical equation. This connecting equation, which will be explored later, provides a logical perspective f mechanics analysis of composite materials.

In the remaining part of this section, the definitions of a number of basic terms and relevance to composite materials will be described, since composites are our pri interest.

STRESS

Stress is a measure of internal forces in a continuous medium. Stress is difficult to u stand because it is a tensor which is a mathematical entity one step beyond a vector. T parallel to the case of a vector which can be treated as an entity one step beyond a scal we start from the most basic entity, the scalar, it possesses magnitude only. Mass, perature, length, and speed are examples of scalars. Each one is described completely numerical value in some physical unit; e.g., 3 grams, 10°F, 2 inches and 35 mph, respecti A vector is more complicated than a scalar because an additional characterization is requ An orientation (or direction) is required in addition to the magnitude. Weight, temper gradient, displacement, and velocity are examples of vectors. Each one is described magnitude (3 lbs, 10°F/in., 2 inches, and 35 mph) and a direction.

The direction of a vector can best be described in a coordinate system as in Fig

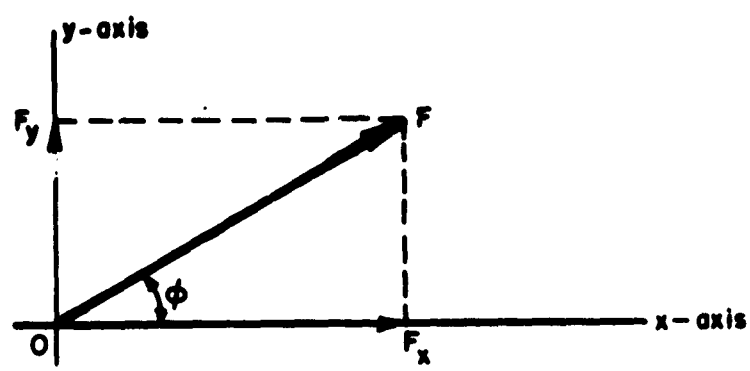

Figure 1. A Vector in a Coordinate System

A vector F can be resolved into two components F_x and F_y, along the x and y coordinate axes. From simple trigonometry:

$$F_x = F \cos \phi \tag{1}$$

$$F_y = F \sin \phi \tag{2}$$

So far, there is no conceptual difficulty. The resolution of a vector into two or more vectors may be performed without hesitation. The next conceptual exercise deals with coordinate transformations, which is required for the understanding of vectors and tensors of higher ranks.

It should be recognized that the choice of a reference coordinate system is perfectly arbitrary. For vector F in Figure 1, other equally valid coordinate systems can be used. This is shown in Figure 2.

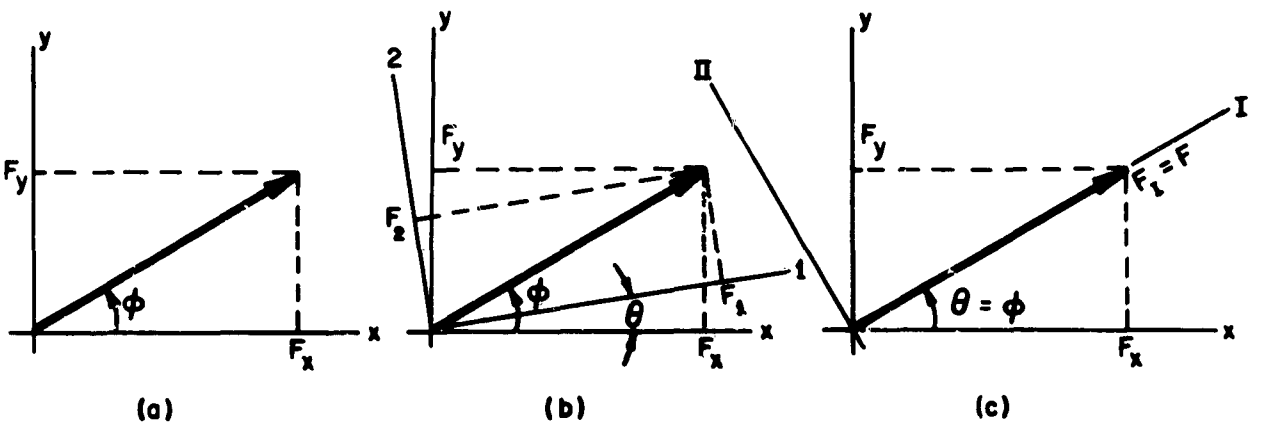

Figure 2. Coordinate Transformation of a Vector

Figure 2(a) is identical to Figure 1. In Figure 2(b), a new reference coordinate system 1-2 is used. The angle between the 1-axis and the original x-axis is θ. The components of F in the new (or transformed) coordinate system are F_1 and F_2 with the following relations:

$$F_1 = F \cos (\phi - \theta) \tag{3}$$

$$F_2 = F \sin (\phi - \theta) \tag{4}$$

But,

$$\cos (\phi - \theta) = \cos\phi \cos\theta + \sin\phi \sin\theta \tag{5}$$

and

$$\sin(\phi - \theta) = \sin\phi \cos\theta - \cos\phi \sin\theta \tag{6}$$

Substitute (5) and (6) into (3) and (4), respectively, and then use relations of (1) and (2) to obtain:

$$F_1 = F_x \cos\theta + F_y \sin\theta = mF_x + nF_y \tag{7}$$

$$F_2 = F_y \cos\theta - F_x \sin\theta = -nF_x + mF_y \tag{8}$$

where $m = \cos\theta$, $n = \sin\theta$. Equations (7) and (8) are known as the transformation equa of a vector. They give the new components F_1 and F_2 as functions of the original F_x an and the angle of rotation θ. The reference coordinate system is transformed from x-y t by a rotation of θ.

If $\phi = \theta$ from (3) and (4) we obtain:

$$F_I = F \qquad F_{II} = 0$$

This is shown in Figure 2(c). Now the transformed coordinate system is I - II, instead o The same result can be obtained from (7) and (8) by letting

$$F_y / F_x = \sin\phi / \cos\phi = \sin\theta / \cos\theta = n / m$$

Substituting this into (7) and (8), we obtain:

$$F_I = mF_x + nF_y = \left[m + (n^2/m) \right] F_x = F_x / m = F$$

$$F_{II} = -nF_x + mF_y = (-n + n)\, F_x = 0$$

The last step in (11) required (1) and $\phi = \theta$. In the I-II coordinate system, the compone and F_{II} reach maximum and minimum values, respectively. The orientation of this syst called the principal direction, which is characteristic of vectors and other tensors.

As a simple example of reference coordinate systems, Figure 3 shows that we are tr toward Columbus at 100 mph, as shown by a vector F in coordinate system x-y, $F_x = F = 100$, $F_y = 0$.

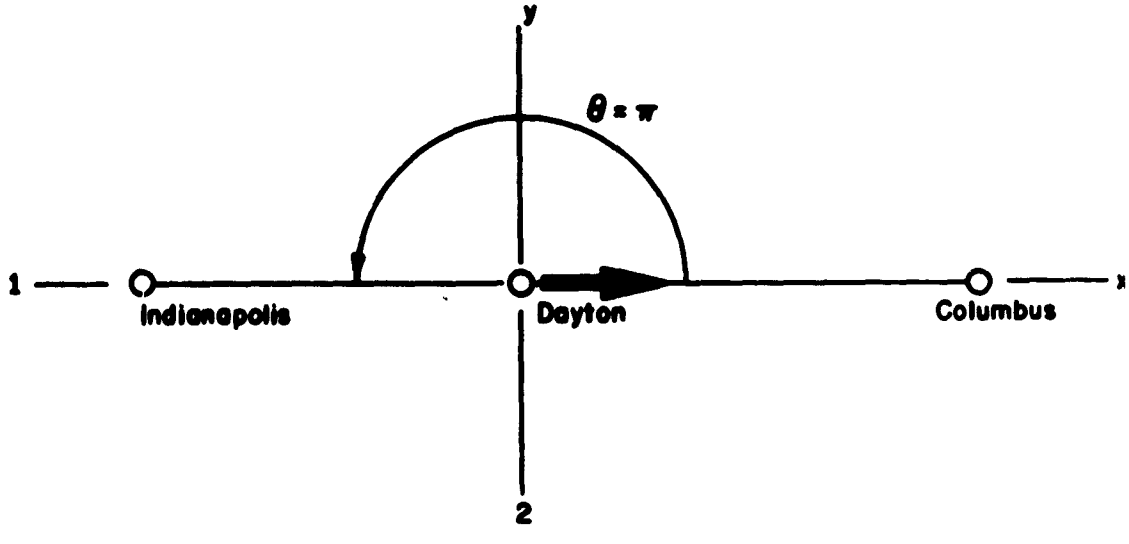

Figure 3. A Practical Example of Coordinate Transformation

If we transform to system 1-2, we may obtain it by putting $\theta = \pi$ in (7) and (8); the results are:

$$F_1 = -F_x \tag{13}$$

$$= -F = -100 \text{ mph} \tag{14}$$

$$F_2 = 0 \tag{15}$$

which states that for the same vector F_x (going toward Columbus), the vector becomes $-F_1$ in the 1-2 system, which means that we are going away from Indianapolis at the same speed. A coordinate transformation can be regarded as a change in reference system, in this case, from Columbus to Indianapolis.

What is stress? It is incorrect to say that stress is P/A. Stress, by definition, is a tensor. A tensor is defined by its peculiar transformation equations. They are different from those for a vector, shown in (7) and (8). In two dimensions, a stress tensor has four components, of which two shear stresses are assumed to be equal (a symmetric tensor); thus, a stress tensor has three independent components, i.e., σ_x, σ_y, and σ_s. A vector, as illustrated previously, has two components in a two-dimensional space, i.e., F_x and F_y. Only in a special case, such as a uniaxial tension, is the normal component of stress, σ_x, equal to P/A.

We can easily develop the transformation equation for stress, similar to (7) and (8) for a vector. The resulting equations are:

$$\sigma_1 = m^2 \sigma_x + n^2 \sigma_y + 2mn\sigma_s \tag{16}$$

$$\sigma_2 = n^2 \sigma_x + m^2 \sigma_y + 2mn\sigma_s \tag{17}$$

$$\sigma_6 = -mn\sigma_x + mn\sigma_y + (m^2 - n^2)\sigma_s \tag{18}$$

The relation between coordinates x-y, 1-2, and I-II is the same as that shown in Figure 2 and is repeated in Figure 4.

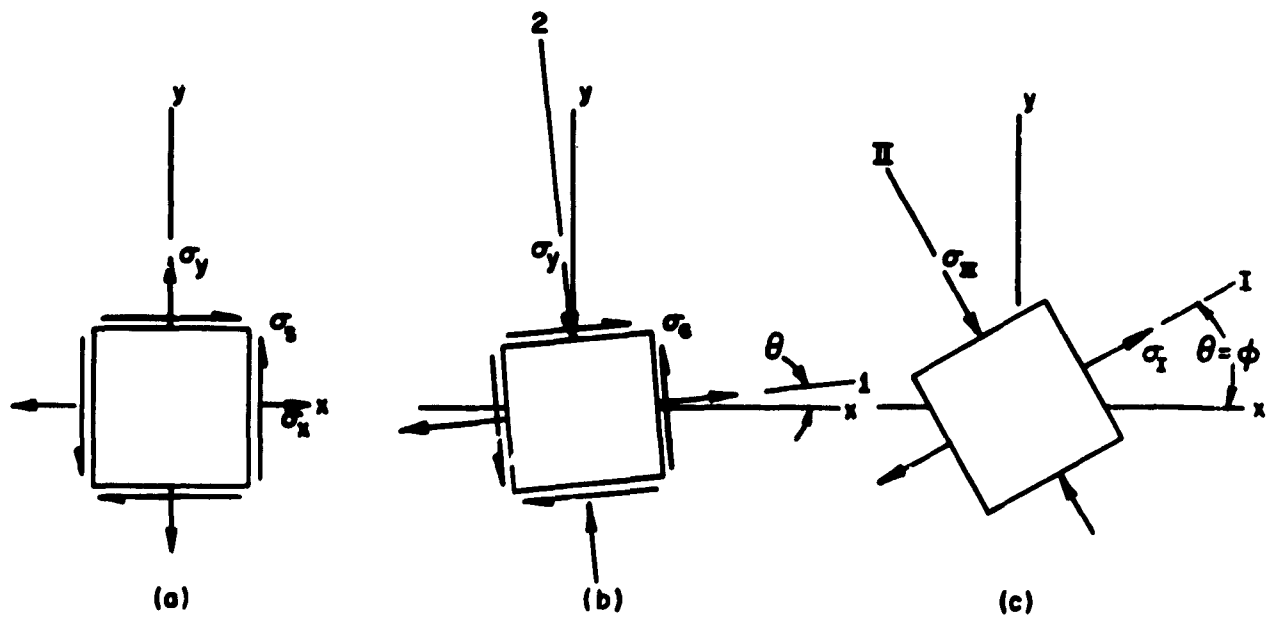

Figure 4. Stress Components and Coordinate Transformation

Equations (16), (17), and (18) show the relations among the stress components of refere coordinate systems x-y and 1-2. By letting $\sigma_6 = 0$ in (18), we can solve for an angle of ori tation ϕ from

$$\tan 2\phi = \frac{\sigma_s}{2(\sigma_x - \sigma_y)}$$

This is called the principal direction, for which $\sigma_6 = 0$, $\sigma_1 = \sigma_I$, and $\sigma_2 = \sigma_{II}$, when σ_I σ_{II} reach maximum and minimum values.

As the reference system changes, the stress components will change accordingly. Thu describing a state of stress in a body, we must refer to a particular reference coordi system. For vectors, a reference system must also be specified. But for scalars, the by definition, independent of the reference system, and they are invariant.

Instead of being P/A, stress is defined by (16), (17), and (18). This is similar to the cas a vector defined by (7) and (8). The physical significance of stress can be illustrated by normal components σ_x and σ_y and shear component σ_s. The normal components ar for that tend to extend or compress a body. Positive normal stress is usually assigned to e sional forces; negative stress, compressive forces. Shear stress is associated with tortional forces. Normal stresses may also be related to forces that tend to change the vol of a body; while the shear stress, the shape.

A uniaxial or simple state of stress can be defined as a state of stress of having only nonzero stress component. A state of simple tension or compression, as represented by σ_x or $\sigma_y \neq 0$, and pure shear $\sigma_s \neq 0$ are examples of simple stresses. A multiaxial, comb. or complex state of stress exists when two or more stress components are not zero. For two-dimensional case, all three independent stress components may be present. Homogene stress is a uniform state of stress throughout the entire body. The stress is independen location. Several examples of the state of stress will now be cited. The uniaxial tension bar will produce a state of stress both homogeneous and uniaxial (simple). The hydrost pressure applied to a body of arbitrary shape will produce a homogeneous but multiaxial s of stress. The pure bending of a beam will produce a uniaxial (tension or compression) nonhomogeneous state of stress. The nonhomogeneity is caused by the change in stress al a transverse plane of a beam. A cantilever beam supporting a transverse load will prod both an inhomogeneous and a complex state of stress. The transverse load will produc shear stress across the beam. The state of stress will have both normal and shear compone thus making it complex.

The state of stress as being simple or complex, homogeneous or nonhomogeneous i fundamental importance to the determination of material properties. For composite materi methods for property determination or quality control are in general more complicated t for homogeneous materials. At the same time, an understanding of the difference betw macro and micromechanics must also be clear. A state of stress on the macroscopic sc may be both simple and homogeneous; this can be achieved by imposing a uniaxial load c unidirectional composite. The same loading will, in general, induce a state of stress t complex and nonhomogeneous on the microscopic scale. In fact a complex state of stres always present on the microscopic scale because of the complicated interaction between constituent materials.

STRAIN

Strain is a measure of the dimensional change in a body. It is also a tensor, which, by definition, transforms according to (16), (17), and (18), except for one minor modification of a factor of 1/2 in the shear strain component.

$$e_1 = m^2 e_x + n^2 e_y + (mne_s/2) \tag{20}$$

$$e_2 = n^2 e_x + m^2 e_y - (mne_s/2) \tag{21}$$

$$e_6/2 = -mne_x + mne_y + \left[(m^2 - n^2)e_s/2\right] \tag{22}$$

The physical significance of the normal components of strain, e_x and e_y, can be illustrated as a measure of unit extension or contraction along the x and y axes, respectively. The shear strain e_s is a measure of distortion which is the change of an original right angle to an oblique angle.

Similar to the case of stress (a symmetric tensor), strain at each point within a continuous medium is completely specified by three independent strain components. What the magnitudes of these strain components are depends on the reference coordinate system. As the reference coordinates change, the strain components change according to (20), (21), and (22).

The strain at a particular point may be simple, complex, or in its principal direction, for which the shear strain is zero. The strain, like stress, may be homogeneous, i.e., constant throughout a body, or nonhomogeneous. As a simple and useful exercise, the strain at a point can be determined by three independent measurements. This is often done by using a three-element strain rosette with either 0° -45° -90° or 0° -60° -120° orientations for the individual strain gages. The problem is the reduction of these strain gage readings to a state of strain relative to some coordinate systems. Let the x-axis run parallel to the 0° gage, as shown in Figure 5.

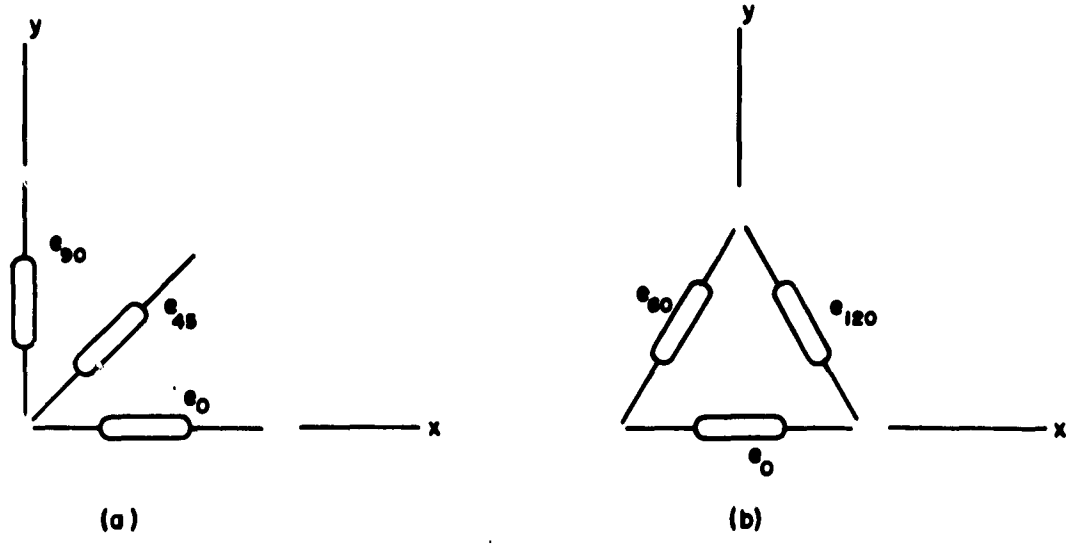

Figure 5. Strain Rosettes

For the first rosette, as shown in Figure 5(a), we can obtain the following results from (20

1) For $\theta = 0°$, $m = 1$, $n = 0$; hence $e_x = e_0$

2) For $\theta = 90°$, $m = 0$, $n = 1$; hence $e_y = e_{90}$ (2

3) For $\theta = 45°$, $m = n = 1/\sqrt{2}$; hence $e_s = 2e_{45} - e_0 - e_{90}$

For the rosette in Figure 5(b), we again obtain from (20):

1) For $\theta = 0°$, $m = 1$, $n = 0$;
hence $e_x = e_0$

2) For $\theta = 60°$, $m = \sqrt{3}/2$, $n = 1/2$; (2
hence $e_{60} = (3e_x + e_y + \sqrt{3}e_s)/4$

3) For $\theta = 120°$, $m = \sqrt{3}/2$, $n = -1/2$;
hence $e_{120} = (3e_x + e_y - \sqrt{3}e_s)/4$

From these simultaneous equations, we obtain:

$$e_x = e_0$$

$$e_y = 2(e_{60} + e_{120}) - 3e_0 \qquad (2$$

$$e_s = 2(e_{60} - e_{120})/\sqrt{3}$$

Once the state of strain as expressed in (23) or (25) is known, strain for other reference coor dinates can be obtained directly from (20), (21) and (22).

SECTION II

MACROSCOPIC ELASTIC MODULI

STRESS-STRAIN RELATION

The stress-strain relation is an equation that describes the mechanical constitution of a material. For this reason, the stress-strain relation is one form of a general constitutive equation. On the macroscopic scale, the governing constitutive equation for a unidirectional composite can be described as follows:

$$\begin{aligned} \sigma_1 &= (e_1 + v_{21}\, e_2)E_{11} / (1 - v_{12}\, v_{21}) \\ \sigma_2 &= (v_{12}\, e_1 + e_2)E_{22} / (1 - v_{12}\, v_{21}) \\ \sigma_6 &= G e_6 \end{aligned} \tag{26}$$

The same equations can be expressed in an inverted form:

$$\begin{aligned} e_1 &= (\sigma_1 - v_{12}\, \sigma_2)/E_{11} \\ e_2 &= (-v_{21}\, \sigma_1 + \sigma_2)/E_{22} \\ e_6 &= \sigma_6 / G \end{aligned} \tag{27}$$

These stress-strain relations represent a macroscopically homogeneous and orthotropic material which can be applied to plate-form unidirectional composites.

The definitions of the elastic moduli are as follows:

E_{11} = axial stiffness (in the direction of fibers)

E_{22} = transverse stiffness (transverse to fibers)

v_{12} = major Poisson's ratio (transverse contraction due to an axial extension)

v_{21} = minor Poisson's ratio (axial contraction due to a transverse extension)

G = shear modulus

The major and minor Poisson's ratio are related by a reciprocal relation:

$$v_{12} / E_{11} = v_{21} / E_{22} \tag{28}$$

There are four independent elastic constants. For isotropic material, on the other hand, there are only two independent constants. The isotropic material can be seen as a special case of the orthotropic material if:

$$\begin{aligned} E_{11} &= E_{22} = E \\ v_{12} &= v_{21} = v \\ G &= E / 2(1 + v) \end{aligned} \tag{29}$$

Substituting these relations into (27), the stress-strain relations for an isotropic ma become:

$$e_1 = (\sigma_1 - v\sigma_2)/E$$

$$e_2 = (-v\sigma_1 + \sigma_2)/E$$

$$e_6 = 2(1+v)\sigma_6/E$$

For isotropic materials, we have only to determine two elastic moduli, say, Y modulus E and Poisson's ratio v. The shear modulus G can be computed from E using (29). The bulk modulus K can also be computed from the relation K = E/3(1

For orthotropic materials, there are four independent elastic moduli. For propert more tests are required than for the isotropic material; e.g., shear modulus must be independently and it cannot be computed from knowing E_{11}, v_{12}, and E_{22}.

TRANSFORMATION PROPERTY

Isotropy of a material property (for the present case we are concerned with the stiff a material) implies that the stiffness is independent of the orientation of the material. it more precisely, isotropy of a property implies that this property is invariant unde dinate transformation. This condition is satisfied if the material constants in a consti equation are scalars. Equation (30) satisfies the condition of isotropy; E and v are sc

Orthotropic material is a simple type of anisotropic material that possesses three orth planes of material symmetry. A unidirectional composite can be represented, on the m scopic scale, by an orthotropic material because planes parallel and perpendicular fibers are planes of symmetry.

As stated before, the number of independent elastic constants is four for a plate- orthotropic material. The material constants in equations (26) through (27) are no l scalars. They are not invariant. Thus, when the reference coordinate system changes, s the elastic moduli. In fact, the elastic moduli of an orthotropic or anisotropic mater general can be defined by a tensor of the fourth rank, which is two steps beyond the s tensor (of the second rank). As we have seen earlier, for each rank of tensor there appropriate set of equations that governs its transformation property. For vectors (belong to a tensor of the first rank) the transformation is governed by (7) and (8). For s tensors (of the second rank) the transformation is described by (16), (17), and (18). For f rank tensors, the following set of equations will govern the transformation:

$$\frac{1}{E'_{11}} = \frac{m^4}{E_{11}} + \left(\frac{1}{G} - \frac{2v_{12}}{E_{11}}\right) m^2 n^2 + \frac{n^4}{E_{22}}$$

$$\frac{1}{G'} = \frac{1}{G} + 4\left(\frac{1+v_{12}}{E_{11}} + \frac{1+v_{21}}{E_{22}} - \frac{1}{G}\right) m^2 n^2$$

$$v'_{12} = E'_{11}\left[\frac{v_{12}}{E_{11}} - \left(\frac{1+v_{12}}{E_{11}} + \frac{1+v_{21}}{E_{22}} - \frac{1}{G}\right) m^2 n^2\right]$$

$$n'_{12} = E_{11}\left[-\frac{2mn}{E_{11}} + \frac{2mn}{E_{22}} + \left(\frac{1}{G} - \frac{2v_{12}}{E_{11}}\right)(m^2 - n^2)\, mn\right]$$

where primes indicate the transformed axial stiffness (E'_{11}), shear modulus (G'), major Poisson's ratio (v'_{12}), and major shear coupling factor (n'_{12}).

These equations indicate that all the elastic moduli of an orthotropic material change with the orientation of the reference coordinate axes 1-2, or the material symmetry axes x-y. This is illustrated in Figure 6.

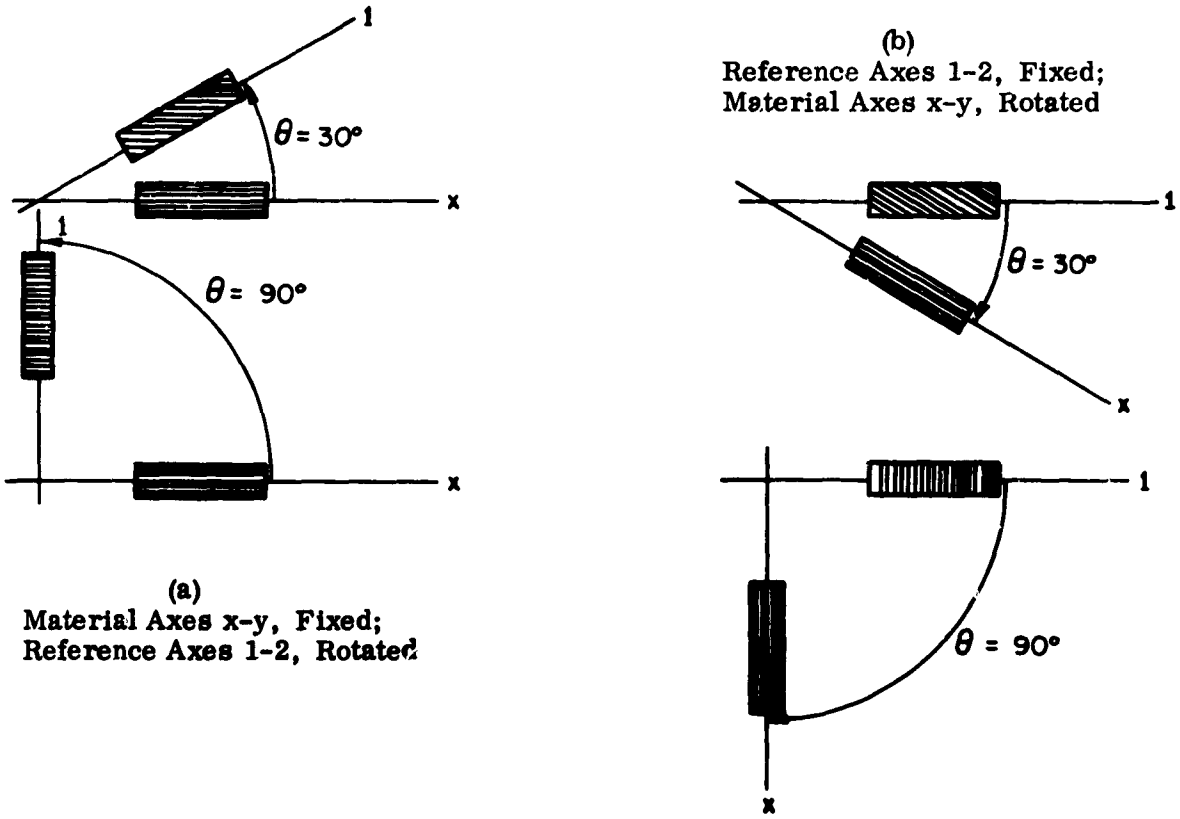

Figure 6. Equivalent Transformations

Figure 6(a) represents positive rotations of the reference coordinate system, designated by axes 1-2. Figure 6(b) represents negative rotations of the material symmetry axes x-y, of which the x-axis corresponds to the fiber axis. These two transformations are equivalent and the resulting transformed properties, as shown in Equation (31), are applicable to both transformations. In short, for a coordinate transformation, we can either rotate the reference system (1-2) in one direction or the material system (x-y) in the opposite direction.

Equation (29) shows the relationships between the orthotropic and the isotropic moduli. By substituting those relationships into (31), we obtain, respectively, values as given in Equation 32. Thus, for isotropic materials, E, v, and G are independent of the angle of rotation, or they are invariant. The shear coupling factor n is identically zero which must be the case for isotropic materials.

$$\frac{1}{E'_{11}} = \frac{m^4}{E} + \left(\frac{2(1+\nu)}{E} - \frac{2\nu}{E}\right) m^2 n^2 + \frac{n^4}{E}$$

$$= \frac{(m^2+n^2)^2}{E} = \frac{1}{E}$$

$$\frac{1}{G'} = \frac{1}{G} + 4\left(\frac{1+\nu}{E} + \frac{1+\nu}{E} - \frac{2(1+\nu)}{E}\right) m^2 n^2$$

$$= \frac{1}{G}$$

$$\nu'_{12} = E\left[\frac{\nu}{E} - \left(\frac{1+\nu}{E} + \frac{1+\nu}{E} - \frac{2(1+\nu)}{E}\right) m^2 n^2\right]$$

$$= \nu$$

$$\eta_{12} = E\left[-\frac{2m^3 n}{E} + \frac{2mn^3}{E} + \left(\frac{2(1+\nu)}{E} - \frac{2\nu}{E}\right) mn\,(m^2 - n^2)\right]$$

$$= 0$$

BORON AND GLASS COMPOSITES

Numerical examples of the transformation property of boron-epoxy (solid lines) and g epoxy (dashed lines) are shown in Figure 7. The basic input data to (31) are as given in T

TABLE I

PRINCIPAL ELASTIC MODULI

Moduli	Boron Composite	Glass Composite
E_{11}	40.0×10^6 psi	8.00×10^6 psi
E_{22}	4.0×10^6 psi	2.70×10^6 psi
ν_{12}	0.25	0.25
G	1.5×10^6 psi	1.25×10^6 psi

These unidirectional composites have an approximate fiber volume of 65 percent. All th are the results of actual experimental measurements. They are not predicted from the m mechanics analysis, although excellent agreement between the theoretical predictions a data in the table does in fact exist.

The predicted transformation property of the elastic moduli for both composites reasonably well with actual experimental data. These properties can be determined e mentally as shown in the following discussion.

Take a unidirectional composite and cut a tensile coupon with 30° fiber orientatio example. The specimen will look like the one shown in Figure 6 for $\theta = 30°$. Bond a t element strain rosette, like that shown in Figure 5(a) with the elements oriented 0°-45 to the tensile coupon with the 0° element parallel to the direction of the uniaxial load along the 1-axis in Figure 6. Under uniaxial tensile lo d, the state of strain relative

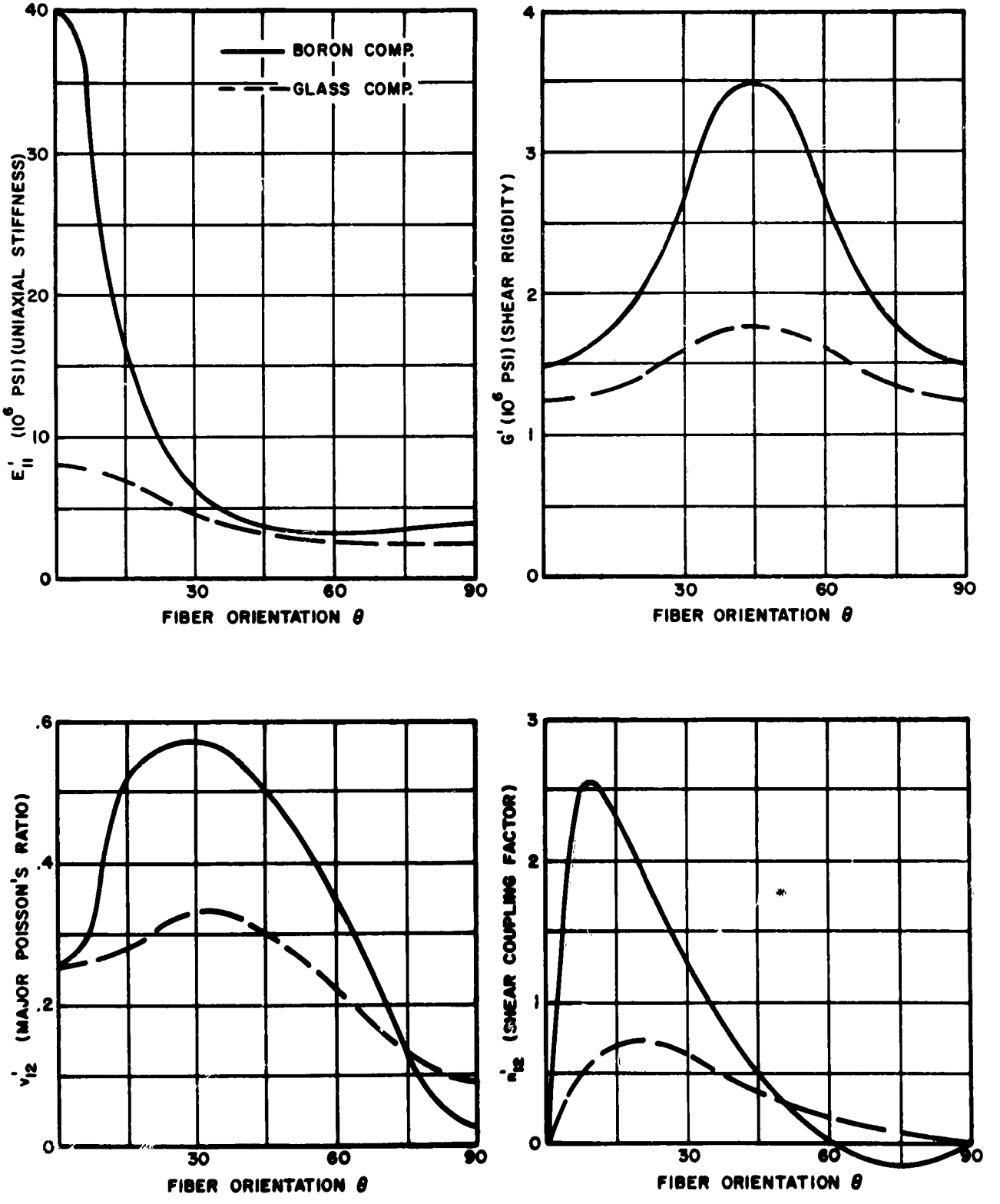

Figure 7. Boron and Glass Composites

1-axis will be complex, meaning that all three strain components will not be zero. By u the relation in (23), strain components e_1, e_2, and e_6, which correspond to e_x, e_y, an respectively, in (23), can be computed directly from e_0, e_{45}, and e_{90} for a given lev uniaxial stress σ_1 (for this case $\sigma_2 = \sigma_6 = 0$). The following elastic moduli can now be termined directly:

$$E'_{11} = \sigma_1 / e_1$$

$$v'_{12} = e_2 / e_1$$

$$n'_{12} = e_6 / e_1$$

The determination of G' for a fiber orientation of 30° can be achieved by twisting a sq plate which is made of the same composite material and has the same fiber orientation a tensile coupons.

Figure 7 shows that for orthotropic materials all elastic moduli vary drastically as a fu of fiber orientation. For isotropic materials, all the elastic moduli E, v, or G will be horiz lines across the graph. This means that the moduli are invariant. The condition tha Poissons's ratio cannot be greater than 1/2 applies only to isotropic materials. It is not ap cable to orthotropic materials. In fact, for $\theta = 30°$, the major Poisson's ratio for boron posite is more than 1/2. This is predicted theoretically from the transformation equation ir and has been experimentally verified as well.

The importance of the experimental verification of the curves shown in Figure 7 is two First, the boron and glass composites are shown to be orthotropic; secondly, the el moduli are shown to be a tensor of the fourth rank. Both conclusions are important i pendently because a material property can be orthotropic but not a fourth rank tensor. thermal expansion coefficients of unidirectional composites, e.g., are orthotropic and a se rank tensor, like stress. Then the governing transformation equation will be (16), (17), and instead of (31).

The elastic moduli of a laminated composite consisting of layers of orthotropic mate can be theoretically derived. The number of independent elastic moduli increases from for the unidirectional composite to 18 for the laminated composite. But the concept of or tropy and the governing transformation equation remains the same.

SECTION III

MACROSCOPIC STRENGTH

STRENGTH CRITERIA

Macroscopic strength, like macroscopic elastic moduli, is based on a phenomenological approach. Measurements of stiffness and strength are experimentally determined and no reference is made to the actual mechanisms of deformation and failure on the microscopic scale. This approach may sound unsophisticated but it is normal procedure for the property determination of most materials. Gross properties of metals are usually measured rather than predicted from a model of lattice distortion or the propagation of dislocations. Until a reliable model for the microscopic mechanism is developed, the phenomenological approach will remain in use.

The strength of a unidirectional composite is considerably more complicated than the elastic moduli. A satisfactory strength theory must take into account the anisotropy of the composite materials and the behavior of the material under complex states of stress and strain. If we restrict the strength theory to a plate-form material, a state of two-dimensional stress (plane stress) is reasonably accurate. There are three components each for the stress and strain tensors. For simple loading, we can establish three strength properties, two normal strengths and one shear strength, corresponding to the components of stress, σ_x, σ_y, and σ_s, or strains, e_x, e_y, and e_s. It is convenient to refer the normal and shear strengths to the material symmetry axes. This means that the normal strengths are the axial and transverse strengths, X and Y, in the case of a unidirectional composite. The shear strength, S, is associated with the in-plane shear stress or strain, σ_s or e_s. These principal strengths may be experimentally determined from the stress-strain relations. In Figure 8 we show typical experimental results of glass-epoxy composites.

The crucial question is the existence of a strength criterion that can describe the strength of a unidirectional composite under combined or complex loading or straining, as illustrated in the upper right-hand corner of Figure 8. This strength criterion, hopefully, can be related to the three principal strengths X, Y, and S. If a strength criterion can be found, the strength of both unidirectional and laminated composites for an arbitrary orientation of the material axes can be readily deduced from the transformation property of stress or strain components.

A few of the most common strength criteria for homogeneous materials will now be discussed. We hope that generalizations of these criteria will produce suitable ones for composite materials. The most common strength criteria are based on some maximum levels of stress, strain, or distortional work. A generalized strength criterion that automatically takes into account the anisotropy of strength can be obtained by the use of dimensionless stress or strain components as the variables. Typical dimensionless components are: σ_x/X, σ_y/Y, σ_s/S, $E_{11}e_x/X$, $E_{22}e_y/Y$, Ge_s/S, where the x-y coordinates coincide with the material symmetry axes.

Based on limited experimental evidence obtained from glass and boron composites, a strength criterion based on a generalization of the maximum distortional work appears reasonable. The resulting equation is:

$$\left(\frac{\sigma_x}{X}\right)^2 - \frac{Y}{X}\left(\frac{\sigma_x}{X}\right)\left(\frac{\sigma_y}{Y}\right) + \left(\frac{\sigma_y}{Y}\right)^2 + \left(\frac{\sigma_s}{S}\right)^2 = 1 \qquad (34)$$

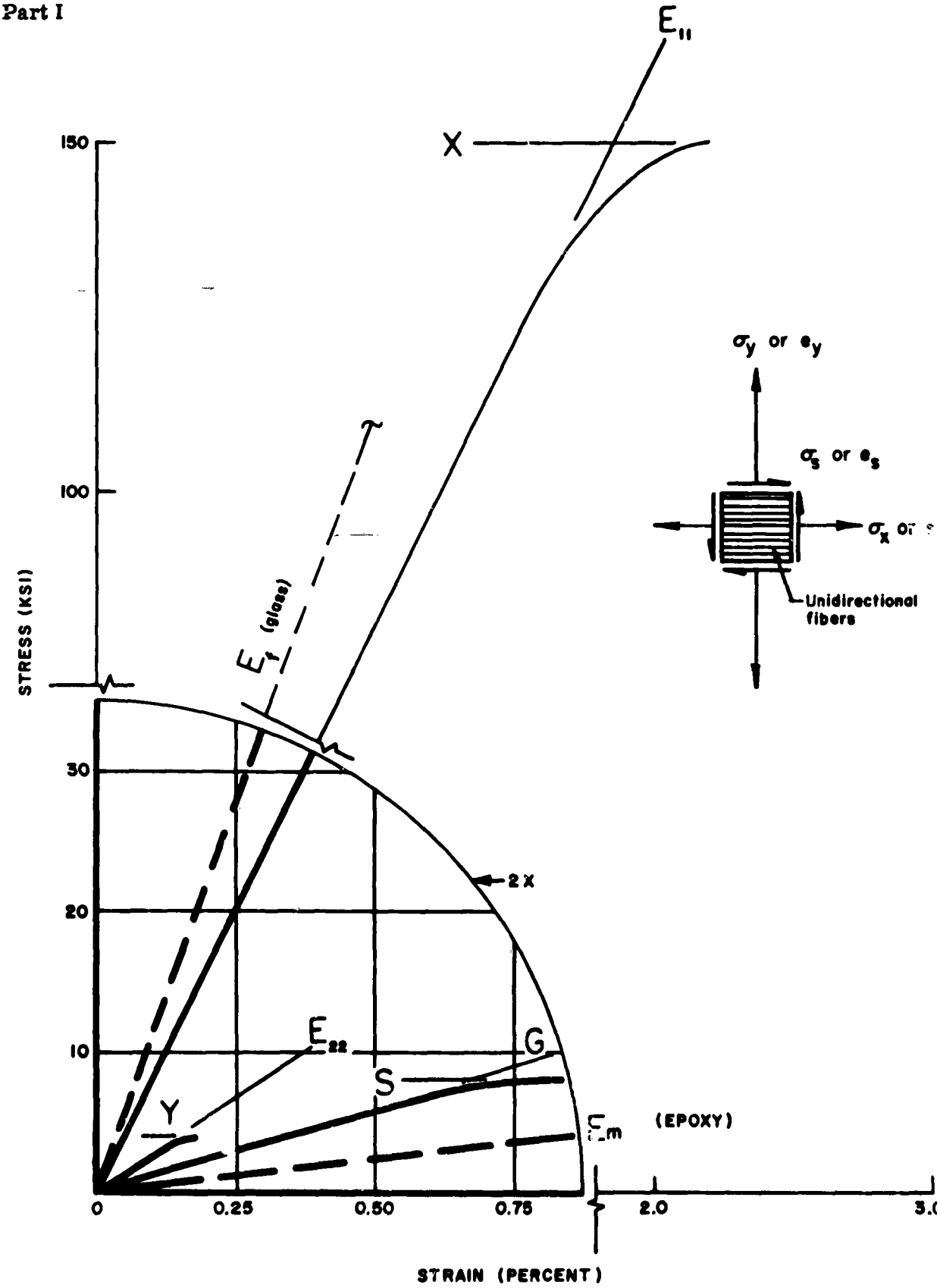

Figure 8. Determination of Principal Strengths

This equation states that if the stress components satisfy this equation, the strength of a unidirectional composite, with principal strengths X, Y, and S, would have been reached. If the numerical value of the right-hand side of this equation is less than 1, the material has not been stressed to its strength. Combining (34) with the transformation equations for stress components (16), (17), and (18), we can readily derive the uniaxial tensile strength of a unidirectional composite with an arbitrary fiber orientation. The final equation becomes:

$$\frac{1}{(\sigma_1')^2} = \frac{m^4}{X^2} + \left(\frac{1}{S^2} - \frac{1}{X^2}\right) m^2 n^2 + \frac{n^4}{Y^2} \tag{35}$$

where σ_1' is the uniaxial tensile strength of a unidirectional composite with a fiber oriented θ degrees from the loading direction, $m = \cos\theta$, and $n = \sin\theta$.

The principal strengths for both glass and boron composites with epoxy resin are very close to one another. Their numerical values are:

$$\begin{aligned} X &= \text{axial strength} &&= 150 \text{ ksi} \\ Y &= \text{transverse strength} &&= 4 \text{ ksi} \\ S &= \text{shear strength} &&= 8 \text{ ksi} \end{aligned} \tag{36}$$

Substituting these values into (35), the uniaxial strength for any fiber orientation can be computed. The theoretical result is shown in Figure 9 as a solid line. Experimental data for glass and boron composites are shown as circular dots and squares, respectively.

A strength criterion based on maximum stress can also be derived. The strength for a given fiber orientation is governed by the following three equations, whichever gives the lowest strength:

$$\sigma_1' = X / m^2$$

or

$$\sigma_1' = Y / n^2 \tag{37}$$

or

$$\sigma_1' = S / mn$$

Again using the principal strengths in (36), the resulting theoretical prediction is shown as a dashed line in Figure 9. Note that the prediction of the maximum stress theory does not agree with the data as well as the distortional work theory. The former theory predicts a higher strength than the latter.

A strength criterion based on maximum strain can be similarly derived. The strength for a fiber orientation is governed by the following three equations, whichever gives the lowest strength:

$$\sigma_1' = X / (m^2 - \nu_{12} n^2)$$

or

$$\sigma_1' = Y / (n^2 - \nu_{12} n^2) \tag{38}$$

or

$$\sigma_1' = S / mn$$

Again using the principal strengths in (36) and a major Poisson's ratio of 0.25, the uniaxial strength is shown as a dash-dot line in Figure 9. Between 0° to approximately 30°, the

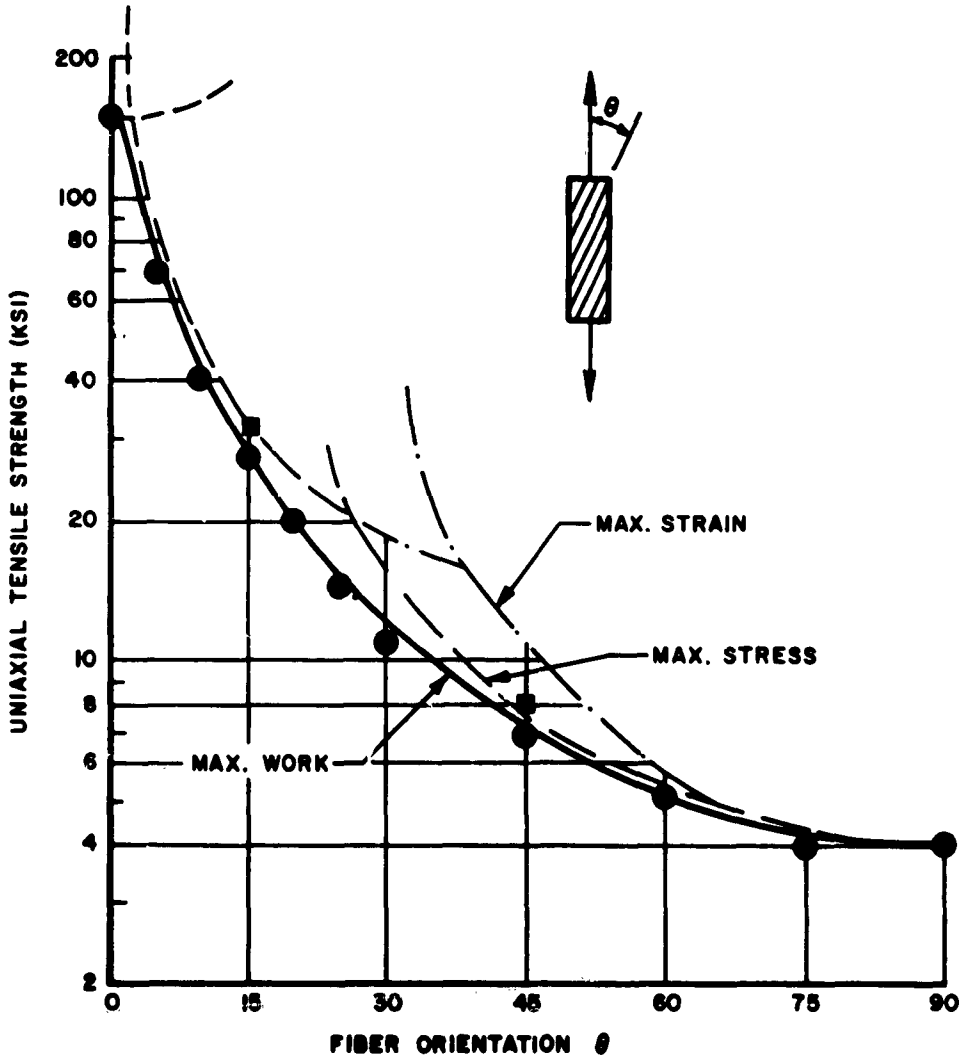

Figure 9. Uniaxial Strength Criteria

predictions of (37) and (38) coincide with each other. Above 30°, the predictions of the maximu strain is even higher than the maximum stress theory.

The maximum stress and strain criteria imply different modes of failure depending on th fiber orientation. Up to a fiber orientation of approximately 5°, the primary mode is an axi failure; from approximately 5° to 30°, a shear failure; and from 30° up to 90°, a transvers failure. The three modes of failure are assumed to operate independently of one another. Th distortional work criterion takes into account an interaction among the principal strengths ar thus results in a continuous curve in Figure 9, instead of segmented curves for the othe criteria. Based on available data, the distortional work criterion gives the best predictio

MECHANICS APPROACH

The study of the stiffness and strength of unidirectional composites for various fiber orien tations may appear unrelated to the actual use of these materials in common structures. It i

obvious that the greatest stiffness and strength of a unidirectional composite are obtained along the direction of the fibers, i.e, E_{11} and X. Why should we be bothered with all the other properties, e.g., E_{22}, G, Y, and S?

First of all, a mechanics analysis requires a mathematical model. The validity of the model must be checked experimentally. Both stiffness and strength are anisotropic and require a more complicated mathematical model than an isotropic material. Experimental results shown in Figures 7 and 9 have demonstrated the fact that the theoretical predictions of the uniaxial stiffness and strength thus far have passed their tests. The macroscopic property data can be used subsequently in structural design. One would like to be certain that those material properties are reasonably accurate. Netting analysis, on the other hand, would not have passed the test on either the stiffness or strength prediction.

Secondly, both homogeneous and composite materials in actual structures are usually subjected to complex states of stress and strain. Thus, a complete characterization of the material properties is necessary. For composite materials, the stiffness requires four principal components; and the strength, three components. There is no reason to emphasize the axial stiffness and strength over the other stiffness and strength components. Each component deserves equal respect regardless of its numerical value.

Thirdly, the results of mechanics analysis will provide information for materials and structural optimization. For upgrading current composite materials, we can either concentrate on improving the axial properties E_{11} and X, or the possibly more effective plan of remedying current weaknesses in transverse and shear properties. Mechanics analysis will produce qualitative and quantitative information to guide both materials development and structural applications.

The emphasis thus far on the validity of the mathematical models is justified by the importance of the models to the mechanics analysis. The description of the macroscopic stiffness and strength of unidirectional composites is reasonably accurate. Laminated composites can also be adequately described from the behavior of their constituent layers.

SECTION IV

MICROMECHANICS

A GENERAL DEFINITION

Micromechanics is a study of the mechanical interaction between the constituent mate of a composite. An understanding of this interaction can be used to establish the bridge bet the constituent and composite properties. The components of the composite or macros stiffness and strength, i.e., E_{11}, E_{22}, ν_{12}, G, X, Y, and S, represent the intrinsic m scopic material properties of a unidirectional composite. The elastic moduli are the ficients of the generalized Hooke's law which is the governing constitutive equation. The cipal strengths may be regarded as the limits of applicability imposed on the constit equation. Thus, macromechanics analysis has delineated the intrinsic properties that g the stiffness and strength of unidirectional composites. An important role of the m mechanics is to establish how these macroscopic properties can be controlled deliberate the geometric and material properties of the constituents.

MATHEMATICAL FORMULATION

The problems of solid mechanics can be divided into two basic areas: strength-of-mate and theory of elasticity. The former includes the theory of beams, plates, and shells; the la the theory of viscoelasticity and plasticity. In general, the strength-of-materials is a elementary theory than the theory of elasticity. It deals with the behavior of thin-w structures and is based on an assumption that the normals to the middle surface re undeformed. This assumption has been found experimentally to be reasonable if the deflec of the plate or shell are small relative to the thickness. In fact, for laminated anisot plates and shells, the assumption of the nondeforming normals still remains reasonable thus an entire body of existing knowledge and techniques of the theory of plates and shells be fully utilized for the composite materials. Most macromechanics problems of filamen structures can be solved using the elementary approach.

In problems of micromechanics, however, the theory of elasticity must be used. The elem tary approach often gives questionable results because rather subjective assumptions cerning the distribution of stress and strain are often required. Yet, a surprising numb problems of micromechanics is still being solved by the strength-of-materials appro Unlike the theory of elasticity, the elementary approach in micromechanics involves no erning partial differential equations but relies on sometimes arbitrary selections of m ematical models, examples of which include: the dissecting technique (removal of a seg of a composite for examination); the rearrangement technique (reshaping of the constit materials to a form solvable by elementary analysis); the isolation technique (reduction many-fiber problem to a single-fiber problem, thereby bypassing the problem of interac fibers), etc. Some of these techniques are difficult to justify and often lead to errone answers.

The theory of elasticity also requires assumptions. But they can usually be specified exp itly and with mathematical precision. Subjective interpretation is considerably less than required for the elementary approach. It is considered essential to use the theory of e ticity for micromechanics problems because of the complexity of the problem. It is alm impossible to visualize the exact distribution of stress or strain before the problem is sol Thus, the results of micromechanics analysis based on the elementary approach must no accepted without some critical examination; e.g., many of the micromechanical relation not satisfy a necessary condition that they remain valid in the limiting cases, such as w

the fiber volume goes to 0 or 100, or fiber stiffness goes to zero or infinity. The fact that the relations produce good numerical results for glass and boron composites is necessary but 's not always sufficient to guarantee their validity in general.

AXIAL PROPERTIES

The axial properties of a unidirectional composite include the axial stiffness E_{11} and axial strength X. The relations between these macroscopic properties and the micromechanical parameters is commonly described by the rule-of-mixtures equation, as follows:

$$E_{11} = V_f E_f + V_m E_m \tag{39}$$

$$X = V_f F_f + V_m F_m \tag{40}$$

where V_f = fiber volume, V_m = matrix volume, E_f = fiber stiffness, E_m = matrix stiffness, F_f = fiber strength, and F_m = matrix strength.

Equations (39) and (40) are derived using the following assumptions:

1) Fibers and the matrix are strained by the same amount (homogeneous strain) up to the ultimate failure. Fibers have uniform strength, i.e., there is no scatter in the strength measurement.

2) The constituent materials can be rearranged and reshaped as homogeneous materials connected in parallel. The axial properties are not affected by the cross-sectional shapes of the fibers, since they will be reshaped and rearranged in the development of the mathematical model. The interfacial bond strength is also of no significance as long as homogeneous strain is assumed.

3) The differences in the Poisson's ratio and the thermal contraction between the constituent materials are small, and the stresses induced by these differences are considered secondary.

These assumptions are reasonable within certain limits, and are not in violation of the elasticity theory. Based on available data, homogeneous strain is apparently valid up to a certain point depending on the constituent materials. The predictions of E_{11} by (39) will at least correspond to the initial elastic modulus. For some metal-metal composites, e.g., steel-silver and tungsten-copper systems, the rule-of-mixtures relation apparently remains valid even in the nonlinear range. The implication is that the steel and tungsten fibers each have nearly uniform strength. The state of homogeneous strain can be maintained up to the ultimate failure.

Where fibers have a large scatter in their strength, a number of complications arise. There is a difference between the monofilament strength F_o and the bundle strength F_b. As a bundle of filaments is loaded, the weaker ones will fail first. The remaining fibers must assume the load released by the fibers that have failed. For this reason, the bundle strength F_b will be lower than the monofilament strength F_o. The reduction in strength of F_b can be related directly to the scatter in the F_o, which may be represented by the standard deviation (s) or the coefficient of variation (s/F_o). Some numerical values of this strength reduction based on two statistical distributions of the monofilament strength are shown in Table II.

TABLE II

BUNDLE STRENGTH

Coefficient of Variation s/F_o	Dimensionless Bundle Strength F_b/F_o	
	Normal Distribution	Weibull Distribution
0	1.00	1.00
0.1	.78	.76
0.2	.67	.65
0.4	.56	.52
0.8	.50	.40

Table II can be used as follows. Assuming that for boron filaments, we can obt experimentally:

F_o = 400 ksi

s = 80 ksi

Then:

$s/F_o = 80/400 = 0.2$

From Table II, for $s/F_o = 0.2$, we find $F_b/F_o = 0.67$ or 0.65, depending on the assumed stat tical distribution. Then we can compute immediately:

$F_b = .67 \times 400 = 268$ ksi

or

$.65 \times 400 = 260$ ksi

The question now is what governs the axial strength. The monofilament and bundle strengt are interesting, particularly when they behave in accordance with the predicted results lis in Table II, but it is the axial strength X that is needed for structural applications. What va of F_f should be used in (40): F_o, F_b, or something in between? For perfect fibers, there zero standard deviation; then $F_f = F_o = F_b$. In fact, for metal composites mentioned earli fibers are fairly uniform. This may explain the fact that the rule-of-mixtures equation is re sonably good. But for imperfect fibers, like glass and boron, we may be able to use F_o a F_b to derive the upper and lower bounds for X using (40). The implication is that $F_b \leq F_f \leq F$

In a bundle, the load released by a broken fiber is distributed evenly among the fibers st intact. In a composite, the matrix can somehow localize the load distribution around a fib break. Away from the break, all fibers can continue to carry the same load. Thus, the presen of matrix contributes more than its share, as indicated by the second term in (40). In fact, t direct contribution of the matrix according to (40) is negligible in composites with high fib loading.

It is the ability of the matrix, together with neighboring fibers, to isolate the effect of local fiber failures that makes the matrix appear to contribute more than its share. This is sometimes referred to as a synergistic effect or a composite efficiency higher than 100 percent. The definition of efficiency is questionable in this instance. A theoretical prediction of the role of the matrix in a composite is apparently not available at this time. This problem is complicated because we can no longer assume a state of homogeneous strain.

The total effect of the matrix, however, can be readily measured by applying strand tests to specimens with and without matrix, i.e., to a composite and a bundle. Rewriting (40) by ignoring the direct contribution of the matrix (the $V_m F_m$ term, because $V_f > V_m$ and $F_f > F_m$),

$$X = V_f F_f \tag{41}$$

In terms of the maximum load of the composite P_c:

$$X = P_c / A_c \tag{42}$$

where A_c = cross-sectional area of the composite. For the bundle test, the bundle strength in terms of the total load P_b is:

$$F_b = P_b / A \tag{43}$$

where A is the original cross-sectional area of the fibers, when $A = V_f A_c$. Combining (41), (42), and (43), we obtain:

$$F_f = X / V_f = P_c / V_f A_c = P_c / A \tag{44}$$

$$= (P_c / P_b) F_b \tag{45}$$

$$= \beta F_b \tag{46}$$

where $\beta = P_c/P_b$ = matrix effectiveness in a composite. This is the ratio of the maximum loads and also the apparent maximum stresses in strands with and without matrix.

If the matrix contributes nothing, the beta factor would be unity. Thus, beta is always equal to or greater than 1. An upper limit of beta may be conceived when $F_f = F_o$, i.e., the average fiber stress in a composite reaches monofilament strength. The reciprocal of the F_b/F_o listed in Table II may be used as the upper limit of beta. Thus, the range of beta is related to the scatter in the strength of the fibers. Other parameters that would influence the beta factor would certainly include the elastic and strength properties of the constituents, and the interfacial bond strength. Volume ratio of the constituent materials is apparently not important, so long as the composite is a dense composite, which is assumed in (41). The numerical value of beta is very easy to determine experimentally; it is merely P_c/P_b, the ratio of the ultimate load of strands with and without matrix. Typical values of tests performed on glass, boron, and carbon composites with epoxy resins yields beta factors from 1.2 to a maximum of 2.1. The boron composites covered the lowest range, say from 1.2 to 1.4; carbon composites, about 1.5; and glass composites, 1.5 to 2.1. Glass-polyurethane and glass-rubber composites yielded lower beta values than glass-epoxy composites.

If the beta factor can in fact be predicted from the constituent properties, the axial strength can then be derived from combining (41) and (46):

$$X = \beta V_f F_b \tag{47}$$

Although an educated guess is still required at this time, the numerical values of beta w range from 1 to 2 for most composite materials.

Based on the proposed theory, the beta factor can be used to compare the effectiveness different matrix systems for a given fiber. Presumably, the higher beta factor would indica a higher matrix effectiveness in a composite.

The axial compressive strength is likely to be entirely different from the tensile streng In compression, local buckling may occur. The scatter in the fiber strength is probably le critical for compression than for tension. The role of the matrix is to hold the fibers position, so that axial load can be supported by the fibers. This mechanism is different fro the role of the matrix in the tensile case, where the matrix is an agent that transfers the lo released by a broken fiber to adjacent fibers, and thereby localizes the break.

To understand the axial properties more exactly than as generally reflected by the state the art, a few considerations may be helpful. First of all, an elasticity solution of a many-fib problem will be very enlightening. Many current investigations are concerned with the lo transfer by the matrix to a single fiber that has broken. It appears that in a dense composi (high fiber loading) the fibers adjacent to the fiber that has the break may carry most of t load released by the broken fiber. Some of the current photoelastic investigations of the lo transfers mechanism of the matrix in a dense composite may yield important qualitati results. A second important consideration in obtaining a better understanding of the axi properties involves a more exact mathematical characterization of the interface than th which is currently available. Finally, the mechanics of fracture and crack propagation in dense composite must also be investigated.

TRANSVERSE PROPERTIES

Transverse properties that have direct bearing on the macroscopic behavior of a unidirec tional composite are the transverse stiffness E_{22} and transverse strength Y. Other transver properties, e.g., the Poisson's ratio and shear modulus in the transverse plane, have secon dary influence on the macromechanical behavior and will not be discussed in this repor

Until recently, the transverse stiffness and strength were believed to be approximate those of the matrix. This conclusion was based upon an argument that the matrix would hav to assume all of the deformation since the glass fibers, for example, are 20 times higher stiffness and strength than the resin and can therefore be considered rigid.

The argument is correct, but the conclusion is not. The key technical point is the existenc of a complex and nonhomogeneous state of stress in the matrix of a composite. The behavio of a pure matrix (without fiber) under a simple and homogeneous state of stress would b entirely different. With the inclusion of fibers, the gross stiffness E_{22} is higher than that o the pure matrix. But the macroscopic strength Y will probably be lower than that of the matri The reason for this decrease in strength may be traced to a weak interfacial bond, and/or th effect of fibers as inclusions that cause stress concentrations in a brittle matrix or resistanc to flow in a ductile matrix. Figure 8 shows the stress-strain relations of a unidirectional glass epoxy composite, E-glass and pure epoxy resin. The stress-strain relation in the transvers direction is significantly different from that of the pure resin. The test data are indicated i Table III.

TABLE III

MATRIX AND TRANSVERSE PROPERTIES

	STIFFNESS	STRENGTH
Resin	$E_m = 0.5 \times 10^6$ psi	$F_m = 15$ ksi
Composite	$E_{22} = 2.7 \times 10^6$ psi	$Y = 4$ ksi

In what follows, we will attempt to outline a procedure for predicting the macroscopi transverse properties from the constituent properties. A number of simplifying assumption must be made at this time to formulate an elasticity problem that can be solved:

1) Both constituents are linearly elastic up to their failure stresses.

2) Interfacial bond is perfect (infinite bond strength).

3) Fibers are arranged in a regular array.

With these assumptions, a reasonably simple mathematical model can be constructed. Th fibers are arranged in a square array shown in Figure 10, so as to take advantage of th symmetry properties, i.e., square elements are deformed into rectangular elements unde

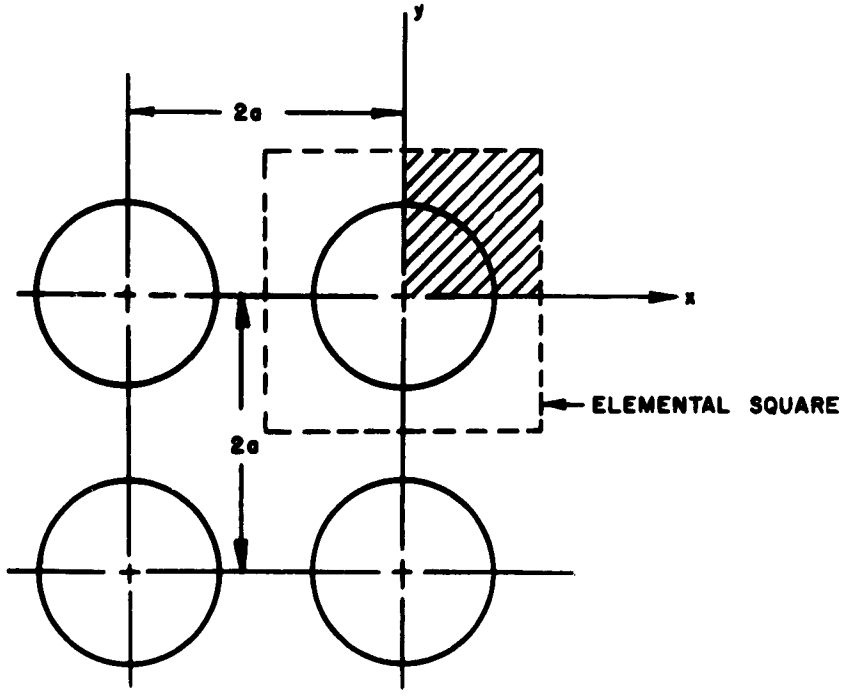

Figure 10. Idealized Fiber Packing

the influence of a transverse load. The fiber cross section may be any shape as long as it remains symmetrical with respect to the x and y axes. The governing differential equations of this idealized transverse plane of a unidirectional composite are, using a two-dimensional formulation (plane strain):

$$\left(\frac{\partial^2}{\partial x^2} + \frac{1-2\nu}{2(1-\nu)}\frac{\partial^2}{\partial y^2}\right)U + \frac{1}{2(1-\nu)}\frac{\partial^2}{\partial x \partial y} V = 0 \tag{48}$$

$$\frac{1}{2(1-\nu)}\frac{\partial^2}{\partial x \partial y} U + \left(\frac{1-2\nu}{2(1-\nu)}\frac{\partial^2}{\partial x^2} + \frac{\partial^2}{\partial y^2}\right) V = 0 \tag{49}$$

where U and V are the components of the displacement vector along the x and y axes, respectively. Solution of these simultaneous equations subject to appropriate boundary conditions (uniform stress at infinity p_∞, and perfect interfacial bond) will give information concerning the transverse stiffness E_{22} and the distribution of stress and strain throught the composite material. From the stress distribution, the transverse strength Y may be estimated.

Although the mathematical detail is beyond the scope of the present report, it will be helpful to describe explicitly what is actually done to obtain a solution. It is also hoped that the following description will show some of the limitations of the strength-of-materials approach.

The use of a square packing of the fibers, as shown in Figure 10, permits a significant simplification that can be derived from the symmetry consideration. It is not too difficult to conclude that under a load acting along the x-axis at infinity, p_∞, the elemental squares, each of which contains a fiber, will be deformed to a rectangle. The deformed shape must be rectangular; otherwise, the deformed elemental areas will not be compatible, i.e., cracks will develop between the boundaries of the elemental areas. If we use a mathematical model that has a hexagonal packing arrangement, the symmetry properties of the elemental hexagon will be quite different from the square packing. If we assume no regular packing arrangement, there will be no symmetry at all. The problem of transverse loading becomes intractable.

Returning to the square packing, if we know that the undeformed square can go into a rectangle under a transverse load, then, from symmetry considerations, the state of stress and strain must be identical in each elemental square, within which the stress and strain must also be symmetrical with respect to the x and y axes. Thus, there remains only to solve the problem of one quarter of each elemental square, shown as the shaded area in Figure 10. The state of stress and strain is repeated everywhere throughout the entire composite.

The undeformed elemental square and the deformed rectangle are shown in Figure 11, in solid and dotted lines, respectively. Displacements U_o and V_o imposed at the boundaries x = a and y = a, respectively, must satisfy the loading conditions, i.e., the average normal stress along the x-axis must be equal to p_∞, and the average normal stress along the y-axis must be zero. The normal stress distribution is shown qualitatively in Figure 11. With these boundary conditions imposed on the elemental area, (48) and (49) can be solved to provide the distribution of stress and strain throughout the entire area, including the condition at the fiber-matrix interface.

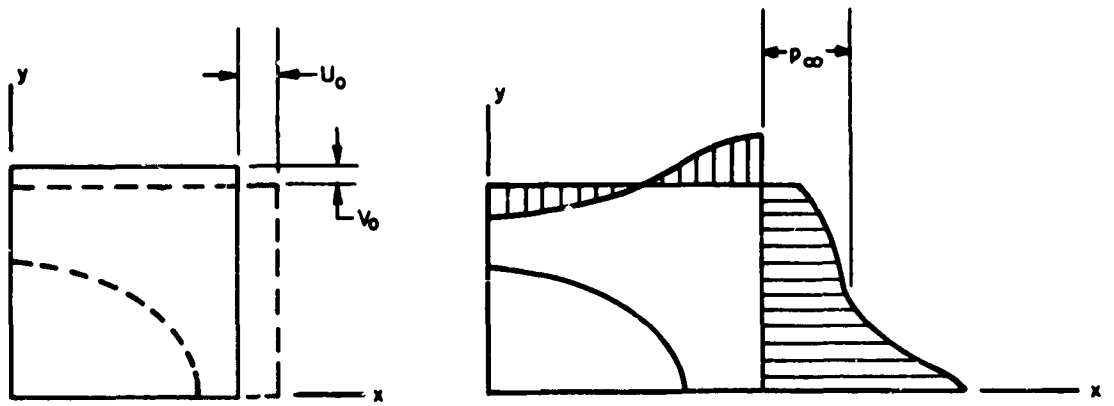

Figure 11. Deformation of the Elemental Square

The transverse stiffness E_{22} of the composite can be derived from the solution just obtained. The transverse stiffness is approximately the ratio between the average transverse load p_∞ and the transverse strain. For the present case, the transverse strain e_2 is:

$$e_2 = u_0 / a \tag{50}$$

Thus:

$$\begin{aligned} E_{22} &= P_\infty / e_2 \\ &= a p_\infty / U_0 \end{aligned} \tag{51}$$

The Poisson's ratio in the transverse plane, v_2, is approximately:

$$v_2 = V_0 / U_0 \tag{52}$$

The numerical results of the solution of (48) and (49), in conjunction with the boundary conditions shown in Figure 11, are shown in Figure 12. This diagram shows a dimensionless transverse stiffness, E_{22}/E_m, as a function of the stiffness ratio of the constituents, for selected fiber volumes. The Poisson's ratio for both constituents is 0.3. The spacing between fibers for various fiber volumes is drawn to scale on the right-hand margin. This gives a visual indication of the packing density.

Figure 12 can be used to estimate the transverse stiffness for various composites as follows. Assume that for:

1) Boron-epoxy composites

$$E_f = 60.0 \times 10^6 \text{ psi}$$
$$E_m = 0.5 \times 10^6 \text{ psi}$$

Then:

$$E_f / E_m = 120$$

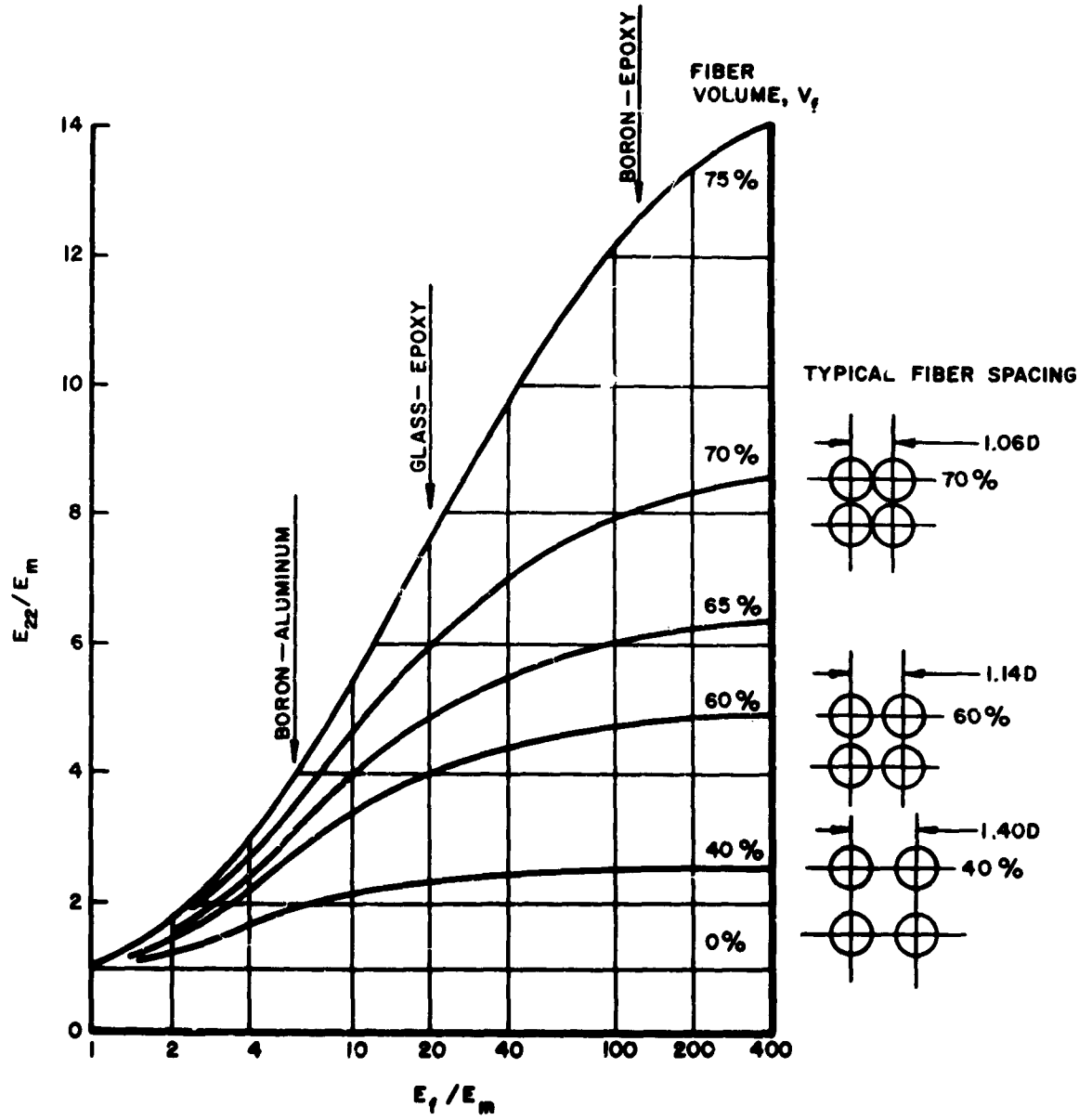

Figure 12. Transverse Stiffness

Follow the stiffness ratio in Figure 12 to the desired fiber volume, say, $V_f = 70\%$; the reinforcing factor E_{22}/E_m is 8.

Thus:

$$E_{22} = 8 \times 0.5 \times 10^6 = 4.0 \times 10^6 \text{ psi}$$

This predicted value agrees well with available data.

2) Glass-epoxy composites

$$E_f / E_m = 10 / 0.5 = 20$$

From Figure 12, for $V_f = 70\%$;

$$E_{22} / E_m = 6$$

Thus:

$$E_{22} = 6 \times 0.5 \times 10^6 = 3.0 \times 10^6 \text{ psi}$$

This predicted value also agrees well with available data.

3) Boron-aluminum composites

$$E_f / E_m = 60 / 10 = 6$$

From Figure 12, for $V_f = 40\%$ (for metal-matrix composites, V_f is likely to be lower than that of organic-matrix composites):

$$E_{22} / E_m = 2$$

Thus:

$$E_{22} = 2 \times 10 \times 10^6 = 20 \times 10^6 \text{ psi}$$

This prediction, although not verified experimentally, points out an important potential of metal-matrix composites, that the transverse stiffness is very close to the axial stiffness (30×10^6 psi for $V_f = 40\%$).

Equations (48) and (49) can be solved for a hydrostatic pressure imposed at infinity. Three fiber spacings, corresponding to three fiber volumes, of rigid circular fibers are solved. The dimensionless normal stress σ_x/p along one side of an elemental square, say, $x = a$, is shown in Figure 13. In a dilute composite with a fiber volume of 20 percent, the normal stress is nearly equal to the pressure at infinity. The fibers for this volume ratio are spaced approximately 2 diameters apart. At this spacing, the interaction among fibers is small. It may be concluded that the stress distribution around each fiber is very close to that of a single fiber in an infinite matrix. In fact, the packing arrangement of the fibers, in a dilute composite, whether it is square, rectangular, hexagonal, or random, will not have significant effect on the transverse stiffness or possibly the transverse strength.

As the fiber spacing is reduced, say to 1.14 or 1.06 diameter, which corresponds to fiber volumes of 60 to 70 percent, respectively, the normal stress along $x = a$ deviates drastically

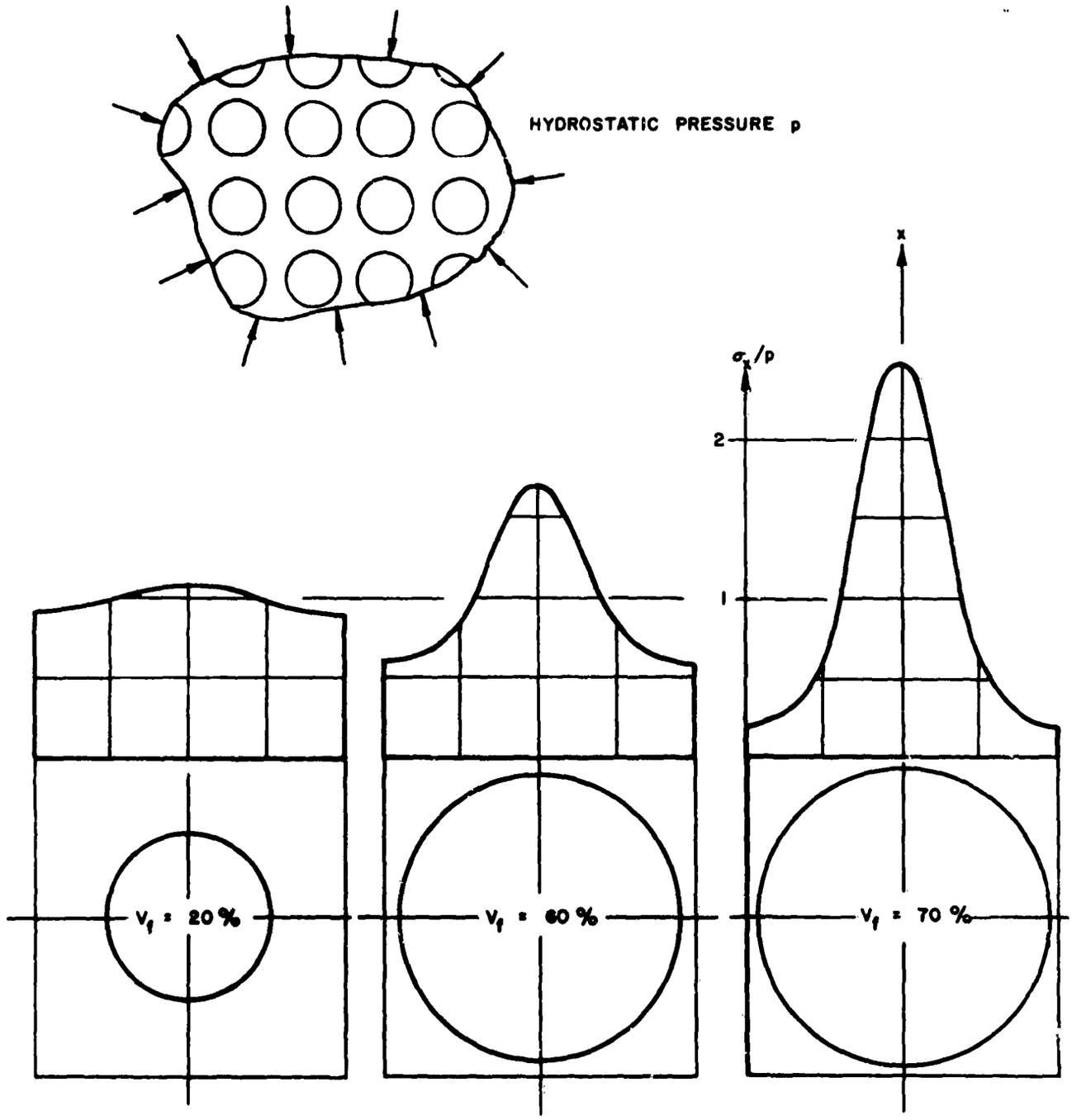

Figure 13. Microscopic Stress Induced by Hydrostatic Pressure

from the uniform pressure at infinity. For the latter case (V_f = 70), a stress concentration of 2.5 is introduced as a result of interacting fibers. The effect of a complex stress on the microscopic scale induced by a simple stress on the macroscopic scale (hydrostatic pressure) is clearly demonstrated in Figure 13.

Figure 13 can also be used to illustrate the limitation of the strength-of-materials approach in solving the micromechanics problem. The dissecting technique is valid if we can duplicate the load acting on the segment after its removal from the composite. The reshaping or rearrangement of the constituents will in general change the distribution of stress. Finally, the isolation technique is only permissible for a dilute composite. Only from an elasticity solution can we be certain of the magnitude of the error introduced by ignoring the fiber interaction. Subjective interpretation of the stress distribution which is often required in the strength-of-materials approach should be avoided whenever possible.

The elasticity solutions of (48) and (49) for different fiber packing arrangements, e.g., hexagonal and diamond, and noncircular fibers, can also be solved. These predictions of the transverse stiffness E_{22} are similar to the results shown in Figure 12. The problem of random packing has not been solved.

Being considerably more difficult than the transverse stiffness, the theoretical prediction of the transverse strength is not reliable at this time. The use of a stress or strain concentration factor, which for the dense glass-epoxy composites is approximately 2 to 3, has not been successful in predicting the transverse strength.

Additional information derived from inelastic analysis, imperfect interfacial bond, and fracture mechanics will be very useful in deriving a procedure for the prediction of the transverse strength. The random fiber packing, although not particularly important in the transverse stiffness, may also be an important factor affecting the transverse strength.

SHEAR PROPERTIES

Shear properties of importance to macromechanics analysis are the shear modulus G and shear strength S. These properties are the longitudinal shear σ_{yz} or σ_{xz} associated with a unidirectional composite. The shear stress and strain are in the plane of the fibers. The longitudinal shear is different from the transverse shear, which acts in the plane transverse to the fibers, and the interlaminar shear, which acts between the layers of a laminated composite. Various possible shearing actions are illustrated in Figure 14. The shear properties of immediate importance are the longitudinal shears, modulus G and strength S. The transverse shear is apparently of secondary importance. The interlaminar shear may be related to the interlaminar failures in laminated composites. This will be discussed again later in this section.

Returning to the longitudinal shear properties, an elasticity problem can be formulated with the same assumptions as those employed for the transverse properties. The stress at infinity for the shear problem will be σ_{xz} which is the same as σ_s. Again, a square packing arrangement of the fibers is used. The symmetry properties of an elemental square will simplify the elasticity problem. By assuming that W, the displacement along the z-axis, which coincides with the fiber direction, depends only on the x and y coordinates, and the displacements U and V along the x and y axes are zero, each elemental square will remain square after the shear loading is applied. Each point, however, will move in or out of the transverse

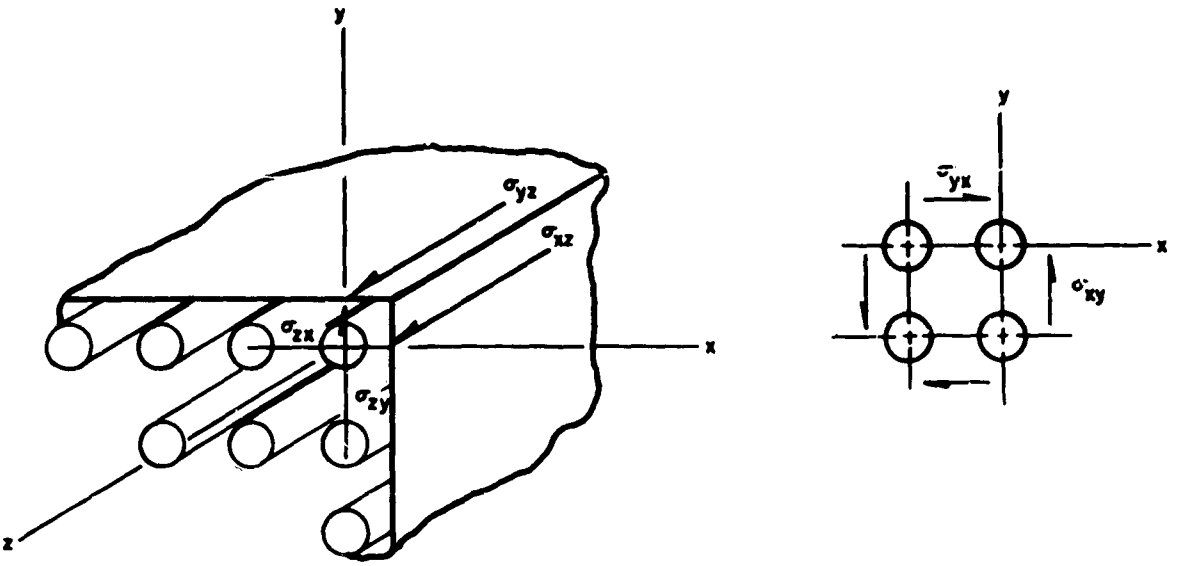

Figure 14. Shear Stresses

plane by an amount described by W. The shear loading causes a warping of the transverse plane. The partial differential equation that governs the displacement W is:

$$\frac{\partial^2 W}{\partial x^2} + \frac{\partial^2 W}{\partial y^2} = 0 \tag{53}$$

This is one of the simplest partial differential equations, and is called the Laplace's equation. Its solution, subject to appropriate boundary conditions, is relatively simple to obtain, as follows: Let w_o be the displacement at x = a; the shear strain e_s is:

$$e_s = W_o / a \tag{54}$$

The composite shear modulus G is:

$$\begin{aligned} G &= \sigma_s / e_s \\ &= a\sigma_s / W_o \end{aligned} \tag{55}$$

The numerical results of the solution of (53) for various shear modulus ratios and fiber volumes are shown in Figure 15. The results are very similar to the transverse stiffness curves in Figure 12. This diagram can be used as follows. For:

1) Boron-epoxy composites

$$G_f = 24.0 \times 10^6 \text{ psi}$$
$$G_m = 0.2 \times 10^6 \text{ psi}$$

Hence:

$$G_f / G_m = 24 / 0.2 = 120$$

From Figure 15, for $V_f = 70\%$

$$G/G_m = 7$$

Therefore:

$$G = 7 \times 0.2 \times 10^6 = 1.4 \times 10^6 \text{ psi}$$

This agrees well with experimental data.

2) Glass-epoxy composites

$$G_f = 4.0 \times 10^6 \text{ psi}$$
$$G_m = 0.2 \times 10^6 \text{ psi}$$

Hence:

$$G_f / G_m = 4.0 / 0.2 = 20$$

From Figure 15, for $V_f = 70\%$:

$$G / G_m = 5.5$$

Therefore:

$$G = 5.5 \times 0.2 \times 10^6 = 1.1 \times 10^6 \text{ psi}$$

This also agrees well with the experimental data.

3) Boron-aluminum composites

$$G_f = 24 \times 10^6 \text{ psi}$$
$$G_m = 4 \times 10^6 \text{ psi}$$

Hence:

$$G_f / G_m = 24/4 = 6$$

From Figure 15, for $V_f = 40\%$ (a dilute composite):

$$G / G_m = 2$$

Therefore:

$$G = 2 \times 4 \times 10^6 = 8 \times 10^6 \text{ psi}$$

The prediction of shear strength S from this micromechanics analysis has not been successful. A stress or strain concentration factor of approximately 2.5 exists for a dense glass-epoxy composite. The shear strength of the matrix is approximately 8 ksi. If we use the stress concentration factor of 2.5, a shear strength of 8/2.5 = 3.2 ksi is predicted. The measured shear strength S is at least twice the predicted value. An inelastic model for the constituent materials may shed some light on the inaccuracy of the strength prediction.

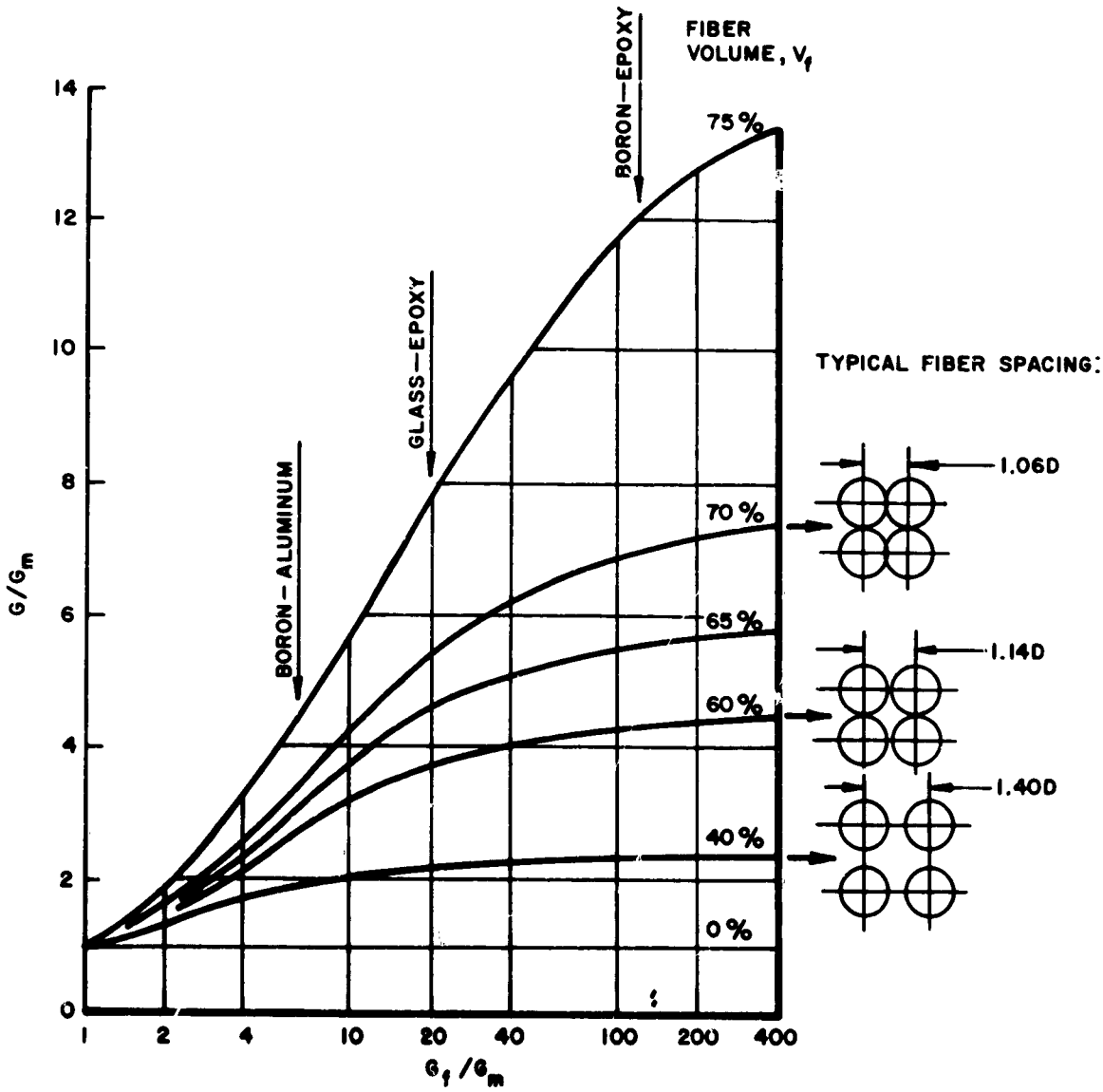

Figure 15. Longitudinal Shear Modulus

INTERLAMINAR PROPERTIES

A discussion on the interlaminar properties may be pertinent at this point. Delamination is known as one mode of failure in composite materials. It is usually attributed to poor interlaminar shear strength of the composite when delamination occurs. Interlaminar shear is an elusive term and its relation to delamination is equally vague. Therefore, the experimental determination of the interlaminar shear and its relevance to the structural behavior of composite materials remain uncertain.

By treating delamination as a macromechanical behavior, certainly permissible from the phenomenological standpoint, the stress components that may induce delamination are either shear stress σ_s or normal stress σ_y, shown in Figure 16.

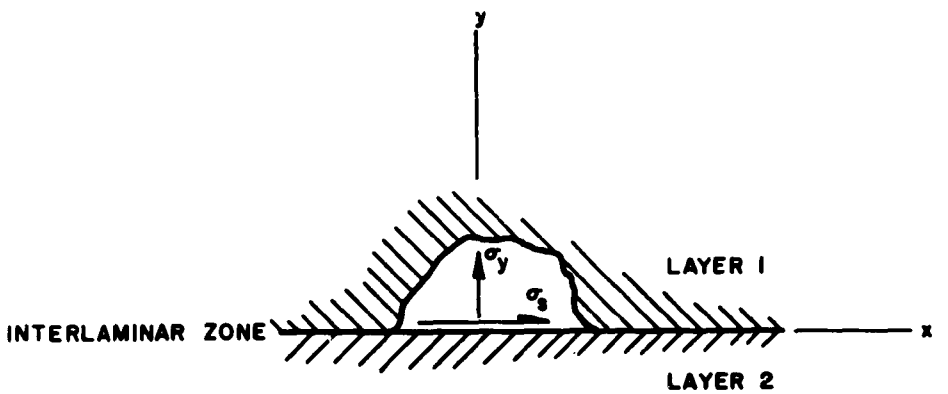

Figure 16. Interlaminar Stresses

Normal stress σ_x is not likely to contribute much to delamination. Without knowing precisely what stress component or components are responsible for a failure by delamination, it may be more appropriate to refer to the property responsible for the prevention of delamination, the interlaminar strength, without specific reference to shear as such. In cantilever beams, and plates with transverse loading, delamination may be attributed to a transverse shear failure. In pure bending of curved beams and plates, delamination may be due to a tensile stress in the radial direction (σ_y in Figure 16).

The mechanics approach can provide important information as to the state of stress that exists at the interlaminar zone for a given structural configuration and loading condition. Following the notations of Figure 14, where the z-axis runs along the fibers of a unidirectional composite, the longitudinal shear is governed by σ_{xz} or σ_{yz}, and the transverse shear, by σ_{xy}. If this unidirectional beam is bent by a terminal load P as a cantilever beam, with the beam axis running parallel to the fiber axis, as shown in Figure 17, the shear stress induced by the transverse load P is σ_{yz}. The only other nonzero stress component is σ_z. If a shear failure is induced in this beam, the shear strength should be the same as the longitudinal shear strength S, the value for which is approximately 6 to 8 ksi in the case of glass-epoxy composites. This shear strength can be obtained by twisting a thin-walled tube with circumferential windings only. The shear strength here is not the interlaminar shear since the beam is a unidirectional composite which can be treated as a homogeneous material. For the same reason, the failure in the segmented NOL (Navy Ordnance Laboratory) ring test should not be referred to as interlaminar. As stated previously, the interlaminar strength in this report refers to a property of a laminated composite.

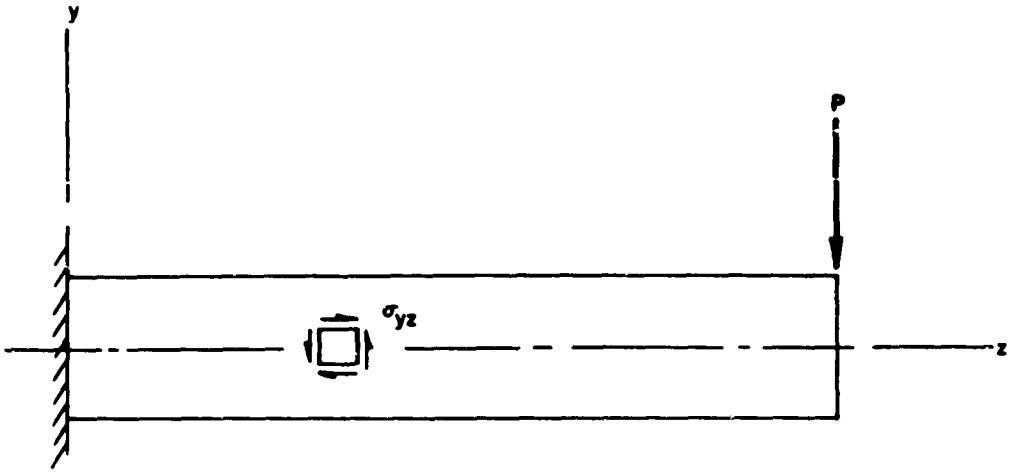

Figure 17. Cantilever Beam

In a laminated beam, the interlaminar shear, following the notations of Figure 17, will be σ_{yz}. The distribution of this shear stress across the beam will depend on the properties of the constituent layers, e.g., the thickness and stiffness of each layer. We cannot use the simple formula derived for isotropic homogeneous materials (where, at y = 0):

$$\sigma_{yz} = 3P / 2A \tag{56}$$

where P = lateral load and A = cross-sectional area; this formula is intended for a rectangular shape and the maximum shear occurs at the neutral axis of the beam. A more complicated formula than (56) must be used for a laminated beam. If some of the constituent layers of a laminated beam are anisotropic, an in-plane shear is induced by the shear coupling term n. This shear is different from both the longitudinal and interlaminar shears. The point which must be emphasized again is that formulas intended for homogeneous isotropic materials cannot be applied to composite materials indiscriminantly. The intrinsic properties of anisotropy and heterogeneity usually require fundamentally different formulas for stress and strain determination. In composite materials, a distinction between the micro and macro behavior must also be recognized. Interlaminar strength is treated as a macroscopic property. Little can be stated concerning the micromechanical behavior, i.e., what the fibers and the matrix are contributing to the interlaminar strength, because micromechanics analysis of this problem has not been solved.

In the case of the elastic moduli and deformation, a reasonably complete knowledge exists on both the micro and macroscopic scales. Design optimization and test methods for the elastic properties can be derived in a straightforward manner. The lack of understanding in the interlaminar properties and the predictions of the strength components X, Y, and S is partially responsible for the uncertainties and disagreements that exist in the design methodology and test methods of composite materials. In the next section, test methods will be discussed from the viewpoint of mechanics. The lack of knowledge in the theoretical predictions of strengths, however, does not in any way permit arbitrary selections of test methods, particularly if they are in conflict with the basic principles of mechanics.

SECTION V

TEST METHODS

As a class of structural materials, composite materials require a number of tests for various purposes; among them are design data generation, product assurance, manufacturing control, and sub- and full-scale structural performance check. An understanding of the principles of mechanics will be helpful in the evaluation of test methods. In particular, mechanics will provide guidelines as to what properties should be tested and how the tests should be carried out. A few of the fundamental principles of mechanics that are relevent to test methods of composite materials will now be discussed.

INTRINSIC AND INTENSIVE PROPERTIES

Intrinsic properties are properties that reflect the constitution of the materials. They are presumably independent of surrounding states. For example, mass is an intrinsic property, and weight is not, because the latter is dependent on the gravitational acceleration of the location where the weight is measured.

Intensive properties are properties that are independent of the dimensions of the material. The density of a body is intensive, and the mass is not, because the latter depends on the size of the body.

It is very important to know the intrinsic and intensive properties of a structural material. These properties are presumably independent of the size and shape of the structure. They will also be independent of the loading conditions. Once these properties are known, the analysis and design of complex structures subjected to combined loadings can, in theory, be carried out. Scaling of structures from one size to another will not present any problem so long as the mechanics are concerned. Process variations, manufacturing tolerances, and deviations from idealized loading conditions all will affect the accuracy of the scaling process. They are important but separate problems and may be dealt with effectively as factors that cause perturbations or modifications of the basic intrinsic and intensive properties. It should be realized that the problems associated with the design and manufacturing of structures cannot be solved without the benefit of the principles of mechanics.

In composite materials, only in recent years has the mechanics principle been widely accepted as a useful approach. From this principle, which includes both the micro and macromechanics, basic guidelines can be established for the design and manufacturing of both the materials and the finished structures. In particular, what the intrinsic and intensive properties are for composite materials must be established first. From the preceding sections of this report, macromechanics can be utilized for the establishment of what these properties are. Based on the current knowledge, these properties must include the four independent elastic moduli, E_{11}, E_{22}, ν_{12}, and G, and the three strengths, X, Y, and S. Other important properties which have not been accurately assessed from the mechanics standpoint but are being actively investigated include the interlaminar strength, creep, fatigue, and fracture toughness.

Workers in the composite materials field should at least be aware of the elastic moduli and strengths which have already been established as intrinsic and intensive properties. Despite what netting analysis implies, axial stiffness and strength alone will not be adequate. Any standardization of test methods prior to a reasonable understanding of what the properties to be evaluated are may be considered premature. Since the stiffness and strength components of unidirectional and laminated composites are reasonably well understood, their experimental determination can be properly standardized.

SAINT VENANT'S PRINCIPLE

Saint Venant's principle is one of the most important principles in the field of mechanics. This principle is invoked explicitly or implicitly in every problem of macro and micromechanics. It has a particular relevance to test methods.

This principle states that if the forces acting on a small portion of the surface of a body are replaced by statically equivalent forces and moments, this replacement will change the stress distribution locally but has a negligible effect on the stresses away from this local region. This principle permits the idealization of forces acting on a body. The actual forces can be replaced by statically equivalent forces which can be more easily described mathematically. In other words, the actual forces may be too complicated to be described, but Saint-Venant's principle states that the detailed distribution of the forces only have influence in a localized region. For example, the actual forces exerted by the grip of a testing machine to a uniaxial tensile specimen is impossible to ascertain, except that the net effect of all the forces is equal to the axial load. For this reason, it is a common practice to have a specimen designed such that the test section is far removed from the loading points or the grips.

Another aspect of the Saint Venant's principle can be applied to short specimens. A short specimen may be defined as one having a length that is no more than twice its width. For short specimens, the actual forces that exert on the specimens cannot be replaced by statically equivalent forces because the actual stress distribution will most likely permeate throughout the entire specimen. Since the actual forces are either unknown or too complicated for the determination of stresses in the specimen, the analysis and reduction of test results obtained from short specimens are very difficult. If we choose to ignore Saint Venant's principle, we may find: (1) a large scatter in his test results; (2) that he is not measuring intrinsic and intensive properties; and (3) data analyses of stress from load, and strain from displacement become very difficult.

NONHOMOGENEOUS STRESSES

A nonhomogeneous stress is a nonuniform stress distribution throughout a body. Stress varies from point to point. A change in shape, cross-sectional area, or materials will in general induce nonhomogeneous stress. Test methods of composite materials should be based on homogeneous stress on the macroscopic scale whenever possible. As stated earlier in these notes, the state of stress on the microscopic scale for practically all types of macroscopic loadings (simple or complex) will be complex and nonhomogeneous. Any deliberate introduction of complex and nonhomogeneous stress on the macroscopic scale will be difficult to justify.

The objection to the nonhomogeneous state of stress consists of two parts: (1) the inability in a mechanics analysis to determine the exact state of stress and strain, which makes the data reduction of the test results impossible; and (2) that several intrinsic and intensive properties of the material are tested simultaneously. A test of this type may be classified a structural test as opposed to one for property determination.

EXISTING TEST METHODS

It appears that an understanding of the principles of mechanics will be helpful in the evaluation of existing test methods. We must first understand what macroscopic properties need testing before test methods can be selected, designed, and standardized. Violations and deviations from ideal specimen configuration and loading conditions are often unavoidable,

but we should at least be fully aware of the inherent limitations and the lack of generality of these tests. The principles of mechanics may be used to derive the following guidelines on test methods:

1) Intrinsic and intensive properties should be established first, whenever possible. Test methods should be designed so that only one of those properties is being evaluated at a time. One way of achieving this will be the use of a simple and homogeneous state of stress or strain. The determination of the independent elastic moduli and strengths can be carried out using tabs, plates, or tubes subjected to simple loading.

2) Short specimens should be avoided whenever possible, because end conditions and constraints cannot be specified for the purpose of data reduction (from load to stress, and displacement to strain) nor can they be disregarded as local irregularities with no effect on the rest of the specimen.

3) The use of the theory of beams, plates, and shells has definite limitations. A beam is a one-dimensional body. A short beam (with length no more than twice the width) is a two-dimensional body and is not a beam anymore. By the same token, a thick plate is not a plate as defined in the strength-of-materials approach. The deflection of beams and plates must be kept small to stay within the realm of the theory of beams and plates.

4) Formulas developed for isotropic homogeneous materials cannot, in general, be used for anisotropic heterogeneous materials.

5) Introduction of notches, holes, or other geometric irregularities will induce complex and nonhomogeneous stress (stress concentrations). They make the test data reduction considerably more complicated, and the intrinsic and intensive properties are no longer separable.

6) A distinction between the macro and microscopic stress and strain must be maintained at all times. Intuitive description of the stress distribution on the microscopic scale should be avoided. The state of stress in the fibers and the matrix is not clearly understood at this time, and any oversimplified description, particularly derived from netting analysis, may be very misleading.

An evaluation of individual test methods is beyond the scope of this report. The difficulties associated with the test methods on ordinary materials are multiplied in composite materials for two primary reasons: (1) composite materials are anisotropic and heterogeneous; and (2) there is a distinction that exists between the macro and microscopic viewpoints. A considerable amount of scientific research on test methods of composite materials remains to be done. The mechanics principle can and should play a major role in the selection and design of test methods. Composite materials cannot be accepted as engineering materials unless test methods are adequately understood and properly executed.

UNCLASSIFIED
Security Classification

DOCUMENT CONTROL DATA - R&D
(Security classification of title, body of abstract and indexing annotation must be entered when the overall report is classified)

1. ORIGINATING ACTIVITY *(Corporate author)* AFML (MAN) Wright-Patterson AFB, Ohio	2a. REPORT SECURITY CLASSIFICATION UNCLASSIFIED 2b. GROUP

3. REPORT TITLE
Mechanics of Composite Materials
Part I - Introduction

4. DESCRIPTIVE NOTES *(Type of report and inclusive dates)*

5. AUTHOR(S) *(Last name, first name, initial)*
Tsai, Stephen W.

6. REPORT DATE June 1966	7a. TOTAL NO. OF PAGES 45	7b. NO. OF REFS
8a. CONTRACT OR GRANT NO. b. PROJECT NO. 7340 c. Task No. 734003 d.	9a. ORIGINATOR'S REPORT NUMBER(S) AFML-TR-66-149 9b. OTHER REPORT NO(S) *(Any other numbers that may be assigned this report)* n/a	

10. AVAILABILITY/LIMITATION NOTICES
Distribution of this document is unlimited.

11. SUPPLEMENTARY NOTES n/a	12. SPONSORING MILITARY ACTIVITY AFML (MAN) Wright-Patterson AFB, Ohio

13. ABSTRACT

The principles of mechanics are utilized for the description of the behavior of fiber-reinforced composites. Principal components of elastic moduli and strength for an orthotropic material are established as the intrinsic macromechanical properties. Micromechanics analyses provide a rational design basis of these properties from the material and geometric properties of the constituent materials. A bridge between the properties of the constituent materials and the structural behavior of a laminated anisotropic composite can then be established. Combined materials and structural design become feasible. Finally, test methods of composite materials are evaluated. The principles of mechanics can be used to select the material properties to be tested and the appropriate test procedures to be followed.

DD FORM 1 JAN 64 1473

UNCLASSIFIED
Security Classification

UNCLASSIFIED
Security Classification

14. KEY WORDS	LINK A ROLE	LINK A WT	LINK B ROLE	LINK B WT	LINK C ROLE	LINK C WT
Composite materials						
Fiber reinforced composites						
Anisotropic stiffness						
Anisotropic strength						
Macromechanics						
Micromechanics						
Test Methods						

INSTRUCTIONS

1. ORIGINATING ACTIVITY: Enter the name and address of the contractor, subcontractor, grantee, Department of Defense activity or other organization *(corporate author)* issuing the report.

2a. REPORT SECURITY CLASSIFICATION: Enter the overall security classification of the report. Indicate whether "Restricted Data" is included. Marking is to be in accordance with appropriate security regulations.

2b. GROUP: Automatic downgrading is specified in DoD Directive 5200.10 and Armed Forces Industrial Manual. Enter the group number. Also, when applicable, show that optional markings have been used for Group 3 and Group 4 as authorized.

3. REPORT TITLE: Enter the complete report title in all capital letters. Titles in all cases should be unclassified. If a meaningful title cannot be selected without classification, show title classification in all capitals in parenthesis immediately following the title.

4. DESCRIPTIVE NOTES: If appropriate, enter the type of report, e.g., interim, progress, summary, annual, or final. Give the inclusive dates when a specific reporting period is covered.

5. AUTHOR(S): Enter the name(s) of author(s) as shown on or in the report. Enter last name, first name, middle initial. If military, show rank and branch of service. The name of the principal author is an absolute minimum requirement.

6. REPORT DATE: Enter the date of the report as day, month, year; or month, year. If more than one date appears on the report, use date of publication.

7a. TOTAL NUMBER OF PAGES: The total page count should follow normal pagination procedures, i.e., enter the number of pages containing information.

7b. NUMBER OF REFERENCES: Enter the total number of references cited in the report.

8a. CONTRACT OR GRANT NUMBER: If appropriate, enter the applicable number of the contract or grant under which the report was written.

8b, 8c, & 8d. PROJECT NUMBER: Enter the appropriate military department identification, such as project number, subproject number, system numbers, task number, etc.

9a. ORIGINATOR'S REPORT NUMBER(S): Enter the official report number by which the document will be identified and controlled by the originating activity. This number must be unique to this report.

9b. OTHER REPORT NUMBER(S): If the report has been assigned any other report numbers *(either by the originator or by the sponsor)*, also enter this number(s).

10. AVAILABILITY/LIMITATION NOTICES: Enter any limitations on further dissemination of the report, other than those imposed by security classification, using standard statements such as:

(1) "Qualified requesters may obtain copies of this report from DDC."

(2) "Foreign announcement and dissemination of this report by DDC is not authorized."

(3) "U. S. Government agencies may obtain copies of this report directly from DDC. Other qualified DDC users shall request through _____."

(4) "U. S. military agencies may obtain copies of this report directly from DDC. Other qualified users shall request through _____."

(5) "All distribution of this report is controlled. Qualified DDC users shall request through _____."

If the report has been furnished to the Office of Technical Services, Department of Commerce, for sale to the public, indicate this fact and enter the price, if known.

11. SUPPLEMENTARY NOTES: Use for additional explanatory notes.

12. SPONSORING MILITARY ACTIVITY: Enter the name of the departmental project office or laboratory sponsoring *(paying for)* the research and development. Include address.

13. ABSTRACT: Enter an abstract giving a brief and factual summary of the document indicative of the report, even though it may also appear elsewhere in the body of the technical report. If additional space is required, a continuation sheet shall be attached.

It is highly desirable that the abstract of classified reports be unclassified. Each paragraph of the abstract shall end with an indication of the military security classification of the information in the paragraph, represented as *(TS), (S), (C), or (U)*.

There is no limitation on the length of the abstract. However, the suggested length is from 150 to 225 words.

14. KEY WORDS: Key words are technically meaningful terms or short phrases that characterize a report and may be used as index entries for cataloging the report. Key words must be selected so that no security classification is required. Identifiers, such as equipment model designation, trade name, military project code name, geographic location, may be used as key words but will be followed by an indication of technical context. The assignment of links, rules, and weights is optional.

UNCLASSIFIED
Security Classification