UNCLASSIFIED

AD NUMBER

AD644911

NEW LIMITATION CHANGE

TO

Approved for public release, distribution unlimited

FROM

Distribution authorized to U.S. Gov't. agencies and their contractors; Administrative/Operational Use; JUN 1966. Other requests shall be referred to Director, Bureau of Naval Personnel, Washington, DC.

AUTHORITY

30 Jun 1978, DoDD 5200.10

THIS PAGE IS UNCLASSIFIED

AD644911

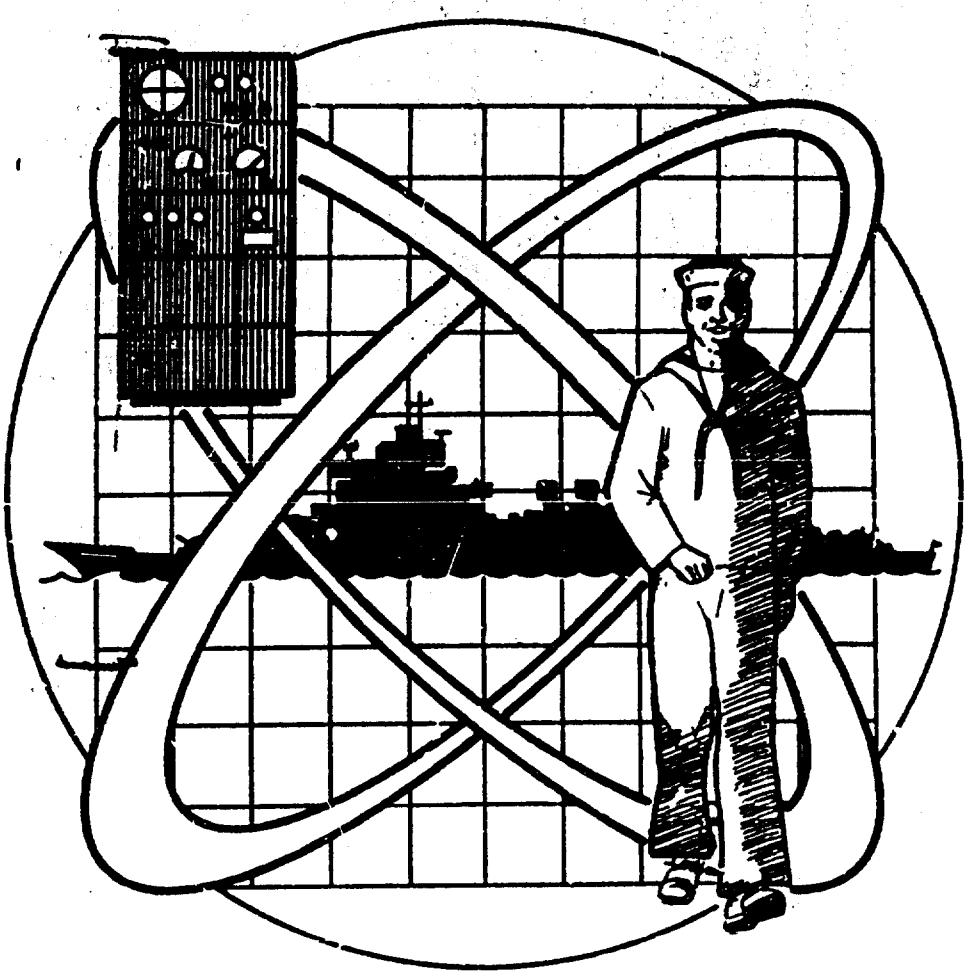

SYSTEMS ANALYSIS PROCEDURES FOR ADP APPLICATION OF THE CORRECTIVE MAINTENANCE BURDEN PREDICTION PROCEDURES

VOLUME I STUDY REPORT

JUNE 1966

REPORT NUMBER PTB 66-8

DDC
JAN 13 1967

CLEARINGHOUSE
FOR FEDERAL SCIENTIFIC AND
TECHNICAL INFORMATION

Hardcopy	Microfiche		
$3.00	$.65	214 pp	as

ARCHIVE COPY

NEW DEVELOPMENTS RESEARCH BRANCH
PERSONNEL RESEARCH DIVISION
BUREAU OF NAVAL PERSONNEL

Distribution of This Document is Unlimited

SYSTEMS ANALYSIS PROCEDURES FOR ADP APPLICATION OF THE CORRECTIVE MAINTENANCE BURDEN PREDICTION PROCEDURES

VOLUME I STUDY REPORT

JUNE 1966

REPORT NUMBER PTB 66-8

Prepared Under
CONTRACT NUMBER NONR 3821(00)
AMENDMENT NO. 6
For
NEW DEVELOPMENTS RESEARCH BRANCH
PERSONNEL RESEARCH DIVISION
BUREAU OF NAVAL PERSONNEL

Prepared By

T.J. Dickerson J.V. Mathis
S.T. Smith C. Butler

FEDERAL ELECTRIC CORPORATION
INDUSTRIAL PARK, PARAMUS, NEW JERSEY

Distribution of This Document is Unlimited

ACKNOWLEDGEMENTS

This personnel research study was conducted under the auspices of Captain L. A. Wilder, USN, Director of the Personnel Research Division, Bureau of Naval Personnel. The work was implemented through the New Developments Research Branch under the direction of Mr. A. S. Sjoholm. The contract Scientific Officer was Mr. W. L. Hopkins. Direct monitoring was carried out by Mr. Hopkins assisted by Mr. R. R. Seiler.

SUMMARY

In May 1962, a Manpower Prediction Technique Study was undertaken by the New Developments Research Branch of the Bureau of Naval Personnel. This study was the first phase of research initiated for the purpose of determining the best method of integrating the techniques of task analysis with the predictive methodology of the Maintainability Index Prediction Procedure.

The Maintainability Index Prediction Procedure, developed for the Bureau of Ships by Federal Electric Corporation under Contract NObsr 75376, was used as the basis for the development of a maintenance manpower prediction procedure. Subsequent development of techniques whereby a task analysis approach could be combined with the established prediction technique for determining maintenance time requirements made possible the development of the Corrective Maintenance Burden (CMB) Prediction Procedure.

The CMB Prediction Procedure provides a technique for performing a logical, step-by-step analysis of an equipment design to estimate the time required to perform each primary corrective maintenance task, and the relative complexity of difficulty of the task. The final results of the application of the CMB Prediction Procedure are a prediction of the total time, per unit of equipment operating time, that personnel possessing the specific respective qualifications would be required for performing primary corrective maintenance on a particular equipment, and the need, if any, for special training.

Subsequent to the initial development study, Phase I of the contract was extended to include a detailed application study and to further evaluate and refine the procedure. The applicability of the procedure was assessed by application to Radar Set AN/SPS-28. Discrepancies and ambiguities noted in the procedural instructions were resolved and the instructions were revised accordingly. The revision was then tested through application to a second equipment, Radar Set AN/SPS-40. This application of the CMB Prediction Procedure in its latest stage of refinement demonstrated that:

1. It is practical to apply and produces consistent results.

2. It is applicable in the design cycle when schematics are available and packaging plans have been documented.

3. It produces quantitative, useful information in terms of time required, by skill level, to perform primary corrective maintenance.

4. The results of its application permit evaluation of a design from a manpower point-of-view since the results distinguish between skill levels, and provide a prediction of the time required by each skill level.

5. The results of its application can be used to evaluate alternative designs in terms of their effect on the manpower and training burden.

6. Guides can be developed to aid designers in designing equipment with a view toward reducing the manpower requirements for primary corrective maintenance.

The Phase I development and application of the Corrective Maintenance Burden Prediction Procedure is documented in four volumes of New Developments Research Branch Report No. ND 64-34, entitled, "PREDICTING THE CORRECTIVE MAINTENANCE BURDEN."[1]

Because of the requirement for developing the personnel subsystem concurrently with hardware development, manpower predictions must be made at various points in the equipment development cycle. As a result, the New Developments Research Branch recognized that for the CMB Prediction Procedure to be an effective predictive tool, it must have the capacity to be applied at key points in an equipment's development cycle when only a very limited amount of data may be available. In view of the requirement for supplementary CMB Prediction Procedures that would be available in various phases of equipment development, Phase II of the Manpower Prediction Technique Study was initiated. As a result of this study, three supplementary procedures were developed, and were designated Procedures A, B, and C in the order of increasing complexity, depth of application, and the amount of information required for application. Procedure A requires only the general descriptive information that should be available during, or at the completion of the Operational Requirement Phase of an equipment development program. Procedure B has the sensitivity necessary to utilize the additional design information that should be developed during the System Planning Phase of an equipment development program. Procedure C considers additional data generated during the System Design Phase. This procedure is similar in application to the original prediction procedure but permits sufficient generalization to have practical application before detail circuit schematics have been prepared.

The development of the supplementary procedures is documented in two volumes of New Developments Research Branch Report No. ND 65-31, entitled, "SUPPLEMENTARY CORRECTIVE MAINTENANCE BURDEN PREDICTION PROCEDURES."[2]

---

[1] VOLUME I, PREDICTION STUDY, dated 30 April 1963, contains details of the tasks undertaken during the development program and techniques used in developing the procedure.

VOLUME II, PREDICTION PROCEDURE (Revised), dated 31 January 1964, contains detailed step-by-step instructions for applying the Corrective Maintenance Burden Prediction Procedure.

VOLUME III, EVALUATION OF PREDICTION PROCEDURE AND DETAILED REPORT ON APPLICATION TO THE AN/SPS-28, dated 31 January 1964, contains the detailed results of applying the procedure to the AN/SPS-28 equipment and documents the revision to the procedural instructions.

VOLUME IV, EVALUATION OF PREDICTION PROCEDURE AND DETAILED REPORT ON APPLICATION TO THE AN/SPS-40, dated 31 January 1964 (Confidential) contains the detailed results of applying the procedure to the AN/SPS-40 equipment, and documents the conclusions that were drawn regarding the applicability and usefulness of the procedure.

[2] VOLUME I, STUDY REPORT, dated March 1965, contains details of the tasks undertaken during the development program and the techniques used in developing the supplementary procedures.

VOLUME II, PROCEDURAL INSTRUCTIONS AND ILLUSTRATIVE APPLICATION, dated March 1965, contains detailed step-by-step instructions for applying each of the supple-

Phase III of Contract NONR 3821(00), was undertaken to facilitate Corrective Maintenance Burden analyses by Navy personnel by training selected staff members of the Personnel Research Laboratory (PRL) in the proper application of the CMB Prediction Procedure. The training program included a 5-day classroom training course, conducted at Federal Electric Corporation, Paramus, New Jersey, and a practical exercise involving student application of the procedure to an electronic equipment that is presently under development by the Bureau of Ships.

As a result of the training program, the need for refinement of certain areas in the instructions for application of the CMB Prediction Procedure became apparent. Therefore, a new, completely revised set of procedural instructions was prepared. The revised procedures are documented in New Developments Research Branch Report No. ND 65-36, entitled, "THE CORRECTIVE MAINTENANCE BURDEN PREDICTION PROCEDURE — (PROCEDURAL INSTRUCTIONS)," which replaces Volume II of the original study.

Also developed during this program was a Corrective Maintenance Burden Prediction Procedure Training Manual. This manual was developed for use by the Bureau of Naval Personnel in CMB indoctrination seminars, and for training personnel in the application of the Corrective Maintenance Burden Prediction Procedure. The Training Manual is presented in Volume II of the Phase III series, entitled, "TRAINING MANUAL FOR APPLICATION OF THE PROCEDURE."

A Corrective Maintenance Burden analysis of Radar Set AN/SPS-49 was also performed as part of the Phase III study program. The results of this analysis are described in Report No. ND65-56, entitled, "APPLICATION OF THE CORRECTIVE MAINTENANCE BURDEN PREDICTION PROCEDURE TO THE AN/SPS-49 RADAR SET" (Confidential).

In view of the increasing complexity of current and future electronic equipments, it has become apparent that manual application of the CMB Prediction Procedure would become impractical. Therefore, Phase IV of this program was instituted to perform a systems analysis for Automatic Data Processing Application of the Original (Detail) and Supplementary CMB Prediction Procedures.

This report covers the work performed during Phase IV of the program, and describes the analysis that was performed to isolate details of the CMB Prediction Procedures that are conducive to Automatic Data Processing; the development of coding methods for ADP application, appropriate data formats, and coded mathematical expressions; and the preparation of a complete set of System Flow Charts to facilitate computer programming of the Prediction Procedures.

This Report is presented in two volumes. This volume describes all development activities, and includes a complete set of functional matrices and an appendix containing checks of the coded mathematical expressions and System Flow Charts. Volume II presents the actual System Flow Charts, together with a review of the mathematical model. Coding formats, definitions and other data essential to the development of a computer program are included in the Appendix to Volume II.

TABLE OF CONTENTS

SECTION		PAGE
1	FUNCTIONAL ANALYSIS OF THE DETAIL AND SUPPLEMENTARY CORRECTIVE MAINTENANCE BURDEN PREDICTION PROCEDURES	
	1. Functional Analysis	1-1
	2. Analysis of Procedural Instructions	1-1
	3. Summary of Analysis	1-8
	4. Conclusions on the Detail Procedure	1-8
	5. Conclusions on Procedure C	1-18
	6. Conclusions on Procedure B	1-19
	7. Conclusions on Procedure A	1-19
2	DEVELOPMENT OF CMB DATA FORMATS AND CODING PROCEDURES	
	1. Data Format Requirements	2-1
	2. Input Data Sheets	2-1
	3. Input Data Codes	2-8
	4. Output Data Formats	2-35
3	DEVELOPMENT OF CODED MATHEMATICAL EXPRESSIONS	
	1. Approach	3-1
	2. Matrix Formats for Detail Procedure and Procedure C	3-1
	3. Matrix Formats for Procedure B	3-5
	4. Data Matrices	3-11
	5. Coded Mathematical Expressions	3-32
4	PREPARATION OF SYSTEM FLOW CHARTS	
	1. Flow Chart Development	4-1
	2. Flow Chart Format	4-1
APPENDIX	DEMONSTRATION CHECK DATA	
	1. Demonstration Check for the Detail Procedure	1
	2. Demonstration Check for Procedure C	33
	3. Demonstration Check for Procedure B	82

SECTION I

FUNCTIONAL ANALYSIS OF THE DETAIL AND SUPPLEMENTARY CORRECTIVE MAINTENANCE BURDEN PREDICTION PROCEDURES

SECTION I

FUNCTIONAL ANALYSIS OF THE DETAIL AND SUPPLEMENTARY CORRECTIVE MAINTENANCE BURDEN PREDICTION PROCEDURES

FUNCTIONAL ANALYSIS. The first task in the development of System Anal- ; procedures included a functional analysis to identify those elements of the CMB Prediction cedures that are conducive to automatic data processing. As a result of the analysis of each the four CMB Prediction Procedures, it was concluded that Procedure A was not of sufficient nplexity to warrant automatic data processing. However, Procedure B, Procedure C, and the tail Procedure do warrant automatic data processing, even though some manual processing will l be required for each procedure. The functional analysis and conclusions reached are des- bed in this section.

ANALYSIS OF PROCEDURAL INSTRUCTIONS. The procedural in- ıctions as presented in New Developments Research Branch Report No. ND 65-36, dated ıe 1965, and Volume II of Report No. ND 65-31, dated March 1965, were analyzed to iso- e each procedural step that is conducive to automatic data processing (ADP) application. :h step followed in a manal application of the Detail (Original) Procedure, Procedure C, cedure B, and Procedure A was studied to determine: 1) those steps that require analytical gment and, therefore, are not adaptable to ADP; 2) those steps that are entirely quantita- e in nature and, are therefore, readily adaptable to ADP; 3) those steps that are qualitative ıature but are performed with sufficient objectivity to permit coding of qualitative parameters ADP application; and 4) those steps that are quantitative or qualitative in nature, but are formed as interim steps which would be redundant in an ADP application.

2.1 Analysis of Procedural Steps For The Detail Procedure. This paragraph presents step-by-step analysis of the Detail Procedure. The steps indicated below, refer to the cedural steps in Report No. ND 65-36.

Steps 1 and 2 (Equipment Breakdown Diagram). Preparation of the heir- archical equipment breakdown diagram requires an analysis of equipment de- sign data to determine the physical relationship of functional subdivisions, and to break the equipment down into its various groups, units, assemblies, and subassemblies. This task requires analytical judgment.

Step 3 (Replaceable Items). The identification of replaceable items re- quires interpretation of documentation concerning the maintenance and sup- port approach established for the equipment, and an analysis to relate this approach to the equipment breakdown. This task requires analytical judg- ment.

Step 4 (Functional Location of Maintenance Aids). Determining the ef- fective functional location of equipment design features that are provided to facilitate localization, isolation and alignment requires an analysis of schematic diagrams and other technical documentation. This task requires analytical judgment.

Step 5 (Maintenance Task Functional Levels). The effective functional levels for the various maintenance tasks are determined objectively based on the characteristics of the equipment breakdown, the identification of replaceable items, and the effective functional location of maintenance aids. All of these factors are established during previous steps. This is a qualitative task.

Steps 6 through 15 (Equipment Functional Breakdown). The initial steps in the preparation of the CMB Preliminary Data Sheet involves listing all physical subdivisions of the equipment in a manner that presents the functional breakdown in a tabular form. The information presented is the same as that shown graphically on the equipment breakdown diagram developed during Steps 1 and 2. This is a qualitative task.

Step 16 (Replaceable Item Data). Replaceable items are identified on the CMB Preliminary Data Sheet based on data previously recorded on the Functional Breakdown Diagram. No new data are generated during this qualitative step. This task would be redundant for ADP application.

Step 17 (Replaceable Item Failure Rates). The failure rate of each replaceable item is calculated and recorded on the CMB Preliminary Data Sheet. This task involves counting the number of high failure rate parts included in the item and multiplying these numbers by standardized values of average part category failure rates. This task involves both analytical and quantitative functions.

Steps 18 through 23 (Maintenance Task Types). Maintenance task type symbols are entered on the CMB Preliminary Data Sheet in locations that indicate the effective functional levels for the maintenance tasks associated with each replaceable item. The appropriate locations of the task type symbols are determined based on the maintenance task functional levels previously established on the Functional Breakdown Diagram. This is a qualitative task, parts of which would be redundant for ADP application.

Steps 24 through 29 (Maintenance Task Type Complexity). The task of determining task type complexities requires an analysis of design data to determine the relative complexity of maintenance tasks that will be performed. This task is basically analytical, but involves qualitative interpretations based on technical documentation. The qualitative portion of this task would be redundant for ADP application.

Steps 30, 31, and 32 (Test Equipment, Disposition and Remarks). Notes are recorded on the CMB Preliminary Data Sheet to indicate types of test equipment that will be required in performing the maintenance actions, the disposition of items that are replaced during primary corrective maintenance, and factors that contribute to requirements for special selection and training of maintenance personnel. The notes though qualitative, are adaptable to a standardized format, but analytical judgment is required to establish the particular note applicable to each case.

Step 33 (Maintenance Actions). The maintenance actions performed in the event of failure of each replaceable item is identified on the CMB Task Analysis Form using standardized statements. The appropriate statement is established using previously developed information. These statements are recorded for identification purposes only, and are not essential to an ADP application. This is a qualitative task.

Step 34 (Maintenance Task Data). Data to indicate the task type complexity and effective functional levels for each identified maintenance action are recorded on the CMB Task Analysis Form. These data are obtained by interpreting data recorded on the CMB Preliminary Data Sheet. This is a qualitative task.

Step 35 (Failure Rate Data). Failure rate data for each replaceable item are transcribed to the CMB Task Analysis Form. These data are recorded to facilitate subsequent calculations. This is a quantitative task.

Step 36 (Average Task Times). Average task times for each task type associated with each replaceable item are determined and recorded on the CMB Task Analysis Form. These data are determined from a table of standard average task times. The task times are functions of replaceable items, effective functional levels and task type data developed earlier in the analysis. This task involves both quantitative and qualitative functions.

Step 37 (Task Maintenance Burden TMB). The failure rates are multiplied by the average task times and the products recorded in columns corresponding to the associated task type complexity. This is a quantitative task.

Step 38 (Total TMB). The previously recorded TMB values are summed by task type complexity and the totals are recorded at the bottom of the respective columns. This is a quantitative task. Because the sum of the TMB's recorded are subtotals, that will be summed later to obtain the Corrective Maintenance Burden, this task would be redundant for ADP application.

Steps 39, 40, and 41 (Special Selection Criteria, Training Requirements, and Remarks). Notes that can be stated in a standardized format are recorded on the CMB Task Analysis Form to indicate special requirements associated with each task. These notes are transcribed from the CMB Preliminary Data Sheet, and are directly keyed to particular maintenance actions and task types. These tasks are qualitative but would be redundant for ADP application.

Steps 42 and 43 (Σ TMB Values). The TMB values from the CMB Task Analysis Forms are summarized on the CMB Summary Sheet by recording the ΣTMB values calculated in Step 38. This is an interim quantitative task to facilitate final summing of all TMB values and would be redundant for ADP application.

Steps 44, 45, and 46 (The CMB). The CMB is determined by summing all $\sum$ TMB values by task type complexity. Also, the total equipment maintenance time is determined by summing the CMB values. This is a quantitative task, portions of which would be redundant for ADP application.

Step 47 (CMB Time Base). The CMB values are converted to a meaningful time base of 1000 hours of equipment operation in lieu of the 10^6 hour time base that was used to facilitate analysis. This is a quantitative task.

Steps 48 and 49 (Special Requirements Data). Data concerning special selection or training requirements, associated maintenance action, and task maintenance burden are recorded on the CMB Special Requirements Sheet. These data are transcribed directly from the CMB Task Analysis Form. This is both quantitative and qualitative tasks.

Steps 50, 51, and 52 (Special Requirements Totals). The special requirements TMB values are summed to determine the portion of the CMB requiring special training. Also, these values are subtracted from the total CMB to determine the portion of the CMB not subject to special requirements. This is a quantitative task, portions of which would be redundant for ADP application.

Maintenance Personnel Requirements. The results of the CMB analysis are used to predict the number of hours that personnel of various skill levels will be required to perform primary corrective maintenance on the subject equipment. This personnel requirement analysis is performed as follows:

a. Skill, knowledge, and training requirements are established for each task type complexity. The requirements for a "typical" equipment are obtained from a table where they are presented in a standardized format. Special requirements are a principle output from the CMB analysis.

b. Skill levels of personnel who possess the skills and knowledge necessary to perform each task type on the subject equipment are determined by comparing the skill and knowledge requirements determined as in (a) above with job or rating descriptions for electronic maintenance personnel. In particular, the requirements as determined from the CMB prediction are compared with the standard requirements for advancement in rating as presented in NAVPERS 18068.

c. The CMB values for all task types that can be performed by each rate and rating are summed to determine the corrective maintenance burden by skill level.

This analysis to determine maintenance personnel requirements is both quantitative and qualitative, and involves the application of maintenance skill and knowledge requirements that can be directly compared with qualifications for advancement in rating. All factors involved are objective in nature and can be written in a standardized format which is conducive to coding and ADP application.

2.2 Analysis of Procedural Steps For Procedure C. This paragraph presents the step-by-step analysis of Procedure C. The steps indicated below refer to the procedural steps in Section 3 of Report No. ND 65-31, Volume II.

Step 1 (Functional Breakdown Diagram). The preparation of the Functional Block Diagram requires determining functional elements contained in each physical subdivision. This determination requires a study of packaging documentation to associate the physical breakdown with circuit functions, and to establish subgroupings to the lowest level possible. This task requires analytical judgment.

Step 2 (Functional Breakdown). The functional breakdown is performed by establishing the relative level of each subdivision, and indicating the breakdown in tabular form on a specialized worksheet. This task involves interpretation of graphical presentation and, therefore, requires some analytical judgment.

Step 3 (Replacement Levels). Replacement levels are determined from system development documentation. A maintenance support policy would usually be studied to determine the level or type of items that will be replaced. The functional breakdown would then be analyzed to establish the replaceable items. The replacement level is then determined based on the location at which an item is identified on the worksheet. This is an analytical task.

Step 4 (Maintenance Features). The effective functional levels of the maintenance features are determined based on design factors such as effective functional location of localization aids and test points, physical subgrouping, type of replaceable items, etc. This determination requires considerable analytical judgment.

The complexity of the maintenance task depends on the type of maintenance features. The complexity is determined objectively based on a given set of rules concerning the characteristics of maintenance features, but a certain amount of analytical judgment is requirement to determine whether the respective features are included in the design.

Step 5 (Average Task Times). The average task times are determined from a table based on pre-established replacement level and maintenance feature data. This task involves both quantitative and qualitative functions. Numerical values are determined based on qualitative factors.

Step 6 (Failure Rates). Failure rates are determined based on the quantity of high failure rate parts and standard average failure rate data. The part count will usually have to be estimated based on available design documentation, and therefore, requires analytical judgment. However, once the part count has been established, failure rate calculation involves only a table look-up and arithmetic operation. This portion of the task is quantitative.

Step 7 (Task Maintenance Burden). The TMB is determined by a simple multiplication of the previously determined ATT and failure rate quantities. This is a quantitative task.

Step 8 (Corrective Maintenance Burden). The Corrective Maintenance Burden is determined by summing the TMB values by task type. This is a quantitative task.

Skill Level Analysis. Skill level requirements are established by: 1) performing a standard task type to skill level conversion, and 2) summing of CMB's by skill levels. This task involves both quantitative and qualitative functions.

Maintenance Personnel Requirements. The required rate and rating of maintenance personnel is established by means of a direct conversion from skill levels. Therefore, the task of establishing primary corrective maintenance personnel requirements is an objective translation of pre-determined data. This is a qualitative task.

2.3 Analysis of Procedural Steps For Procedure B. This paragraph presents the step-by-step analysis of Procedure B. The steps indicated below refer to the procedural steps in Section 2 of Report No. ND 65-31, Volume II.

Step 1 (Maintenance Plans). Maintenance plans are established based on the general type of item that is to be replaced, the general functional level of localization aids, and the general functional level of test points. A block diagram is prepared to aid in establishing maintenance plan data. This task requires analytical judgment in the interpretation of design documentation. Once the diagram is prepared, maintenance plans are established objectively. This task involves both analytical and qualitative functions.

Step 2 (Repair Times). Repair times are determined from a table based on the particular maintenance plans that are used. This task involves both quantitative and qualitative functions.

Step 3 (Failure Rate). The specified or predicted equipment failure rates are used for the maintenance time prediction. These data are obtained through analytical interpretation of equipment development documentation.

Step 4 (Repair Time). Equipment repair time is determined arithmetically. This is a quantitative task.

Step 5 (Equipment Design Factors Influencing Skill Level Requirements). Skill level requirements are determined based on three factors which are established based on analytical interpretation of equipment development documentation. These factors relate to the type of fault indicators used, the application of advanced state-of-the-art concepts, and the requirement for extensive non-electronic maintenance.

Step 6 (Skill Level Percentages). The skill level percentages are obtained from a table based on the skill level factors established in Step 5 above. This task involves both quantitative and qualitative functions.

Step 7 (Skill Level Requirements). Skill level requirements are determined arithmetically based on factors determined in Steps 4 and 6. This is a quantitative task.

Maintenance Personnel Requirements. Maintenance personnel requirements are obtained by direct, objective data conversion. This is a qualitative task.

2.4 Analysis of Procedural Steps For Procedure A. This paragraph presents the step-by-step analysis of Procedure A. The steps indicated below refer to the procedural steps in Section 1 of Report No. ND 65-31, Volume II.

Step 1 (Equipment MTTR). The equipment MTTR is determined by establishing the applicable maintenance plan(s) (i.e., the method of repair and method of fault location) and, based on these data, obtaining a predicted MTTR range from a table. The first portion of this task requires analytical judgment in the interpretation of equipment development documentation. The second portion of this task requires a table look-up to obtain numerical values and involve both quantitative and qualitative functions.

Step 2 (Equipment Failure Rate). Failure rates are determined by either of two methods depending on the development data available. If the equipment MTBF has been specified, the failure rate is determined by arithmetic calculations. If the MTBF has not been specified, the failure rate is objectively estimated based on a table of typical equipment failure rates. A final calculation is performed to allocate the overall equipment failure rate among the various portions of the equipment. This task involves analytical, quantitative and qualitative functions.

Step 3 (Equipment Repair Times). Equipment repair time is determined by an arithmetical operation involving the quantities established in Steps 1 and 2 above. This is a quantitative task.

Step 4 (Maintenance Skill Level Percentages). Maintenance skill level requirements are based on pre-established skill level requirements for a "typical" equipment and on maintenance factors concerning application of advancement in the state-of-the-art and non-electronic items. The maintenance factors are determined through analytical interpretation of development documentation. However, once these factors have been established, the skill level percentages are established by table look-up and involves both quantitative and qualitative functions.

Step 5 (Corrective Maintenance Burden). The Corrective Maintenance Burden, in terms of maintenance time for each skill level, is determined by arithmetical operations involving values established in previous steps. This is a quantitative task.

Maintenance Personnel Requirements. Maintenance personnel requirements are derived by direct data conversion. This is a qualitative task.

3. SUMMARY OF ANALYSIS. The results of the analyses of the Detail Procedure, Procedure C, Procedure B, and Procedure A, are summarized in Table 1, Table 2, Table 3, and Table 4, respectively. The numbers in the "Procedural Step(s)" column refer to the steps of the respective Procedural Instructions."[1] The general character of the work performed by the CMB analyst in executing each procedural step is categorized in the "Type of Task" column. The checks in the "Adaptability to ADP" column correspond to the type of task performed for each procedural step, and indicate: 1) the step is such, that manual processing is essential and, therefore, not adaptable to ADP; 2) the step is quantitative and readily adaptable to ADP techniques; 3) the step is qualitative but of a nature that coding and ADP application is practical; or 4) the step is used to facilitate manual analysis and is redundant in an ADP application.

4. CONCLUSIONS ON THE DETAIL PROCEDURE. Based on the results of the analysis of the detail procedure, the following conclusions were drawn concerning the application of ADP techniques to the various portions of the procedure.

[1] The Procedural Instructions referenced for the various procedures are:
Detail Procedure: Report No. ND 65-36
Procedure C: Report No. ND 65-31, Volume II, Section 3
Procedure B: Report No. ND 65-31, Volume II, Section 2
Procedure A: Report No. ND 65-31, Volume II, Section 1

Table I-1. Summary of Detail Procedure Analysis

ıcedural tep(s)	Procedural Task	Type of Task	ADAPTABILITY TO ADP: NA (Manual Req.)	OK (Quan.)	OK (Qual.)	Redundant For ADP	Remarks
	FUNCTIONAL BREAKDOWN DIAGRAM						
2	Prepare Hierarchical Diagram	Analytical	X				
	Identify Replacement Items	Analytical	X				
	Locate Maintenance Aids	Analytical	X				
	Establish Maintenance Task Levels	Qualitative			X		
	CMB PRELIMINARY DATA SHEET						
15	Record Equipment Breakdown	Qualitative				X	Diagram Info. is adequate
6	Enter Replacement Item Symbols	Qualitative				X	All info. is on Diagram
7	Failure Rate Data						
	a. Count High Failure Parts	Analytical	X				
	b. Calculate Failure Rates	Quantitative		X			
	c. Record Values	Quantitative		X		X	See Step 35
I-23	Maintenance Task Types						
	a. Establish Functional Level	Qualitative			X	X	See Step 5
	b. Record Symbols	Qualitative				X	See Step 34
I-29	Task Type Complexity						
	a. Establish Complexity	Analytical	X				
	b. Record Task Type Complexity	Qualitative				X	See Step 34
10	Test Equipment Requirements						
	a. Establish TE Requirements	Analytical	X				
	b. Record Notes	Qualitative			X		If Phrases are Standardized

Table I-1 Summary of Detail Procedure Analysis (Con'td.)

ocedural tep(s)	Procedural Task	Type of Task	ADAPTABILITY TO ADP: NA (Manual Req.)	OK (Quan.)	OK (Qual.)	Redundant For ADP	Remarks
1	Disposition of Item						
	a. Establish Disposition	Analytical	X				
	b. Record Notes	Qualitative			X		Extra Data
2	Remarks						
	a. Establish Remarks	Analytical	X				
	b. Record Notes	Qualitative			X		If Phrases are Standardized
	CMB TASK ANALYSIS FORM						
3	Identify Maintenance Actions	Qualitative			X		
4	Record Maintenance Task Data	Qualitative			X		
5	Record Failure Rate Data	Quantitative		X			
6	Average Task Times						
	a. Determine ATT's	Qualitative			X		
	b. Record Data	Quantitative		X			
7	Task Maintenance Burdens						
	a. Calculate TMB's	Quantitative		X			
	b. Record Data	Quantitative		X			
8	Total TMB's						
	a. Perform Summations	Quantitative		X		X	Sub Totals
	b. Record Data	Quantitative		X		X	See Steps 42 - 43
9	Special Selection Criteria						
	a. Establish Criteria	Qualitative			X		If Notes are Standardized
	b. Record Notes	Qualitative				X	See Steps 48-49

Table I-1. Summary of Detail Procedure Analysis (Con'td.)

ocedural tep(s)	Procedural Task	Type of Task	ADAPTABILITY TO ADP: NA (Manual Req.)	OK (Quan.)	OK (Qual.)	Redundant For ADP	Remarks
0	Training Requirements						
	a. Establish Requirements	Qualitative			X		If Notes are Standardized
	b. Record Notes	Qualitative				X	See Steps 48-49
1	Remarks						
	a. Establish Remarks	Qualitative			X		If Notes are Standardized
	b. Record Notes	Qualitative				X	See Steps 48-49
	CMB SUMMARY SHEET						
-43	Record TMB's	Quantitative		X		X	
-46	CMB Calculations						
	a. Calculate Sub Totals	Quantitative				X	Sub Total not needed
	b. Record Data	Quantitative				X	Sub Total not needed
	c. Calculate Grand Totals	Quantitative		X			
	d. Record CMB's	Quantitative		X			
47	Time Base Conversion	Quantitative		X			
	CMB SPECIAL REQUIREMENTS SHEET						
3-49	Record Special Requirements Data	Quantitative and Qualitative		X	X		
0-52	Special Requirements Totals						
	a. Sum By Task Type	Quantitative		X			
	b. Record Totals	Quantitative		X			
	c. Record Summary Sheet Totals	Quantitative				X	See Steps 44-46(d)
	d. Subtract Values	Quantitative		X			
	e. Record Differences	Quantitative		X			

Table I-1. Summary of Detail Procedure Analysis (Con'td.)

rocedural Step(s)	Procedural Task	Type of Task	ADAPTABILITY TO ADP: NA (Manual Req.)	OK (Quan.)	OK (Qual.)	Redundant For ADT	Remarks
	MAINTENANCE PERSONNEL REQUIREMENTS						
-	Skill, Knowledge & Training Requirements						
	a. Establish General Requirements	Qualitative			X		
	b. Establish Special Requirements	Qualitative			X		Data from Steps 50-52
-	Maintenance Personnel Skill Levels						
	a. Compare with NAVPERS 18068	Qualitative			X		18068 Data must be coded
	b. Establish Rates & Ratings	Qualitative			X		
-	CMB By Skill Level	Quantitative and Qualitative		X	X		

Procedural Step(s)	Procedural Task	Type of Task	ADAPTABILITY TO ADP: NA (Manual Req.)	OK (Quan.)	OK (Qual.)	Redundant For ADP	Remarks
	EQUIPMENT DESIGN ANALYSIS						
1	Prepare Functional Block Diagram	Analytical	X				
2	Perform Functional Breakdown	Analytical	X				
3	Establish Replacement Levels	Analytical	X				
4	Maintenance Features						
	a. Determine Functional Levels	Analytical	X				
	b. Determine Complexity Levels	Analytical	X				
5	Average Task Times						
	a. Determine ATT's	Qualitative			X		
	b. Record Data	Quantitative		X			
6	Failure Rate Data						
	a. Determine Part Count	Analytical	X				
	b. Calculate Failure Rates	Quantitative		X			
7	Task Maintenance Burdens						
	a. Calculate TMB's	Quantitative		X			
	b. Record Data	Quantitative		X			
8	Calculate CMB						
	a. Sum TMB's by Task Type	Quantitative		X			
	b. Convert Time Base	Quantitative		X			
	SKILL LEVEL ANALYSIS						
	a. Determine Skill Levels by Task	Qualitative			X		
—	b. Sum CMB's by Skill Level	Quantitative		X			
	MAINTENANCE PERSONNEL REQUIREMENTS						
—	Convert Skill Levels to Rate & Rating	Qualitative			X		

Table I-3. Summary of Procedure B Analysis

Procedural Step(s)	Procedural Task	Type of Task	ADAPTABILITY TO ADP: NA (Manual Req.)	OK (Quan.)	OK (Qual.)	Redundant For ADP	Remarks
	EQUIPMENT REPAIR TIME						
1	Maintenance Plans						
	a. Prepare Physical Breakdown Diagram	Analytical	X				
	b. Locate Maintenance Aids	Analytical	X				
	c. Determine Maintenance Plans	Qualitative			X		
2	Repair Times						
	a. Locate Maintenance Plan	Qualitative			X		
	b. Record MTTR	Quantitative		X			
3	Determine Failure Rate	Analytical	X				
4	Calculate Repair Time	Quantitative		X			
	SKILL LEVEL REQUIREMENTS						
5	Determine Equipment Design Factors	Analytical	X				
6	Skill Level Percentages						
	a. Locate Maintenance Plan	Qualitative			X		
	b. Record Skill Level Percentages	Quantitative		X			
7	Calculate Skill Level Requirements	Qualitative		X			
	MAINTENANCE PERSONNEL REQUIREMENTS						
	Convert Skill Levels to Rate and Rating	Qualitative			X		

Table I-4. Summary of Procedure A Analysis

Procedural Step(s)	Procedural Task	Type of Task	ADAPTABILITY TO ADP: NA (Manual Req.)	OK (Quan.)	OK (Qual.)	Redundant For ADP	Remarks
	EQUIPMENT REPAIR TIME						
1	Equipment MTTR						
	a. Establish Maintenance Plans	Analytical	X				
	b. Determine MTTR Ranges	Qualitative			X		
	c. Record Data	Quantitative		X			
2	Equipment Failure Rate						
	a. Using Specified MTBF:						
	(1) Determine MTBF	Analytical	X				
	(2) Calculate	Quantitative		X			
	b. Estimate Failure Rate	Qualitative			X		
	c. Record Data	Quantitative		X			
3	Determine Equipment Repair Times	Quantitative		X			
	SKILL LEVEL REQUIREMENTS						
4	Maintenance Skill Level Percentage						
	a. Determine Maintenance Factors	Analytical	X				
	b. Determine Percentages	Qualitative			X		
	c. Record Data	Quantitative		X			
5	Determine CMB	Quantitative		X			
	MAINTENANCE PERSONNEL REQUIREMENTS						
	Convert Skill Levels to Rate and Rating	Qualitative			X		

4.1 Analytic Tasks. The following tasks are analytic and manual processing will be required.

a. Preparing the Functional Breakdown Diagram, including preparation of the heirarchical diagram, identification of replaceable items, and location of maintenance aids.

b. Performing the high failure rate parts count to provide data for the failure rate calculations.

c. Performing the analyses necessary to establish task type complexities.

d. Determining the test equipment requirements.

e. Determining the disposition of replaceable items.

f. Determining categories of special selection and training requirements and establishing appropriate remarks for each maintenance action.

4.2 Quantitative Tasks. The following data and data processing procedures are entirely quantitative and readily adaptable to ADP techniques.

a. Calculating and recording failure rates (once the high failure parts counts have been performed).

b. Recording Average Task Time (ATT) data.

c. Calculating and recording Task Maintenance Burden (TMB) data.

d. Calculating and recording Corrective Maintenance Burden (CMB) data.

e. Performing Time Base Conversions.

f. Calculating and recording special requirements portion of CMB (once qualitative special requirements data have been coded).

g. Calculating the CMB by skill level (once qualitative skill level data have been coded).

4.3 Qualitative Tasks. The following qualitative data are conducive to coding and/or are derived using objective techniques that can be programmed for automatic data processing.

a. Establishing maintenance task functional levels.

b. Recording Test Equipment Requirements.

c. Recording Disposition of Item Notes.

d. Recording Remarks concerning special selection criteria and training requirements.

e. Identification of maintenance actions.

f. Recording of Maintenance Task Data.

g. Determining Average Task Times.

h. Establishing general and special skill, knowledge, and training requirements and special selection criteria. This is based on factors previously established manually.

i. Comparing skill, knowledge and training requirements with NAVPERS 18068 data.

j. Establishing rates and ratings.

4.4 Redundant Tasks For ADP Application. With five exceptions, the data recorded on the CMB Preliminary Data Sheet are redundant and not required for automatic data processing. New data generated during the preparation of the Preliminary Data Sheet include:

a. Failure Rates

b. Task Type Complexity

c. Test Equipment Requirements

d. Disposition of Item

e. Remarks Concerning Special Requirements

The failure rate, task type complexity, and remarks data are recorded on subsequent worksheets. The test equipment and disposition of item data are not recorded on subsequent worksheets during a manual analysis. However, these are supplementary data that can be recorded later during the analysis without degrading the results. From the above, it is apparent that the steps concerning the preparation of the CMB Preliminary Data Sheet are not essential to the application of ADP techniques.

5. CONCLUSIONS ON PROCEDURE C. Based on the results of the analysis, the following conclusions were drawn concerning the applicability of ADP techniques to the various portions of Procedure C.

5.1 Analytic Tasks. The following tasks are analytic and manual processing will be required.

a. Preparing a Functional Breakdown Diagram.

b. Performing the functional breakdown.

c. Establishing replacement levels.

d. Determining effective functional levels of maintenance features.

e. Establishing task type complexity.

f. Performing high failure rate parts count.

5.2 Quantitative Tasks. The following data and data processing procedures are entirely quantiative and directly adaptable to ADP techniques.

a. Recording Average Task Time (ATT) data.

b. Calculating failure rates (once the high failure rate parts count has been performed).

c. Calculating and recording Task Maintenance Burden (TMB) values.

d. Calculating CMB values.

e. Converting CMB time base.

f. Summing CMB's by skill level.

5.3 Qualitative Tasks. The following qualitative data are conducive to coding and/or derived using objective techniques that can be programmed for automatic data processing.

a. Determining average time values.

b. Relating task type to skill level.

c. Converting skill levels to rate and rating requirements.

6. CONCLUSIONS ON PROCEDURE B. Based on the results of the analysis, the following conclusions were drawn concerning the applicability of ADP techniques to various portions of Procedure B.

6.1 Analytic Tasks. The following tasks are analytic and manual processing will be required.

a. Preparing a physical breakdown diagram.

b. Locating maintenance aids.

c. Obtaining failure rates.

d. Determining equipment design factors relating to skill level requirements.

6.2 Quantitative Tasks. The following data and data processing procedures are entirely quantiative and directly adaptable to ADP techniques.

a. Recording MTTR data.

b. Calculating Repair Times.

c. Recording Skill Level Percentages.

d. Calculating Skill Level Requirements.

6.3 Qualitative Tasks. The following qualitative data are conducive to coding and/or are derived using objective techniques that can be programmed for automatic processing.

a. Determining maintenance plans (once physical breakdown is established and maintenance aids are located).

b. Determining repair times (based on predetermined maintenance plan).

c. Determining skill level percentages (based on predetermined maintenance plan and equipment design factors).

d. Converting skill level requirements to rate and rating.

7. CONCLUSIONS ON PROCEDURE A. It was apparent that all but three of the analysis tasks are conducive to automatic processing. However, the time required to manually perform those tasks that are conducive to automatic processing is insignificant as compared to the time required to perform the three tasks that involve analytical judgment and interpretation. Therefore, it is apparent that automatic processing for Procedure A will not be economically justifiable. This conclusion is based on the following analysis.

7.1 Analytic Tasks. The following tasks are analytic and will require manual processing.

a. Establishing maintenance plan.

b. Interpreting reliability specification documentation to establish MTBF.

c. Establishing maintenance factors for skill level determination.

7.2 Quantitative Tasks. The following data and data processing procedures are entirely quantitative and are directly adaptable to ADP techniques.

a. Recording MTTR range data.

b. Calculating failure rates when MTBF is given.

c. Recording failure rate data.

d. Determining equipment repair time.

e. Recording skill level percentage data.

f. Determining CMB.

7.3 Qualitative Tasks. The following qualitative data are conducive to coding and/or are derived using objective techniques that can be programmed for automatic processing.

a. Determining MTTR ranges (once the maintenance plans have been established).

b. Estimating failure rates when "typical" failure rates are used.

c. Determining skill level percentages.

d. Determining Personnel Requirements.

SECTION 2

DEVELOPMENT OF CMB DATA FORMATS AND CODING PROCEDURES

SECTION 2

DEVELOPMENT OF CMB DATA FORMATS AND CODING PROCEDURES

. DATA FORMAT REQUIREMENTS. The task of preparing CMB analysis data or ADP application will be most efficiently performed if the data developed during the manual ortions of the analysis are coded and recorded in a manner that permits direct key punching om the input data sheets. Since any such coding of input data must be considered in the delopment of the computer program it was necessary to develop the coding and format before roceeding with the development of the mathematical expressions and flow diagrams.

The input data requirements for the three procedures under consideration were analzed in the detail and coding techniques were developed for each type of data. Once such oding techniques were established, it was possible to design Input Data Sheets which would) permit efficient recording of CMB analysis input data, and 2) permit direct key punchng of these data without additional editing or coding.

The Input Data Sheets, as developed for the Detail Procedures, Procedure C, and rocedure B are presented in paragraph 2 of this section together with descriptions of the ecommended method of coding and recording input data. The actual codes have been conlidated in paragraph 3 for ease of reference. Suggested formats for recording output data re discussed in paragraph 4.

. INPUT DATA SHEETS. The suggested formats for the Input Data Sheets for ach of the three procedures are illustrated in Figures 2-1 through 2-3. The exact format is ot critical. However, it is recommended that the coding and relative column number assignents be retained as indicated in order to assure compatibility with the mathematical expresons and computer programming flow charts.

2.1 Input Data Sheet For The Detail Procedure. The Input Data Sheet illustrated Figure 2-1 provides a format for recording all input data required in the application of e Detail Procedure. The first two data lines are intended for recording pertinent identication data such as the nomenclature of the equipment being analyzed. These data will key punched on two separate cards. Each line of analysis data can be accommodated one card.

The methods for coding the Detail Procedure input data are described below:

a. Nomenclature (Columns 1 to 12 of Card A). Direct alphanumeric equipment nomenclature designation, (e.g., AN/SPS-28). If more than twelve spaces are required for the complete nomenclature, shortened forms can be used provided the portions omitted are obvious. For example, "AN/XYZ-28(XN-1)" could be shortened to either "XYZ-28(XN-1)", or "ANXYZ28XN-1."

INPUT DATA SHEET

PAGE ____ OF ____

A NOMENCLATURE : EQUIP. category

B ANALYST Date Mo. day year

C

ITEM IDENTIFICATION						HIGH FAILURE RATE PARTS COUNT														TASK TYPE AND COMPLEXITY								TEST EQUIP.			SKILL KNOWLEDGE AND TRAINING REQUIREMENTS						
EQUIPMENT	GROUP	UNIT	ASSEMBLY	SUBASSEMBLY	REPL. ITEM	RECEIVING TUBES	SPECIAL PURPOSE & TRANS. TUBES	CRT TUBES	MAGNETRONS	TRANSISTORS	DIODES	RELAYS	VIBRATORS	SYNCHROS	RESOLVERS	BLOWERS	OTHER MOTORS	VACUUM CAP.	L1	L2	L3	IS1	IS2	A1	A2	IN1	IN2	AL1	AL2	C1	C2	T1	T2	DISP. OF ITEM	R1	R2	R3	R4	R5	R6	LAST CARD

FIGURE 2-1 INPUT DATA SHEET
DETAIL PROCEDURE

INPUT DATA SHEET

PAGE ____ OF ____

A NOMENCLATURE | EQUIP. category

B ANALYST | Date Mo. day year

C

ITEM IDENTIFICATION					HIGH FAILURE RATE PARTS COUNT													TASK TYPE AND COMPLEXITY						TEST EQUIP.			SKILL KNOWLEDGE AND TRAINING REQUIREMENTS						
EQUIPMENT GROUP	UNIT	ASSEMBLY	SUBASSEMBLY	REPL. ITEM	RECEIVING TUBES	SPECIAL PURPOSE & TRANS. TUBES	CRT TUBES	MAGNETRONS	TRANSISTORS	DIODES	RELAYS	VIBRATORS	SYNCHROS	RESOLVERS	BLOWERS	OTHER MOTORS	VACUUM CAP.	L1	L2	L3	IS1	IS2	A1	A2	IN1	IN2	AL1	AL2	C1	C2	T1	T2	DISP. OF ITEM	R1	R2	R3	R4	R5	R6	LAST CARD

FIGURE 2-2 INPUT DATA SHEET
PROCEDURE C

INPUT DATA SHEET

PAGE _____ OF _____

A	NOMENCLATURE	SUM EQUIP. MAJOR SBDVS.	EQUIPMENT FAILURE RATE	EQUIPMENT MEAN TIME BETWEEN FAILURE	EQUIP. CAT.
B	ANALYST			DATE mo. day year	
C	ITEM IDENT.		MAINT. FEATURES		
	MAJOR SUBDIVISIONS	REPL. ITEM	LOCALIZATION LEVEL	ISOLATION LEVEL	FAILURE INDICATION	ADV. IN STATE-OF-ART	NON-ELECTRONIC MAINT.

FIGURE 2-3 INPUT DATA SHEET
PROCEDURE B

b. Equipment Category (Columns 13 to 16 of Card A). A four digit code to indicate the category of equipment being analyzed. The codes are as presented in Table 2-1.

c. Analyst (Columns 1 to 20 of Card B). Direct entry of the name of the CMB analyst. This should be limited to not more than 20 letters, punctuation marks and spaces.

d. Date (Columns 21 to 26 of Card B). Numerical indication of the month, day, and the last two digits of the year. A number of 9 or less should be preceded with zero. For example, June 5, 1966 would be coded 060566.

e. Item Identification (Columns 1 to 9 of Card C). Numerical code uniquely identifying the particular item to which the associated line of data applies. The unit, assembly and subassembly identification code is derived using the MIL-STD-16C nomenclature system without the alpha code. For example, subassembly 1A2A321 would be coded 0102321, and assembly 10A23 would be coded 1023000. The group is identified by a 1 digit code that can be established by sequentially numbering the groups. The entry in the equipment column (Column 1) is 1 if zeros are recorded in all other columns (Column 2 through Column 9). Otherwise, a zero is recorded in this column.

f. Replaceable Item (Column 10 of Card C). A one digit number indicating the functional level of the replaceable item. This number is obtained from Table 2-2.

g. High Failure Rate Parts Count (Columns 11 to 36 of Card C). A series of numbers directly indicating the number of parts in each of thirteen high failure rate part categories, included on the replaceable item. Entries should be made in each column. If there are no parts of a given category, zeros should be entered in all respective columns. If the number of digits in the parts count is less than the number of columns provided for that category, the number should be justified to the right and zeros entered in the remaining columns. For example, 20 transistors would be entered as 020.

h. Task Type and Complexity (Columns 37 to 49 of Card C). A one digit code is entered in the apporpriate complexity column for each Task Type. The effective functional level is indicated for each Task Type using the codes in Table 2-2.

i. Test Equipment (Columns 50 to 53 of Card C). A two digit code indicating the type of test equipment required to perform the maintenance action. The test equipment codes are listed in Table 2-3. Space is provided for indicating requirements for two different types of test equipment. If more than two test equipments are required, the next line is used and the item identification is repeated in the appropriate spaces.

j. Disposition of Items (Column 54 of Card C). A one digit code indicating the disposition of the defective item. The codes for this entry are listed in Table 2-4.

k. Skill Knowledge and Training Requirements (Columns 55 to 78 of Card C). Four digit codes indicating areas of skill and knowledge in which special training is required. Space is provided for indicating special requirements for each of the six Task Types. Codes for skill and knowledge factors are listed in Table 2-8. This table is divided into five major groups according to general subject matter as follows:

GROUPS	SUBJECT
0000	Precautions
1000	Fundamentals and Principles
2000	Theory
3000	Techniques, Methods and Procedures
4000	Use and Applications

Each major group is subdivided into subgroups. For example, Group 0000 - Precautions, is divided into two subgroups. 0100 - Safety Precautions, and 0200 - Use and Applications Precautions. Each such subgroup is further subdivided by specific subject, and a final subdivision indicating particular items of interest.

l. Last Card (Column 80 of Card C). A one digit code indicating when the last card has been processed. The last card is indicated by entering a "1" in this column. Otherwise a "0" is entered.

2.2 Input Data Sheet For Procedure C. The Input Data Sheet for Procedure C, as illustrated in Figure 2-2, is the same as the sheet for the Detail Procedure. However, zeros are pre-printed in all columns that are not completed in the application of Procedure C. These zeros make possible the use of the same computer program for either procedure.

2.3 Input Data Sheet For Procedure B. The Input Data Sheet illustrated in Figure 2-3 provides a format for recording all input data required for the application of Procedure B. The first two data lines are intended for recording pertinent identification data as well as data concerning the overall equipment. These two lines of data are to be key punched on two separate cards. Each line of analysis is key punched on a separate card (Card Type C).

The method for coding Procedure B input data is described below:

a. Nomenclature (Columns 1 to 12 of Card A). Direct alphanumeric equipment nomenclature designation, (e.g., AN/XYZ-28). If more than twelve spaces are required for the complete nomenclature, shortened forms can be used provided the portions omitted are obvious. For example, "AN/XYZ-28(XN-1)" could be shortened to either "XYZ-28(XN-1)" or "ANXYZ28XN-1."

b. Sum Equipment Major Subdivisions (Columns 13 to 15 of Card A). A direct count of the total number of major equipment subdivisions included in the equipment. This will be equal to the number of data cards (Card C) required.

c. Equipment Failure Rate (Columns 16 to 21 of Card A). A direct entry of the specified or predicted equipment failure rate in failures per 1000 hours. This entry should be justified to the right, and zeros should be entered in all unused spaces. If the equipment failure rate is not known, zeros should be entered in all spaces.

d. Equipment Mean-Time-Between-Failures (Columns 22 to 27 of Card A). A direct entry of the specified or predicted equipment MTBF in hours. This entry should be justified to the right and zeros should be entered in all unused spaces. If the equipment MTBF is not known, zeros should be entered in all spaces.

e. Equipment Category (Columns 28 to 31 of Card A). A four digit code to indicate the category of equipment being analyzed. The codes are as presented in Table 2-1.

f. Analyst (Columns 1 to 20 ofCard B). Direct entry of the name of the CMB analyst. This should be limited to not more than 20 letters, punctuation marks and spaces.

g. Date (Columns 21 to 26 of Card B). Numerical indication of the month, day and the last two digits of the year. A number of 9 or less should be preceded with a zero. For example, June 5, 1966 would be coded 060566.

h. Item Identification (Columns 1 to 3 of Card C). A number identifying the particular major subdivision of the equipment. These numbers are generated by the analyst by arbitrarily assigning sequential identification numbers to the major subdivisions under consideration. The entries should be justified to the right and zeros should be entered in all unused spaces.

i. Replaceable Items (Column 4 of Card C). A one digit number indicating the general functional level of replaceable items of the major equipment subdivision identified in Columns 1 to 3. This number is obtained from Table 2-2.

j. Maintenance Features (Columns 5 to 9 of Card C). One digit codes indicating the effective functional level of localization and isolation features, the general type of failure indication, and the presence or absence of advances in the state-of-the-art and non-electronic maintenance features. These data are coded using the following tables:

Table 2-2	Localization Level
Table 2-2	Isolation Level
Table 2-5	Failure Indication
Table 2-6	Advance In State-of-the-Art
Table 2-7	Non-Electronic Maintenance

3. INPUT DATA CODES. The special codes to be used by the CMB Analyst i completing the Input Data Sheets are shown in Tables 2-1 through 2-8.

Table 2-1. Equipment Category

CODE	CATEGORY
1310	Radar
1320	Communications
1330	Navigational Aids
1340	Computer
1350	Test Equipment (General Purpose)
1370	
1380	
1390	Sonar

Table 2-2. Functional Levels

CODE	FUNCTIONAL LEVEL
1	Part
2	Stage
3	Subassembly
4	Assembly
5	Unit
6	Group
7	Equipment

Table 2-3. Test Equipment Types

CODE	TEST EQUIPMENT	CODE	TEST EQUIPMENT
01	Meter, Electrical Frequency	49	Oscilloscope
02	Ammeter, Recording	53	Probe
03	Meter, Electron Tube Tester	56	Resistor, Decode
06	Bolometer, Radio Frequency	57	Resonator, Tuning Fork
07	Calibrator, Frequency	58	Ring, Meter Calibration
09	Capacitance Standard, Fixed	60	Shunt, Instrument
10	Capacitor, Decode	62	Signal Generator
11	Meter, Fluxmeter	63	Simulator, Antenna Position
12	Meter, Magnetron Current	64	Standing Wave Indicator
13	Meter, Modulation	65	Stroboscope
14	Meter, Pulse Width	66	Sweep Generator
15	Chart, Recording	69	Tip, Test Prod
17	Converter, Wave Form	70	Transducer, Motional Pickup
18	Coupler, Directional	71	Meter, Arbitrary Scale
20	Meter, S-Units	73	Voltage Standard
21	Meter, Standing Wave Radio	75	Voltmeter, Electronic
23	Mirror, Oscillograph	76	Wattmeter
24	Delay Line	78	Absorber, RF, Radiation
26	Disk, Light Interrupting	79	Adapter, Test
27	Disk Stroboscope	80	Ammeter
29	Dummy Load, Electrical	81	Meter, Audio Level
30	Electrical Meter Subassembly	82	Multimeter
31	Filter, Light, Cathode Ray Tube	84	Prod. Test
32	Frequency Meter	85	Voltmeter
33	Galvanometer	86	Wavemeter
37	Indicator, Azimuth	90	Bridge, Impedance
38	Indicator, Standing Wave Ratio	91	Generator, Pulse
39	Inductance Standard, Fixed	94	Indicator, Line Voltage
40	Inductance Standard, Variable	95	Indicator, Phase Sequence
42	Meter, Antenna Tilt		
45	Ohmmeter		
46	Oscillator, Audio Frequency		
47	Oscillator, Radio Frequency		

Table 2-4. Disposition of Item

CODE	DISPOSITION
1	Throw-away
2	To Bench Maintenance
3	To Tender Maintenance
4	To Depot Maintenance

Table 2-5. Failure Indication

CODE	TYPE
1	Go-No-Go
2	Analog

Table 2-6. Advance In State-of-the-Art

CODE	ADVANCE
1	No
2	Yes

Table 2-7. Non-Electronic Maintenance

CODE	NON-ELECTRONIC MAINTENANCE
1	No
2	Yes

Table 2-8. Skill, Knowledge and Training Factors

0000 PRECAUTIONS

0100 SAFETY

0110 Electric Shock

0111	Opening Electrical Equipment, working on energized circuits
0112	Effect of electric shock
0113	Working Alone
0114	
0115	
0116	
0117	
0118	
0119	

0120 Working Aloft

0121	Use of lifelines, safety belts, etc.
0122	
0123	
0124	
0125	
0126	
0127	
0128	
0129	

0130 Radiation Hazards

0131	High Power RF
0132	Xray
0133	Radioactivity
0134	
0135	
0136	
0137	
0138	
0139	

0000 PRECAUTIONS

0200 USE AND APPLICATION

0210 Tools

0211	Hand Tools
0212	Power Tools, Portable
0213	Power Tools, Fixed
0214	
0215	
0216	
0217	
0218	
0219	

Table 2-8. Skill, Knowledge and Training Factors
(Continued)

0220	Batteries	
	0221	Battery Acid
	0222	Battery Fumes
	0223	
	0224	
	0225	
	0226	
	0227	
	0228	
	0229	
0230	Lubricants and Solvents	
	0231	Importance of using proper lubricants and solvents
	0232	Precautions for using solvents
	0233	
	0234	
	0235	
	0236	
	0237	
	0238	
	0239	

Table 2-8. Skill, Knowledge and Training Factors
(Continued)

1000 FUNDAMENTALS AND PRINCIPLES

1100 ELECTRICITY, ELECTRONICS, MECHANICS

1110 Basic Electrical Terms and Definitions

1111	Voltage, Current, Resistance, Power, AC, DC
1112	Average, Effective, RMS, Peak, Peak-to-Peak
1113	Radio Frequency, Intermediate Frequency, Audio Frequency
1114	Inductance, Self Inductance, Natural Inductance, Capacitance, Reactance, Impedance
1115	Frequency, Resonance, Phase, Wavelength, Power Factor, Q
1116	Pulse Rate, Pulse Width, Rise Time, Fall Time, Amplitude, Waveshape
1117	Magnetism, Eddy Current, Flux Density, Reluctance, Permeability, Hysterisis
1118	
1119	

1120 Electronic Terms and Definitions

1121	Amplification, Attenuation, Filtering
1122	Rectification, Detection, Conversion, Heterodyne, Zero Beat
1123	Modulation, Demodulation, Discrimination
1124	Reception, Transmission, Field Intensity
1125	Sensitivity, Selectivity, Noise Figure, Standing Wave Ratio
1126	Sideband, Single Sideband
1127	Tuning, Ganged Tuning, Autotune
1128	
1129	

1130 Mechanical Terms and Definitions

1131	Lever, Gear, Can
1132	Hydraulic, Pneumatic
1133	Gyroscope, Precession, etc.
1134	
1135	
1136	
1137	
1138	
1139	

Table 2-8. Skill, Knowledge and Training Factors
(Continued)

	1140	Basic Electrical Circuits	
		1141	Series, Parallel, Series-Parallel DC Circuits
		1142	Wye, Delta, Bridge, DC Circuits
		1143	R-C, R-L, R-L-C Series, Parallel, Series-Parallel, A-C Circuits
		1144	Resonant Circuits, Impedance Matching Networks
		1145	
		1146	
		1147	
		1148	
		1149	
	1150	Basic Electronic Circuits	
		1151	Filter, R-C Coupling, Integrating, Differentiating, Clamping
		1152	L-C Coupling, Transformer Coupling, Tuned Coupling
		1153	Rectifier, Amplifier, Oscillator
		1154	Detector, Modulator
		1155	Voltage Divider, Multipliers
		1156	
		1157	
		1158	
		1159	
1200	DEVICES AND PARTS (Construction and Operating Principles)		
	1210	Electrical, Electronic Devices	
		1211	Resistors, Capacitors, Inductors, Transformers
		1212	Potentiometers, Variable Capacitors, Variable Inductors and Transformers
		1213	Electron Tubes (Diodes, Triode, Pentodes)
		1214	Semiconductor Diodes, Transistors
		1215	Crystals, Frequency Control
		1216	Klystrons, Magnetrons, Amplitrons, Hydrogen Thyratrons, T/R, AT/R Travelling Wave Tubes
		1217	Masers, Lasers
		1218	Batteries, Storage, Dry Cells
		1219	

Table 2-8. Skill, Knowledge and Training Factors
(Continued)

1210 Electromechanical Devices

1221	Motors-Drive (AC, DC), Generators (AC, DC)
1222	Motors-Synchronous, Torque
1223	Synchros-Receivers, Transmitters, Differentials, Resolvers, Control Transformers
1224	Relays, Solenoids, Stepping Switches
1225	Magnetic Clutches, Magnetic Brakes
1226	Meter Movements, D'Arsonval Electrodynamometer, AC-Thermocouplers, Rectifiers
1227	
1228	
1229	

1230 Mechanical Devices

1231	Gear Trains, Differentials
1232	Hydraulic Pistons, Pumps, Valves
1233	Pneumatic Pumps, Blowers, Compressors
1234	
1235	
1236	
1237	
1238	
1239	

1300 ELECTRONIC EQUIPMENT OPERATION

1310 Radar Equipment (General Operating Principles)

1311	Airborne Early Warning Radar
1312	Beacons
1313	Control Radar
1314	MTI Radar
1315	Search Radar
1316	Speed Indicating Radar
1317	Surface Radar
1318	Tracking Radar
1319	

1320 Communications Equipment (General Operations Principles)

1321	Radio Receivers and Transmitters (General)
1322	Single Sideband Equipment
1323	Teletype Terminal Equipment
1324	Digital Data Communications Equipment
1325	Distribution Patch System
1326	
1327	
1328	
1329	

Table 2-8. Skill, Knowledge and Training Factors
(Continued)

1330	Navigational Aid Equipment (General Operating Principles)	
	1331	LORAN
	1332	TACAN
	1333	ILS
	1334	Radio Direction Finder
	1335	
	1336	
	1337	
	1338	
	1339	
1340	Computer Equipment (General Operating Principles)	
	1341	Data Storage Devices
	1342	Digital Display Systems
	1343	Input-Output Equipment
	1344	Magnetic Tape Equipment
	1345	Analog-Digital, Digital-Analog Conversion Equipment
	1346	
	1347	
	1348	
	1349	
1350	Test Equipment and Instruments (General Purpose)	
	1351	Multimeter, VTVM, Megohmeter, Ammeter
	1352	Tube Tester, Transistor Checkers, Crystal Checker
	1353	Oscilloscope, AF Sig. Gen., Square Wave Gen.
	1354	Synchroscope, RF Sig. Gen., Pulse Gen., Echo Box
	1355	Frequency Meter, Frequency Counter, Wavemeter (Absorbtion)
	1356	C-L-R Bridge, Q Meter, Grid Dip Meter
	1357	
	1358	
	1359	
1360	Test Equipment and Instruments (Specialized)	
	1361	Range Mark Generator, R.M. Calibrator
	1362	Electronic Switch, Spectrum Analyzer
	1363	UHF Signal Generator, RF Power Meter
	1364	Slotted Line, Microwave Power Meter, Waveguide Adaptive
	1365	Field Strength Meter
	1366	
	1367	
	1368	
	1369	

Table 2-8. Skill, Knowledge and Training Factors
(Continued)

1370 Operators Controls and Adjustments — Purpose of
- 1371 Receiver Gain, Transmitter Tun., Antenna Tun.
- 1372 Radar Intensity, Focus, Receiver Tuning, Antenna Rotation, IFF Switch
- 1373
- 1374
- 1375
- 1376
- 1377
- 1378
- 1379

1380 Environmental Effects
- 1381 Electrical and Electronic Equipment Operation
- 1382
- 1383
- 1384
- 1385
- 1386
- 1387
- 1388
- 1389

1400 DIAGNOSIS AND TROUBLESHOOTING

1410 Fault Recognition
- 1411 Radar Equipment
- 1412 Communications Receiver
- 1413 Communications Transmitter
- 1414 Computers
- 1415 Sonar Equipment
- 1416
- 1417
- 1418
- 1419

1420 Localization
- 1421 Interpret Failure Indicators (Go-No-Go)
- 1422 Read and Interpret Meters, Dials
- 1423 Use Operating Controls and Indicators, Interpret Symptoms
- 1424 Interpret Cathode Ray Tube Presentation
- 1425
- 1426
- 1427
- 1428
- 1429

Table 2-8. Skill, Knowledge and Training Factors
(Continued)

	30	Troubleshooting Techniques	
		1431	Signal Tracing - Analog Circuits
		1432	Signal Tracing - Digital Circuits
		1433	Diagnostic Programs - Computer
		1434	
		1435	
		1436	
		1437	
		1438	
		1439	
1500	MEASUREMENT AND ANALYSIS		
	1510	Units of Measure	
		1511	Volt, Ampere, Ohm, Volt-Ampere, Watt, Cycles Per Second
		1512	Henry, Farad, Gauss, Amperaturn, Coolamb
		1513	Giga-Mega-Kilo-Milli-Micro-Pica, (Ref. 1514 1512)
		1514	Millisecond, Microsecond, Degree, Pulse Key/Sec.
		1515	Decibel, dbm, VU, etc.
		1516	
		1517	
		1518	
		1519	
	1520	Basic Measurement Techniques	
		1521	DC Volt, AC Volt, Resistance, Pwr, Current
		1522	Frequency (AF, IF, and RF)
		1523	Waveform (Pulse Rate, Pulse Width, Rise Time, Fall Time, Amplitude)
		1524	Inductance, Capacitance
		1525	Fluxdensity
		1526	
		1527	
		1528	
		1529	
	1530	Complex Measurement Techniques	
		1531	VSWR, Noise Fig., Sensitivity, Selectivity
		1532	Zerobeat, Null, Lissajous Patterns
		1533	Timing
		1534	RF Power Output (High Level)
		1535	RF Power Output (Very Low Level)
		1536	
		1537	
		1538	
		1539	

Table 2-8. Skill, Knowledge and Training Factors
(Continued)

1540	Measurement Principles		
		1541	Circuit Loading
		1542	Meter Sensitivity
		1543	
		1544	
		1545	
		1546	
		1547	
		1548	
		1549	
1550	Analysis and Evaluation of Tests		
		1551	Electronic, Electrical (Comparison against Std.)
		1552	Electromechanical
		1553	Mechanical and Hydraulic
		1554	Coolant System (Water, Oil, Air)
		1555	
		1556	
		1557	
		1558	
		1559	
1600	MARKING AND IDENTIFICATION		
1610	Nomenclature		
		1611	Equipment Breakdown Nomenclature System
		1612	Part Nomenclature Identification System
		1613	
		1614	
		1615	
		1616	
		1617	
		1618	
		1619	
1620	Marking		
		1621	Color Codes
		1622	Alphanumeric Codes
		1623	Symbols For Units of Measure
		1624	
		1625	
		1626	
		1627	
		1628	
		1629	

Table 2-8. Skill, Knowledge and Training Factors
(Continued)

1630	Identification	
	1631	Stock Numbering Systems (FSN, etc.)
	1632	Schematic Reference Designations
	1633	Units (Components) Assemblies, Subassemblies
	1634	Primary and Casualty Power Circuits
	1635	
	1636	
	1637	
	1638	
	1639	
1640	Symbols	
	1641	Electronic Schematic Diagram Symbols
	1642	Block Diagram Symbols
	1643	Wiring Diagram Symbols
	1644	Logic Diagram Symbols
	1645	Wire Communications Schematic Diagram Symbols
	1646	Mechanical and Hydraulic System Schematic Diagram Symbols
	1647	
	1648	
	1649	

Table 2-8. Skill, Knowledge and Training Factors
(Continued)

000 THEORY

2100 CIRCUITS (Basic)

2110 Amplifier Circuits (Electron Tube)

- 2111 Class A,B,C, AB; Cathode follower; Bias Supply
- 2112 RF and IF, Tuned and Untuned (Receiving Applications)
- 2113 Buffer, Driver, Power Amplifier (Transmitter Applications)
- 2114 Servo; DC
- 2115 Video, non-linear, Limiting Peaking Gated Coincidence
- 2116 Operational (Analog Computer Applications)
- 2117 Phase Inverters
- 2118
- 2119

2120 Oscillators and Generators (Electron Tube)

- 2121 Audio, RC, Wein Bridge
- 2122 RF-Fixed Tuned, Variable Frequency
- 2123 RF-Crystal Controlled
- 2124 Blocking, Sawtooth Generator, Multivibrator
- 2125 Phantestron
- 2126
- 2127
- 2128
- 2129

2130 Rectifiers, Regulators, (Electron Tube)

- 2131 Rectifiers-Half Wave, Full Wave, Bridge (Single Phase, 3 Phase)
- 2132 Voltage Regulators
- 2133 High Voltage Rectifiers
- 2134 Filters
- 2135
- 2136
- 2137
- 2138
- 2139

Table 2-8. Skill, Knowledge and Training Factors
(Continued)

2140	Detectors, Modulators, Demodulators		
	2141	Diode Detectors, Square-Low Detectors	
	2142	Discriminators, Phase Detectors, Pulse Demodulators, Coincidence	
	2143	Modulators - Grid, Plate, Screen	
	2144	Modulators - Balanced, FM, SSB, etc.	
	2145	Hetrodyne Converters	
	2146		
	2147		
	2148		
	2149		
2150	Solid State Circuits (Analog)		
	2151	Transistor Amplifier, Emitter Followers, etc., Bias Supplies	
	2152	Solid State Power Supplies, Regulators, etc.	
	2153	Magnetic Amplifiers	
	2154		
	2155		
	2156		
	2157		
	2158		
	2159		
2160	Solid State Circuits (Digital)		
	2161	Flip-Flops	
	2162	Gates - AND, OR, NAND, NOR, etc.	
	2163		
	2164		
	2165		
	2166		
	2167		
	2168		
	2169		
2200	CIRCUITS (Complex)		
2210	Receiving (Communications)		
	2211	RF Amplifiers - LF, HF, VHF	
	2212	IF Amplifiers, Multi-stage-Peak Tuned, Stagger Tuned	
	2213	Multiple Conversion, Single Sideband	
	2214	AGC, AFC, AVC	
	2215	RF Amplifiers-UHF, Microwave	
	2216	Parametric Amplifiers	
	2217	Receiver Autotune Circuits	
	2218		
	2219		

Table 2-8. Skill, Knowledge and Training Factors
(Continued)

2220	Transmitting (Communications)	
	2221	RF Power Amplifiers - LF, HF, VHF
	2222	RF Power Amplifiers - UHF, Microwave
	2223	Neutralizing Circuits
	2224	Oscillators-Tunable, Crystal Controlled
	2225	Modulators - High Level, Low Level
	2226	Frequency Shift Keyers, Multiplexers
	2227	Simple Sideband
	2228	
	2229	
2230	Radar Circuits (Basic)	
	2231	Modulators (AC & DC Resonant Charging)
	2232	Duplexers - Waveguide, Coaxial Line
	2233	Transmitter - Magnetron, Amplitron, Klystron
	2234	IF Preamplifier, IF Amplifiers, Video Amplifiers
	2235	Local Oscillators - Tuned Cavity, Klystron
	2236	Indicators - PPI, A, B, HRI, etc.
	2237	Sweep Generators, Trigger, Generators, Range Mark Gen.
	2238	Antennas, Servo Amplifiers, Amplidynes
	2239	
2240	Radar Circuits (Advanced)	
	2241	Stable Local Osc., Coherent Oscillator
	2242	Pulse Delay and Comparison Network
	2243	MTI Principles
	2244	ECM Principles, Pulse Distortion Techniques
	2245	Automatic Tracking, Antenna Stabilization
	2246	
	2247	
	2248	
	2249	
2250	Computer Circuits (Digital)	
	2251	Counters-Binary Decade
	2252	Logic Circuitry
	2253	Storage Registers, Accumulators, etc.
	2254	Input-Outlut, Interface, etc.
	2255	
	2256	
	2257	
	2258	
	2259	

Table 2-8. Skill, Knowledge and Training Factors
(Continued)

	2290	Miscellaneous Circuits	
		2291	Servomechanisms, Control Circuits
		2292	
		2293	
		2294	
		2295	
		2296	
		2297	
		2298	
		2299	
2300	COMPUTER THEORY		
	2310	Computer Language and Coding	
		2311	Boolean Algebra and Symbolic Logic
		2312	Number Systems and Conversion Methods
		2313	Generating Symbols, Pro.Formats, Word/Message Formats
		2314	
		2315	
		2316	
		2317	
		2318	
		2319	
	2320	Maintenance Programming Fundamentals	
		2321	Parity Bits
		2322	Diagnostic Programs
		2323	
		2324	
		2325	
		2326	
		2327	
		2328	
		2329	
2400	EQUIPMENT/SYSTEM OPERATION		
	2410	Radar Equipments/Systems	
		2411	Airborne Early Warning, Search, Surface
		2412	Control, Tracking, Space Indicating
		2413	Gunlaying, Missile Directing
		2414	Beacons
		2415	Identification and Recognition
		2416	
		2417	
		2418	
		2419	

Table 2-8. Skill, Knowledge and Training Factors
(Continued)

2420	Communications Equipment/Systems	
	2421	Receiving Equipment
	2422	Transmitting Equipment
	2423	Telephone/Teletype Terminal Equip. Facsimile
	2424	Digital Communications Systems
	2425	
	2426	
	2427	
	2428	
	2429	
2430	Sonar Equipment/Systems	
	2431	
	2432	
	2433	
	2434	
	2435	
	2436	
	2437	
	2438	
	2439	
2440	Electronic Countermeasures/Systems	
	2441	Operation of ECM, ECCM
	2442	Capabilities and Limitations of ECM, ECCM
	2443	
	2444	
	2445	
	2446	
	2447	
	2448	
	2449	
2450	Electronic Navigational Aids	
	2451	LORAN
	2452	TACAN
	2453	ILS
	2454	Radio Direction Finder
	2455	OMEGA
	2456	
	2457	
	2458	
	2459	

Table 2-8. Skill, Knowledge and Training Factors
(Continued)

	2490	Miscellaneous	
		2491	Radiac
		2492	
		2493	
		2494	
		2495	
		2496	
		2497	
		2498	
2500	ANTENNAS AND TRANSMISSION LINES		
	2510	Antennas	
		2511	Marconi, Hertz, Dipole
		2512	Yagi, Bed Spring, Collinear
		2513	Parabolic, Lens, Corner, Flat Reflector
		2514	
		2515	
		2516	
		2517	
		2518	
		2519	
	2520	Transmission Lines	
		2521	Open Wire Resonant and Non-Resonant
		2522	Coaxial Waveguide
		2523	Antenna Couplers, Patching Systems
		2524	
		2525	
		2526	
		2527	
		2528	
		2529	
	2530	Propagation	
		2531	Effect of Ground Wave, Sky Wave, Reflected Wave, Ionosphere Reflection
		2532	Antenna Polorization and Directional Characteristics
		2533	
		2534	
		2535	
		2536	
		2537	
		2538	
		2539	

Table 2-8. Skill, Knowledge and Training Factors
(Continued)

00 TECHNIQUES, METHODS AND PROCEDURES

3100 RESCUE AND FIRST AID

3110 Electric Shock

3111 Rescue - Contact with electric current
3112 Resuscitation
3113 Tagging Switches, Removing Fuses, Grounding Test Equipment
3114
3115
3116
3117
3118
3119

3120 Burns, Abrasions, Lacerations

3121 First Aid Treatment
3122
3123
3124
3125
3126
3127
3128
3129

3200 EQUIPMENT OPERATION

3210 Use of Operations Controls and Indicators

3211 Radar Equipment
3212 Communications Equipment
3213 Computer Equipment
3214 Sonar Equipment
3215
3216
3217
3218
3219

3220 System Operation

3221 Distribution Patching Sys.,Transmitters, Rec.,Ant.
3222
3223
3224
3225
3226
3227
3228
3229

Table 2-8. Skill, Knowledge and Training Factors
(Continued)

3300	DIAGNOSIS AND TROUBLESHOOTING		
	3310	Tests (Electrical Electronic)	
		3311	Short Circuit, Grounds, Continuity (Cabling)
		3312	Short Circuit, Grounds, Continuity (Elec. Circuitry)
		3313	
		3314	
		3315	
		3316	
		3317	
		3318	
		3319	
	3320	Localization and Isolation	
		3321	Electronic Equip. Casualties-to system components
		3322	Electronic Equip. Casualties-to subassembly or part
		3323	
		3324	
		3325	
		3326	
		3327	
		3328	
		3329	
	3330	Tests (Electromechanical)	
		3331	Servomechanisms, Synchro zero, Gain, Phase, Balance
		3332	Servo motors, Amplidynes
		3333	
		3334	
		3335	
		3336	
		3337	
		3338	
		3339	
	3340	Circuit Waveform Measurements	
		3341	Video Amplifiers, Squaring, Peaking, Clamping
		3342	Sweep Gen. (Hard Tube) Sweep Gen. (Traposoidal)
		3343	Blocking Oscillators, Multivibrators, Phantestrons
		3344	Counters, Dividers
		3345	
		3346	
		3347	
		3348	
		3349	

Table 2-8. Skill, Knowledge and Training Factors
(Continued)

	3350	Troubleshooting Techniques	
		3351	Signal Tracing Techniques (Analog Circuits)
		3352	Signal Tracing Techniques (Digital Circuits)
		3353	Fault Location Using Oscilloscopes
		3354	
		3355	
		3356	
		3357	
		3358	
		3359	
3400	REPAIR AND MAINTENANCE		
	3410	Preventive Maintenance	
		3411	Inspection, Cleaning, Lubrication
		3412	Operational Tests
		3413	Service of Commutators, Slip Ring, Brushes
		3414	Maintenance of Batteries
		3415	
		3416	
		3417	
		3418	
		3419	
	3420	Interchange of Defective Items	
		3421	Electron Tubes, Fuses, Lamps
		3422	Plug-in Modular Assembly
		3423	Wired-in Components (Electrical & Electronic)
		3424	Mechanical Parts (Gears, Cams, etc.)
		3425	Solid State Components
		3426	
		3427	
		3428	
		3429	
	3430	Repair Processes	
		3431	Soldering-Wired Connections, Splices
		3432	Soldering-Printed Wiring Boards, Heat-Sensitive Devices
		3433	
		3434	
		3435	
		3436	
		3437	
		3438	
		3439	

3440 Repair and Maintenance Procedures (Electronic)

3441 Prime Equipment Repair Procedures
3442 Test Equipment Repair Policies
3443 Field Changes
3444 Solid State Components, Miniaturized Circuits
3445 Test Equipment Repair
3446
3447
3448
3449

3450 Repair and Maintenance Procedures, Electro-mechanical, Mechanical

3451 Servomechanisms
3452 Coolant Systems (Water, Oil, Air)
3453
3454
3455
3456
3457
3458
3459

3500 ADJUSTMENT, ALIGNMENT, CALIBRATION

3510 Adjustment — Simple

3511 External Adjustment-Operators Controls
3512 Maintenance Adjustment(No External Test Equip.)
3513 Maintenance Adjustment(External Test Equip.Req'd)
3514
3515
3516
3517
3518
3519

3520 Alignment (Electronic)

3521 Tuned Amplifiers, Oscillators(Gen. Electronic Alignment)
3522 Autotuned Circuitry, Multiple Conversion Receivers
3523 Servo Drive Systems
3524 Multivibrators, Blocking Oscillators(Synchronizing)
3525
3526
3527
3528
3529

Table 2-8. Skill, Knowledge and Training Factors
(Continued)

3530	Alignment and Adjustment (Mechanical)	
	3531	Cams, Gears, etc.
	3532	Hydraulic Servo Systems
	3533	Coolant Systems (Water, Oil, Air)
	3534	
	3535	
	3536	
	3537	
	3538	
	3539	
3540	Calibration	
	3541	Electronic Prime Equipment using Precision Test Equip.
	3542	Electronic Test Equipment using Secondary Standards
	3543	
	3544	
	3545	
	3546	
	3547	
	3548	
	3549	

Table 2-8. Skill, Knowledge and Training Factors
(Continued)

4000	USE AND APPLICATION			
	4100	SAFETY DEVICES		
		4110	Electrical Safety	
			4111	Shorting Bars, Rubber Mats
			4112	
			4113	
			4114	
			4115	
			4116	
			4117	
			4118	
			4119	
		4120	Personal Protection	
			4121	Safety Glasses, Shoes, Clothing
			4122	Breathing Devices
			4123	Radiation Badges
			4124	
			4125	
			4126	
			4127	
			4128	
			4129	
		4130	Working Aloft	
			4131	Safety Belts, Life Lines
			4132	
			4133	
			4134	
			4135	
			4136	
			4137	
			4138	
			4139	
	4200	TOOLS		
		4210	Hand Tools, Manual	
			4211	Screwdriver, Wrenches, Pliers, Cutters, etc.
			4212	Soldering Irons and Equipment
			4213	Welding Torches - Gas
			4214	Torque Wrenches, Precision Tools and Gages
			4215	
			4216	
			4217	
			4218	
			4219	

Table 2-8. Skill, Knowledge and Training Factors
(Continued)

4220	Power Tools, Portable		
		4221	Drills, Power Wrenches, etc.
		4222	Welding Torches - Electric
		4223	
		4224	
		4225	
		4226	
		4227	
		4228	
		4229	
4230	Power Tools, Fixed		
		4231	Drill Press, Grinder
		4232	Precision Machine Tools-Lathe, Shaper, Surface Grinder
		4233	
		4234	
		4235	
		4236	
		4237	
		4238	
		4239	
4300	TEST EQUIPMENT AND INSTRUMENTS		
4310	Electronics Test Equipment (General Purpose)		
		4311	Multimeter, VTVM, Megohmmeter, Ammeter
		4312	Tube Tester, Transistor Checker, Crystal Checker
		4313	Oscilloscope, AF Signal Gen., Square Wave Gen.
		4314	Synchroscope, RF Signal Gen., Pulse Generator
		4315	Freq. Meter, Freq. Counter, Absorbtion Wavemeter
		4316	Capacitance-Inductance-Resistance Bridge, Q. Meter, Grid Dip Meter
		4317	
		4318	
		4319	
4320	Electronic Test Equipment (Specialized)		
		4321	Range Mark Generator, RM Calibrator, Echo Box
		4322	Electronic Switch-Spectrum Analyzer
		4323	UHF Signal Gen., VHF Signal Gen., RF Power Meter
		4324	Slotted Line, Microwave Power Meter, Microwave Waveguide Adapters
		4325	Field Strength Meter
		4326	
		4327	
		4328	
		4329	

Table 2-8. Skill, Knowledge and Training Factors (Continued)

4400	DOCUMENTATION		
	4410	Diagrams and Charts	
		4411	Block Diagrams
		4412	Wiring Diagrams
		4413	Schematic Diagrams
		4414	Logic Diagrams
		4415	Symptom Chart
		4416	Installation Blueprints
		4417	
		4418	
		4419	
	4420	Publications	
		4421	Operators Manuals
		4422	Maintenance Instructions
		4423	Parts List
		4424	Corrections to Maintenance Publications
		4425	Step-by-Step Procedures
		4426	Check Sheets
		4427	
		4428	
		4429	

4. OUTPUT DATA FORMATS. The data formats presented in this section are suggested formats only and may be changed by the programmer to suit his convenience or preferences. The forms for each of these procedures will be considered in turn.

4.1 Procedure C and Detail Procedure. The format used for the Detail Procedure and the Procedure C are identical. The suggested format is shown in Figure 2-4. The entries are identified by letter for purposes of discussion and are discussed below under correspondingly lettered subparagraphs. The headings will be printed as indicated in Figure 2-4.

a. Date and Analyst. A six-digit entry for the month, day and year is printed under "Date". The analyst's name will be printed out under "Analyst".

b. Nomenclature. The equipment nomenclature, such as AN/XYZ-1 is printed under this heading.

c. Analysis Data. One line entry per replacement item as follows:

Item Ident. The alphanumeric identification of the line item (e.g., 1A1A1)

Repl. Level. A one-digit code indicating the functional level of replacement.

Fail. Rate. The failure rate of the line item.

TMB By Task Type. The time required in hours of corrective maintenance per 1000 hours of equipment operation for each task type and complexity.

Disposition Of Item. One word indicating the disposition of the replaced item, such as Throwaway, Bench, Tender, etc.

d. Totals. This consists of a single line entry as follows:

Equipment Fail. Rate. The failure rate of the equipment which is equal to the sum of the line item failure rates.

TMB Totals By Task Types. The total time required in hours of corrective maintenance per 1000 hours of equipment operation for each task type and complexity. This is equal to the sum of line item entries for TMB by Task Type.

ANALYST

a) DATE

b) NOMENCLATURE

c) ITEM IDENT.

TMB BY TASK TYPE

REPL. LEVEL	FAIL. RATE	L1	L2	L3	IS1	IS2	A1	A2	IN1	IN2	AL1	AL2	C1	C2	DISP. OF ITEM

d)

TMB TOTALS BY TASK TYPE

EQUIP. FAIL. RATE	L1	L2	L3	IS1	IS2	A1	A2	IN1	IN2	AL1	AL2	C1	C2

TMB BY SKILL LEVEL

e)

HOURS/1000 HOURS SKILL LEVEL A	HOURS/1000 HOURS SKILL LEVEL B	HOURS/1000 HOURS SKILL LEVEL C

f) TEST EQUIPMENT USED

g) PERSONNEL REQUIREMENT BY TASK TYPE

L1	IN1
L2	IN2
L3	AL1
IS1	AL2
IS2	C1
A1	C2
A2	

h) EQUIPMENT TYPE

i)

ITEM IDENT.	TASK TYPE	SPECIAL TRAINING REQUIREMENTS	
		TMB	TRAINING REQUIREMENTS

Figure 2-4. Output Format — Procedure C and Detail Procedure

e. TMB By Skill Level. Task Maintenance Burden by skill level A, B, and C in hours per 1000 hours of equipment operation.

f. Test Equipment Used. (Not Used For Procedure C). One line entry listing each piece of test equipment used.

g. Personnel Requirement By Task Type. Personnel required for each task type listed by rate and rating, for example, L1 - ETNSN, etc.

h. Equipment Type. Type of equipment such as Radar, Sonar, etc.

i. Special Training Requirements. (Not Used For Procedure C). One line entry per each line item that requires special training as follows:

Item Identification. The alphanumeric identification of the line item (e.g., 1A1A1).

Task Type. The particular task type such as L3, IS2 which requires special training.

TMB. The time required in hours for the task types listed under Task Type.

Training Requirements. The training requirements for the line item written out.

4.2 Procedure B. The suggested format for Procedure B is shown in Figure 2-5. The headings are printed out as shown on the forms and the data entries are as follows:

a. Date and Analyst.

Date. Six digits for month, day and year.

Analyst. Analyst's name printed out.

b. Nomenclature. Equipment nomenclature such as AN/XYZ-1.

c. Analysis Data. One line entry per each equipment major subdivision as follows:

a)	DATE			ANALYST
b)	NOMENCLATURE			
c)	MAJOR SUBDIVISIONS	HOURS/1000 HOURS SKILL LEVEL A	HOURS/1000 HOURS SKILL LEVEL B	HOURS/1000 HOURS SKILL LEVEL C
d)		TOTAL HOURS/1000 HOURS SKILL LEVEL A	TOTAL HOURS/1000 HOURS SKILL LEVEL B	TOTAL HOURS/1000 HOURS SKILL LEVEL C

e) PERSONNEL REQUIREMENT —— SKILL LEVEL A REQUIRES

f) PERSONNEL REQUIREMENT —— SKILL LEVEL B REQUIRES

g) PERSONNEL REQUIREMENT —— SKILL LEVEL C REQUIRES

Figure 2-5. Output Format — Procedure B

Major Subdivision. The identification of the major subdivision by number which has previously been assigned.

Hours/1000 Hours Skill Level A. Hours of corrective maintenance required for 1000 hours of equipment operation that can be performed by a technician of Skill Level A.

Hours/1000 Hours Skill Level B. Same as above, except indicating that a technician of Skill Level B is required.

Hours/1000 Hours Skill Level C. Same as above, except indicating that a technician of Skill Level C is required.

d. Totals. A single line entry listing totals for each of the three skill levels for the entire equipment.

e., f., and g. Personnel Requirement. Skill Level Requires — rate and rating of the technician who can be expected to have the capabilities for the appropriate Skill Levels A, B, or C.

SECTION 3

DEVELOPMENT OF CODED MATHEMATICAL EXPRESSIONS

SECTION 3

DEVELOPMENT OF CODED MATHEMATICAL EXPRESSIONS

1. APPROACH. The coded mathematical expressions that were used as a basis for the system flow charts were developed by first generating matrices of the essential failure rate and task time input data. These matrices are made up of uniquely identifiable elements that are readily adaptable to ADP application.

The development of the matrix formats is described in paragraphs 2 and 3 of this section. The input data requirements are essentially identical for the Deail Procedure and Procedure C. Therefore, the matrix formats for these two procedures are developed concurrently in paragraph 2. The matrix formats for Procedure B are developed in paragraph 3. In order to ensure maximum utility, the actual matrices used in subsequent development tasks are consolidated in paragraph 4. This section is concluded with a discussion of the coded mathematical expressions.

2. MATRIX FORMATS FOR DETAIL PROCEDURE AND PROCEDURE C. All data required for the application of the Detail Procedure was organized into matrices in formats that are conducive to efficient ADP Programming. The development of the matrix formats is discussed in the following paragraph. These matrices are also applicable to Procedure C without revision to the format or to the data elements of the matrices. Therefore, the development described below applies to either procedure.

2.1 High Failure Rate Item Failure Rates. The application of the Detail Procedure includes the calculation of replaceable item failure rates. This task includes using a table to determine the average failure rate of given categories of high failure rate items. The essential data from this table can be presented as a 13 x 1 matrix of average failure rates. The part categories do not need to be listed providing the matrix elements are listed in the proper sequence. The matrix elements, HFR_i, are defined in Table 3-1.

Table 3-1. Failure Rate Matrix Element Definitions

Matrix Element	Definition
HFR_1	Failure rate of receiving tubes
HFR_2	Failure rate of transmitting and special purpose
HFR_3	Failure rate of cathode ray tubes
HFR_4	Failure rate of magnetrons
HFR_5	Failure rate of transistors
HFR_6	Failure rate of semiconductor diodes
HFR_7	Failure rate of relays
HFR_8	Failure rate of vibrators or choppers
HFR_{10}	Failure rate of resolvers
HFR_{11}	Failure rate of blowers
HFR_{12}	Failure rate of other motors
HFR_{13}	Failure rate of vacuum capacitors

2.2 Average Task Times. In the manual application of the Detail Procedure, average task times are obtained from a table that presents the ATT data in a form that is convenient for manual application, but which is not amenable to ADP application. Therefore, this table was divided into six 7 x 5 matrices, one for each of the six task types. These six matrices can be stored together in computer memory in the form of a three dimensional 7 x 5 x 6 matrix of average task time values, each element of which is uniquely identified by replaceable item, functional level of task performance, and task type.

The development of this matrix can be illustrated by considering the localization portion of the average Task Time Table. (Table I-2 of Report No. ND 65-36.) The format of this table was first re-arranged as in Table 3-2. This table is now in the form of a matrix, the elements of which can be identified by stating the functional levels of task performance and replaceable item. Using the functional level codes as established in Table 2-2 of Section 2, Table 3-2 can be modified as shown in Table 3-3.

Elements of this revised matrix can be identified as $\left[ATT_{lk}\right]$, where "l" is the number of the row corresponding to the functional level of task performance, and "k" is the number of the column corresponding to the functional level of the replaceable item.

Six matrices, one of each task type, were developed using this format. This set of matrices can be represented by the symbol $\left[ATT_{lk}\right]_j$, where "l" and "k" identify the row and column of a matrix containing average task time elements for Task Type j. Task types are coded as follows:

TASK	CODE
Localization	j = 1
Isolation	j = 2
Access	j = 3
Interchange	j = 4
Alignment	j = 5
Checkout	j = 6

The appropriate value of "j" can be calculated using the Task Type data recorded on the Input Data Sheet. Thus, the input data concerning functional level of task performance, replaceable item functional level, and task type can be used to uniquely define the particular matrix and element that contains a desired value of average task time. Also, the six matrices can be combined to form a three dimensional matrix such that $\left[ATT_{lk}\right]_j = \left[ATT_{lkj}\right]$.

2.3 Personnel Requirements. Comparison of the requirements of the Manual of Qualifications for Advancement in Rating, NAVPERS 18068A, with the skill and knowledge requirements outlined in Appendix 4-1 of Report No. ND 65-31 permitted relating rating and rate to equipment category and task type complexity. These relationships are indicated in Table 3-4. This table was converted into a matrix for ADP application by developing standardized statements describing each of the different types of personnel requirements, and assigning a

TABLE 3-2. LOCALIZATION AVERAGE TASK TIMES

Functional Level of Task Performance	PART	SUBASSEMBLY	ASSEMBLY	UNIT
Part	0.02			
Stage	0.04			
Subassembly	0.06	0.02		
Assembly	0.07	0.03	0.02	
Unit	0.09	0.04	0.03	0.02
Group	0.11	0.05	0.04	0.03
Equipment	0.12	0.05	0.05	0.04

TABLE 3-3. LOCALIZATION MATRIX

Functional Level of Task Performance (l)	Replaceable Item Functional Level (k) 1	2	3	4	5
1	0.02	0	0	0	0
2	0.04	0	0	0	0
3	0.06	0	0.02	0	0
4	0.07	0	0.03	0.02	0
5	0.09	0	0.04	0.03	0.02
6	0.11	0	0.05	0.04	0.03
7	0.12	0	0.05	0.05	0.04

NOTE: Column 2 or the "Stage" column has all the elements equal to zero. This column is included only to maintain proper coding sequence.

TABLE 3-4. QUALIFICATIONS OF MAINTENANCE PERSONNEL BY TASK TYPE[a]

Equipment Category / Task Type	L1	L2	L3[b]	IS1	IS2[b]	A1	A2[b]	IN1	IN2	AL1	AL2[b]	C1	C2[b]
RADAR	ETRSN or RDSN with OJT	ETRSN or RD3	ETR3 or RD1	ETR3	ETR3	ETRSN	ETR3	ETRSN with OJT	ETRSN	ETR3	ETR2	ETRSN	ETR3
COMMUNICATIONS	ETNSN or RMSN with OJT	ETNSN or RM3	ETN3 or RM2	ETN3	ETN3	ETNSN or RM3	ETN3 or RM2	ETNSN or RM3 with OJT	ETNSN or RM2	ETN3	ETN2	ETNSN	ETN3
SONAR	STGSN or STSSN with OJT	STGSN or STSSN	STG3 or STS3	STG3 or STS3	STG2 or STS2	STGSN or STSSN	STG3 or STS3	STGSN or STSSN with OJT	STG3 or STS3	STG2 or STS2	ST1	STGSN or STSSN	STG3 or STS3
FIRE CONTROL	FTGSN or FTMSN with OJT	FTGSN or FTMSN	FTG3 or FTM3	FTG2 or FTM2	FTG1 or FTM1	FTG3 or FTM3	FTG2 or FTM2	FTG3 or FTM3 with OJT	FTG2 or FTM2	FTG2 or FTM2	FTG1 or FTM1	FTG3 or FTM3	FTG1 or FTM1
DATA SYSTEMS	DSSN with OJT	DSSN	DS3	DS3	DS2	DSSN	DS3	DSSN with OJT	DS3	DS3	DS2	DS3	DS2

a. The rates shown are those which the personnel may actually have but they must have the minimum qualifications for advancement to the next higher rate in order to perform the respective task types.

b. By definition, task types L3, IS2, A2, AL2, and C2 usually require in addition to general electronic equipment maintenance training, special training on maintenance procedures applicable to the subject equipment.

"Statement Number" to each statement. For example, Statement Number 16 is "ETRSN or RD3 with ON-THE-JOB TRAINING." A table of such statements was developed.[1]

A matrix of statement numbers, $\left[S_{ij} \right]$ indexed by equipment category and task type, was developed to provide a coded relationships between these factors and the personnel requirements.

3. MATRIX FORMATS FOR PROCEDURE B. Procedure B requires a different set of matrices than are required for the application of the Detail Procedure and Procedure C. This procedure uses Replacement Item, Localization Level, and other input data to establish MTTR and skill level values. The formats for matrices from which these factors can be obtained are developed below:

3.1 MTTR Values. In the application of Procedure B, each combination of replacement item functional level, localization functional level, and isolation functional level uniquely describes a maintenance plan to which an MTTR value is associated. The various combinations are identified in the Procedural Instructions for Procedure B (Appendix 2-1 of Report No. ND 65-31, Volume II). The original MTTR value table is reproduced in a modified form in Table 3-5 where appropriate code numbers have been associated with the replacement items, localization levels and isolation levels. These codes are as established in Table 2-2 of Section 2. The Maintenance Profile Index numbers are included for subsequent application to skill level matrices.

The MTTR values were arranged into four 7 x 7 matrices that are suitable for computer application. One matrix was prepared to present the MTTR values for each different level of replacement item. These matrices can be combined in computer storage in the form of a three dimensional 7 x 7 x 4 matrix, each element of which is uniquely identifiable.

The development of this matrix can be illustrated by considering the "part" replacement item portion of Table 3-5. The format of this portion of the table was first re-arranged as in Table 3-6. This table is now in the form of a matrix, the elements of which can be identified by stating the functional levels of localization and isolation. This matrix can be revised by using the functional level code numbers to identify the rows and columns. Thus, elements of this matrix can be identified as $MTTR_{lk}$, where "l" is the number of the row corresponding to the localization level and "k" is the number of the column corresponding to the isolation level.

Four matrices, one for each level of replacement item, were developed in this format. This set of matrices can be represented by the symbol $\left[MTTR_{lk} \right]_j$, where "l" and "k" are as defined above, and "j" is functional level code for the replacement item. Thus, input data concerning the replacement item, localization level, and isolation level can be used to uniquely define the particular matrix and element that contains a desired value of MTTR. Also, the four matrices can be combined to form a three dimensional matrix such that $\left[MTTR_{lk} \right]_j = \left[MTTR_{lkj} \right]$.

[1] A complete list of statements appear in Volume II of this report.

TABLE 3-5. MTTR VALUES AND MAINTENANCE PROFILE INDICES

REPLACEMENT UNIT	LOCALIZATION LEVEL	ISOLATION LEVEL	MAINTENANCE PROFILE INDEX	MTTR (HOURS)
(5) Unit	(7) Equipment	(6) Group	1	.5
		(5) Unit	1	.5
	(6) Group	(5) Unit	1	.5
	(5) Unit	(0) N/A	2	.2
(4) Assembly	(7) Equipment	(6) Group	3	.9
		(5) Unit	4	.8
		(4) Assembly	4	.8
	(6) Group	(5) Unit	1	.8
		(4) Assembly	1	.8
	(5) Unit	(4) Assembly	1	.7
	(4) Assembly	(0) N/A	5	.4
(3) Subassembly	(7) Equipment	(6) Group	6	1.1
		(5) Unit	7	1.0
		(4) Assembly	8	.9
		(3) Subassembly	8	.9
	(6) Group	(5) Unit	7	1.0
		(4) Assembly	8	.9
		(3) Subassembly	8	.9
	(5) Unit	(4) Assembly	9	.8
		(3) Subassembly	9	.8
	(4) Assembly	(3) Subassembly	10	.8
	(3) Subassembly	(0) N/A	11	.5
(1) Part	(7) Equipment	(6) Group	12	2.4
		(5) Unit	13	2.2
		(4) Assembly	14	2.2
		(3) Subassembly	15	2.0
		(2) Stage	16	1.8
		(1) Part	17	1.6
	(6) Group	(5) Unit	13	2.2
		(4) Assembly	14	2.2
		(3) Subassembly	15	2.0
		(2) Stage	16	1.8
		(1) Part	17	1.6
	(5) Unit	(4) Assembly	14	2.2
		(3) Subassembly	15	2.0
		(2) Stage	16	1.8
		(1) Part	17	1.6
	(4) Assembly	(3) Subassembly	18	2.0
		(2) Stage	19	1.8
		(1) Part	20	1.6
	(3) Subassembly	(2) Stage	19	1.8
		(1) Part	20	1.6
	(2) Stage	(1) Part	21	1.5
	(1) Part	(0) N/A	22	1.0

TABLE 3-6. MTTR VALUES FOR REPLACEABLE PARTS

Localization Level \ Isolation Level	None (0)	Part (1)	Stage (2)	Subass'y. (3)	Ass'y. (4)	Unit (5)	Group (6)
Part (1)	1.0						
Stage (2)		1.5					
Subass'y. (3)		1.6	1.8				
Ass'y. (4)		1.6	1.8	2.0			
Unit (5)		1.6	1.8	2.0	2.2		
Group (6)		1.6	1.8	2.0	2.2	2.2	
Equip. (7)		1.6	1.8	2.0	2.2	2.2	2.4

3.2 Skill Level Data. The percentages of the MTTR that require the different skill levels is determined based on six descriptive characteristics of the equipment design. The first three, replacement item, localization level, and isolation level are used to define 44 maintenance plans which can be consolidated into 22 unique "maintenance profile indices." These indices are combined with information concerning type of failure indication, advancement in the state-of-the-art, and non-electronic maintenance to define the point of entry into the Equipment Maintenance Profile Table (Appendix 2-2 of Report No. ND 65-31, Volume II) to obtain the appropriate skill level percentages. Revision of the tables for ADP application requires the development of two sets of matrices, one to establish the maintenance profile index, and a second to extract the appropriate skill level percentages. Development of formats for these two sets of matrices is described below.

a. Maintenance Profile Index. The maintenance profile indices are listed in Table 3-5 together with the MTTR values. Each combination of replacement items, localization level, and isolation level is associated with a particular maintenance profile index as well as an MTTR value. Therefore, a set of matrices for determining the maintenance profile index was developed in the same manner as was used in developing the MTTR matrices. A typical matrix is shown in Table 3-7.

Four matrices, one for each level of replacement item, were developed in this format. This set of matrices can be represented by the symbol $\left[MP_{lk}\right]_j$, where "l" and "k" are the row and column numbers, respectively, and "j" is the matrix number. Thus, input data concerning the replacement item, localization level, and isolation level can be used to uniquely define the particular matrix and element that contains the desired maintenance profile index. Also, the four matrices can be combined to form a three dimensional matrix such that $\left[MP_{lk}\right]_j = \left[MP_{lkj}\right]$.

b. Skill Level Percentages. The skill level percentages, as determined from Appendix 2-2 of Report No. ND 65-31, Volume II, are based on:

- Maintenance Profile Index
- Type of failure indication
- State-of-the-art advances
- Non-electronic maintenance requirements

The first factor is established using the maintenance profile index matrix. The other three factors were reduced to two by developing a formula for calculating a code indicating the particular one of the four combinations of failure indication and non-electronic maintenance requirements. Thus, it was possible to include a sub-routine in the computer program for calculating one portion of the memory address using input data factors. This formula is developed as follows:

TABLE 3-7. MAINTENANCE PROFILE INDICES FOR REPLACEABLE PARTS

Localization Level \ Isolation Level	None (0)	Part (1)	Stage (2)	Subass'y. (3)	Ass'y. (4)	Unit (5)	Group (6)
Part (1)	22						
Stage (2)		21					
Subass'y. (3)		20	19				
Ass'y. (4)		20	19	18			
Unit (5)		17	16	15	14		
Group (6)		17	16	15	14	13	
Equip. (7)		17	16	15	14	13	12

The non-electronic maintenance data are coded in Table 2-7 as follows:

Code (NEM)	Non-Electronic Maintenance
1	No
2	Yes

The failure indication data are coded in Table 2-5 as follows:

Code (FI)	Type
1	Go-No-Go
2	Analog

The four possible combinations of these codes can be calculated using the expression:

$$P = NEM + 2(FI-1)$$

Where p is a number that uniquely defines a combination of these two characteristics.

A two dimensional 22 x 4 matrix could now be developed having the form $\left[MAPRO_{mp} \right]$, where m indicates the row in accordance with the maintenance profile index, and p indicates the column as determined using the expression developed above.

Consideration of the presence or absence of advance in the state-of-the-art will require two matrices in the form $\left[MAPRO_{mp} \right]_n$, where n = 1, if there is no advance in the state-of-the-art, and n = 2 if there is an advance. The two matrices thus generated are presented in paragraph 4. These can be combined in computer memory to form a three dimensional matrix such that $\left[MAPRO_{mp} \right]_n = \left[MAPRO_{mpn} \right]$.

3.3 Maintenance Personnel Data. In the application of Procedure B, the maintenance personnel requirements are determined based on the skill level requirements and the equipment category. The standard personnel requirements statements that were developed for the Detail Procedure (see paragraph 2.3) are applicable to Procedure B. The personnel requirements are related to the appropriate equipment categories and skill levels in Table 3-8.

TABLE 3-8. PERSONNEL REQUIREMENTS FOR PROCEDURE B

SKILL LEVEL	EQUIPMENT CATEGORY				
	Radar	Communication	Sonar	Data Systems	Fire Control
A[1]	ETRSN	ETNSN	STSN	DSSN	FTGSN
B[2]	ETRSN	ETNSN	STSN	DSSN	FTGSN
C[2]	ETR3	ETN3	ST3	DS3	FTG3

[1]Skill Level A tasks can be performed by a SN provided he meets the requirements for an identified striker in the respective rating, and receives appropriate on-the-job training on the equipment.

[2]Must have minimum qualifications for advancement to the next higher rate.

This data will be stored in computer memory in the form of standard statements associated with statement numbers as for the Detail Procedure.

4. DATA MATRICES. The matrices that were developed according to the formats described in paragraphs 2 and 3 are presented here. These matrices are identified by name and symbol. The symbols used correspond to the matrix symbols used elsewhere in this report. Subscripts to the matrix element symbols indicate the row number and column number in that order.

For example, $[A_{ij}]$ indicates a matrix of elements with elements (A_{ij}) located at the intersection of row i and column j. In those cases where a complete set of data are presented in more than one matrix, the matrices are indicated in the format $[A_{ij}]_k$, where i and j are as above and k is the index number of one of the matrices in the set.

MATRIX 1. High Failure Rate Item Failure Rates

Symbol: $\left[HFR_i \right]$

i = Part Category Code

i	HFR
1	14.10
2	38.92
3	21.63
4	487.01
5	3.26
6	1.16
7	2.86
8	32.18
9	1.80
10	25.47
11	2.85
12	5.84
13	3.08

MATRIX 2.1. Average Task Time, Localization

Symbol: $\left[ATT_{lk}\right]_l$

l = Functional Level of Task Performance
k = Replacement Item Functional Level

l \ k	1	2	3	4	5
1	0.02	0	0	0	0
2	0.04	0	0	0	0
3	0.06	0	0.02	0	0
4	0.07	0	0.03	0.02	0
5	0.09	0	0.04	0.03	0.02
6	0.11	0	0.05	0.04	0.03
7	0.12	0	0.05	0.05	0.04

MATRIX 2.2. Average Task Time, Isolation

Symbol: $\left[ATT_{lk}\right]_2$

l = Functional Level of Task Performance
k = Replacement Item Functional Level

l \ k	1	2	3	4	5
1	0.77	0	0	0	0
2	1.18	0	0	0	0
3	1.41	0	0.27	0	0
4	1.57	0	0.32	0.27	0
5	1.70	0	0.39	0.32	0.27
6	1.82	0	0.51	0.39	0.32
7	1.92	0	0.64	0.51	0.39

MATRIX 2.3. Average Task Time, Access

Symbol: $\left[ATT_{lk}\right]_3$

l = Functional Level of Task Performance
k = Replacement Item Functional Level

l \ k	1	2	3	4	5
1	2.62	0	0	0	0
2	0.89	0	0	0	0
3	0.43	0	0.43	0	0
4	0.31	0	0.31	0.31	0
5	0.23	0	0.23	0.23	0.23
6	0.16	0	0.16	0.16	0.16
7	0.11	0	0.11	0.11	0.11

MATRIX 2.4. Average Task Time, Interchange

Symbol: $\left[ATT_{lk}\right]_4$

l = Functional Level of Task Performance
k = Replacement Item Functional Level

l \ k	1	2	3	4	5
1	0.20	0	0	0	0
2	0.20	0	0	0	0
3	0.20	0	0.10	0	0
4	0.20	0	0.10	0.10	0
5	0.20	0	0.10	0.10	0.10
6	0.20	0	0.10	0.10	0.10
7	0.20	0	0.10	0.10	0.10

MATRIX 2.5. Average Task Time, Alignment

Symbol: $\left[ATT_{lk}\right]_5$

l = Functional Level of Task Performance
k = Replacement Item Functional Level

l \ k	1	2	3	4	5
1	0.17	0	0	0	0
2	0.08	0	0	0	0
3	0.05	0	0.05	0	0
4	0.03	0	0.03	0.03	0
5	0.02	0	0.02	0.02	0.02
6	0.02	0	0.02	0.02	0.02
7	0.01	0	0.01	0.01	0.01

MATRIX 2.6. Average Task Time, Checkout

Symbol: $\left[ATT_{lk}\right]_6$

l = Functional Level of Task Performance
k = Replacement Item Functional Level

l \ k	1	2	3	4	5
1	0.18	0	0	0	0
2	0.17	0	0	0	0
3	0.16	0	0.16	0	0
4	0.15	0	0.15	0.15	0
5	0.14	0	0.14	0.14	0.14
6	0.12	0	0.12	0.12	0.12
7	0.11	0	0.11	0.11	0.11

MATRIX 3.1. Mean Time To Repair, Replaceable Parts

Symbol: $\left[MTTR_{lk} \right]$

l = Localization Level
k = Isolation Level

l \ k	0	1	2	3	4	5	6
1	1.0	0	0	0	0	0	0
2	0	1.5	0	0	0	0	0
3	0	1.6	1.8	0	0	0	0
4	0	1.6	1.8	2.0	0	0	0
5	0	1.6	1.8	2.0	2.2	0	0
6	0	1.6	1.8	2.0	2.2	2.2	0
7	0	1.6	1.8	2.0	2.2	2.2	2.4

MATRIX 3.3. Mean Time To Repair, Replaceable Subassemblies

Symbol: $\left[MTTR_{lk}\right]_3$

l = Localization Level
k = Isolation Level

l \ k	0	1	2	3	4	5	6
1	0	0	0	0	0	0	0
2	0	0	0	0	0	0	0
3	0.5	0	0	0	0	0	0
4	0	0	0	0.8	0	0	0
5	0	0	0	0.8	0.8	0	0
6	0	0	0	0.9	0.9	1.0	0
7	0	0	0	0.9	0.9	1.0	1.1

MATRIX 3.4. Mean Time To Repair, Replaceable Assemblies

Symbol: $\left[MTTR_{lk}\right]_4$

l = Localization Level
k = Isolation Level

l \ k	0	1	2	3	4	5	6
1	0	0	0	0	0	0	0
2	0	0	0	0	0	0	0
3	0	0	0	0	0	0	0
4	0.4	0	0	0	0	0	0
5	0	0	0	0	0.7	0	0
6	0	0	0	0	0.8	0.8	0
7	0	0	0	0	0.8	0.8	0.9

MATRIX 3.5. Mean Time To Repair, Replaceable Units

Symbol: $\left[MTTR_{lk}\right]_5$

l = Localization Level
k = Isolation Level

l \ k	0	1	2	3	4	5	6
1	0	0	0	0	0	0	0
2	0	0	0	0	0	0	0
3	0	0	0	0	0	0	0
4	0	0	0	0	0	0	0
5	0.2	0	0	0	0	0	0
6	0	0	0	0	0	0.5	0
7	0	0	0	0	0	0.5	0.5

MATRIX 4.1. Maintenance Profile Index, Replaceable Parts

Symbol: $\left[MP_{lk}\right]_1$

l = Localization Level
k = Isolation Level

l \ k	0	1	2	3	4	5	6
1	22	0	0	0	0	0	0
2	0	21	0	0	0	0	0
3	0	20	19	0	0	0	0
4	0	20	19	18	0	0	0
5	0	17	16	15	14	0	0
6	0	17	16	15	14	13	0
7	0	17	16	15	14	13	12

MATRIX 4.3. Maintenance Profile Index, Replaceable Subassemblies

Symbol: $\left[MP_{lk}\right]_3$

l = Localization Level
k = Isolation Level

l \ k	0	1	2	3	4	5	6
1	0	0	0	0	0	0	0
2	0	0	0	0	0	0	0
3	11	0	0	0	0	0	0
4	0	0	0	10	0	0	0
5	0	0	0	9	9	0	0
6	0	0	0	8	8	7	0
7	0	0	0	8	8	7	6

MATRIX 4.4. Maintenance Profile Index, Replaceable Assemblies

Symbol: $\left[MP_{lk}\right]_4$

l = Localization Level
k = Isolation Level

l \ k	0	1	2	3	4	5	6
1	0	0	0	0	0	0	0
2	0	0	0	0	0	0	0
3	0	0	0	0	0	0	0
4	5	0	0	0	0	0	0
5	0	0	0	0	1	0	0
6	0	0	0	0	1	1	0
7	0	0	0	0	4	4	3

MATRIX 4.5. Maintenance Profile Index, Replaceable Units

Symbol: $\left[MP_{lk}\right]_5$

l = Localization Level
k = Isolation Level

l \ k	0	1	2	3	4	5	6
1	0	0	0	0	0	0	0
2	0	0	0	0	0	0	0
3	0	0	0	0	0	0	0
4	0	0	0	0	0	0	0
5	2	0	0	0	0	0	0
6	0	0	0	0	0	1	0
7	0	0	0	0	0	1	1

MATRIX 5. Maintenance Profile

Symbol: $\left[MAPRO_{mp} \right]_n$

m = Maintenance Profile Index

n = State-of-the-Art Code

p = NEM + 2(FI - 1)

NEM = Non-Electronic Maintenance Code

FI = Failure Indication Code

MATRIX 5.1. Maintenance Profile, No State-of-the-Art Advance

Symbol: $\left[MAPRO_{mp}\right]_1$

m \ p	1	2	3	4
1	57, 43, 0	14, 43, 43	43, 57, 0	0, 57, 43
2	100, 0, 0	25, 75, 0	75, 25, 0	0, 100, 0
3	55, 45, 0	22, 33, 45	33, 67, 0	0, 55, 45
4	63, 37, 0	26, 37, 37	37, 63, 0	0, 63, 37
5	100, 0, 0	20, 80, 0	80, 20, 0	0, 100, 0
6	54, 46, 0	18, 36, 46	36, 64, 0	0, 54, 46
7	60, 40, 0	20, 40, 40	40, 60, 0	0, 60, 40
8	67, 33, 0	23, 44, 33	44, 56, 0	0, 67, 33
9	62, 38, 0	12, 50, 38	50, 50, 0	0, 62, 38
10	67, 33, 0	12, 55, 33	55, 45, 0	0, 67, 33
11	100, 0, 0	17, 83, 0	83, 17, 0	0, 100, 0
12	12, 88, 0	12, 12, 76	9, 100, 0	0, 24, 76
13	13, 87, 0	13, 13, 74	0, 100, 0	0, 26, 74
14	14, 86, 0	14, 14, 72	0, 100, 0	0, 28, 72
15	15, 85, 0	15, 15, 70	0, 100, 0	0, 30, 70
16	17, 83, 0	17, 17, 66	0, 100, 0	0, 34, 66
17	21, 79, 0	21, 22, 57	0, 100, 0	0, 43, 57
18	14, 86, 0	14, 19, 67	0, 100, 0	0, 33, 67
19	15, 85, 0	15, 20, 65	0, 100, 0	0, 35, 65
20	20, 80, 0	20, 26, 54	0, 100, 0	0, 46, 54
21	14, 86, 0	14, 28, 58	0, 100, 0	0, 42, 58
22	33, 67, 0	33, 67, 0	0, 100, 0	0, 100, 0

MATRIX 5.2. Maintenance Profile, State-of-the-Art Advances

Symbol: $\left[MAPRO_{mp}\right]_2$

m \ p	1	2	3	4
1	57, 0, 43	14, 43, 43	43, 14, 43	0, 57, 43
2	100, 0, 0	25, 75, 0	75, 25, 0	0, 100, 0
3	55, 0, 45	22, 33, 45	33, 22, 45	0, 55, 45
4	63, 0, 37	26, 37, 37	37, 26, 37	0, 63, 37
5	100, 0, 0	20, 80, 0	80, 20, 0	0, 100, 0
6	54, 0, 46	18, 36, 46	36, 18, 46	0, 54, 46
7	60, 0, 40	20, 40, 40	40, 20, 40	0, 60, 40
8	67, 0, 33	23, 44, 33	44, 23, 33	0, 67, 33
9	62, 0, 38	12, 50, 38	50, 12, 38	0, 62, 38
10	67, 0, 33	12, 55, 33	55, 12, 33	0, 67, 33
11	100, 0, 0	17, 83, 0	83, 17, 0	0, 100, 0
12	12, 12, 76	12, 12, 76	0, 24, 76	0, 24, 76
13	13, 13, 74	13, 13, 74	0, 26, 74	0, 26, 74
14	14, 14, 72	14, 14, 72	0, 28, 72	0, 28, 72
15	15, 15, 70	15, 15, 70	0, 30, 70	0, 30, 70
16	17, 17, 66	17, 17, 66	0, 34, 66	0, 34, 66
17	21, 22, 57	21, 22, 57	0, 43, 57	0, 43, 57
18	14, 19, 67	14, 19, 67	0, 33, 67	0, 33, 67
19	15, 20, 65	15, 20, 65	0, 35, 65	0, 35, 65
20	20, 26, 54	20, 26, 54	0, 46, 54	0, 46, 54
21	14, 28, 58	14, 28, 58	0, 42, 58	0, 42, 58
22	33, 67, 0	33, 67, 0	0, 100, 0	0, 100, 0

MATRIX 6. Personnel Requirement Statement Numbers (Detail Procedure)

Symbol: $[S_{ij}]$

$$i = \frac{ECAT - 1300}{10}$$

j = Task Type and Complexity Code Number

i \ j	1	2	3	4	5	6	7	8	9	10	11	12	13
1	16	17	18	24	3	1	3	1	2	24	19	1	3
2	20	21	22	23	6	21	22	25	26	23	27	5	6
3	30	31	32	33	34	30	33	30	33	35	36	30	33
4	10	11	37	11	12	10	11	10	11	11	12	38	39
5	40	41	42	43	44	45	43	45	44	43	44	45	46

MATRIX 7. Personnel Requirement Statement (Procedure B)

Symbol: $\left[SB_{ij}\right]$

$$i = \frac{ECA_i - 1300}{10}$$

j = Skill Level

i \ j	A	B	C
1	1	2	3
2	4	5	6
3	7	8	9
4	10	11	12
5	13	14	15

5. CODED MATHEMATICAL EXPRESSIONS. The mathematical operations involved in the application of the CMB Prediction Procedure consist of multiplications and summations of data such as failure rates and task times. Mathematical expressions defining these operations were developed in a format that permits the direct application of data from the Input Data Sheets, together with the data matrices developed in this section. The set of "coded mathematical expressions" resulting from this development provide the mathematical model that was used as the basis for the system flow charts.

5.1 Coded Mathematical Expressions For The Detail Procedure. Application of the Detail Procedure involves calculations of replaceable item failure rate, task maintenance burdens, and corrective maintenance burdens by task type and skill level. Expressions for performing these calculations are as follows:

a. Line Item Failure Rate. The failure rate of a line item can be determined as a matrix multiplication such that:

$$FRATE = \left[FAIL_1 , FAIL_2 , \ldots\ldots FAIL_{13} \right] \times \begin{bmatrix} HFR_1 \\ HFR_2 \\ \cdot \\ \cdot \\ \cdot \\ HFR_{13} \end{bmatrix}$$

where: FRATE = The failure rate of a line item.

$FAIL_i$ = The number of high failure rate parts of category i. For a given line item, $FAIL_i$ = the quantity recorded in a High Failure Rate Parts Count column of the Input Data Sheet, when i identifies the respective columns as follows:

i	Definition
1	Receiving Tubes
2	Special Purpose and Transmitting Tubes
3	Cathode Ray Tubes
4	Magnetrons
5	Transistors
6	Semiconductor Diodes
7	Relays
8	Vibrators
9	Synchros
10	Resolvers
11	Blowers
12	Other Motors
13	Vacuum Capacitors

$\left[HFR_i \right]$ = Matrix 1 of Paragraph 4.

b. Equipment Failure Rate. The equipment failure rate is obtained by summing the individual line item failure rates such that:

$$EFR = \sum_{j=1}^{t} FRATE_j$$

where: EFR = the equipment failure rate
$FRATE_j$ = the failure rate of line item j

i = a line item number
t = the total number of line items

c. Task Maintenance Burden. The Task Maintenance Burden for a line item can be stated in matrix notation such that:

$$\left[TMB\right]_j = \left[TT_1, TT_2, \ldots\ldots TT_{13}\right] \times \left(FRATE_j\right)$$

where: [TMB] = the task maintenance burden for line item j.
$FRATE_j$ = the failure rate of line item j.
TT_i = a set of task times taken from $\left[ATT_{ik}\right]_j$ (Matrices 2.1 through 2.6), where i indicates the task type and complexity and is related to j as follows:

i	j
1,2, or 3	1
4 or 5	2
6 or 7	3
8 or 9	4
10 or 11	5
12 or 13	6

d. CMB By Task Type. The CMB By Task Type (or equipment task time ETT) is determined by summing the TMB values by column, such that:

$$\left[CMB\right] = \sum_{j=1}^{t} TMB_j$$

where: CMB = a 1 x 13 matrix of CMB values for each task type.
TMB_j = the 1 x 13 matrix of TMB values for line item j.
t = the total number of line items.

e. Test Equipment Requirements. The only computation required in listing test equipment requirements is that of assuring that duplications are eliminated. This process is stated mathematically as follows:

> If the entire list of test equipment codes recorded on the Input Data Sheet is indicated as the universal set $\{ te_1, te_2, \ldots te_n \}$, then the test equipment requirements for the equipment can be determined by listing all of the different types of test equipments indicated by the codes in this set. Thus, the test equipment requirements are generated by listing the elements of the universal set in the order of their appearance on the Input Data Sheet, providing any element, te_m, to be listed next meets the criteria:
>
> $te_m \neq$ any element in the subset $\{ te_1, te_2 \ldots te_{m-1} \}$,
>
> and $m \leq n$.

f. Personnel Requirements. The personnel requirement implications are statements associating maintenance personnel rating and rate with task type and equipment category and, therefore, are qualitative functions. However, since the statements will be stored in computer memory, a mathematical computation will be required to determine the address of the desired statement. Matrix 6, $[S_{ij}]$, provides statement numbers for the personnel requirement statements. Each element, S_{ij} is the number of a particular statement. The row number, i, is related to the equipment category codes as follows:

$$i = \frac{ECAT - 1300}{10}$$

where ECAT is the equipment category code for the equipment under consideration.

The column number, j, is determined by the task type and complexity as follows:

Task Type/ Complexity	i
L1	1
L2	2
L3	3
IS1	4
IS2	5

Task Type/ Complexity	i
A1	6
A2	7
IN1	8
IN2	9
AL1	10
AL2	11
C1	12
C2	13

5.2 Coded Mathematical Expressions For Procedure C. The computations involved in the application of Procedure C are basically the same as those for the Detail Procedure. Therefore, most of the coded mathematical expressions developed in paragraph 5.1 are applicable. The degree of application is discussed below, together with the development of additional expressions that are tailored to the specific requirements of Procedure C.

a. Line Item Failure Rate. The expression developed for the Detail Procedure is applicable, without alteration, to Procedure C.

b. Equipment Failure Rate. The expression in paragraph 5.1b for summing line item failure rates to obtain the equipment failure rate is applicable to Procedure C without revision.

c. Task Maintenance Burden. The expression in paragraph 5.1c for multiplying each task time by the line item failure rate is applicable to Procedure C without revision.

d. CMB By Task Type. The expression in paragraph 5.1d for summing task time to obtain the CMB is applicable to Procedure C without revision.

e. Skill Level Analysis. The maintenance hours required for Skill Levels A, B, and C are calculated by summing the CMB values for all task types that are performed at the same skill level. The skill levels are associated with each task type as follows:

Task Type	Code	Skill Level
L1	1	A
L2	2	B
IS1	4	B
IS2	5	C
A1	6	A
A2	7	B
IN1	8	A
IN2	9	B
C1	12	A
C2	13	B

The hours required for the different skill levels are determined by summing the hours required for respective task types as follows:

$$HSKLA = ETT_1 + ETT_6 + ETT_8 + ETT_{12}$$

$$HSKLB = ETT_2 + ETT_4 + ETT_7 + ETT_9 + ETT_{13}$$

$$HSKLC = ETT_5$$

where: HSKLA = the hours required for Skill Level A
HSKLB = the hours required for Skill Level B
HSKLC = the hours required for Skill Level C
ETT_1, ETT_2, etc. = equipment task time for the task type indicated. This is equal to the CMB for a given task type.

f. Personnel Requirements. The personnel requirements for Procedure C are determined using the same basic calculations as for the Detail Procedure.

5.3 Coded Mathematical Expressions For Procedure B. The application of Procedure B involves table look-ups and subsequent calculations to determine failure rate, MTTR, and repair time, and for apportioning the repair time among each of three skill levels. Expressions for performing these calculations are as follows:

a. Equipment Failure Rate. The failure rate of the equipment is either taken directly from the specified or previously predicted value, or it is calculated from the specified MTBF using the expression.

$$\text{Equipment Failure Rate} = \frac{1}{MTBF}$$

The failure rate is assumed to be based on 1000 hours of equipment operation. If the failure rate is based on 10^6 hours of equipment operation, an appropriate conversion is to be performed.

b. Major Subdivision Failure Rate. The average failure rate of major equipment subdivision is calculated from:

$$\text{Major Equipment Subdivision Failure Rate} = \frac{\text{Equipment Failure Rate}}{\text{Number of Subdivisions}}$$

c. MTTR. The MTTR is predicted by selecting the appropriate value from the MTTR matrix $\left[MTTR_{lkj} \right]$, where l, k, and j are determined as follows:

l = the code number for the functional level of localization.
k = the code number for the functional level of isolation.
j = the replaceable item functional level code number.

d. Skill Level Percentages. The percentages of total repair time for each skill level is obtained from matrix $\left[MAPRO_{mpn}\right]$, where, m, p, and n are determined or calculated as follows:

m = the maintenance profile index determined from matrix $\left[MP_{lkj}\right]$, where l, k, and j are determined as in item c, above.

p = NEM + (FI-l)(2), where:

NEM - the code number for non-electronic maintenance requirement.

FI = the code number for failure indicator type.

n = the code number for advancement in the state-of-the-art.

e. CMB By Skill Level. The number of hours required for each skill level is determined by first calculating the total repair time for each major subdivision using the expression:

$$RT_i = (MTTR_i)(\text{Failure Rate}_i)$$

where: RT_i = the total repair time for major subdivision i.

$MTTR_i$ = the MTTR of major subdivision i.

Failure Rate_i = the failure rate of major subdivision i.

In addition, the skill level percentages, as determined in item d above, are converted to decimal fractions as follows:

$$\left[SKL\right] = (.01)(MAPRO)$$

where: MAPRO = the maintenance profile as determined in item d above. This is a 1 x 3 matrix in the form [%A, %B, %C].

$\left[SKL\right]$ = a 1 x 3 matrix of decimal fractions in the form [SKLA, SKLB, SKLC], where SKLA = the fraction of RT_i requiring skill level A, etc.

The hours for each skill level is determined as:

$$\left[HSKL\right]_i = RT_i \left[SKL\right]_i = \left[HSKLA_i, HSKLB_i, HSKLC_i\right]$$

where: $HSKLA_i$ = the hours of Skill Level A required for major subdivision i.
$HSKLB_i$ = the hours of Skill Level B required for major subdivision i.
$HSKLC_i$ = the hours of Skill Level C required for major subdivision i.

Finally, the total equipment repair time requirements are obtained using the expression:

$$[THSKL] = \left[\sum_{i=1}^{n} HSKLA_i , \sum_{i=1}^{n} HSKLB_i , \sum_{i=1}^{n} HSKLC_i \right]$$

where $[THSKL]$ is a 1 x 3 matrix, the elements of which are equal to the total hours required for Skill Levels A, B, and C, respectively, for the overall equipment.

f. Personnel Requirements. The personnel requirements for Procedure B are determined using the same basic calculations as for the Detail Procedure, with the exception that the statement numbers are related to the skill level rather than to task type. Matrix 7, $[SB_{ij}]$, provides statement numbers for the personnel requirement statements. The row number, i, is related to the equipment category codes as follows:

$$i = \frac{ECAT - 1300}{10}$$

The column, j, is determined by skill level directly.

Matrix $[SB_{ij}]$ is combined with $[S_{ij}]$ in the development of the Flow Charts.

SECTION 4

PREPARATION OF SYSTEM FLOW CHARTS

SECTION 4

PREPRATION OF SYSTEM FLOW CHARTS

1. FLOW CHART DEVELOPMENT. The preliminary development work described in the first three sections of this report provided the input data formats, computational matrices, coded mathematical expressions and suggested output formats that are amenable to automatic data processing application of the CMB Prediction Procedure. Based on these developments, system flow charts were prepared to depict in a graphical form the steps and operations required to facilitate computer programming of the Detail Procedure, Procedure C and Procedure B.

The flow charts are presented in Volume II of this report. These charts were prepared in sufficient detail to permit direct translation of the indicated operation into instructions for a given computer. In addition, the standardized format of the flow charts will permit the computer programming to be performed by a systems analyst or programmer other than the individual who prepared the flow charts.

2. FLOW CHART FORMAT. The system flow charts were prepared in a format that permit universal application to any of the current types of computers that might be considered for use in the application of the CMB Prediction Procedure. The diagram symbology is standardized and is readily understood by any practicing systems analyst or programmer. In addition, all symbols and codes that are unique to the CMB Prediction Procedure have been completely defined and explained.

2.1 Flow Chart Symbology. The symbols used for the various blocks of the flow chart are defined in Figure 4-1. All coding used in the flow charts is defined in Volume II.

2.2 Addresses. All addresses are presented in the form A + X where A in an initial storage location to be established by the programmer, and X is an additive term, either calculated or fixed, that indicates the appropriate number of storage locations following the initial location.

2.3 Iterations. Essential iterations are shown in the detail necessary for complete application of the CMB procedures. For example, a branch function is repeated until all items of interest have been accounted for. However, basic operations such as multiplication and division are indicated by symbol only. The actual process of performing such operations is usually accomplished by a standard routine and, in any case, will vary depending on the particular computer used.

2.4 Example of Format. Figure 4-2 is an example of the format used in preparing the System Flow Chart. This figure is the sub-branch in which the line item failure rate is calculated during the application of the Detail Procedure or Procedure C. The utility of the chart is illustrated in Figure 4-3, where the program for this particular sub-branch has been written using the FORTRAN language. Other appropriate languages could be used with comparable ease.

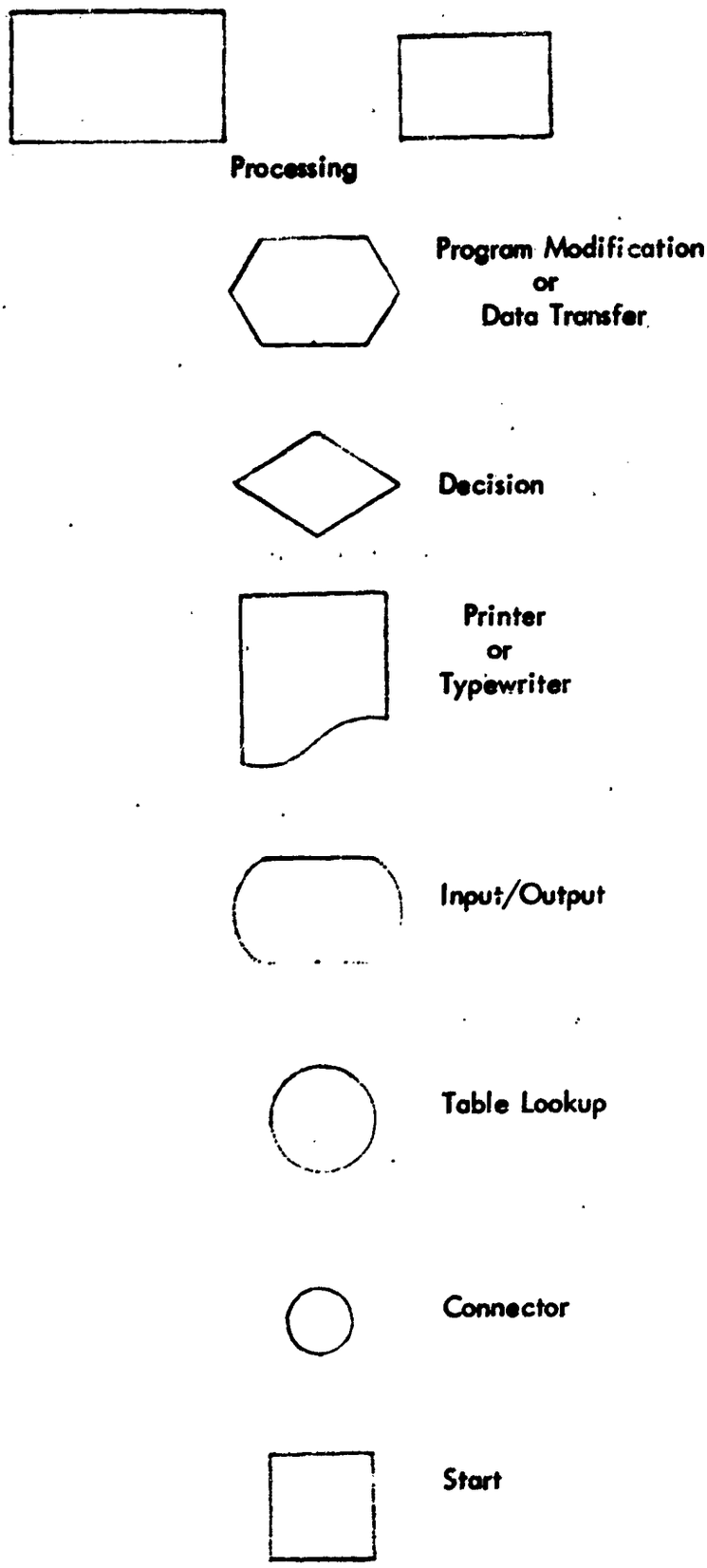

Figure 4-1. Flow Chart Symbols

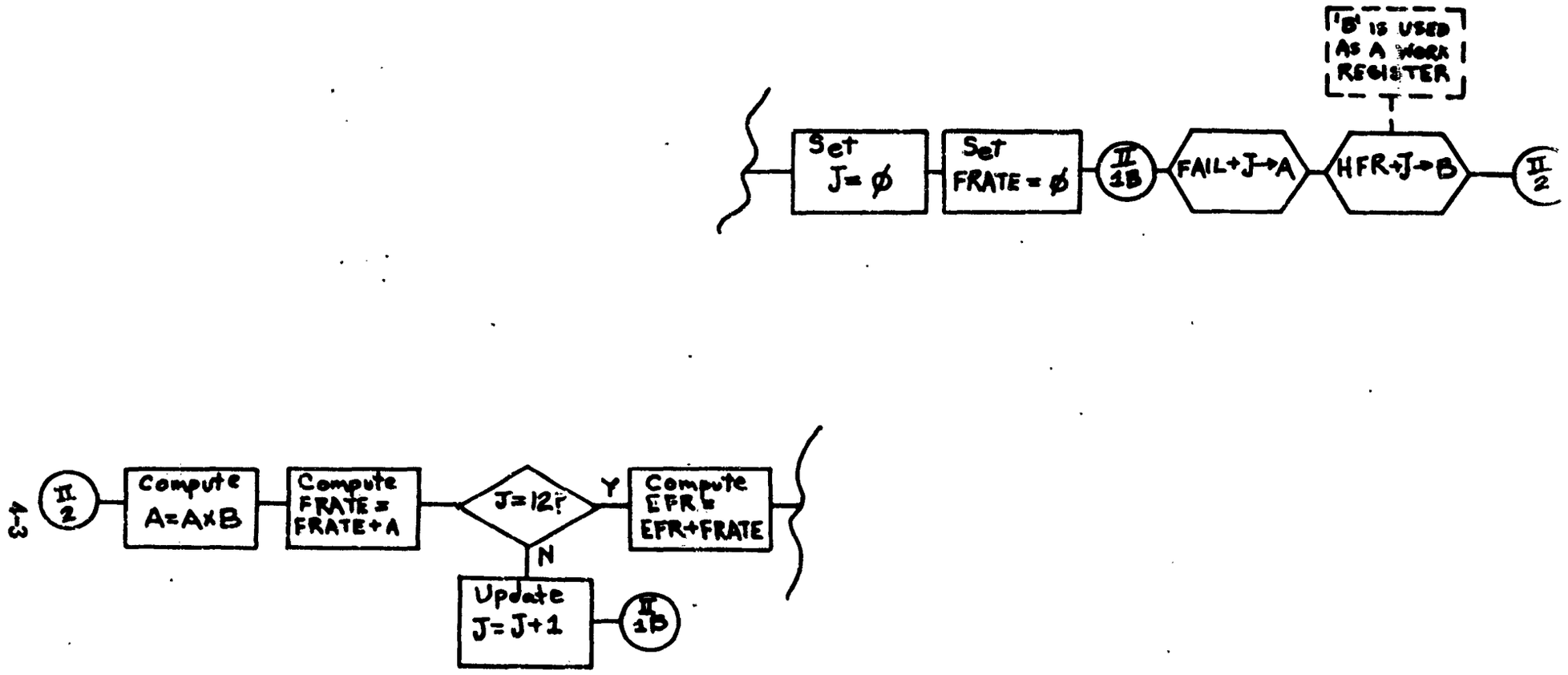

Figure 4-2. Example of System Flow Chart Format

```
C  FORTRAN PROGRAM FOR DETAIL AND C
C  SUPPLEMENTARY CORRECTIVE MAINTENANCE
C  BURDEN PREDICTION PROCEDURE

C  THIS IS A PARTIAL PROGRAM, SEE PAGE 2
C  OF THE FLOW CHART
C  THIS PORTION CALCULATES FAILURE
C  RATES

      FRATE=Ø.Ø
      DO 2Ø J=1,13
      A=FAIL(J)
      B=HFR(J)
      A=A*B
   2Ø FRATE=FRATE+A
      EFR=EFR+FRATE

C  THE FAILURE RATE FOR ONE LINE ITEM
C  IS NOW COMPUTED
C  EQUIPMENT FAILURE RATE IS COMPUTED
C  BY SUMMING LINE ITEM FAILURE RATES
```

Figure 4-3. FORTRAN Program For Line Item Failure Rate Calculation

APPENDIX

DEMONSTRATION CHECK DATA

APPENDIX

This appendix contains the data developed in performing the checks of the mathematical model and the flow charts for each of the three procedures. These data are divided into three major sections, one for each procedure. Each major section contains a description of the equipment items that are used as subjects for the checks, and (1) an application of the manual procedure to provide a reference for the checks, (2) solution of the mathematical model using the subject data, and (3) a desk check of the System Flow Chart as applied to the respective procedure. The validity of the mathematical model and flow chart is verified by comparison with the results of the manual application.

1. DEMONSTRATION CHECK FOR THE DETAIL PROCEDURE. The mathematical model and flow charts for the Detail Procedure were checked by comparing the solution of the model, and a desk check of the flow charts with the results of a manual application of the procedure. The input data for this demonstration is extracted from the description of the hypothetical equipment (AN/XYZ-1) that was used for the example in the Procedural Instructions (Report No. ND 65-36).

The functional Breakdown Diagram of the AN/XYZ-1 is shown in Figure 1. The demonstration was performed by considering only the Antenna Group and subassembly 2A2A1. These two equipment items are assumed to contain the following high failure rate parts:

Antenna Group	1 Synchro
	1 Motor
Subassembly 2A2A1	1 Receiving Tube

1.1 Application of the Manual Procedure. The manual application of the Detail Procedure was performed in accordance with the Procedural Instructions in Report No. ND 65-36. Worksheets prepared during this application are shown in Figures 2 through 4. The CMB Preliminary Data Sheet (Figure 2) contains the data for the entire equipment. Subsequent worksheets, however, consider only the Antenna Group and Subassembly 2A2A1, and treat these data as though the two items constitute an entire equipment.

Personnel requirements for each applicable task type for communications equipment are determined from Table 3-4 of Section 3. The minimum rate, within the ETN rating structure, that would be capable of performing each task type for the AN/XYZ-1, together with the areas in which special training will be required, is listed.

Task Type	Personnel Requirement
L2	ETNSN or RM3 qualified for advancement to ETN3 or RM2 respectively.
L3	ETN3 or RM2 qualified for advancement to ETN2 or RM1 respectively, with special training on the equipment.
IS1	ETN3 qualified for advancement to ETN2.
A1	ETNSN or RM3 qualified for advancement to ETN3 or RM2 respectively.
A2	ETN3 or RM2 qualified for advancement to ETN2 or RM1 respectively, with special training on the equipment.
IN1	ETNSN or RM3 with on-the-job-training.
IN2	ETNSN or RM2 qualified for advancement to ETN3 or RM1 respectively.
AL1	ETN3 qualified for advancement to ETN2.
C1	ETNSN qualified for advancement to ETN3.
C2	ETN3 qualified for advancement to ETN2 with special training.

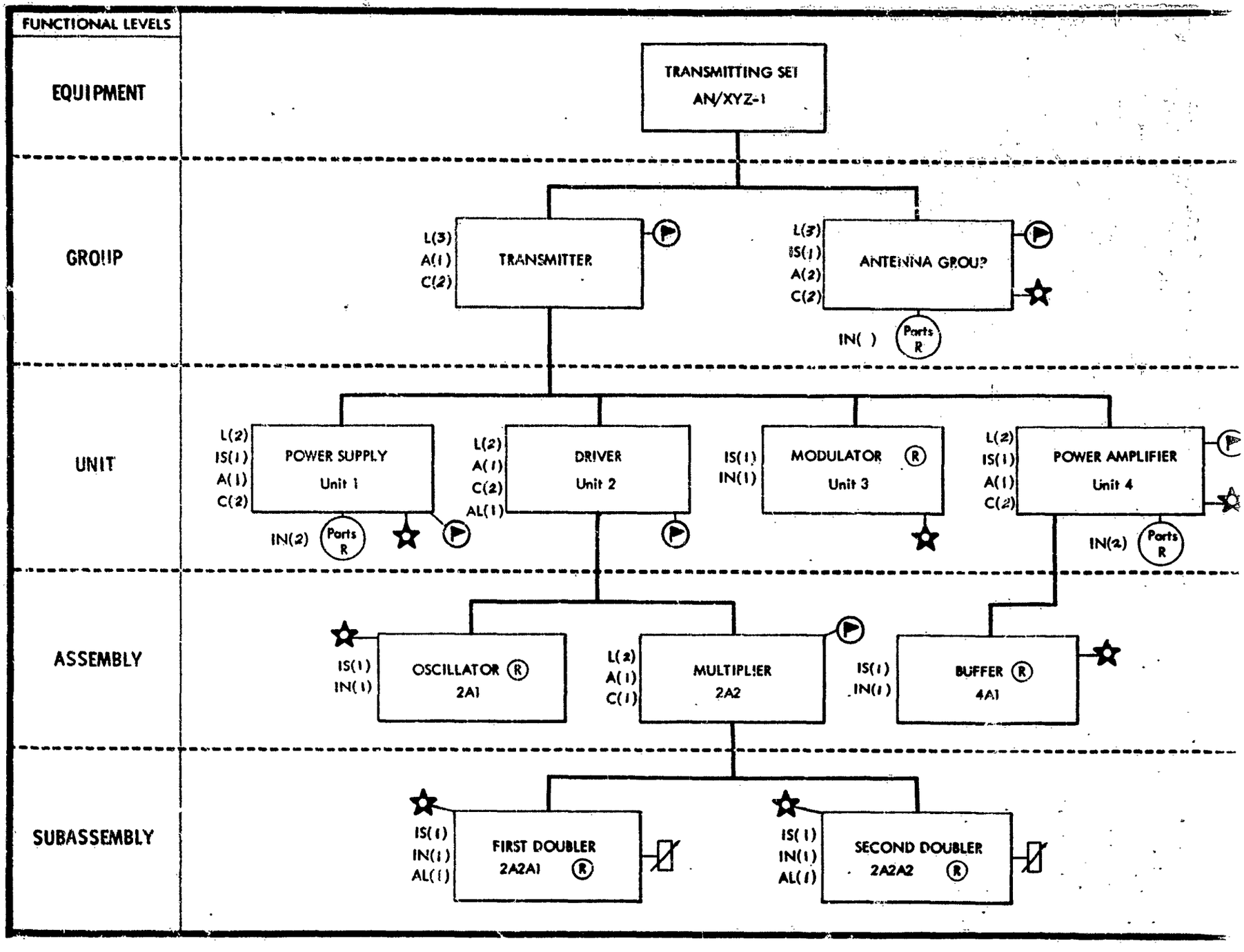
FUNCTIONAL LEVELS
EQUIPMENT
GROUP
UNIT
ASSEMBLY
SUBASSEMBLY
TRANSMITTING SET
AN/XYZ-1
L(3)
A(1)
C(2)
TRANSMITTER
L(3)
IS(1)
A(2)
C(2)
ANTENNA GROUP
IN( )
Parts
R
L(2)
IS(1)
A(1)
C(2)
POWER SUPPLY
Unit 1
IN(2)
Parts
R
L(2)
A(1)
C(2)
AL(1)
DRIVER
Unit 2
IS(1)
IN(1)
MODULATOR
Unit 3
L(2)
IS(1)
A(1)
C(2)
POWER AMPLIFIER
Unit 4
IN(2)
Parts
R
IS(1)
IN(1)
OSCILLATOR
2A1
L(2)
A(1)
C(1)
MULTIPLIER
2A2
IS(1)
IN(1)
BUFFER
4A1
IS(1)
IN(1)
AL(1)
FIRST DOUBLER
2A2A1
IS(1)
IN(1)
AL(1)
SECOND DOUBLER
2A2A2

CMB PRELIMINARY DATA SHEET

EQUIPMENT RADIO TRANSMITTER AN/XYZ-1 SHEET 1 OF 2

GROUP	UNIT	ASSEMBLY	SUBASSEMBLY	STAGE	PART	TEST EQUIPMENT	DISPOSITION OF ITEM	REMARKS
TRANSMIT.								
	POWER SUPPLY 1 L(2) IS(1) A(1) C(2)				100.50 IN(2)	VTVM WITH H.V. PROBE	THROWAWAY	HI-VOLTAGE
	DRIVER 2							
	L(2) A(1) C(2)	OSC. AL(1) 2A1 IS(1) 42.30 IN(1)				MULTIMETER FREQ. METER	BENCH MAINT.	
		MULT. 2A2						
		L(2) A(1) C(1)	1ST. DOUBL. 2A2A1 IS(1) AL(1) 14.10 IN(1)				BENCH MAINT.	
		L(2) A(1) C(1)	2ND. DOUBL. 2A2A2 IS(1) AL(1) 14.10 IN(1)				BENCH MAINT.	
L(3) A(1) C(2)	MODULATOR 3 IS(1) 113.96 IN(1)					MULTIMETER AUDIO OSC. OSCILLOSCOPE	BENCH MAINT.	

FEE

CMB PRELIMINARY DATA SHEET

EQUIPMENT RADIO TRANSMITTER AN/XYZ-1 SHEET 2 OF 2

GROUP	UNIT	ASSEMBLY	SUBASSEMBLY	STAGE	PART	TEST EQUIPMENT	DISPOSITION OF ITEM	REMARKS
	POWER AMP 4 IS(1) L(2) C(2) A(1)				8.59 IN(2)	MULTIMETER	THROWAWAY	
	L(2) A(1) C(1)	BUFFER 4A1 IS(1) 14.10 IN(1)					BENCH MAINT.	
ANT. GROUP IS(1) L(3) C(2) A(2)					7.64 IN(2)	VSWR BRIDGE MULTIMETER	THROWAWAY	SPECIAL TEST PROCEDURES MECHANICAL GEAR TRAIN

FEE-188

FIGURE 2 CMB PRELIMINARY DATA SHEET

EQUIPMENT: AN/XYZ-1

CMB TASK ANALYSIS FORM

MAINTENANCE ACTION & TASKS	PERSONNEL & TRAINING IMPLICATIONS		MAINTENANCE BURDEN															REMARKS
	SPECIAL SELECTION CRITERIA	TRAINING REQUIREMENTS	FAILURE RATE λ	AVERAGE TASK TIME ATT	TASK MAINTENANCE BURDEN (TMB)													
					L1	L2	L3	IS1	IS2	A1	A2	IN1	IN2	AL1	AL2	C1	C2	
REPAIR MULT. ASS'Y BY REPLACING SUBASS'Y 2A2A1			14.10															
L (2) ASS'Y				0.03		0.42												
IS (1) SUBASS'Y				0.27				3.81										
A (1) ASS'Y				0.31						4.37								
IN (1) SUBASS'Y				0.10								1.41						
AL (1) SUBASS'Y				0.05										0.71				
C (1) ASS'Y				0.15												2.12		
REPAIR ANT. GROUP BY REPLACING PARTS			7.64															
L (3) GROUP		TRAINING IN USE OF VSWR		0.11			0.84											
IS (1) GROUP				1.82				13.90										
A (2) GROUP		MECHANICAL GEAR TRAIN		0.16							1.22							
IN (2) PARTS				0.20									1.53					
AL (0)				0.0														
C (2) GROUP				0.12													0.92	
REPAIR																		
L																		
IS																		
A																		
IN																		
AL																		
C																		
REPAIR																		
L																		
IS																		
A																		
IN																		
AL																		
C																		
				Σ TMB		0.42	0.84	17.71		4.37	1.22	1.41	1.53	0.71		2.12	0.92	

FEE-1 92

SHEET 1 OF

Figure 3. CMB Task Analysis Form

SHEET ___ OF ___

TASK MAINTENANCE BURDEN

PAGE	L1	L2	L3	IS1	IS2	A1	A2	IN1	IN2	AL1	AL2	C1	C2
1		0.42	0.84	12.71		4.37	1.22	1.41	1.53	0.71		2.12	0.92
SUB-TOTALS													
TOTALS		0.42	0.84	12.71		4.37	1.22	1.41	1.53	0.71		2.12	0.92

Figure 4. CMB Summary Sheet

Σ TOTALS 31.25

FEE-190

1.2 Solution of the Mathematical Model. The coded mathematical expressions for the Detail Procedure were solved using the same input data as in the demonstration of the manual application. These expressions were solved as follows:

a. Failure Rate Computation.

$$FRATE_i = [FAIL_i] [HFR]$$

$$[FAIL]_1 = [1, 0, 0, 0, 0, 0, 0, 0, 0, 0, 0, 0, 0]$$

$$[FAIL]_2 = [0, 0, 0, 0, 0, 0, 0, 0, 1, 0, 0, 1, 0]$$

$$[HFR] = \begin{bmatrix} 14.10 \\ 38.92 \\ 21.63 \\ 487.01 \\ 3.26 \\ 1.16 \\ 2.86 \\ 32.18 \\ 1.80 \\ 25.47 \\ 2.85 \\ 5.84 \\ 3.08 \end{bmatrix}$$

$$FRATE_1 = 1 \times 14.10 + 0 = 14.10$$

$$FRATE_2 = 1 \times 1.80 + 1 \times 5.84 = 7.64$$

b. Equipment Failure Rate.

$$EFR = \sum_{i=1}^{t} FRATE_i$$

$$EFR = 14.10 + 7.64 = 21.74$$

c. Task Maintenance Burden

$$[TMB]_i = [TT_i] \times (FRATE_i)$$

$[TT_i]$ = a 1 x 13 matrix of task times taken from $[ATT_{lk}]_i$, such that:

$$[TT_i] = [ATT_{lk1}, \ldots\ldots ATT_{lk6}]$$

For Line Item 1:

$TT = 0$
$TT_1 = ATT_{4,3,1} = 0.03$
$TT_2 = 0$
$TT_3 = 0$
$TT_4 = ATT_{3,3,2} = 0.27$
$TT_5 = 0$
$TT_6 = ATT_{4,3,3} = 0.31$
$TT_7 = 0$
$TT_8 = ATT_{3,3,4} = 0.10$
$TT_9 = 0$
$TT_{10} = ATT_{3,3,5} = 0.05$
$TT_{11} = 0$
$TT_{12} = ATT_{4,3,6} = 0.15$
$TT_{13} = 0$

For Line Item 2:

$TT_1 = 0$
$TT_2 = 0$
$TT_3 = ATT_{6,1,1} = 0.11$
$TT_4 = ATT_{6,1,2} = 1.82$
$TT_5 = 0$
$TT_6 = 0$
$TT_7 = ATT_{6,1,3} = 0.16$
$TT_8 = 0$
$TT_9 = ATT_{1,1,4} = 0.20$
$TT_{10} = 0$
$TT_{11} = 0$
$TT_{12} = 0$
$TT_{13} = ATT_{6,1,6} = 0.12$

$$[TMB]_1 = [0, 0.03, 0, 0.27, 0, 0.31, 0, 0.10, 0, 0.5, 0, 0.15, 0] \times (14.10) = 0, 0.42, 0, 3.81, 0, 4.37, 0, 1.41, 0, 0.71, 0, 2.12, 0$$

$$[TMB]_2 = [0, 0, 0.11, 1.82, 0, 0, 0.16, 0, 0.20, 0, 0, 0, 0.12] \times (7.64) = 0, 0, 0.84, 13.90, 0, 0, 1.22, 0, 1.53, 0, 0, 0, 0.92$$

d. <u>CMB By Task Type</u>

$$[CMB] = \sum_{i=1}^{t} [TMB]_i$$

$$[CMB] = [0, 0.42, 0.84, 17.71, 0, 4.37, 1.22, 1.41, 1.53, 0.71, 0, 2.12, 0.92]$$

e. <u>Test Equipment Requirements</u>. This portion of the model is not applicable to this demonstration because there are no repetitions.

f. Personnel Requirements. Personnel Requirement statement numbers are obtained from $\left[S_{ij}\right]$, where

$$i = \frac{ECAT - 1300}{10} = \frac{1320 - 1300}{10} = 2$$

j = task type and complexity code.

The statement numbers are obtained as elements in row 2 of Matrix 6. The appropriate statement numbers and the respective statements are listed in Table 1.

TABLE 1. PERSONNEL REQUIREMENT STATEMENTS

j	SN	Statement
2	21	ETNSN or RM3 qualified for advancement to ETN3 or RM2.
3	22	ETN3 or RM2 qualified for advanvement to ETN2 or RM1 and has specialized training on equipment.
4	23	ETN3 qualified for advancement to ETN2.
6	21	ETNSN or RM3 qualified for advancement to ETN3 or RM2.
7	22	ETN3 or RM3 qualified for advancement to ETN2 or RM1 and has specialized training on equipment.
8	25	ETNSN or RM3 with on-the-job training.
9	26	ETNSN or RM2 qualified for advancement to ETN3 or RM1.
10	23	ETN3 qualified for advancement to ETN2.
12	5	ETNSN qualified for advancement to ETN3.
13	6	ETN3 qualified for advancement to ETN2 and has special training on equipment.

1.3 Demonstration Check of Flow Chart. The System Flow Chart for the Detail Procedure was checked using the same problem as was used to solve the mathematical model. An Input Data Sheet containing the appropriate input data is shown in Figure 5. The desk check in the following pages represents all of the actions that would be performed by a computer that was programmed according to the flow charts. This desk check proceeds from the top to the bottom of the left-hand column, and then from the top to the bottom of the right-hand column of each page. A simulated print-out of the output data is shown at the end of the desk check.

INPUT DATA SHEET

PAGE ____ OF ____

A	NOMENCLATURE: AN/XYZ-1	EQUIP. category: 1320
B	ANALYST: JOHN DOE	Date Mo. day year: 04 29 66

C

ITEM IDENTIFICATION						HIGH FAILURE RATE PARTS COUNT												TASK TYPE AND COMPLEXITY							TEST EQUIP.			SKILL KNOWLEDGE AND TRAINING REQUIREMENTS						
EQUIPMENT	GROUP	UNIT	ASSEMBLY	SUBASSEMBLY	REPL. ITEM	RECEIVING TUBES	SPECIAL PURPOSE & TRANS. TUBES	CRT TUBES	MAGNETRONS	TRANSISTORS	DIODES	RELAYS	VIBRATORS	SYNCHROS	RESOLVERS	BLOWERS	OTHER MOTORS	VACUUM CAP.	L1 L2 L3	IS1 IS2	A1 A2	IN1 IN2	AL1 AL2	C1 C2	T1	T2	DISP. OF ITEM	R1	R2	R3	R4	R5	R6	LAST CARD
0	0	0	2	0	2	0	0	1	3	0	0	1	0	0	0	0	0	0	0	0	0	0	0	0	0	0	0	2	0	0	0	0	0	0	0
0	2	0	0	0	0	0	1	0	0	0	0	0	0	0	0	0	0	0	0	0	0	0	0	0	6	4	8	2	1	0	0	0	0	0	1

FIGURE 5 INPUT DATA SHEET
DETAIL PROCEDURE

START

REWIND TP1

REWIND TP2

K = 0

RECT = 0

RECT = 0

INPUT FOLLOWING DATA

PNAME	(PROGRAMMER)
MO	(MONTH)
DA	(DAY)
YR	(YEAR)

OUTPUT FOLLOWING HEADING

PROGRAMMER
DATE

OUTPUT FOLLOWING DATA

PNAME	(PROGRAMMER)
MO	(MONTH)
DA	(DAY)
YR	(YEAR)

DETAIL PROC. ?

YES

A = 0

ETT + K = A ETT = 0

TMB + K = A TMB = 0

K = 0 ≠ 12

K = K + 1 = 1

ETT + K = A ETT + 1 = 0

TMB + K = A TMB + 1 = 0

K = 1 ≠ 12

K = K + 1 = 2

ETT + K = A ETT + 2 = 0

TMB + K = A TMB + 2 = 0

.
.
.

ETT + K = A ETT + 12 = 0

TMB + K = A TMB + 12 = 0

K = 12?

YES

EFR = 0

OUTPUT HEADING

NOMENCLATURE

LAST DATA?

NO

INPUT DATA

NOMEN
ECAT

OUTPUT DATA

NOMEN (EQUIP. NOMENCLATURE)

OUTPUT HEADING

REPLACEMENT LEVEL
L1, L2, L3, IS1, IS2, A1, A2, IN1
IN2, AL1, AL2, C1, C2, and
DISPOSITION

REWIND MCT

LAST DATA?

NO

INPUT DATA

LINE = 1
EQUIP = 0
GRP = 0

[illegible] = 4

ASSY = 2

SASSY = 1

REPLI = 3

$FAIL_0 = 1$

$FAIL_1 = 0$

$FAIL_2 = 0$

$FAIL_3 = 0$

$FAIL_4 = 0$

$FAIL_5 = 0$

$FAIL_6 = 0$

$FAIL_7 = 0$

$FAIL_8 = 0$

$FAIL_9 = 0$

$FAIL_{10} = 0$

$FAIL_{11} = 0$

$FAIL_{12} = 0$

L1 = 0

L2 = 4

L3 = 0

IS1 = 3

IS2 = 0

A1 = 4

A2 = 0

IN1 = 3

IN2 = 0

AL1 = 3

AL2 = 0

C1 = 4

C2 = 0

T1 = 0

T2 = 0

DISP = 2

R1 = 0

R2 = 0

R3 = 0

R4 = 0

R5 = 0

R6 = 0

REPLI = 3 $\neq$ 0

J = 0

FRATE = 0

A = FAIL + J $A = FAIL_0 = 1$

B = HRF + J $B = HRF_0 = 14.1$

A = A X B = 1 X 14.1 = 14.1

FRATE = FRATE + A = 0 + 14.1 = 14.1

J = 12?

NO

J - J + 1 = 1

A = FAIL + J $A = FAIL_1 = 0$

B + HFR + J $B = HFR_1 = 38.92$

A = A X B = 0 X 38.92 = 0

FRATE = FRATE + A = 14.1 + 0 = 14.1

NOTE: ALL $FAIL_2$ to $FAIL_{12} = 0$ HENCE

BY LOOPING NOTHING WILL BE ADDED TO FRATE. THUS,

FRATE = 14.1

J = 12?

YES

EFR = EFR + FRATE = 0 + 14.1 = 14.1

L1 = 0 ?

YES

TMB = BLANK

L2 = 4 ≠ 0

I = 1

FL = L2 = 4

A = BLANK

TMB + 2 = A = BLANK

LOC = 0

A = FL-1 = 4-1 = 3

IX = 5 X A = 5 X 3 = 15

IX = IX + REPLI-1 = 15+3-1 = 17

IX = IX + LOC = 17 + 0 = 17

A = ATT + IX A=ATT + 17 = 0.03

A = AXFRATE = (.03)(14.1) = .423

TMB + I = A TMB + 1 = .423

B = ETT + I B = ETT + 1 = 0

B = A + B = .423 + 0 = .423

ETT + I = B ETT + 1 = .423

I = 1 ≠ 11

LOC = 0 ≠ 0

R1 = 0?

YES

IS1 = 3 ≠ 0

I = 3

FL = IS1 = 3

A = BLANK

TMB + 4 = A = BLANK

LOC = 35

A = FL-1 = 3-1 = 2

IX = 5 X 2 = 10

IX = IX + REPLI-1 = 10 + 3-1 = 12

IX = IX + LOC = 12 + 35 = 47

A = ATT + IX A + ATT + 47 = .27

A = A X FRATE = (.27)(14.1) = 3.807

TMB + I = A TMB + 3 = 3.807

B = ETT + I B = ETT + 3 = 0

B = A + B = 3.807 + 0 = 3.807

ETT + I = B ETT + 3 = 3.807

I = 3 ≠ 11 ?

LOC = 35 > 0

LOC = 35 ≯ 35

R2 = 0?

YES

A1 = 4 ≠ 0

I = 5

FL = A1 = 4

A = BLANK

TMB + 6 = A = BLANK

LOC = 70

A = FL-1 = 4-1 = 3

IX = 5 X A = 5 X 3 = 15

IX = IX + REPLI -1 = 15 + 3-1 = 17

IX = IX + LOC = 17 + 70 = 87

A = ATT + IX A = ATT + 87 = .31

A = A X FRATE = (.31)(14.1) = 4.371

TMB + I = A TMB + 5 = 4.371

B = ETT + I B = ETT + 5 = 0

B = A + B = 4.371 + 0 = 4.371

ETT + I = B ETT + 5 = 4.371

I - 5 $\not\geq$ 11

LOC = 70 > 0

LOC = 70 > 35

LOC = 70 $\not>$ 70

R3 = 0?

YES

IN1 = 3 $\neq$ 0

I = 7

FL = IN1 = 3

A = BLANK

TMB = 8 = A = BLANK

LOC = 105

A = FL-1 = 3-1 = 2

IX = 5 X A = 5 X 2 = 10

IX = IX + REPLI-1 = 10 + 3-1 = 12

IX = IX + LOC = 12 + 105 = 117

A = ATT + IX A = ATT + 117 = .10

A = A X FRATE = (.10)(14.1) = 1.41

TMB + I = A TMB + 7 = 1.41

B = ETT + I B = ETT + 7 = 0

B = A + B = 1.41 + 0 = 1.41

ETT + I = B ETT + 7 = 1.41

I = 7 $\not\geq$ 11

LOC = 105 > 0

LOC = 105 > 35

LOC = 105 > 70

LOC = 105 $\neq$ 105

R4 = 0?

YES

AL1 = 3 $\neq$ 0

I = 9

FL = AL1 = 3

A = BLANK

TMB + 10 = A = BLANK

LOC = 140

A = FL-1 = 3-1 = 2

IX = 5 X A = 5 X 2 = 10

IX = IX + REPLI-1 = 10+3-1 = 12

IX = IX+LOC = 12 + 140 = 152

A = ATT + IX A = ATT + 152 = .05

A = A X FRATE + (.05)(14.1) = .705

TMB + I = A TMB + 9 = .705

B = ETT + I B = ETT + 9 = 0

B = A + B = .705 + 0 = .705

ETT + I = B ETT + 9 = .705

I = 9 $\ngeq$ 11

LOC = 140 > 0

LOC = 140 > 35

LOC = 140 > 70

LOC = 140 > 105

LOC = 140 $\ngeq$ 140

R5 = 0?

YES

C1 = 4 $\neq$ 0

I = 11

FL = C1 = 4

A = BLANK

TMB + 12 = A = BLANK

LOC = 175

A = FL-1 = 4-1 = 3

IX = 5 X A = 5 X3 = 15

IX = IX + REPLI - 1 = 15+3-1 = 17

IX = IX + LOC = 17 + 175 = 192

A = ATT + IT A = ATT +192 = .15

A = A X FRATE = (.15)(14.1) = 2.115

TMB + I = A TMB + 11 = 2.115

B = ETT + I B = ETT + 11 = 0

B = A + B = 2.115 + 0 = 2.115

ETT + I = B ETT + 11 = 2.115

I = 11 $\geq$ 11

RE = 0?

YES

UNIT = 2 $\neq$ 0

UNITH = UNIT = 2

ASSY = 2 $\neq$ 0

ASSYH = ASSY = 2

SASSY = 1 $\neq$ 0

SASSYH = SASSY = 1

HOL = A_h

DISP = 2 $\neq$ 0

DISPH = $DISP_h$

DISP = 2 $\neq$ 1 $\neq$ 3

DISP = BENCH

OUTPUT DATA

GRPH = GROUP

GRP = 0

UNITH = 2

HOL = A

ASSYH = 2

HOL = A

SASSYH = 1

TMB = BLANK

TMB + 1 = .423

TMB + 2 = BLANK

. . . +3 = 3. 807

. . . + 4 = BLANK

TMB + 5 = 4.371

" + 6 = BLANK

" + 7 = 1.41

" + 8 = BLANK

" + 9 = .705

" + 10 = BLANK

" + 11 = 2.115

" + 12 = BLANK

DISPH = DISP

DISP = BENCH

T1 = 0?

YES

T2 = 0?

YES

LAST DATA ?

NO

LINE = 2

EQUIP = 0

GRP = 2

UNIT = 0

ASSY = 0

SASSY = 0

REPLI = 1

$FAIL_0 = 0$

$FAIL_1 = 0$

$FAIL_2 = 0$

$FAIL_3 = 0$

$FAIL_4 = 0$

$FAIL_5 = 0$

$FAIL_6 = 0$

$FAIL_7 = 0$

$FAIL_8 = 1$

$FAIL_9 = 0$

$FAIL_{10} = 0$

$FAIL_{11} = 1$

$FAIL_{12} = 0$

L1 = 0

L2 = 0

L3 = 6

IS1 = 6

IS2 = 0

A1 = 0

A2 = 6

IN1 = 0

IN2 = 1

AL1 = 0

AL2 = 0

C1 = 0

C2 = 6

T1 = 64

T2 = 82

DISP = 1

R1 = 0

R2 = 1531

R3 = 3429

R4 = 0

R5 = 0

R6 = 0

REPLI = 1 ≠ 0

J = 0

FRATE = 0

A = FAIL + J A = FAIL = 0

B = HRF + J B = HRF = 14.1

A = A X B = 0 X 14.1 = 0

FRATE = FRATE + A = 0 + 0 = 0

J = 0 ≠ 12

NOTE: SINCE FAIL + 1 to FAIL + 7, WILL NOT CHANGE THE VALUE OF FRATE, J IS BEING PICKED UP AT

J = 8

A = FAIL + J A = FAIL + 8 = 1

B = HRF + J B = HRF + 8 = 1.8

A = A X B = 1 X 1.8 = 1.8

FRATE = FRATE + A = 0 + 1.8

J = 8 ≠ 12

J = J + 1 = 9

NOTE: SINCE FAIL + 9 to FAIL + 10, WILL NOT CHANGE THE VALUE OF FRATE, J IS BEING PICKED UP AT

J = 11

A = FAIL + J A = FAIL + 11 = 1

B = HRF + J B = HRF + 11 = 5.84

A = A X B = 1 X 5.84 = 5.84

FRATE = FRATE + A = 1.8 + 5.84 = 7.64

J = 11 ≠ 12

J = J + 1 = 12

A = FAIL + J A = FAIL + 12 = 0

B = HRF + J B = HRF + 12 = 3.08

A = A X B = 0 X 3.08 = 0

FRATE = FRATE + A = 7.64 + 0 = 7.64

J = 12 ?

YES

EFR = EFR + FRATE = 14.1 + 7.64 = 21.74

L1 = 0 ?

YES

TMB = BLANK

L2 = 0 ?

YES

A = BLANK

TMB + 1 = A = BLANK

L3 = 6 x 0

I = 2

FL = L3 = 6

LOC = 0

A = FL-1 = 6-1 = 5

IX = 5XA = 5 X 5 = 25

IX = IX + REPLI - 1 = 25 + 1 - 1 = 25

IX = IX + LOC = 25 + 0 = 25

A = ATT + IX A = ATT + 25 = .11

A = A X FRATE = .11 X 7.64 = .8804

TMB + I = A TMB + 2 = .8404

B = ETT + I B = ETT + 2 = 0

B = A + B = .8404 + 0 = .8404

ETT + I = B ETT + 2 = .8404

I = 2 ≠ 11

LOC = 0 ≠ 0

R1 = 0?

YES

IS1 = 6 ≠ 0

I = 3

FL = IS1 = 6

A = BLANK

TMB + 4 = A = BLANK

LOC = 35

A = FL-1 = 6-1 = 5

IX = 5 X A = 5 X 5 = 25

IX = IX + REPLI -1 = 25 + 1-1 = 25

IX = IX + LOC = 25 + 35 = 60

A = ATT + IX A = ATT + 60 = 1.82

A = A X FRATE = 1.82 X 7.64 = 13.9048

TMB + I = A TMB + 3 = 13.9048

B = ETT + I B = ETT + 3 = 3.807

A = A + B = 13.9048 + 3.807 = 17.7118

ETT + I = B ETT + 3 = 17.7118

I = 3 ≠ 11

LOC = 35 ≠ 35

R2 = 1531 ≠ 0

COMPX = IS_h

R = R2 = 1531

DR = 2

WRITE TAPE TP2

LINE = 2
COMPX = IS_h
M = 1
A = 13.9048
R = 1531

RECS = RECS + 5 = 5

DR = 2

A1 = 0 ?

YES

A = BLANK

TMB + 5 = A BLANK

A2 = 6 ≠ 0

I = 6

M = 2

FL = A2 = 6

LOC = 70

A = FL-1 = 6-1 = 5

IX = 5 X A = 5 X 5 = 25

IX = IX + REPLI-1 = 25-1-1 = 25

IX = IX + LOC = 25 + 70 = 95

A = ATT + IX A = ATT + 95 = .16

A = A X FRATE = .16 X 7.64 = 1.2224

TMB + I = A TMB + 6 = 1.2224

B = A + B = 1.2224 + 0 = 1.2224

ETT + I = B ETT + 6 = 1.2224

I = 6 ≠ 11

LOC = 70 > 0

LOC = 70 > 35

LOC = 70 ≯ 70

R3 = 3429 ≠ 0

COMPX = A_h

R = R3 = 3429

DR = 3

WRITE TAPE TP2

LINE = 2
COMPX = A
M = 2
A = 1.2224
R = 3429

RECS = RECS + 5 = 5 + 5 = 10

DR = 3

IN1 = 0?

YES

A = BLANK

TMB + 7 = A = BLANK

IN 2 = 1 ≠ 0

I = 8

M = 2

FL = IN2 = 1

LOC = 105

A = FL-1 = 1-1 = 0

IX = 5 X A = 5 X 0 = 0

IX = IX + REPLI -1 = 0 + 1-1 = 0

IX = IX + LOC = 0 + 105 = 105

A = ATT + IX A = ATT + 105 = .2

A = A X FRATE = .2 X 7.64 = 1.528

TMB + I = A TMB + 8 = 1.528

B = ETT + I B = ETT + 8 = 0

B = A + B = 1.528 + 0 = 1.528

ETT + I = B ETT + 8 = 1.528

I = 8 ≠ 11

LOC = 105 > 0

LOC = 105 > 35

LOC = 105 > 70

LOC = 105 ≯ 105

R4 = 0?

YES

AL1 = 0?

YES

A = BLANK

TMB + 9 = A = BLANK

AL2 = 0?

YES

I = 10

LOC = 140

TMB + 10 = A = BLANK

I = 10 ≠ 11

LOC = 140 > 0

LOC = 140 > 35

LOC = 140 > 70

LOC = 140 > 105

LOC = 140 ≯ 140

R5 = 0?

YES

C1 = 0?

YES

A = BLANK

TMB + 11 = A = BLANK

C2 = 6 ≠ 0

I = 12

M = 2

FL = C2 = 6

LOC = 175

A = FL-1 = 6-1 = 5

IX = 5 X A = 5 X 5 = 25

IX = IX + REPLI - 1 = 25 + 1-1 = 25

IX = IX + LOC = 25 + 175 = 200

A = ATT + IX A = ATT + 200 = .12

A = A X FRATE = .12 X 7.64 = .9168

TMB + I = A TMB + 12 = .9168

B = ETT + I B = ETT + 12 = 0

B = A + B = .9168 + 0 = .9168

ETT + I = B ETT + 12 = .9168

I = 12 ≥ 11

R6 = 0?

YES

UNIT = 0 ?

YES

ASSY = 0 ?

YES

SASSY = 0 ?

YES

HOL = A_h

DISP = 1 ≠ 0

DISPH = $DISP_h$

DISP = 1 ?

YES

DISP = THROW WAY

OUTPUT DATA

GRPH = GROUP
GRP = 2
UNITH = 0

ASSYH = 0

SASSYH = 0
TMB = BLANK
TMB + 1 = BLANK
" +2 = .8404
" + 3 = 13.9048
" + 4 = BLANK
" + 5 = BLANK
" +6 = 1.2224
" +7 = BLANK
" +8 = 1.528
" +9 = BLANK
" +10 = BLANK
" + 11 = BLANK
" +12 = .9168
DISPH = DISP
DISP = THROW AWAY
T1 = 64 ≠ 0
T2 = 82 ≠ 0

PATH = 1

RECT = 0?

YES

WRITE ON TP1
T1 = 64

RECT = RECT + 1 = 1

WRITE ON TP 1
T2 = 82

RECT = RECT + 1 = 2

REWIND TP1

LAST DATA?

YES

OUTPUT HEADING
EQ. FAIL RATE
TMB BY TASK TYPES
L1, L2, L3, IS1, IS2, A1, A2,
IN1, IN2, AL1, AL2, C1, C2

OUTPUT DATA

EFR	= 21.74
ETT	= 0
ETT + 1	= .423
ETT + 2	= .8404
ETT + 3	= 17.7118
ETT + 4	= 0
ETT + 5	= 4.371
ETT + 6	= 1.2224
ETT + 7	= 1.41
ETT + 8	= 1.528
ETT + 9	= .705
ETT + 10	= 0
ETT + 11	= 2.115
ETT + 12	= .9168

A = ETT + 5 = 4.371

A = A + ETT = 4.371 + 0 = 4.371

B = ETT + 7 = 1.41

A = A + B = 4.371 + 1.41 = 5.781

B = ETT + 11 = 2.115

SKLVA = A + B = 5.781 + 2.115 = 7.896

A = ETT + 1 = .423

B = ETT + 3 = 17.7118

A = A + B = .423 + 17.7118 = 18.1348

B = ETT + 6 = 1.2224

A = A + B = 18.1348 + 1.2224 = 19.3572

B = ETT + 8 = 1.528

A = A + B = 19.3572 + 1.528 = 20.8852

B = ETT + 12 = .9168

SKLVB = A + B = 20.8852 + .9168 = 1.802

A = ETT + 4 = 0

C PROC ?

NO

B = ETT + 2 = .8404

A = A + B = 0 + .8404 = .8404

B = ETT + 10 = 0

SKLVC = A + B = .8404 + 0 = .8404

A = ETT + 9 = .705

SKLVB = SKLVB + A = 21.802 + .705 = 22.507

OUTPUT HEADING
HRS./1000 HRS. SKILL LEVEL A
HRS./1000 HRS. SKILL LEVEL B
HRS./1000 HRS. SKILL LEVEL C

OUTPUT DATA
SKLVA = 7.896
SKLVB = 22.507
SKLVC = .8404

RECT = 2 ≠ 0

OUTPUT HEADING
TEST EQ. USED

REWIND TP1

READ FROM TP1

TE = 64

TABLE LOOK-UP SHOULD GIVE

TE = STANDING WAVE INDICATOR

OUTPUT DATA
TE = STANDING WAVE INDICATOR

RECT = RECT - 1

RECT = 1 $\neq$ 0

READ FROM TP1

TE = 82

TABLE LOOK-UP SHOULD GIVE

TE = MULTIMETER

OUTPUT DATA
TE = MULTIMETER

RECT = RECT - 1

RECT = 0?

YES

CON = 1310

K = 0

E CAT = CON?

NO

K = 4?

NO

K = K + 1 = 0 + 1 = 1

CON = CON + 10 = 1310 + 10 = 1320

E CAT = CON?

YES

B PROC?

NO

J = 0

A = 0

PSN + J = A PSN = 0

PT1 + J = A PT1 = 0

J = 0 $\neq$ 24

J = J + 1

CONTINUE THIS LOOP UNTIL J = 24, RESULTING IN PT1 + 1 - PT1 + 24 AND PSN + 1 - PSN + 24 WILL ALL = 0 HENCE,

J = 24?

YES

J = 0

I = 0

OUTPUT HEADING
PERSONNEL REQUIREMENT
REQUIRED BY TASK

B = ETT + 1 B = ETT + 0

B = 0?

YES

I = 0 $\neq$ 12

$I = 1 + 1 = 1$

$E = ETT + 1 \qquad B = ETT + 1 = .423$

$B = .423 \neq 0$

$I = 1 \neq 0$

$TL = L2_h$

OUTPUT DATA
$TL = L2_h$

$IX = 13 \times K = 13 \times 1 = 13$

$IX = IX + 1 = 13 + 1 = 14$

$SN = S + IX \qquad SN = S + 14 = 21$

OUTPUT DATA BLOCK NO. 21
ETNSN or RM3 QUALIFIED FOR ADVANCEMENT TO ETN3 or RM2

$J = 0?$

YES

$PSN + J = 21 \qquad PSN = 21$

$PT1 + J = B \qquad PT1 = .423$

$J = J + 1 = 0 + 1 = 1$

$I = 1 \neq 12$

$I = I + 1 = 1 + 1 = 2$

$B = ETT + 1 \qquad B = ETT + 2 = .8404$

$B = .8404 \neq 0$

$I = 2 \neq 0 \neq 1$

$TL = L3_h$

OUTPUT DATA
$TL = L3_h$

$IX = 13 \times K = 13 \times 1 = 13$

$IX = IX + 1 = 13 + 2 = 15$

$SN = S + 15 \qquad SN = S + 15 = 22$

OUTPUT DATA BLOCK NO. 22
ETN3 or RM2 qualified for advancement to ETN2 or RM1 and has special training on equipment. Also can be performed by ETN2 or RM1 qualified for advancement to ET1 or RMC and training not required.

$J = 0?$

NO

$M = 0$

$A = PSN + M \qquad A = PSN = 21$

$A = SN? \qquad 21 \neq 22$

NO

$M = M + 1 = 0 + 1 = 1$

$M = J? \qquad I = 1$

YES

$PSN + J = SN \qquad PSN + 1 = 22$

$PT1 + J = B \qquad PT1 + 1 = .8404$

$J = J + 1 = 1 + 1 = 2$

$I = 2 \neq 12$

$I = I + 1 = 2 + 1 = 3$

$B = ETT + 1 \qquad B = ETT + 3 = 17.7118$

$B = 17.7118 \neq 0$

$I = 3 \neq 0 \neq 1 \neq 2$

$TL = IS1_h$

OUTPUT DATA
$TL = IS1_h$

$IX = 13 \times K = 13 \times 1 = 13$

$IX = IX + 1 = 13 + 3 = 16$

$SN = S + IX \qquad SN = S + 16 = 23$

OUTPUT DATA BLOCK NO. 23
ETN3 qualified for advancement to ETN2

$J = 0?$

NO

$M = 0$

$A = PSN + M \qquad A = PSN + 21$

$A = SN? \quad 21 \neq 23$

NO

$M = M + 1 = 0 + 1 = 1$

$M = J? \quad 1 \neq 2$

$A = PSN + M \qquad A = PSN + 1 = 22$

$A = SN? \quad 22 \neq 23$

$M = M + 1 = 1 + 1 = 2$

$M = J? \quad 2 = 2$

YES

$PSN + J = SN \qquad PSN + 2 = 23$

$PT1 + J = B \qquad PT1 + 2 = 17.7118$

$J = J + 1 = 2 + 1 = 3$

$I = 3 \neq 12$

$I = I + 1 = 3 + 1 = 4$

$B = ETT + 1 \qquad B = ETT + 4 = 0$

$B = 0?$

YES

$I = 4 \neq 12$

$I = I + 1 = 4 + 1 = 5$

$B = ETT + 1 \qquad B = ETT + 5 = 4.371$

$B = 4.371 \neq 0$

$I = 5 \neq 0 \neq 1 \neq 2 \neq 3 \neq 4$

$TL = A1_h$

OUTPUT DATA
$TL = A1_h$

$IX = 13 \times K = 13 \times 1 = 13$

$IX = IX + 1 = 13 + 5 = 18$

$SN = S + IX \qquad SN = S + 18 = 21$

OUTPUT DATA BLOCK NO. 21
ETNSN or RM3 qualified for advancement to ETN3 or RM2

$J = 0?$

NO

$M = 0$

$A = PSN + M \qquad A = PSN = 21$

$A = SN? \qquad 21 = 21$

YES

$A = PT1 + M \qquad A = PT1 = .423$

$A = A + B \qquad .423 + 4.371 = 4.794$

$PT1 = A \qquad PT1 = 4.794$

$I = 5 \neq 12$

$I = I + 1 = 5 + 1 = 6$

$B = ETT + 1 \qquad B = ETT + 6 = 1.2224$

$B = 1.2224 \neq 0$

$I = 6 \neq 0 \neq 1 \neq 2 \neq 3 \neq 4 \neq 5$

$TL = A2_h$

OUTPUT DATA
$TL = A2_h$

$IX = 13 \times K = 13 \times 1 = 13$

$IX = IX + 1 = 13 + 6 = 19$

$SN = S + IX \qquad SN = S + 19 = 22$

OUTPUT DATA BLOCK NO. 22
ETN3 or RM2 qualified for advancement to ETN2 or RM1 with special training on the equipment. Also can be performed by an ETN2 or RM1, qualified for advancement to ET1 or RMC and training not required.

$J = 0?$

NO

$M = 0$

$A = PSN + M \qquad A = PSN = 21$

$A = SN? \qquad 21 \neq 22$

NO

$M = M + 1 = 0 + 1 = 1$

$M = J? \qquad 1 \neq 3$

NO

$A = PSN + M \qquad A = PSN + 1 = 22$

$A = SN? \qquad 22 = 22$

YES

$A = PT1 + M \qquad A = AP1 + 1 = .8404$

$A = A + B \qquad .8404 + 1.2224 = 2.0628$

$PT1 + M = A \qquad PT1 + 1 = 2.0628$

$I = 6 \neq 12$

$I = 1 + 1 = 6 + 1 = 7$

$B = ETT + 1 \qquad B = ETT + 7 = 1.41$

$B = 1.41 \neq 0$

$I = 7 \neq 0 \neq 1 \neq 2 \neq 3 \neq 4 \neq 5 \neq 6$

$TL = 1N1_h$

OUTPUT DATA
$TL = 1N1_h$

$IX = 13 \times K = 13 \times 1 = 13$

$IX = IX + 1 = 13 + 7 = 20$

$SN = S + IX \qquad SN = S + 20 = 25$

OUTPUT DATA BLOCK NO. 25
ETNSN or RM3 with on-job-training

$J = 0?$

NO

$M = 0$

$A = PSN + M \qquad A = PSN = 21$

$A = SN? \qquad 21 \neq 25$

NO

$M = M + 1 = 0 + 1 = 1$

$M = J? \qquad 1 \neq 3$

NO

$A = PSN + M \qquad A = PSN + 1 = 22$

$A = SN? \qquad 22 \neq 25$

NO

$M = M + 1 = 1 + 1 = 2$

$M = J?$ $\quad 2 \neq 3$

NO

$A = PSN + M$ $\quad A = PSN + 2 = 23$

$A = SN?$ $\quad 23 \neq 25$

NO

$M = M + 1 = 2 + 1 = 3$

$M = J?$ $\quad 3 = 3$

YES

$PSN + J = SN$ $\quad PSN + 3 = 6$

$PTI + J = B$ $\quad PTI + 3 = 0$

$J = J + 1 = 3 + 1 = 4$

$I = 7 \neq 12$

$I = I = 1 = 7 + 1 = 8$

$B = ETT + 1$ $\quad B = ETT + 8 = 1.528$

$B = 1.528 \neq 0$

$I = 8 \neq 9 \neq 1 \neq 2 \neq 3 \neq 4 \neq 5 \neq 6 \neq 7$

$TL = IN2_h$

OUTPUT DATA
$TL = IN2_h$

$IX = 13 \times K = 13 \times 1 = 13$

$IX = IX + 1 = 13 + 8 = 21$

$SN = S + IX$ $\quad SN = S + 21 = 26$

OUTPUT DATA BLOCK NO. 26
ETNSN or RM2 qualified for advancement to ETN3 or RMI

$J = 0?$

NO

$M = 0$

$A = PSN + M$ $\quad A = PSN = 21$

$A = SN?$ $\quad 21 \neq 26$

NO

$M = M + 1 = 0 + 1 = 1$

$M = J?$ $\quad 1 \neq 4$

NO

$A = PSN + M$ $\quad A = PSN + 1 = 22$

$A = SN?$ $\quad 21 \neq 26$

NO

$M = M + 1 = 1 + 1 = 2$

$M = J?$ $\quad 2 \neq 4$

NO

$A = PSN + M$ $\quad A = PSN + 2 = 23$

$A = SN?$ $\quad 23 \neq 26$

NO

$M = M + 1 = 2 + 1 = 3$

$M = J?$ $\quad 3 \neq 4$

NO

$A = PSN + M$ $\quad A = PSN + 3 = 6$

$A = SN?$ $\quad 6 \neq 26$

NO

$M = M + 1 = 3 + 1 = 4$

$M = J?$ $\quad 4 = 4$

YES

PSN + J = SN PSN + 4 = 21

PTI + 4 = B PTI + 4 = 4.371

J = J + 1 = 4 + 1 = 5

I = 8 ≠ 12

I = I + 1 = 8 + 1 = 9

B = ETT + 1 B = ETT + 9 = .705

B = .705 ≠ 0

I = 9 ≠ 0 ≠ 1 ≠ 2 ≠ 3 ≠ 4 ≠ 5 ≠ 6 ≠ 7 ≠ 8

TL = $AL1_h$

OUTPUT DATA
TL = $AL1_h$

IX = 13 x K = 13 x 1 = 13

IX = IX + 1 = 13 + 9 = 22

SN = S + IX SN = S + 22 = 23

OUTPUT DATA BLOCK NO. 23
ETN3 qualified for advancement to ETN2

J = 0?

NO

M = 0

A = PSN + M A = PSN = 21

A = SN? 21 ≠ 23

M = M + 1 = 0 + 1 = 1

M = J? 1 ≠ 5

NO

A = PSN + M A = PSN + 1 = 22

A = SN? 22 ≠ 23

M = M + 1 = 1 + 1 = 2

M = J? 2 ≠ 5

NO

A = PSN + M A = PSN + 2 = 23

A = SN? 23 = 23

YES

A = PTI + M A = PTI + 2 = 17.7118

A = A + B = 17.7118 + .705 = 18.4168

PTI + M = A PTI + 2 = 18.4168

I = 9 ≠ 12

I = I + 1 = 9 + 1 = 10

B = ETT + 1 B = ETT + 10 = 0

B = 0?

YES

I = 10 ≠ 12

I = I + 1 = 10 + 1 = 11

B = ETT + 1 B = ETT + 11 = 2.115

B = 2.115 ≠ 0

I = 11 ≠ 0 ≠ 1 ≠ 2 ≠ 3 ≠ 4 ≠ 5 ≠ 6 ≠ 7 ≠ 8 ≠ 9 ≠ 10

TL = CI_h

OUTPUT DATA
TL = CI_h

IX = 13 x K = 13 x 1 = 13

IX = IX + 1 = 13 + 11 = 24

SN = S + IX SN = S + 24 = 5

OUTPUT DATA BLOCK NO. 5
ETNSN qualified for advancement to ETN3

J = 0?

NO

M = 0

A = PSN + M A = PSN = 21

A = SN? 21 ≠ 5

M = M + 1 = 0 + 1 = 1

M = J? 1 ≠ 5

A = PSN + M A = PSN + 1 = 22

A = SN? 22 ≠ 5

M = M + 1 = 1 + 1 = 2

M = J? 2 ≠ 5

A = PSN + M A = PSN + 2 = 23

A = SN? 23 ≠ 5

M = M + 1 = 2 + 1 = 3

M = J? 3 ≠ 5

A = PSN + M A = PSN + 3 = 6

A = SN? 6 ≠ 5

M + M + 1 = 3 + 1 = 4

M = J? 4 ≠ 5

A = PSN + M A = PSN + 4 = 21

A = SN? 21 ≠ 6

M = M + 1 = 4 + 1 = 5

M = J? 5 = 5

PSN + J = SN PSN + 4 = 21

PTI + J = B PTI + 4 = 2.115

J = J + 1 = 5 + 1 = 6

I = 12? I = 11 ≠ 12

I = I + 1 = 12

I = 12 ≠ 0 ≠ 1 ≠ 2 ≠ 3 ≠ 4 ≠ 5 ≠ 6 ≠ 7 ≠ 8 ≠ ≠ 9 ≠ 10 ≠ 11

TL = $C2_h$

OUTPUT DATA
TL = $C2_h$

IX = 13 x K = 13 x 1 = 13

IX = IX + 1 = 13 + 12 = 25

SN = S + IX SN = S + 25 = 6

OUTPUT DATA BLOCK NO. 6
ETN3 qualified for advancement to ETN2 and has specialized training on equipment or ETN2 qualified for advancement to ET1, training not required.

J = 0?

NO

M = 0

A = PSN + M A = PSN = 21

A = SN? 21 ≠ 6

M = M + 1 = 0 + 1 = 1

M = J? 1 ≠ 6

A = PSN + M A = PSN + 1 = 22

A = SN? 22 ≠ 6

M = M + 1 = 1 + 1 = 2

M = J? 2 ≠ 6

A = PSN + M A = PSN + 2 = 23

A = SN? 23 ≠ 6

M = M + 1 = 2 + 1 = 3

M = J? 3 ≠ 6

A = PSN + 3 A = PSN + 3 = 6

A = SN? 6 = 6

YES

A = PTI + M A = PTI + 3 = 1.528

I = 12?

YES

J = J - 1 = 6 - 1 = 5

OUTPUT HEADING
PERSONNEL REQUIREMENTS BY HOURS

SN = PSN + J A = PSN + 5 = 22

OUTPUT DATA BLOCK NO. 22
ETN3 or RM2 qualified for advancement to ETN2 or RM1 and has specialized training on equipment. Also can be performed by an ETN2 or RM1 qualified for advancement to ET1 or RMC and training not required.

OUTPUT DATA
PTI + J PTI + 5 = 0.9168

J = J - 1 = 5 - 1 = 4

J < 0?

NO

SN = PSN + J SN = PSN + 4 = 21

OUTPUT DATA BLOCK NO. 21
ETNSN or RM3 qualified for advancement to ETN3 or RM2

OUTPUT DATA
PTI + J PTI + 4 = 2.115

J = J - 1 = 4 - 1 = 3

J < 0?

NO

SN = PSN + J SN = PSN + 3 = 6

OUTPUT DATA BLOCK NO. 6
ETN3 qualified for advancement to ETN2 and has specialized training on equipment or ETN2 qualified for advancement to ET1 training not necessary

OUTPUT DATA
PTI + J PTI + 3 = 1.528

J = J - 1 = 3 - 1 = 2

J < 0?

NO

SN = PSN + J SN = PSN + 2 = 23

OUTPUT DATA BLOCK NO. 23
ETN3 qualified for advancement to ETN2

OUTPUT DATA
PTI + J PTI + 2 = 18.4168

J = J - 1 = 2 - 1 = 1

J < 0?

NO

SN = PSN + J SN = PSN = 22

OUTPUT DATA BLOCK NO. 22
ETN3 or RM3 qualified for advancement to ETN2 or RM1 and has specialized training on equipment. Also can be performed by an ETN2 or RM1 qualified for advancement to ET1 or RMC and training not required.

OUTPUT DATA
PTI + J PTI + 1 = 2.0628

J = J - 1 = 1 - 1 = 0

J < 0?

NO

SN = PSN + J SN = PSN = 21

OUTPUT DATA BLOCK NO. 21
ETNSN or RM3 qualified for advancement to ETN3 or RM2

OUTPUT DATA
PTI + J PTI = 4.794

J = J - 1 = 0 - 1 = -1

J < 0?

YES

RECS = 10 ≠ 0

OUTPUT HEADING
EQUIPMENT TYPE

K = 0?

NO

K = 1?

YES

OUTPUT HEADING
COMMUNICATIONS

OUTPUT HEADING
SPECIAL TRAINING REQUIREMENTS
LINE
COMPLEXITY
TMB
TRAINING REQUIREMENTS

REWIND TP2

READ FROM TP2
LINE
COMPX
M
TMB
R

RECS = RECS - 5 = 10 - 5 = 5

REWIND MCT

READ FROM MCT
CODE
SKILL

CODE = R?

YES

PRINT OUTPUT DATA
LINE
COMPLX
M
TMB
SKILL

RECS = 0?

NO

READ TP2
TRAINING REQUIREMENTS DATA
LINE
COMPLX
M
TMB
R

RECS = RECS - 5 = 5 - 5 = 0

REWIND MCT

READ FROM MCT
CODE
SKILL

```
CODE = R?

YES

PRINT OUTPUT DATA
     LINE
     COMPLX
     M
     TMB
     SKILL

RECS = 0?

YES



END
```

DATE 4/29/66

PROGRAMMER

John Doe

NOMENCLATURE

AN/XYZ-1

REPLACEMENT LEVEL

TMB BY TASK TYPES

	L1	L2	L3	IS1	IS2	A1	A2	IN1	IN2	AL1	AL 2	C1	C2	Disposition
Group 02A2A1		.423		3.807		4.371		1.41		.705		2.115		Bench
Group 2			.8404	13.9048			1.2224		15.28				.9168	Throw-away

EQUIPMENT FAILURE RATE

TMB TOTALS BY TASK TYPES

	L1	L2	L3	IS1	IS2	A1	A2	IN1	IN2	AL1	AL2	C1	C2
21.74	0	.423	.8404	17.7118	0	4.371	1.2224	1.41	1.528	.705	0	2.115	.9168

TMB BY SKILL LEVELS

Hours/1000 Hours for Skill Level A	Hours/1000 Hours for Skill Level B	Hours/1000 Hours for Skill Level C
7.896	22.507	.8404

Test Equipment Used

Standing Wave Indicator
Multimeter

OUTPUT FORMAT FOR DETAIL AND C PROCEDURE

Personnel Requirement

Required by

- LI
- L2 ETNSN or RM3 qualified for advancement to ETN3 or RM2
- L3 ETN3 or RM2 qualified for advancement to ETN2 or RMI and has special training on equipment. Also can be performed by ETN2 or RMI qualified for advancement to ETI or RMC and training not required.
- ISI ETN3 qualified for advancement to ETN2
- IS2
- AI ETNSN or RM3 qualified for advancement to ETN3 or RM2
- A2 ETN3 qualified for advancement to ETN2 or RMI with special training on the equipment. Also can be performed by ETN2 or RMI qualified for advancement to ETI or RMC and training not required.
- INI ETNS or RM3 with on-the-job training.
- IN2 ETNSN or RM2 qualified for advancement to ETN3 or RMI
- ALI ETN3 qualified for advancement to ETN2
- AL2
- CI ETNSN qualified for advancement to ETN3
- C2 ETN3 qualified for advancement to ETN2 and has special training on equipment or ETN2 qualified for advancement to ETI, training not required.

Equipment Type

COMMUNICATIONS

Special Training Requirements

Item Ident.	Complexity	TMB	Training Requirements
Grp. 2	L3	.8404	Complex Measurement Techniques-VSWR, Noise Figure Sensitivity, Selectivity.
	A2	1.2224	Interchange of Defective Items-Mechanical Parts (Gears, Cams, etc.)

2. DEMONSTRATION CHECK FOR PROCEDURE C. The mathematical model and flow charts for Procedure C were checked by comparing the solution of the model, and a desk check of the flow charts with the results of a manual application of the procedure. The input data for this demonstration is extracted from the description of the hypothetical communications equipment that was used for the example in the Procedural Instructions (Report No. ND 65-31).

The block diagram for the subject equipment is shown in Figure 6. The demonstration was performed by considering only assembly 3A3 (Speech Amplifier) and assembly 4A1 (Rectifier No. 1). These two equipment items are assumed to contain the high failure rate parts shown in Table 2.

2.1 Application of the Manual Procedure. The manual application of Procedure C was performed in accordance with the Procedural Instructions in Report No. ND 65-31. The worksheet prepared during this application is shown in Figure 7.

By definition, the minimum skill levels required for each task type are as follows:

L(1)	—	Skill Level A	A(2)	—	Skill Level B
L(2)	—	Skill Level B	IN(1)	—	Skill Level A
IS(1)	—	Skill Level B	IN(2)	—	Skill Level B
IS(2)	—	Skill Level C	C(1)	—	Skill Level A
A(1)	—	Skill Level A	C(2)	—	Skill Level B

Requirements for personnel of Skill Levels A, B, and C were determined as follows:

Skill Level A

Maintenance Task	Time Required Per 1000 Hours of Equipment Operation
$CMB_{L(1)}$	.0008
$CMB_{A(1)}$	.03162
$CMB_{IN(1)}$	.004
$CMB_{C(1)}$	.0064
	.04282 hours/1000 of equipment operation

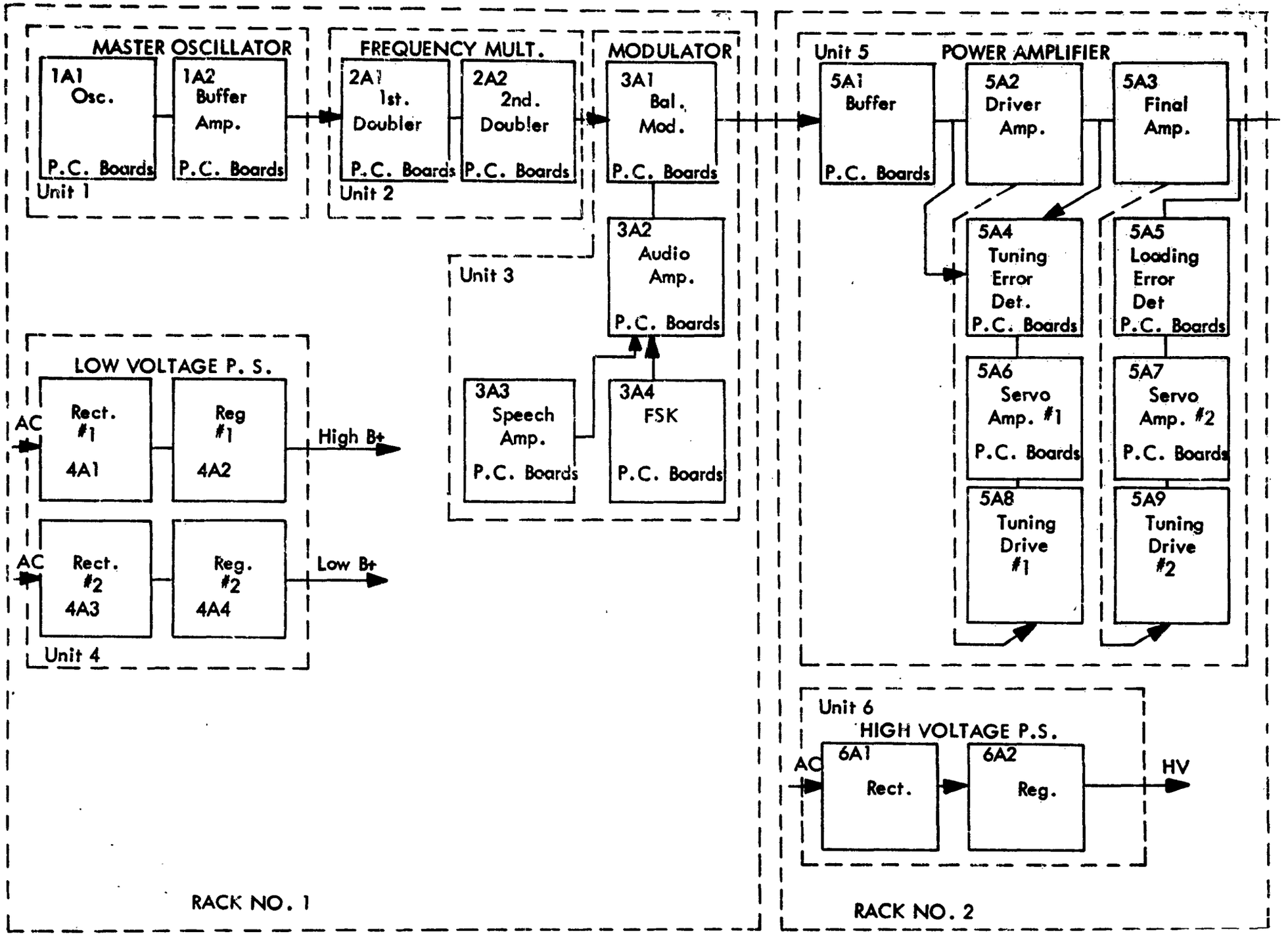
MASTER OSCILLATOR
1A1 Osc. P.C. Boards
1A2 Buffer Amp. P.C. Boards
Unit 1
FREQUENCY MULT.
2A1 1st. Doubler P.C. Boards
2A2 2nd. Doubler P.C. Boards
Unit 2
MODULATOR
3A1 Bal. Mod. P.C. Boards
3A2 Audio Amp. P.C. Boards
3A3 Speech Amp. P.C. Boards
3A4 FSK P.C. Boards
Unit 3
LOW VOLTAGE P. S.
AC
Rect. #1 4A1
Reg #1 4A2
High B+
AC
Rect. #2 4A3
Reg. #2 4A4
Low B+
Unit 4
RACK NO. 1
Unit 5
POWER AMPLIFIER
5A1 Buffer P.C. Boards
5A2 Driver Amp.
5A3 Final Amp.
5A4 Tuning Error Det. P.C. Boards
5A5 Loading Error Det P.C. Boards
5A6 Servo Amp. #1 P.C. Boards
5A7 Servo Amp. #2 P.C. Boards
5A8 Tuning Drive #1
5A9 Tuning Drive #2
Unit 6
HIGH VOLTAGE P.S.
AC
6A1 Rect.
6A2 Reg.
HV
RACK NO. 2

Table 2 Failure Rate Calculation

Replaceable Items	Part Category	Count	Failure Rate
Speech Amp.	Transistors	12	36
(P.C. Boards)	Diodes	4	4
			40
Rect. #1	Rec. Tubes	4	56
(Parts)	Relays	2	6
			62

CMB WORKSHEET

Equipment _____ Sheet 1 of 1

FUNCTIONAL BREAKDOWN (1) Group	(2) Unit	(3) Ass'y	(4) Subass'y	(5) Rep'l. Level		(6) Maintenance Features (A) LEVEL G	U	A	SA	ST	P	DECOMP 1	2	(7) ATT	(8) FAIL. RATE	(9) TASK MAINTENANCE BURDEN L(1)	L(2)	IS(1)	IS(2)	A(1)	A(2)	IN(1)	IN(2)	C(1)	C(2)
		SPEECH AMP. 3A3		Unit	L																				
				Ass'y	IS																				
				S'ass'y	A																				
				Parts	IN																				
					C																				
			P.C. BOARDS	Unit	L				X			1		.02	40	.80									
				Ass'y	IS									.00											
				S'ass'y	X A			X				1		.31						12.40					
				Parts	IN				X			1		.10								4.00			
					C				X			1		.16										6.40	
		RECT. #1 4A1		Unit	L			X					2	.07	62		4.34								
				Ass'y	IS					X		1		1.13				73.16							
				S'ass'y	A			X				1		0.31						19.22					
				Parts	X IN						X		2	0.20									12.40		
					C			X					2	0.15											9.30
				Unit	L																				
				Ass'y	IS																				
				S'ass'y	A																				
				Parts	IN																				
					C																				
				Unit	L																				
				Ass'y	IS																				
				S'ass'y	A																				
				Parts	IN																				
					C																				
				Unit	L																				
				Ass'y	IS																				
				S'ass'y	A																				
				Parts	IN																				
					C																				
				Unit	L																				
				Ass'y	IS																				
				S'ass'y	A																				
				Parts	IN																				
					C																				
												SUBTOTALS													
												TOTALS (CMB)				.80	4.34	73.16		31.62		4.00	12.40	6.40	9.30

FEX-144

Figure 7. Procedure C Worksheet

Skill Level B

Maintenance Task	Time Required Per 1000 Hours of Equipment Operation
$CMB_{L(2)}$	.00434
$CMB_{IS(1)}$	.07316
$CMB_{A(2)}$	0.00
$CMB_{IN(2)}$	.01240
$CMB_{C(2)}$	.0093
	.09920 hours/1000 hours of equipment operation

Skill Level C

Maintenance Task	Time Required Per 1000 Hours of Equipment Operation
$CMB_{IS(2)}$	None

From Appendix 4-2 of Report ND 65-31, repeated in Figure 8 for reference, it can be seen that maintenance tasks at Skill Level A could normally be performed by an ETNSN who has had appropriate on-the-job-training. Skill Level B tasks will require an ETNSN who is qualified for advancement to ETN3. Skill Level C tasks would normally require an ETN3 who is qualified for advancement to ETN2, and has received specialized training on the maintenance of the subject equipment.

Combining this with the CMB data reveals that primary corrective maintenance on the equipment under study would require maintenance personnel as follows:

Skill Level	Rating	Maintenance Hours Per 1000 Hours of Operation
A	ETNSN (with OJT)	0.043
B	ETNSN qualified for advancement to ETN3	0.099
C(None Required)	—	0.000
	Total	0.142

2.2 Solution of the Mathematical Model. The coded mathematical expressions for Procedure C were solved using the same input data as in the demonstration of the manual application. These expressions were solved as follows:

SKILL LEVEL	EQUIPMENT CATEGORY			SEE NOTE
	Radar	Communication	Sonar	
A	ETRSN	ETNSN	STSN	1
B	ETRSN	ETNSN	STSN	2
C	ETR3	ETN3	ST3	3

[1] Skill Level A tasks can be performed by a SN provided he meets the requirements for an identified striker in the respective rating, and receives appropriate on-the-job-training on the equipment.

[2] Skill Level B tasks can be performed by a SN who is qualified for advancement to 3rd Class in the respective rating.

[3] Skill Level C tasks can be performed by a 3rd Class Petty Officer who is qualified for advancement to 2nd Class, provided he receives specialized (Class C School) training on the respective equipment. Skill Level C tasks also can be performed by a 2nd Class Petty Officer who is qualified for advancement to 1st Class, in which case specialized training would not be required, or would be significantly reduced.

Figure 8 Qualifications of Electronics Maintenance Personnel by Skill Level

a. <u>Failure Rate Computation</u>

$$FRATE_i = [FAIL_i][HFR]$$

$$[FAIL_1] = [0, 0, 0, 0, 12, 4, 0, 0, 0, 0, 0, 0, 0]$$

$$[FAIL]_2 = [4, 0, 0, 0, 0, 0, 2, 0, 0, 0, 0, 0, 0]$$

$$[HFR] = \begin{bmatrix} 14.10 \\ 38.92 \\ 21.63 \\ 487.01 \\ 3.26 \\ 1.16 \\ 2.86 \\ 32.18 \\ 1.80 \\ 25.47 \\ 2.85 \\ 5.84 \\ 3.05 \end{bmatrix}$$

$$FRATE_1 = 12 \times 3.26 + 4 \times 1.16 = 43.76$$

$$FRATE_2 = 4 \times 14.10 + 2 \times 2.86 = 62.13$$

NOTE: These failure rates are slightly different than were calculated using the manual procedure because the average failure rate values were not rounded.

b. <u>Equipment Failure Rate</u>

$$EFR = \sum_{i=1}^{t} FRATE_i$$

$$EFR = 43.76 + 62.13 = 105.89$$

c. <u>Task Maintenance Burden</u>

$$[TMB]_i = [TT_i] \times (FRATE_i)$$

$[TT_i]$ = a 1 x 6 matrix of task times taken from $[ATT_{Ik}]_i$, such that

$$[TT_i] = [ATT_{Ik1}, \ldots ATT_{Ik6}]$$

For Line Item 1:

$TT_1 = ATT_{3,3,1} = 0.02$
$TT_2 = 0$
$TT_3 = 0$
$TT_4 = 0$
$TT_5 = 0$
$TT_6 = ATT_{4,3,3} = 0.31$
$TT_7 = 0$
$TT_8 = ATT_{3,3,4} = 0.10$
$TT_9 = 0$
$TT_{10} = 0$
$TT_{11} = 0$
$TT_{12} = ATT_{3,3,6} = 0.16$
$TT_{13} = 0$

For Line Item 2:

$TT_1 = 0$
$TT_2 = ATT_{4,1,1} = 0.07$
$TT_3 = 0$
$TT_4 = ATT_{2,1,2} = 1.18$
$TT_5 = 0$
$TT_6 = ATT_{4,1,3} = 0.31$
$TT_7 = 0$
$TT_8 = 0$
$TT_9 = ATT_{1,1,4} = 0.20$
$TT_{10} = 0$
$TT_{11} = 0$
$TT_{12} = 0$
$TT_{13} = ATT_{4,1,6} = 0.15$

$$[TMB]_1 = [0.02,0,0,0,0,0.31,0,0.10,0,0,0,0.16,0] \times (43.76)$$
$$= [0.88,0,0,0,0,13.57,0,4.38,0,0,0,7.00,0]$$

$$[TMB]_2 = [0,0.07,0,1.18,0,0.31,0,0,0.20,0,0,0.15] \times (62.13)$$
$$= [0,4.35,0,73.31,0,19.26,0,0,12.43,0,0,0,9.32]$$

d. CMB By Task Type

$$[CMB] = \sum_{i=1}^{t} TMB_i = [ETT_i]$$

$$[CMB] = [0.88, 4.35, 0, 73.31, 0, 32.83, 0, 4.38, 12.43, 0, 0, 7.00, 9.32]$$

e. Skill Level Analysis

$$HSKLA = ETT_1 + ETT_6 + ETT_8 + ETT_{12}$$
$$= 0.88 + 32.83 + 4.38 + 7.00 = 45.09$$

$$HSKLB = ETT_2 + ETT_4 + ETT_7 + ETT_9 + ETT_{13}$$
$$= 4.35 + 73.31 + 0 + 12.43 + 9.32 = 99.41$$

$$HSKLC = ETT_5 = 0$$

f. Personnel Requirements. Personnel Requirement statement numbers are obtained from S_{ij} where

$$i = \frac{ECAT - 1300}{10} = \frac{1320 - 1300}{10} = 2$$

Statement numbers and corresponding statements for each applicable task type code are listed in Table 3.

2.3 Demonstration Check Of Flow Chart. The System Flow Chart for Procedure C was checked using the same problem as was used to solve the mathematical model. An Input Data Sheet containing the appropriate input data is shown in Figure 9. The desk check in the following pages represents all of the actions that would be performed by a computer that was programmed according to the flow charts. This desk check proceeds from top to bottom on each page. A simulated printout of the output data is shown at the end of the desk check.

Table 3 Personnel Requirement Statements

i	SN	Statement
1	20	ETNSN or RMSN with on-the-job training
2	21	ETNSN or RM3 qualified for advancement to ETN3 or RM2
4	23	ETN3 qualified for advancement to ETN2
6	21	ETNSN or RM3 qualified for advancement to ETN3 or RM2
8	25	ETNSN or RM3 with on-the-job training
9	26	ETNSN or RM2 qualified for advancement to ETN3 or RM1
12	5	ETNSN qualified for advancement to ETN3
13	6	ETN3 qualified for advancement to ETN2, and has specialized training on equipment

INPUT DATA SHEET

PAGE ______ OF ______

A	NOMENCLATURE	EQUIP. Category
	AN/XYZ-1	13.2.9

B	ANALYST	Date Mo. day year
	JOHN DOE	04 29 66

C

ITEM IDENTIFICATION: EQUIPMENT	GROUP	UNIT	ASSEMBLY	SUBASSEMBLY	REPL. ITEM	HIGH FAILURE RATE PARTS COUNT: RECEIVING TUBES	SPECIAL PURPOSE & TRANS. TUBES	CRT TUBES	MAGNETRONS	TRANSISTORS	DIODES	RELAYS	VIBRATORS	SYNCHROS	RESOLVERS	BLOWERS	OTHER MOTORS	VACUUM CAP.	TASK TYPE AND COMPLEXITY: L1	L2	L3	IS1	IS2	A1	A2	IN1	IN2	AL1	AL2	C1	C2	TEST EQUIP. T1	T2	DISP. OF ITEM	SKILL KNOWLEDGE AND TRAINING REQUIREMENTS: R1	R2	R3	R4	R5	R6	LAST CARD
0	0	03	03	000	3	000	00	00	00	012	004	00	0	0	0	00	00	00	3	3	0	0	0	4	0	3	0	0	0	3	3	00	00	0	0000	0000	0000	0000	0000	00000	[illegible]
0	0	04	01	000	1	004	00	00	00	000	000	02	0	0	0	00	00	00	0	4	0	2	0	4	0	0	1	0	0	0	4	00	00	0	0000	0000	0000	0000	0000	00000	[illegible]
																					0							0	0			00	00	0	0000	0000	0000	0000	0000	00000	
																					0							0	0			00	00	0	0000	0000	0000	0000	0000	00000	
																					0							0	0			00	00	0	0000	0000	0000	0000	0000	00000	
																					0							0	0			00	00	0	0000	0000	0000	0000	0000	00000	
																					0							0	0			00	00	0	0000	0000	0000	0000	0000	00000	
																					0							0	0			00	00	0	0000	0000	0000	0000	0000	00000	
																					0							0	0			00	00	0	0000	0000	0000	0000	0000	00000	
																					0							0	0			00	00	0	0000	0000	0000	0000	0000	00000	
																					0							0	0			00	00	0	0000	0000	0000	0000	0000	00000	
																					0							0	0			00	00	0	0000	0000	0000	0000	0000	00000	
																					0							0	0			00	00	0	0000	0000	0000	0000	0000	00000	
																					0							0	0			00	00	0	0000	0000	0000	0000	0000	00000	

FIGURE 9 INPUT DATA SHEET
PROCEDURE C

DESK CHECK — PROCEDURE C

START

SET SWITCH FOR PROCEDURE C

REWIND TP1 TEST EQUIPMENT SCRATCH

REWIND TP2 SPECIAL TRAINING SCRATCH

SET K = 0

SET TP1 RECORD COUNT RECT = 0

SET TP2 RECORD COUNT RECS = 0

READ INPUT DATA

JOB IDENTIFICATION
PROGRAMMER
DATE

WRITE OUTPUT HEADING

JOB IDENTIFICATION
PROGRAMMER
DATE

WRITE OUTPUT DATA

JOB IDENTIFICATION
PROGRAMMER
DATE

DETAIL PROCEDURE ?

NO

C PROCEDURE ?

YES

SET A = 0

A → ETT + K THIS PUTS ZERO INTO ETT + K

A → TMB + K THIS PUTS ZERO INTO TMB + K

K = 12?

NO

K = K + 1

A→ETT + K (ETT + 1) THIS CYCLES UNTIL K = 12, SETTING

ETT + 0 = 0	TMB + 0 = 0
ETT + 1 = 0	TMB + 1 = 0
⋮	⋮
ETT + 12 = 0	TMB + 12 = 0

A→TMB + K (TMB + 1)

K = 12 ?

YES

SET EFR = 0

WRITE OUTPUT HEADING

EQUIPMENT IDENTIFICATION

LAST DATA CARD ?

NO

READ INPUT DATA

NOMENCLATURE, EQUIPMENT CATEGORY

WRITE OUTPUT DATA

EQUIPMENT NOMENCLATURE

WRITE OUTPUT HEADINGS - LINE ITEM INFORMATION

REWIND MCT MASTER CODE TAPE FOR SKILLS

LAST DATA ?

NO

READ INPUT DATA - LINE ITEM DATA

REPL I = 0?

NO

SET J = 0

SET FRATE = 0

FAIL + J→A THIS PUTS 0 INTO A

HFR + J→B THIS PUTS 14.10 INTO B

A = A x B = 0 x 14.10 = 0

FRATE = FRATE + A = 0 + 0 = 0

J = 12?

NO

FAIL + J → A (FAIL + I → A) THIS PUTS ZERO INTO A

HFR + J → B (HRF + I → B) THIS PUTS 38.92 INTO B

A = A × B = O × 38.92 = 0

FRATE = FRATE + A = 0 + 0

THIS CONTINUES UNTIL J = 4

FAIL + 4 → A (THIS PUTS 12 INTO A)

HFR + 4 → B (THIS PUTS 3.26 INTO B)

A = A × B = 12 × 3.26 = 39.12

FRATE = FRATE + A = 0 + 39.12 = 39.12

J = 12?

NO

UPDATE J = J + I = 4 + I = 5

FAIL + 5 → A (THIS PUTS 4 INTO A)

HFR + 5 → B (THIS PUTS 1.16 INTO B)

A = A × B = 4 × 1.16 = 4.64

FRATE FRATE + A = 39.12 + 4.64 = 43.76

THIS CONTINUES UNTIL J = 12, ALL REMAINING ARE ZERO

J = 12?

YES

EFR = EFR + FRATE = 0 + 43.76 = 43.76

LI = 0?

NO

SET I = 0

SET M = I

SET A = BLANK

A → TMB + I THIS PUTS A BLANK INTO TMB + I

SET FI = LI = 3

A→TMB + 2 THIS PUTS A BLANK INTO TMB+2

SET LOC = 0

A = FL - I = 3-I = 2

IX = 5 x A = 5 x 2 = 10

IX = IX + REPLI - I = 10+3 - I = 12

IX = IX+LOC = 12 + 0 = 12

ATT+ IX→A (ATT+12 →A) THIS PUTS 0.02 INTO A

A = A x FRATE = 0.02 x 43.76 = 0.8752

A→TMB +I (A →TMB +0) THIS PUTS 0.8752 INTO TMB+0

ETT + I→ B (ETT+ 0 →B) THIS PUTS ZERO INTO B

B→A+ B = 0.8752+0 =0.8752

B→ETT + I (B→ ETT+0) THIS PUTS 0.8752 INTO ETT+0

I = II ?

NO

LOC > 0?

NO

RI = 0?

YES

ISI = 0?

YES

SET A = BLANK

A→TMB + 3 THIS PUTS A BLANK INTO TMB+3

IS2 = 0

YES

SET I = 4

SET LOC = 35

A→TMB + 4 THIS PUTS A BLANK INTO TMB+4

I = 11?

NO

LOC > 0?

YES

LOC > 35?

NO

R2 = 0 ?

YES

AI = 0?

NO

SET I = 5

SET M = 1

FL = AI = 4

SET A = BLANK

A→TMB + 6 THIS PUTS A BLANK INTO TMB+6

SET LOC = 70

A = FL - I = 4-1 = 3

IX = S X A = 5 x 3 = 15

IX = IX + REPL I-1 = 15+3-1 = 17

IX = IX+LOC = 17+70 = 87

ATT + IX →A (ATT+87→A) THIS PUTS 0.31 INTO A

A = AxFRATE = 0.31 x 43.76 = 13.5656

A→TMB+1 (A →TMB + 5) THIS PUTS 13.5656 INTO TMB+5

ETT + 1→B (ETT+5 →B) THIS PUTS 0 INTO B

B = A+ B = 13.5656 + 0 = 13.5656

B→ETT+1 (B→ETT + 5) THIS PUTS 13.5656 INTO ETT+5

I = 11?

NO

LOC > 0?

YES

LOC > 35?

YES

LOC > 70?

NO

R3 = 0?

YES

IN1 = 0?

NO

SET I = 7

M = 1

FL = IN1 = 3

SET A = BLANK

A TMB + 8 THIS PUTS BLANK INTO TMB + 8

SET LOC = 105

A = FL-1 = 3-1 = 2

IX = SXA = 5 x 2 = 10

IX = IX + REPLI - 1 = 10 + 3-1 = 12

IX = IX + LOC = 12 + 105 = 117

ATT + IX → A (ATT + 117 → A) THIS PUTS 0.10 INTO A

A = A X FRATE = 0.10 x 43.76 = 4.376

A = TMB + I (A → TMB + 7) THIS PUTS 4.00 INTO TMB + 7

ETT + I → B (ETT + 7 → B) THIS PUTS 0 INTO B

B = A + B = 4.376+0 = 4.376

B → ETT + I (B → ETT + 7) THIS PUTS 4.376 INTO ETT +7

I = 11?

NO

LOC > 0?

YES

LOC > 35?

YES

LOC > 70?

YES

LOC > 105?

NO

R4 = 0?

YES

AL1 = 0

YES

SET A = BLANK

A → TMB + 9 THIS PUTS A BLANK INTO TMB + 9

AL 2 = 0?

YES

SET I = 10

SET LOC = 140

A → TMB + 10 THIS PUTS A BLANK INTO TMB + 10

I = 11?

NO

LOC > 0?

YES

LOC > 35?

YES

LOC>70?

YES

LOC>105?

YES

LOC>140?

NO

R5 = 0?

YES

C1 = 0?

NO

SET I = 11

SET M = 1

FL = CI = 3

SET A = BLANK

A→TMB + 12 THIS PUTS A BLANK INTO TMB + 12

SET LOC = 175

A = FL-1 = 3-1 = 2

IX = 5 x A = 5 x 2 = 10

IX = IX + REPL I-1 = 10 + 3-1 = 12

IX = IX + LOC = 12 + 175 = 187

ATT + IX→A (ATT + 187→A) THIS PUTS 0.16 INTO A.

A = AXFRATE = 0.16 x 43.76 = 7.0016

A→TMB + I (A→TMB + 11) THIS PUTS 7.0016 INTO TMB+11

ETT + I→B (ETT + 11→B) THIS PUTS 0 INTO ETT + 11

B = A + B = 7.0016 + 0 = 7.0016

B→ETT + I (B→ETT + 11) THIS PUTS 7.0016 INTO ETT+11

i = 11?

YES

R6 = 0?

YES

GRP = 0?

YES

SET GRP = BLANK

SET GRPH = BLANK

UNIT = 0?

NO

SET UNITH = UNIT

ASSY = 0?

NO

SET ASSYH = ASSY

SASSY = 0?

YES

SET HOL = A_h

DISP = 0?

YES

SET DISPH = BLANK

SET DISP = BLANK

WRITE OUTPUT DATA

```
UNIH   3
HOL    A
ASSYH  3
L1  = 0.8752
A1  = 13.5656
IN1 = 4.376
C1  = 7.0016
```

TI = 0?

YES

LAST DATA?

NO

READ INPUT DATA - LINE ITEM DATA

REPLI = 0?

NO

SET J = 0

SET FRATE = 0

FAIL + J → A (FAIL → A) THIS PUTS 4 INTO A

HFR + J → B (HFR → B) THIS PUTS 14.10 INTO B

A = A x B = 4 x 14.10 = 56.40

FRATE = FRATE + A = 0 + 56.40 = 56.40

J = 12?

NO

UPDATE J = J + 1

FAIL + J's ALL EQUAL TO ZERO UNTIL J = 6

FAIL + 6 → A THIS PUTS 2 INTO A

HFR + 6 → B THIS PUTS 3.26 INTO B

A = A x B = 3.26 x 2 = 6.52

FRATE = FRATE + A = 56.40 + 6.52 = 62.92

REMAINING FAIL + J's = 0

J = 12?

YES

EFR = EFR + FRATE = 43.76 + 62.92 = 106.68

LI = 0?

YES

SET TMB = BLANK

L2 = 0?

NO

SET I = 1

SET M = 2

SET FL = L2 = 4

SET A = BLANK

A → TMB + 2 THIS PUTS A BLANK INTO TMB + 2

SET LOC = 0

A = FL-1 = 4-1 = 3

IX = 5XA = 5 x 3 = 15

IX = IX + REPLI - 1 = 15 + 1-1 = 15

IX = IX + LOC = 15 + 0 = 15

ATT + IX → A (ATT + 15 → A) THIS PUTS 0.07 INTO A

A = AXFRATE = 0.07 x 62.92 = 4.4044

A → TMB + I (A → TMB + 1) THIS PUTS 4.4044 INTO TMB+I

ETT + I → B (ETT + 1 → B) THIS PUTS 0 INTO B

B = A+B = 4.4044+0 = 4.4044

B → ETT + I (B → ETT + 1) THIS PUTS 4.4044 INTO ETT+I

I = 11?

NO

LOC > 0?

NO

RI = 0?

YES

iS1 = 0?

NO

SET I=3

SET M=1

FL = IS1 = 2

SET A = BLANK

A→TMB + 4 THIS PUTS A BLANK INTO TMB + 4

SET LOC = 35

A = FL-1 = 2-1 = 1

IX = SXA = 5 x 1 = 5

IX = IX + REPLI - 1 = 5 + 1 - 1 = 5

IX = IX + LOC = 5 + 35 = 40

ATT + IX→A (ATT + 40 →A) THIS PUTS 1.18 INTO A

A = AXFRATE = 1.18 x 62.92 = 74.2456

A→TMB + I (A→ TMB + 3) THIS PUTS 74.2456 INTO TMB+3

ETT + I →B (ETT + 3→B) THIS PUTS 0 INTO B

B = A + B = 74.2456+0 = 74.2456

B→ ETT + I (B→ ETT +3) THIS PUTS 74.2456 INTO ETT+3

I = 11?

NO

LOC>0?

YES

LOC>35?

NO

R2 = 0?

YES

A1 = 0?

NO

SET I = 5

SET M = 1

FL = A1 = 4

SET A = BLANK

A → TMB + 6 THIS PUTS A BLANK INTO TMB + 6

SET LOC = 70

A = FL - 1 = 4-1 = 3

IX = 5XA = 5 x 3 = 15

IX = IX + REPLI - 1 = 15 + 1 - 1 = 15

IX = IX + LOC = 15 + 70 = 85

ATT + IX → A (ATT + 85 → A) THIS PUTS 0.31 INTO A

A = AXFRATE = 0.31 x 62.92 = 19.5052

A → TMB + I (A → TMB + 5) THIS PUTS 19.5052 INTO TMB + 5

ETT + I → B (ETT + 5 → B) THIS PUTS 13.5656 INTO B

B = A + B = 19.5052 + 13.5656 = 33.0708

B → ETT + I (B → ETT + 5) THIS PUTS 33.0708 INTO ETT + 5

I = 11?

NO

LOC = 0?

YES

LOC > 35?

YES

LOC > 10?

NO

R3 = 0

YES

INI = 0?

YES

SET A = BLANK

A → TMB + 7 THIS PUTS A BLANK INTO TMB + 7

IN2 = 0?

NO

SET I = 8

M=2

FL = IN2 = 1

SET LOC = 105

A = FL-1 = 1-1 = 0

IX = 5XA = 5 × 0 = 0

IX = IX + REPLI -1 = 0 + 1-1 = 0 + 0 = 0

IX = IX + LOC = 0 + 105 = 105

ATT + IX → A(ATT + 105 → A) THIS PUTS 0.20 INTO A

A = AXFRATE = 0.20 × 62.92 = 12.5840

A → TMB + I (A → TMB + 8) THIS PUTS 12.5840 INTO TMB + 8

ETT + I → B (ETT + 8 → B) THIS PUTS 0 INTO ETT + 8

B = A + B = 12.5840 + 0 = 12.5840

B → ETT + I (B → ETT + 8) THIS PUTS 12.5840 INTO ETT + 8

I = 11?

NO

LOC > 0?

YES

LOC > 35?

YES

LOC > 70?

YES

NO

R4 = 0?

YES

AL1 = 0?

YES

SET A = BLANK

A → TMB + 9 THIS PUTS A BLANK INTO TMB + 9

AL2 = 0?

YES

SET I = 10

SET LOC = 140

A → TMB + 10 THIS PUTS A BLANK INTO TMB + 10

I = 11?

NO

LOC > 0?

YES

LOC > 35?

YES

LOC > 70?

YES

LOC 105?

YES

LOC > 140?

NO

R5 = 0?

YES

C1 = 0?

YES

SET A = BLANK

A → TMB + 11 THIS PUTS A BLANK INTO TMB + 11

C2 = 0?

NO

SET I = 12

SET M = 2

FL = C2 = 4

SET LOC = 175

A = FL-1 = 4-1 = 3

IX = 5XA = 5 x 3 = 15

IX = IX + REPLI -1 = 15 + 1-1 = 15

IX = IX + LOC = 15 + 175 = 190

ATT + IX → A(ATT + 190 → A) THIS PUTS 0.15 INTO A

A = AXFRATE = 0.15 x 62.92 = 9.4380

A → TMB + I (A → TMB + 12) THIS PUTS 9.4380 INTO TMB + I2

ETT + I → B (ETT + 12 → B) THIS PUTS ZERO INTO B

B = A + B = 9.4380 + 0 = 9.4380

B → ETT + I (B → ETT + 12) THIS PUTS 9.4380 INTO ETT + I2

I = 11?

YES

R6 = 0?

YES

GRP = 0?

YES

SET GRP = BLANK

SET GRPH = BLANK

UNIT = 0?

NO

SET UNITH = UNIT

ASSY = 0?

NO

SET ASSYH = ASSY

SASSY = 0?

YES

SET HOL = A_h

DISP = 0?

YES

SET DISPH = BLANK

SET DISP = BLANK

PRINT OUTPUT DATA

UNITH	4
HOL	A
ASSYH	1
L2	4.4044
IS1	74.2456
A1	19.5052
IN2	12.5840
C2	9.4380

T1 = 0?

YES

T2 = 0?

YES

LAST DATA ?

YES

PRINT OUTPUT HEADING

EQUIPMENT FAILURE RATE = 106.68

TMB TOTALS BY TASK TYPES

L1	0.8752
L2	4.4044
L3	0
IS1	74.2456
IS2	0
A1	33.0708
A2	0
IN1	4.376
IN2	12.5840
AL1	0
AL2	0
C1	7.0016
C2	9.4380

ETT + 5→A THIS PUTS 33.0708 INTO A

A = A + ETT = 33.0708 + 0.8752 = 33.9460

ETT + 7→B THIS PUTS 4.376 INTO B

A = A + B = 33.9460 + 4.376 = 38.3220

ETT + 11→B THIS PUTS 7.0016 INTO B

SKLVA = A + B = 38.3220 + 7.0016 = 45.3236

ETT + 1→A THIS PUTS 4.4044 INTO A

ETT + 3→B THIS PUTS 74.2456 INTO B

A = A + B = 4.4044 + 74.2456 = 78.6500

ETT + 6→B THIS PUTS 0 INTO B

A = A + B = 78.6500 + 0 = 78.6500

ETT + 8→B THIS PUTS 12.5840 INTO B

A = A + B = 78.6500 + 12.5840 = 91.2340

ETT + 12→B THIS PUTS 9.4380 INTO B

SKLVB = A + B = 91.2340 + 9.4380 = 100.6720

ETT + 4→A THIS PUTS 0 INTO A

C PROCEDURE?

YES

SET SKLVC = A = 0

PRINT OUTPUT HEADING

TMB BY SKILL LEVELS

Hours/1000 Hours Skill Level A	45.3236
Hours/1000 Hours Skill Level B	100.6720
Hours/1000 Hours Skill Level C	0

RECT = 0?

YES

SET CON = 1310

SET K = 0

ECAT = CON?

YES

B PROCEDURE ?

NO

SET J = 0

SET A = 0

A→PSN + J (A←PSN + 0) THIS PUTS ZERO INTO PSN

A←PTI + J (A →PTI + 0) THIS PUTS ZERO INTO PTI

J = 24?

NO

J = J+1

CONTINUE THIS UNTIL

PSN	=	0	PTI	=	0
PSN + 1	=	0	PTI + 1	=	0
PSN ÷ 24	=	0	PTN + 24	=	0

J = 24?

YES

SET J = 0

SET I = 0

PRINT OUTPUT HEADING

INFORMATION ABOUT PERSONNEL REQUIREMENTS

PERSONNEL REQUIREMENTS BY HOURS

ETT + I → B (ETT + 0 → B) THIS PUTS 0.80 INTO B

B = 0?

NO

I = 0?

YES

SET TL = $L1_h$

PRINT OUTPUT HEADING

L1

IX = 13 x K = 13 x 1 = 13

IX = IX + I = 13 + 0 = 13

S + IX → SN (S + 13 → SN) THIS PICKS OUT STATEMENT # 20

PRINT

ETNSN or RMSN with on-the-job-training

J=0?

YES

SN → PSN + J THIS PUTS 20 INTO PSN

B → PTI + J THIS PUTS 0.8752 INTO PTI

J = J + 1 = 0 + 1 = 1

I = 12?

NO

I = I + 1 = 0 + 1 = 1

ETT + I → B (ETT + 1 → B) THIS PUTS 4.4044 INTO B

B = 0?

NO

I = 0?

NO

I = 1?

YES

SET TL = $L2_h$

PRINT OUTPUT HEADING

L2

IX = 13 X K = 13 x 1 = 13

IX - IX + 1 = 13 + 1 = 14

S + IX→SN (S + 14→SN) THIS PICKS OUT STATEMENT # 21

PRINT

ETNSN or RM3 qualified for advancement to ETN3 or RM2

J=0?

NO

SET M = 0

PSM + M→A (PSN→A) THIS PUTS 20 INTO A

A = SN?

NO

M = M+1 = 0 + 1 = 1

M = J?

YES

SN→PSN + J (SN→PSN + 1) THIS PUTS 21 INTO PSN + 1

B→PTI + J (B→PTI + 1) THIS PUTS 4.4044 INTO PTI+I

J = J + 1 = 1 + 1 = 2

I = 12?

NO

I = I + 1 = 1 + 1 = 2

ETT + 1 →B (ETT + 2→B) THIS PUTS ZERO INTO B

B = 0?

YES

I = 12?

NO

I = I + 1 = 2 + 1 = 3

ETT + 1 → B (ETT +3 → B) THIS PUTS 74.2456 INTO B

B = 0?

NO

I = 0 ?

NO

I = 1?

NO

I = 2?

NO

I = 3?

YES

SET TL = $IS1_h$

PRINT OUTPUT HEADING

IS1

IX = 13 X K = 13 X 1 = 13

IX = IX + I = 13 + 3 = 16

S + IX SN THIS PICKS OUT STATEMENT #23

PRINT

ETN3 qualified for advancement to ETN2

J = 0?

NO

SET M = 0

PSN + M → A (PSN → A) THIS PUTS 20 INTO A

A = SN?

NO

M = M + 1 = 0 + 1 = 1

M = J?

NO

PSN + M → A (PSN + 1 → A) THIS PUTS 21 INTO A

A = SN?

NO

M = M + 1 = 1 + 1 = 2

M = J?

YES

SN → PSN + J (SN → PSN + 2) THIS PUTS 23 INTO PSN + 2

B → PTI + J (B → PTI + 2) THIS PUTS 74.2456 INTO PTI + 2

J = J + 1 = 2 + 1 = 3

I = 12?

NO

I = I + 1 = 3 + 1 = 4

ETT + I → B (ETT + 4 → B) THIS PUTS ZERO INTO B

B = 0?

YES

I = 12?

NO

I = I + 1 = 4 + 1 = 5

ETT + I → B (ETT + 5 B) THIS PUTS 33.0708 INTO B

B = 0?

NO

I = 0?

NO

I = 1?

NO

I = 2?

NO

I = 3?

NO

I = 4?

NO

I = 5?

YES

SET TL = $A1_h$

PRINT OUTPUT HEADING

A1

IX = 13 X K = 13 X 1 = 13

IX = IX + I = 13 + 5 = 18

S + IX→SN (S + 18→SN) THIS PICKS OUT STATEMENT #21

PRINT

ETNSN or RM3 qualified for advancement to ETN3 or RM2

J = 0?

NO

SET M = 0

PSN + M→A (PSN→A) THIS PUTS 20 INTO A

A = SN?

NO

M = M + 1 = 0 + 1 = 1

M = J?

NO

PSN + M→A (PSN + 1→ A) THIS PUTS 21 INTO A

A = SN?

NO

M = M + 1 = 1 + 1 = 2

M = J?

NO

PSN + M →A (PSN + 2→A) THIS PUTS 23 INTO A

A = SN?

NO

M = M + 1 = 2 + 1 = 3

M = J?

YES

SN→PSN + J (SN→PSN + 3) THIS PUTS 25 INTO PSN + 3

B→PTI + J (B→PTI + 3) THIS PUTS 33.0708 INTO PTI + 3

J = J + 1 = 3 + 1 = 4

I = 12?

NO

I = I + 1 = 5 + 1 = 6

ETT + I→B (ETT + 6→B) THIS PUTS ZERO INTO B

B = 0?

YES

I = 12?

NO

I = I + 1 = 6 + 1 = 7

ETT + B → (ETT + 7 → B) THIS PUTS 4.376 INTO B

B = 0?

NO

I = 0?

NO

I = 1?

NO

I = 2?

NO

I = 3?

NO

I = 4?

NO

I = 5?

NO

I = 6?

NO

I = 7?

YES

SET TL = INI_h

PRINT OUTPUT HEADING
INI

IX = 13 X K = 13 x 1 = 13

IX = IX + I = 13 + 7 = 20

S + IX → SN (S + 20 → SN) THIS PICKS OUT STATEMENT #25

ETNSN or RM3 with on-the-job training

J = 0?

NO

SET M = 0

PSN + M → A (PSN → A) THIS PUTS 20 INTO A

A = SN?

NO

M = M + 1 = 0 + 1 = 1

M = J?

NO

PSN + M → A(PSN + 1 → A) THIS PUTS 21 INTO A

A = SN?

NO

M = M + 1 = 1 + 1 = 2

M = J?

NO

PSN + M → A (PSN + 2 → A) THIS PUTS 23 INTO A

A = SN?

NO

M = M + 1 = 2 + 1 = 3

M = J?

NO

PSN + M → A (PSN + 3 → A) THIS PUTS 25 INTO A

A = SN?

YES

PTI + M → A(PTI + 3 → A) THIS PUTS 33.0708 INTO A

A = A + B = 33.0708 + 4.376 = 37.4468

A → PTI + M (A → PTI + 3) THIS PUTS 37.4468 INTO PTI + 3

I = 12?

NO

I = I + 1 = 7 + 1 = 8

ETT + I → B (ETT + 8 → B) THIS PUTS 12.5840 INTO B

B = 0 ?

NO

I = 0?

NO

I = 1?

NO

I = 2?

NO

I = 3?

NO

I = 4?

NO

I = 5?

NO

I = 6?

NO

I = 7?

NO

I = 8?

YES

SET TL = $IN2_h$

PRINT OUTPUT HEADING

IN2

IX = 13 X K = 13 X 1 = 13

IX = IX + I = 13 + 8 = 21

S + IX → SN (S + 21 → SN) THIS PICKS OUT STATEMENT #26

PRINT

ETNSN or RM2 qualified for advancement to ETN3 or RM1

J = 0?

NO

SET M = 0

PSN + M → A (PSN → A) THIS PUTS 20 INTO A

A = SN?

NO

M = M + 1 = 0 + 1

M = J?

NO

PSN + M → A (PSN + 1 → A) THIS PUTS 21 INTO A

A = SN?

NO

M = M + 1 = 1 + 1 = 2

M = J?

NO

PSN + M → A(PSN + 2 → A) THIS PUTS 23 INTO A

A = SN?

NO

M = M + 1 = 2 + 1 = 3

M = J?

NO

PSN + M → A (PSN + 3 → A) THIS PUTS 25 INTO A

A = SN?

NO

M = M + 1 = 3 + 1 = 4

M = J?

YES

SN → PSN + J (SN → PSN + 4) THIS PUTS 26 INTO PSN + 4

B → PTI + J (B → PTI + 4) THIS PUTS 12.5840 INTO PTI + 4

J = J + 1 = 4 + 1 = 5

I = 12?

NO

I = I + 1 = 8 + 1 = 9

ETT + I → B (ETT + 9 → B) THIS PUTS ZERO INTO B

B = 0?

YES

I = 12?

NO

I = I + 1 = 9 + 1 = 10

ETT + I → B (ETT + 10 → B) THIS PUTS ZERO INTO B

B = 0?

YES

I = 12?

NO

I = I + 1 = 10 + 1 = 11

ETT + I → B (ETT + 11 → B) THIS PUTS 7.0016 INTO B

B = 0?

NO

I = 0?

NO

I = 1?

NO

I = 2?

NO

I = 3?

NO

I = 4?

NO

I = 5?

NO

I = 6?

NO

I = 7?
NO
I = 8?

NO

I = 9?

NO

I - !0?

NO

I = 11?

YES

SET TL = $C1_h$

PRINT OUTPUT HEADING

C1

IX = 13 X K = 13 X 1 = 13

IX = IX + 1 = 13 + 11 = 24

S + IX → SN (S + 24 → SN) THIS PICKS OUT STATEMENT # 5

PRINT

ETNSN qualified for advancement to ETN3

J = 0?

NO

SET M = 0

PSN + M → A(PSN → A) THIS PUTS 20 INTO A

A = SN?

NO

M = M + 1 = 0 + 1

M = J?

NO

PSN + M → A(PSN + 1 → A) THIS PUTS 21 INTO A

A = SN?

NO

M = M + 1 = 1 + 1 = 2

M = J?

NO

PSN + M → A(PSN + 2 → A) THIS PUTS 23 INTO A

A = SN?

NO

M = M + 1 = 2 + 1 = 3

M = J.'?

NO

PSN + M → A(PSN + 3 → A) THIS PUTS 25 INTO A

A = SN?

NO

M = M + 1 = 3 + 1 = 4

M = J?

NO

PSN + M → A (PSN + 4 → A) THIS PUTS 26 INTO A

A = SN?

NO

M = M + 1 = 4 + 1 = 5

M = J?

YES

SN → PSN + J (SN → PSN + 5) THIS PUTS 5 INTO PSN + 5

B → PTI + J (B → PTI + 5) THIS PUTS 7.0016 INTO PTI + 5

J = J + 1 = 5 + 1 = 6

I = 12?

NO

I = I + 1 = 11 + 1 = 12

ETT + I → B(ETT + 12 → B) THIS PUTS 9.4380 INTO B

B = 0?

NO

I = 0?

NO

.
.
.

I = 11?

NO

SET TL = $C2_h$

PRINT OUTPUT HEADING

C2

IX = 13 X K = 13 X 1 = 13

IX = IX + 1 = 13 + 12 = 25

S + IX → SN (S + 25 → SN) THIS PICKS OUT STATEMENT #26

PRINT

ETN3 qualified for advancement to ETN2 and has specialized training on the equipment.

J = 0?

NO

SET M = 0

PSN + M → A (PSN + 1 → A) THIS PUTS 21 INTO A

A = SN?

NO

M = M + 1 = 1 + 1 = 2

M = J?

NO

PSN + M → A (PSN + 2 → A) THIS PUTS 23 INTO A

A = SN?

NO

M = M + 1 = 2 + 1 = 3

M = J?

NO

PSN + M → A(PSN + 3 → A) THIS PUTS 25 INTO A

A = SN?

NO

M = M + 1 = 3 + 1 = 4

M = J?

NO

PSN + M→A (PSN + 4) THIS PUTS 25 INTO A

A = SN?

NO

M = J?

NO

PSN + M→A (PSN + 5→A) THIS PUTS 5 INTO A

A = SN?

NO

M = M + 1 = 5 + 1 = 6

M = J?

YES

SN→PSN + J (SN→PSN + 6) THIS PUTS 29 INTO PSN + 6

B →PTI + J (B →PTI + 6) THIS PUTS 9.4380 INTO PTI + 6

J = J + 1 = 6 + 1 = 7

I = 12?

YES

J = J - 1 = 7 - 1 = 6

PRINT OUTPUT HEADING

PERSONNEL REQUIREMENT
REQUIRED BY TASK

ETN3 qualified for advancement to ETN2	9.4380
ETNSN qualified for advancement to ETN3	7.0016
ETNSN or RM2 qualified for advancement to ETN3 or RM1	12.5840
ETNSN or RM3 with OJT	37.4468
ETN3 qualified for advancement to ETN2	74.2456
ETNSN or RM3 qualified for advancement to ETN3 or RM2	4.4044
ETNSN or RMSN with OJT	0.8752

J - J - 1 = 0 - 1 = -1

J < 0?

YES

RECS = 0?

YES

END

OUTPUT FORMAT FOR DETAIL AND C PROCEDURE

DATE
4/29/66

PROGRAMMER
John Doe

Nomenclature
AN/XYZ-1 C

Replacement Level

TMB By Task Types

		L1	L2	L3	IS1	IS2	A1	A2	IN1	IN2	AL1	AL2	C1	C2	Disposition
3A3	3	0.8752	0	0	0	0	13.5656	0	4.376	0	0	0	7.0016	0	
4A1	1	0	4.4044	0	74.2456	0	19.5052	0	0	12.5840	0	0	0	9.4380	

Equipment Failure Rate

106.68

TMB Totals by Task Type

L1	L2	L3	IS1	IS2	A1	A2	IN1	IN2	AL1	AL2	C1	C2
0.8752	4.4044	0	74.2456	0	33.0708	0	4.376	12.5840	0	0	7.0016	9.4380

TMB By Skill Levels

Hours/1000 Hours for Skill Level A	Hours/1000 Hours for Skill Level B	Hours/1000 Hours for Skill Level C
0.0453236	0.1006720	0.0

Test Equipment Used

Personnel Requirement
Required by:

L1 ETNSN or RMSN with on-the-job training
L2 ETNSN or RM 3 qualified for advancement to ETN3 or RM2
L3
IS1 ETN3 qualified for advancement to ETN2

IS2
A1 ETNSN or RM3 qualified for advancement to ETN3 or RM2
A2
IN1 ETNSN or RM3 with on-the-job training
IN2 ETNSN or RM 2 qualified for advancement to ETN3 or RM1
AL1
AL2
C1 ETNSN qualified for advancement to ETN3
C2 ETN3 qualified for advancement to ETN2 and has specialized training on the equipment

Equipment Type

Special Training Requirements

Line	Complexity	TMB	Training Requirements

3. DEMONSTRATION CHECK FOR PROCEDURE B. The mathematical model and flow charts for Procedure B were checked by comparing the solution of the model, and a desk check of the flow charts with the results of a manual application of the procedure. The input data for this demonstration is extracted from the hypothetical equipment that was used for the example in the Procedural Instructions (Report No. ND 65-31).

The subject equipment is described as follows:

The equipment will be rack-mounted in two racks with slide out drawers in each. One rack will contain the Master Oscillator, Frequency Multiplier, and Modulator drawers which will contain subchassis on which plug-in printed circuit boards will be mounted. These boards will be replaced in performing repairs. The High Voltage Power Supply (HVPS) and the Power Amplifier (PA) drawers in the second rack will contain individually mounted parts that will be replaced in performing repairs.

Localization features will be as follows:

Appropriate direct-reading meters will be provided on the HVPS and PA drawers to indicate the overall operation of associated circuitry. Each board in the other drawers will contain fault sensor circuit which will cause an appropriate lamp to light in the event of a failure in the associated circuit.

Isolation features will be as follows:

Test points will be provided at the input and output of each stage in the HVPS and PA drawers.

A preliminary reliability analysis indicates that the equipment failure rate will be not more than 4.8 failures per 1000 hours of equipment operation.

The PA will employ a new and unique method of RF amplification not previously used in Navy equipments.

New concepts in integrated solid-state circuitry will be used extensively in other sections of the equipment.

The PA will include an automatic, thermostatically controlled water cooling system. The PA will also contain a hydraulic servo operated autotune system.

3.1 Application of the Manual Procedure. The manual application of Procedure B used for this demonstration was extracted directly from the application example in Report No. ND 65-31. This application is repeated here beginning with the functional diagram (see Figure 10).

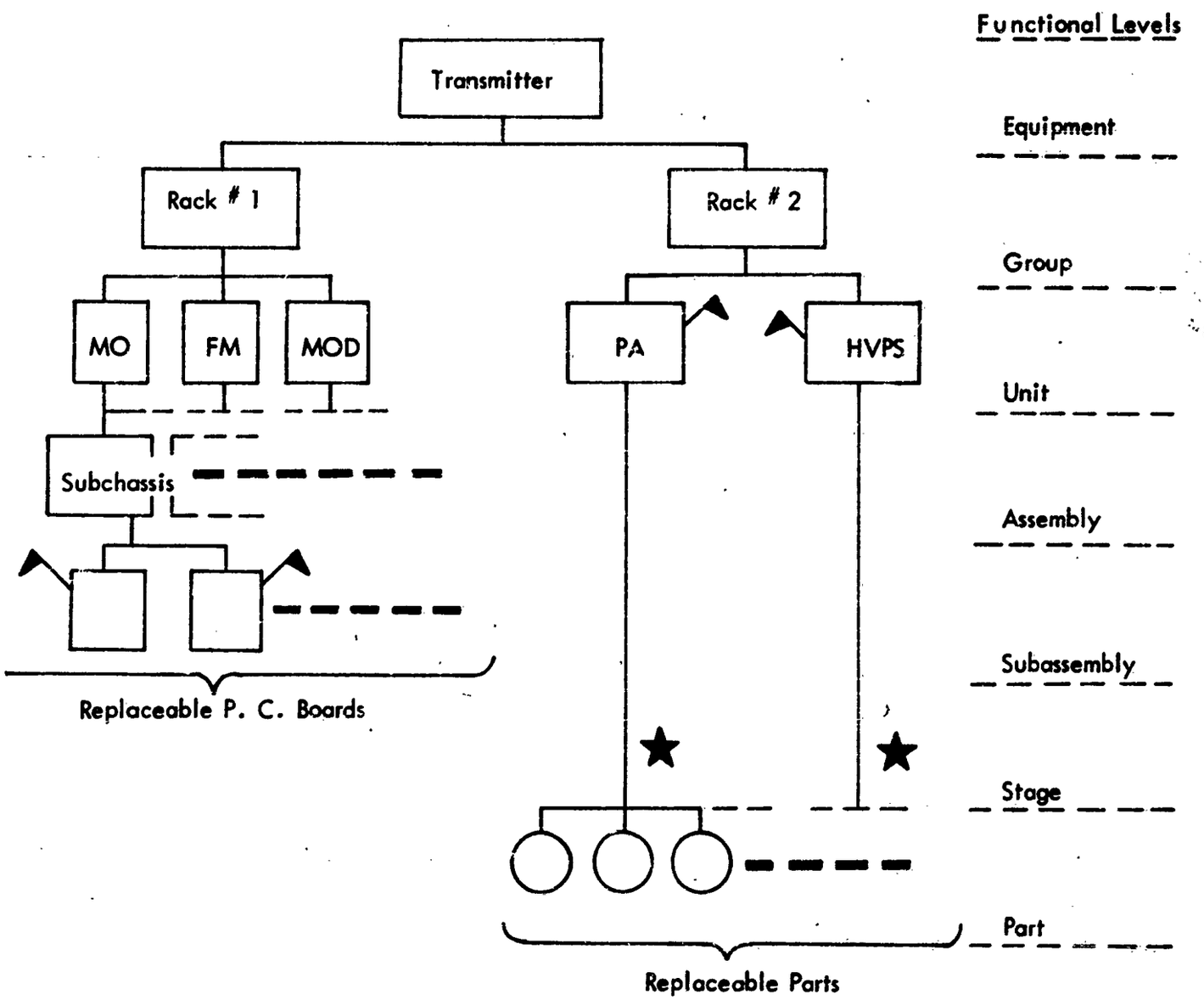

Figure 10. Functional Diagram For Procedure B

All maintenance in Rack #1 is performed by replacing subassemblies with localization effective to the subassembly level and, with isolation not applicable. All maintenance in Rack #2 is performed by replacing parts with localization effective to the unit level and isolation effective to the stage level.

The maintenance plans used in the transmitter, and corresponding MTTR values as determined from Appendix 2-1 of Report No. ND 65-31 are as follows:

Major Subdivision	Replaceable Item	Localization Level	Isolation Level	Maintenance Plan	MTTR (Hours)
Rack #1	Subassembly	Subassembly	N/A	22	0.5
Rack #2	Part	Unit	Stage	36	1.8

The predicted equipment failure rate for this equipment is given as 4.8 failures per 1000 hours. Since no other information is available, this is considered to be divided between Rack #1 and Rack #2, so that:

$$\text{Rack \#1} = \text{Rack \#2} = \frac{4.8 \text{ failures/1000 hours}}{2} = 2.4 \text{ failures/1000 Hours}$$

Repair Time For Rack #1.

0.5 hours/failure x 2.4 failures/1000 hours = 1.20 hours/1000 hours.

Repair Time For Rack #2.

1.8 hours/failure x 2.4 failures/1000 hours = 4.32 hours/1000 hours.

Factors Influencing Skill Level Requirements

The HVPS and PA (Rack #2) will use analog indicators. Go-no-go indicators will be used in other sections of the equipment (Rack #1).

The PA (Rack #2) will use a new RF amplification techniques. Rack #1 will include new integrated solid-state circuitry techniques.

Skill Level Percentages, obtained from Appendix 2-2 of Report No. ND 65-31, are:

Equipment Subdivision	Maintenance Plan	Failure Indicator	Advance In State-of-the-Art	Non-Electronic Maintenance	Skill Level Percentages A	B	C
Rack #1	22	Go-No-Go	Yes	No	100%	-	-
Rack #2	36	Analog	Yes	Yes	-	34%	66%

Skill Level Requirements are calculated as follows:

Rack #1: 1.20 hours/1000 hours x 1.00 = 1.20 hours/1000 hours Skill Level A

Rack #2: 4.32 hours/1000 hours x 0.34 = 1.47 hours/1000 hours Skill Level B

4.32 hours/1000 hours x 0.66 = 2.85 hours/1000 hours Skill Level C

Appendix 4-2 of Report No. ND 65-31 indicates that maintenance tasks at Skill Level A could normally be performed by an ETNSN who has had appropriate on-the-job-training. Skill Level B tasks will require an ETNSN who is qualified for advancement to ETN3. Skill Level C tasks would normally require an ETN3 who is qualified for advancement to ETN2 and has received specialized training on the maintenance of the subject equipment.

Combining this with the CMB data reveals that primary corrective maintenance on the transmitter equipment under study would require maintenance personnel as follows:

Skill Level	Rating	Maintenance Hours/1000 of Operation
A	ETNSN(with OJT)	1.20
B	ETNSN qualified for advancement to ETN3	1.47
C	ETN3 qualified for advancement to ETN2, and has received specialized training on the equipment.	2.85
	Total	5.45

3.2 Solution of the Mathematical Model. The coded mathematical expressions for Procedure B were solved using the same input data as in the demonstration of the manual application. These expressions were solved as follows:

a. Equipment Failure Rate. The appropriate value was taken directly from the input data without conversion. Therefore:

Equipment Failure Rate = 4.8 failures/1000 hours.

b. Major Subdivision Failure Rate.

$$\frac{\text{Equipment Failure Rate}}{\text{Number of Subdivisions}} = \frac{4.8}{2} = 2.4 \text{ failures/1000 hours.}$$

c. MTTR.

A value of MTTR for each major subdivision was selected from $MTTR_{lkj}$, (See Matrix 3).

For Rack #1

$MTTR_{3,0,3} = 0.5$

For Rack #2

$MTTR_{5,2,1} = 1.8$

d. Skill Level Percentages.

A maintenance profile was selected from $MAPRO_{mpn}$. See Matrix 5 for each major subdivision.

For Rack #1

$m = MP_{3,0,3}$ from MP_{lkj} (See Matrix 4)

$m = 11$

$p = NEM + (FI-1)(2)$
$NEM = 1,\ FI = 1$

$p = 1 + (1-1)(2) = 1$

$n = 2$

$MAPRO_{11,1,2} = 100,0,0$

For Rack #2

$m = MP_{5,2,1} = 16$

$p = NEM + (FI-1)(2)$
$NEM = 2,\ FI = 2$

$p = 2 + (2-1)(2) = 4$

$n = 2$

$MAPRO_{16,4,2} = 0,34,66$

e. CMB By Skill Level.

Solving the expression:

$RT_i = (MTTR_i)(\text{Failure Rate}_i)$

i = Major subdivision number$_i$

For Rack #1

$RT_1 = 0.5 \times 2.4 = 1.2$

For Rack #2

$RT_2 = 1.8 \times 2.4 = 4.3$

$SKL = (.01) \left[MAPRO\right]$

For Rack #1

$\left[SKL\right] = (.01) \left[100,0,0\right] = \left[1,0,0\right]$

For Rack #2

$\left[SKL\right] = (.01) \left[0,34,66\right] = \left[0,34, .66\right]$

$\left[HSKL\right]_i = RT_i \left[SKL\right]_i$

For Rack #1

$\left[HSKL\right]_1 = 1.2 \left[1,0,0\right] = \left[1.2, 0, 0\right]$

For Rack #2

$\left[HSKL\right]_2 = 4.3 \left[0, .34, .66\right] = \left[0,1.5, 2.8\right]$

$\left[THSKL\right] = \left[1.2 + 0, 0 + 1.5, 0 + 2.8\right] = \left[1.2, 1.5, 2.8\right]$

f. Personnel Requirements.

Personnel requirement statement numbers are obtained from $\left[SB_{ij}\right]$ (see Matrix 7).

$$i = \frac{1320 - 1300}{10} = 2$$

j = Skill Levels A, B, and C

Skill Level A.

$SB_{2,A}$ = (ETNSN with on-the-job-training)

Skill Level B.

$SB_{2,B}$ = (ETNSN qualified for advancement to ETN3)

Skill Level C.

$SB_{2,C}$ = (ETN3 qualified for advancement to ETN2 and has had specialized training on equipment)

3.3 Demonstration Check Of Flow Chart. The System Flow Chart for Procedure B was checked using the same problem as was used to solve the mathematical model. An Input Data Sheet containing the appropriate input data is shown in Figure 11. The desk check in the following pages represents all of the actions that would be performed by a computer that was programmed according to the flow charts. A simulated printout of the output data is shown at the end of the desk check.

INPUT DATA SHEET

PAGE ____ OF ____

	NOMENCLATURE	SUM EQUIP. MAJOR SBDVS.	EQUIPMENT FAILURE RATE	EQUIPMENT MEAN TIME BETWEEN FAILURE	EQUIP. CAT.
A	AN/BYZ	2	4.8		1320

	ANALYST	DATE mo. day year
B	JOHN DOE	04 29 66

C	ITEM IDENT.	MAINT. FEATURES					
	MAJOR SUBDIVISIONS	REPL. ITEM	LOCALIZATION LEVEL	ISOLATION LEVEL	FAILURE INDICATION	ADV. IN STATE-OF-ART	NON-ELECTRONIC MAINT.
	1	3	3	0	1	2	1
	2	1	5	2	2	2	2

LAST CARD 0 1

FIGURE 11 INPUT DATA SHEET
PROCEDURE B

DESK CHECK - PROCEDURE B

START

SET SWITCH FOR PROCEDURE B

REWIND TP1

REWIND TP2

SET K = 0

SET TP1 RECORD COUNT RECT = 0

SET TP2 RECORD COUNT RECS = 0

INPUT DATA - READ JOB IDENTIFICATION (PROGRAMMER AND DATE)

PRINT OUTPUT HEADINGS - JOB IDENTIFICATION

PRINT OUTPUT DATA - JOB IDENTIFICATION

DETAIL PROCEDURE?

NO

C PROCEDURE?

NO

B PROCEDURE?

YES

SET THSKLA = 0

SET THSKLB = 0

SET THSKLC = 0

LAST DATA CARD?

NO

READ INPUT DATA - EQUIPMENT IDENTIFICATION

PRINT OUTPUT HEADING
EQUIPMENT NOMENCLATURE

PRINT OUTPUT DATA
EQUIPMENT NOMENCLATURE

PRINT OUTPUT HEAD - MAJOR SUBDIVISION
HOUR/1000 HOUR FOR SKILL LEVEL A
HOUR/1000 HOUR FOR SKILL LEVEL B
HOUR/1000 HOUR FOR SKILL LEVEL C

EFR = 0?

NO

MESFR = EFR ÷ TEMSD = 4.8/2 = 2.4

LAST DATA CARD?

NO

READ INPUT DATA - LINE ITEM DATA

REPLI = 1 ?

NO

REPLI = 3?

YES

SET LOC = 49

IX = LOCL - 1 = 3 - 1 = 2

IX = 7 x IX = 7 x 2 = 14

IX = IC + ISOL = 14 + 0 = 14

IX = IX + LOC = 14 + 49 = 63

MP + IX A . (MP + 63 A) THIS PUTS 11 INTO A

MTTR + IX B (MTTR + 73 B) THIS PUTS 0.5 INTO B

RT = B x MESFR = 0.5 x 2.4 = 1.2

NOF = FI - 1 = 1 - 1 = 0

NOF = 2 x NOF = 2 x 0 = 0

NOF = NOF + NEM = 0 + 1 = 1

IX = ADV - 1 = 2 - 1 = 1

IX = 264 x IX = 264 x 1 = 264

IY = A - 1 = 11 - 1 = 10

IY = 12 x IY = 12 x 10 = 120

IY = IY + IX = 120 + 264 = 384

IX = NOF = 1 - 1 - 1 = 0

IX = 3 x IX = 3 x 0 = 0

IX = IX + IY = 0 + 384 = 384

MAPRO + IX A (MAPRO + 384 A) THIS PUTS 100 INTO A

SKLVA = A/100 = 100/100 = 1.00

IX = IX + 1 = 384 + 1 = 385

MAPRO + IX A (MAPRO + 385 A) THIS PUTS 0 INTO A

SKLVB = A/100 = 0/100 = 0

IX = IX + 1 = 385 + 1 = 386

MAPRO + IX A (MAPRO + 386 A) THIS PUTS 0 INTO A

SKLVC = A/100 = 0/100 = 0

HSKLA = SKLVA x RT = 2.00 x 1.2 = 1.2

HSKLB = SKLVB x RT = 0 x 1.2 = 0

HSKLC = SKLVC x RT = 0 x 1.2 = 0

THSKLA = THSKLA + HSKLA = 0 + 1.20 = 1.20

THSKLB = THSKLB + HSKLB = 0 + 0 = 0

THSKLC = THSKLC + HSKLC = 0 + 0 = 0

PRINT OUTPUT DATA
    EMSD
    HSKLA
    HSKLB
    HSKLC

LAST DATA CARD?

NO

READ INPUT DATA - LINE ITEM DATA

REPLI = 1 ?

YES

SET LOC = 0

IX = LOCL - 1 = 5 - 1 = 4

IX = 7 x IX = 7 x 4 = 28

IX = IX + ISP: = 28 + 2 = 30

IX = IX + LOC = 30 + 0 = 30

MP + IX A (MP + 30 A) THIS PUTS 16 INTO A

MTTR + IX B (MTTR + 30 B) THIS PUTS 1.8 INTO B

RT = B x MESFR = 1.8 x 2.4 = 4.32

NOF = FI-1 = 2 - 1 = 1

NOF = 2 x NOF = 2 x 1 = 2

NOF = NOF + NEM = 2 + 2 = 4

IX = ADV - 1 = 2 - 1 = 1

IX = 264 x IX = 264 x 1 = 264

IY = 16 - 1 = 15

IY = 12 x IY = 12 x 15 = 180

IY = IY + IX = 180 + 264 = 444

IX = NOF - 1 = 4 - 1 = 3

IX = 3 x IX = 3 x 3 = 9

IX = IX + IY = 9 + 444 = 453

MAPRO + IX A (MAPRO + 453 A) THIS PUTS 0 INTO A

SKLVA = A/100 = 0/100 = 0

IX = IX + 1 = 12 + 1 = 13

MAPRO + IX A (MAPRO + 454 A) THIS PUTS 34 INTO A

SKLVB = A/100 = 34/100 = .34

IX = IX + 1 = 13 + 1 = 14

MAPRO + IX A (MAPRO + 455 A) THIS PUTS 66 INTO A

SKLVC = A/100 = 66/100 = .66

HSKLVA = SKLVA x RT = 0 x 4.32 = 0

HSKLB = SKLVB x RT = .34 x 4.32 = 1.47

HSKLC = SKLVC x RT = .66 x 4.32 = 2.85

THSKLA = THSKLA + HSKLA = 1.20 + 0 = 1.20

THSKLB = THSKLB + HSKLB = 0 + 1.47 = 1.47

THSKLC = THSKLC + HSKLC = 0 + 2.85 = 2.85

PRINT OUTPUT DATA

EMSD	1	2
HSKLA	1.2	0.
HSKLB	0	1.47
HSKLC	0	2.85

LAST DATA CARD?

YES

PRINT OUTPUT HEADING

TMB BY SKILL LEVELS

HOURS/1000 SKILL LEVEL A	1.2
HOURS/1000 SKILL LEVEL B	1.47
HOURS/1000 SKILL LEVEL C	2.85

PRINT OUTPUT DATA FOR HEADINGS ABOVE

SET CON = 1310

SET K = 0

ECAT = CON?

NO

K = 4?

NO

K = K + 1 = 0 + 1 = 1

CON = CON + 10 = 1310 + 10 = 1320

ECAT = CON?

YES

B PROCEDURE?

YES

THSKLA = 0?

NO

PRINT OUTPUT HEADING
SKILL LEVEL A REQUIRES

IX = 3 x K = 3 x 1 = 3

IX = IX + 65 = 68

S + IX SN (S + 68 SN) THIS PICKS OUT STATEMENT #4

PRINT
"ETNSN WITH OJT"

THSKLB = 0?

NO

PRINT OUTPUT HEADING
SKILL LEVEL B REQUIRES

IX = IX + 1 = 68 + 1 = 69

S + IX SN (THIS PICKS OUT STATEMENT #5

PRINT
"ETNSN QUALIFIED FOR ADVANCEMENT TO ETN3"

THSKLC = 0?

NO

PRINT OUTPUT HEADING

SKILL LEVEL C REQUIRES

IX = IX + 1 = 69 + 1 = 70

S + IX SN THIS PICKS OUT STATEMENT # 6

```
PRINT
        "ETN3 QUALIFIED FOR ADVANCEMENT TO
         ETN2 AND HAS SPECIALIZED TRAINING
         ON EQUIPMENT OR ETN2 QUALIFIED FOR
         ADVANCEMENT TO ET1, TRAINING NOT
         NECESSARY."

RECS = 0?

YES



END
```

OUTPUT FORMAT FOR B PROCEDURE

DATE 4/15/66

PROGRAMMER

NOMENCLATURE AN/BYZ

MAJOR SUBDIVISION	HRS/1000 HRS. SKILL LEVEL A	HRS/1000 HRS. SKILL LEVEL B	HRS/1000 HRS. SKILL LEVEL C
1	1.2	ø	ø
2	ø	1.47	2.85

TOTAL HRS/1000 HRS. SKILL LEVEL A	TOTAL HRS/100 HRS. SKILL LEVEL B	TOTAL HRS/100 HRS. SKILL LEVEL C
1.2	1.47	2.85

PERSONNEL FOR SKILL LEVEL A REQUIRE

ETNSN with on-the-job training

PERSONNEL FOR SKILL LEVEL B REQUIRE

ETNSN qualified for advancement to ETN3

PERSONNEL FOR SKILL LEVEL C REQUIRE

ETN3 qualified for advancement to ETN2 and has specialized training on equipment or ETN2 qualified for advancement to ETI, training not necessary.

Unclassified

Security Classification

DOCUMENT CONTROL DATA - R&D

(Security classification of title, body of abstract and indexing annotation must be entered when the overall report is classified)

1. ORIGINATING ACTIVITY *(Corporate author)*
FEDERAL ELECTRIC CORPORATION
Industrial Park
Paramus, New Jersey 07652

2a. REPORT SECURITY CLASSIFICATION
Unclassified

2b. GROUP

3. REPORT TITLE SYSTEMS ANALYSIS PROCEDURES FOR ADP APPLICATION OF THE CORRECTIVE MAINTENANCE BURDEN PREDICTION PROCEDURES
VOLUME I STUDY REPORT

4. DESCRIPTIVE NOTES *(Type of report and inclusive dates)*
Final Report

5. AUTHOR(S) *(Last name, first name, initial)*
Dickerson, Tully J. Mathis, John V.
Smith, Sylvester T. Butler, Charles

6. REPORT DATE
June 1966

7a. TOTAL NO. OF PAGES
213

7b. NO. OF REFS
9

8a. CONTRACT OR GRANT NO.
NONR 3821(00)

b. PROJECT NO.
Amendment No. 6

c.

d.

9a. ORIGINATOR'S REPORT NUMBER(S)
PTB 66-8

9b. OTHER REPORT NO(S) *(Any other numbers that may be assigned this report)*

10. AVAILABILITY/LIMITATION NOTICES
Distribution of this document is unlimited

11. SUPPLEMENTARY NOTES Procedures developed are in Volume II of this report. Background material is in Report Nos. ND64-34, ND 65-31, ND65-35 and ND 65-36

12. SPONSORING MILITARY ACTIVITY
New Developments Research Branch
Personnel Research Division
Bureau of Naval Personnel-Arlington Navy Annex
Washington, D. C. 20370

13. ABSTRACT

This report presents the results of a study program to develop system analysis techniques for automatic data processing (ADP) application of the Corrective Maintenance Burden (CMB) Prediction Procedures. The work described represents Phase IV of a continuing program to develop maintenance manpower requirements prediction methodologies. (U)

This report describes the work performed in analyzing the prediction procedures to determine those steps that are conducive to automatic data processing, developing input data coding formats, developing appropriately coded mathematical expressions, and developing detailed system flow diagrams. The diagrams developed, which are presented in Volume II of this report, are presented in a universally understood format, and use coding techniques and notations that are readily translated into any of several of the popular computer languages. (U)

DD FORM 1 JAN 64 1473

Unclassified

Security Classification

Unclassified
Security Classification

14. KEY WORDS	LINK A ROLE	LINK A WT	LINK B ROLE	LINK B WT	LINK C ROLE	LINK C WT
CORRECTIVE MAINTENANCE BURDEN						
MAINTENANCE MANPOWER						
PREDICTION						
MAINTAINABILITY						
PROGRAMMING						
AUTOMATIC DATA PROCESSING						
MAINTENANCE SKILL AND KNOWLEDGE						

INSTRUCTIONS

1. ORIGINATING ACTIVITY: Enter the name and address of the contractor, subcontractor, grantee, Department of Defense activity or other organization *(corporate author)* issuing the report.

2a. REPORT SECURITY CLASSIFICATION: Enter the overall security classification of the report. Indicate whether "Restricted Data" is included. Marking is to be in accordance with appropriate security regulations.

2b. GROUP: Automatic downgrading is specified in DoD Directive 5200.10 and Armed Forces Industrial Manual. Enter the group number. Also, when applicable, show that optional markings have been used for Group 3 and Group 4 as authorized.

3. REPORT TITLE: Enter the complete report title in all capital letters. Titles in all cases should be unclassified. If a meaningful title cannot be selected without classification, show title classification in all capitals in parenthesis immediately following the title.

4. DESCRIPTIVE NOTES: If appropriate, enter the type of report, e.g., interim, progress, summary, annual, or final. Give the inclusive dates when a specific reporting period is covered.

5. AUTHOR(S): Enter the name(s) of author(s) as shown on or in the report. Enter last name, first name, middle initial. If military, show rank and branch of service. The name of the principal author is an absolute minimum requirement.

6. REPORT DATE: Enter the date of the report as day, month, year; or month, year. If more than one date appears on the report, use date of publication.

7a. TOTAL NUMBER OF PAGES: The total page count should follow normal pagination procedures, i.e., enter the number of pages containing information.

7b. NUMBER OF REFERENCES: Enter the total number of references cited in the report.

8a. CONTRACT OR GRANT NUMBER: If appropriate, enter the applicable number of the contract or grant under which the report was written.

8b, 8c, & 8d. PROJECT NUMBER: Enter the appropriate military department identification, such as project number, subproject number, system numbers, task number, etc.

9a. ORIGINATOR'S REPORT NUMBER(S): Enter the official report number by which the document will be identified and controlled by the originating activity. This number must be unique to this report.

9b. OTHER REPORT NUMBER(S): If the report has been assigned any other report numbers *(either by the originator or by the sponsor)*, also enter this number(s).

10. AVAILABILITY/LIMITATION NOTICES: Enter any limitations on further dissemination of the report, other than those imposed by security classification, using standard statements such as:

(1) "Qualified requesters may obtain copies of this report from DDC."

(2) "Foreign announcement and dissemination of this report by DDC is not authorized."

(3) "U. S. Government agencies may obtain copies of this report directly from DDC. Other qualified DDC users shall request through _____."

(4) "U. S. military agencies may obtain copies of this report directly from DDC. Other qualified users shall request through _____."

(5) "All distribution of this report is controlled. Qualified DDC users shall request through _____."

If the report has been furnished to the Office of Technical Services, Department of Commerce, for sale to the public, indicate this fact and enter the price, if known.

11. SUPPLEMENTARY NOTES: Use for additional explanatory notes.

12. SPONSORING MILITARY ACTIVITY: Enter the name of the departmental project office or laboratory sponsoring *(paying for)* the research and development. Include address.

13. ABSTRACT: Enter an abstract giving a brief and factual summary of the document indicative of the report, even though it may also appear elsewhere in the body of the technical report. If additional space is required, a continuation sheet shall be attached.

It is highly desirable that the abstract of classified reports be unclassified. Each paragraph of the abstract shall end with an indication of the military security classification of the information in the paragraph, represented as *(TS)*, *(S)*, *(C)*, or *(U)*.

There is no limitation on the length of the abstract. However, the suggested length is from 150 to 225 words.

14. KEY WORDS: Key words are technically meaningful terms or short phrases that characterize a report and may be used as index entries for cataloging the report. Key words must be selected so that no security classification is required. Identifiers, such as equipment model designation, trade name, military project code name, geographic location, may be used as key words but will be followed by an indication of technical context. The assignment of links, roles, and weights is optional.

Unclassified
Security Classification