LR-118

# DAVIDSON LABORATORY

CLEARINGHOUSE
FEDERAL SCIENTIFIC AND
TECHNICAL INFORMATION
Hardcopy | Microfiche
$ .65 | 30 pp
ARCHIVE COPY

LETTER REPORT 1181

STEVENS INSTITUTE OF TECHNOLOGY
CASTLE POINT STATION
HOBOKEN, NEW JERSEY

## POWER GENERATING CHARACTERISTICS OF SAVONIUS ROTORS

by

John A. Mercier

DDC
DEC 12 1966

November 1966

BEST
AVAILABLE COPY

STEVENS INSTITUTE OF TECHNOLOGY
DAVIDSON LABORATORY
CASTLE POINT STATION
HOBOKEN, NEW JERSEY

DAVIDSON LABORATORY
Letter Report 1181

November 1966

# POWER GENERATING CHARACTERISTICS OF SAVONIUS ROTORS

by

John A. Mercier

Prepared for the
Office of Naval Research
Contract Nonr 263(68)
Partially funded by ARPA
Order No. 299, Amendment #2
(DL Project 3063/978)

Reproduction in whole or in part is permitted for any purpose of the United States Government.

Application for copies may be made to the Defense Documentation Center, Cameron Station, 5010 Duke Street, Alexandria, Virginia 22314.

Distribution of this document is unlimited

Approved
S. Tsakonas

S. Tsakonas, Chief
Fluid Dynamics Division

iii + 13 pages
10 figures

## TABLE OF CONTENTS

ABSTRACT..... iii

INTRODUCTION..... 1

MODELS AND APPARATUS..... 2

TEST PROCEDURE AND PROGRAMS..... 4

RESULTS..... 5

DISCUSSION..... 9

CONCLUSIONS..... 11

RECOMMENDATIONS..... 12

REFERENCES..... 13

FIGURES (1-10)

## ABSTRACT

An experimental study of the power generating characteristics of Savonius rotors towed through still water was made. Variations in rotor geometry were investigated. Power absorption, drag and side force were measured on six rotors tested in the towing tank over a range of ratios of rotor vane tip peripheral speed divided by rotor advance speed from the free-running to the locked rotor conditions.

Results indicate that the Savonius rotor is not as effective at extracting the available power from a stream of moving water of a given cross-section area as a conventional propeller type windmill.

KEYWORDS

Windmills
Current meters
Turbines
Savonius rotors

BLANK PAGE

## INTRODUCTION

The Savonius rotor (S-rotor) or "wing rotor" was invented in the early 1920's by S.J. Savonius[1] as an attempt to replace sails by a more effective wind-driven propulsive device for ocean-going vessels. The original intention was to use wind power to rotate cylindrical "Flettner" rotors which generate thrust due to the Magnus effect. The principal of the Flettner rotor was used on the "Barbara", a ship of 3,000 tons which was fitted with three rotating towers 13-1/2 feet in diameter and 56 feet in height, revolving at 150 RPM (35 h.p. each). With a favorable wind this vessel could attain a speed of 10-1/2 knots.[2] Savonius found that the wing rotor itself could exert more lateral thrust than the Flettner cylinder and, consequently, he designed and built a small boat which utilized this device for propulsion.

In a paper published in 1931 Savonius[3] indicated that the results of some wind tunnel tests which he conducted with S-rotor models showed that the best of the models gave 31 percent efficiency in extracting power from the wind stream. Various applications and installations were mentioned, including: "pumping work and the generation of electricity; as pressure and exhaust fans; for moving advertising and outdoor signs; for propelling toy rotor ships; for stream recording in air and water; for airplane work in driving gyros, generators and compressors; as water motors in river and tidal flow; as a wave motor, etc., etc..".

Motivation for the present investigation arose due to a request from ONR to investigate several alternate means of utilizing a low speed stream as a power source for a low power generator. The S-rotor is suited to certain kinds of applications by its physical simplicity and ruggedness, by its omni-directional character, and by possibilities of mechanical simplicity of shafting, gearing and mounting arrangements. The usual propeller windmill type, for example, must have a tail vane and swivelling arrangement to cause the windmill to face into the winds which come from varying directions. This inevitably produces losses in power absorption capabilities in gusty, variable direction winds. In addition, these wind-

mills are usually connected to the driven mechanism through right angle gearing, whereas S-rotor applications may avoid these complications. The S-rotor has good starting torque characteristics. Whether the S-rotor is a technically useful device for power generation purposes depends, of course, on features in addition to its fluid mechanical efficiency, such as ease of maintenance, ruggedness, adaptability and cost. These other features are not considered in this report.

In the present investigations it was desired to characterize the torque vs. rpm relations for wing rotors operating in a uniform stream. The drag and side forces acting on the rotor were to be measured as well, this giving information on bearing support and mounting reactions. A number of variations of the geometrical characteristics of the rotors were studied.

A number of recent studies have been published which describe the characteristics of Savonius rotors as current meters [4,5,6]. One of these[6] gives information on the effect of changes of flow speed on rotor response and on the effect of geometrical variations of the rotor on the rpm vs. speed characteristics when used as a current meter (zero torque). Savonius' own previously mentioned article[3] states that he conducted wind tunnel tests to determine the power generating qualities of S-rotors but does not describe the tests or the results in such a way that they can be utilized. The results of the present investigation suggest that the 31 per cent rotor efficiency claimed by Savonius is not achievable. This may be attributable to differences in experimental conditions (e.g., wind tunnel flow blockage effects, etc.) or possibly to major unknown differences in rotor configuration. Savonius also says that rotor performance in "natural" winds is some 10 per cent better than in "artificial" winds and that, in fact, this is a characteristic of all windmills.

## MODELS AND APPARATUS

A photograph of the six models, designated 1 through 6, investigated in the present study is shown in Fig. 1. The models were made of plexiglass and no effort was made to have any of these models be geometrically

similar to the S-rotors which are used generally as current meter. All rotors consist of three circular plates 12 inches in diameter and four half-circular vanes of three inch radius. The vanes are arranged in pairs between plates to form two "S" shaped channels, one above the other, with the axes separated by 90 deg in the horizontal plane. The height of the vanes was varied in three of the models and four models had different separations of the vane tips with the same height. A sketch of the rotor design is given in Fig. 2 which shows some of the geometric details and gives a table of the dimensions of the six models. No "birdcage" frame, or rotor housing enshrouded the rotor during the tests; the model being mounted to a flanged rotating shaft. The vane configuration is such that the rotors turn clockwise when viewed from above under the action of an imposed flow.

The tests were conducted with the model and force measuring apparatus attached to the rotating arm in Davidson Laboratory (DL) Tank No. 2. This tank is 75 ft. square and 4.5 ft. deep. The model was situated at a radius of 31 ft. and with a test model less than 12 inches long, the flow over the rotors approximated straight line motion. The speed of the arm is controllable so that model speeds from 0 to 40 fps are achievable. This tow tank facility has been used previously to perform special calibration tests of S-rotor current meters.[5]

Figure 3 shows a sketch of the foil mounting apparatus which consists of a shaft and bearing supports which holds the rotor approximately 10 inches beneath the free surface, a rpm sensing and control system, and a force measuring dynamometer. The force balance is a DL 5 component balance conceived originally for use as an internal body balance for submerged body tests. In the present application it has the capacity to measure up to 100 lbs. drag and/or side force and up to 60 inch-lbs. rotor torque. The speed of the rotor was controlled by an electromechanical brake which is in turn controlled by a servo-system. The brake does not apply any restraining torque to the rotor during the start-up portion of the tests, but when the output of a tach generator coupled to the rotor shaft exceeds a preset reference amount the brake is activated and the

rotary speed is then held fixed by the servo system. The rotary speed of the shaft is also indicated by an interrupter signal.

All pertinent data signals are recorded on a paper tape recorder after suitable amplification and the results read from the paper tape are tabulated for processing and plotting. Quantities recorded include; rotor torque, side force, drag, interrupter signal, rotor tach generator signal (to indicate smoothness of rpm), and a tach generator signal giving the speed of the rotating arm. The speed of the rotor through the water was derived from the known distance from the center of rotation of the arm and the precisely measured time for the arm to turn through one quarter revolution.

It should be noted that the torque measured is the torque acting on all elements of the apparatus and model below the balance, and is consequently the torque acting on the rotor, in view of the symmetry of the apparatus. No bearing friction correction need be made to the torque. The drag should be corrected to account for the water drag on the rotor shaft bearing support tube to obtain the drag on the rotor alone. The side force measured includes the centrifugal force due to inward (radial) acceleration of the apparatus and the model and due to the virtual inertia effect on the water acted on by the rotor and apparatus.

## TEST PROCEDURE AND PROGRAMS

The apparatus was first mounted in position on the arm and aligned so that the drag force measured by the dynamometer would be in line with the direction of motion and the side force in the radial direction. This was done by mounting a heavy weight on the model apparatus and spinning the rotating arm with the apparatus in air; with the balance properly aligned the side force reading was high and the drag force reading negligible (corresponding to air drag). The apparatus was mounted with the shaft axis vertical so that the rotor end plates would lie in a horizontal plane.

Calibrations of torque, side force and drag were made with the apparatus in position and were checked at the beginning of each test day. A series of tests were carried out to determine the drag and side force

acting on the rotor shaft bearing support tube, the exposed shaft and the mount flange. The drag and side force measurements thus obtained can be used to correct the data obtained with the model in place. The model side force measurement as corrected still contains the influence of centrifugal force and virtual inertia effects due to the model's traversing a circular rather than a rectilinear path. A correction for these influences could be obtained by testing the model with the arm rotating in both clockwise and counterclockwise directions (when viewed from above), since the magnus (lift) force acts inward in the former instance and outward in the latter. This is due to the fact that the S-rotor will always rotate in the clockwise sense when viewed from above since its rotation is independent of the direction of the on-coming stream.

Tests were carried out by mounting a rotor on the mount flange and running a series of tests with one speed of the rotating arm. The rate of rotation of the rotor was varied in consecutive tests so that a range of operating conditions from locked rotor to free turning condition (except for shaft bearing friction) could be covered. All rotors were tested with the arm turning in the clockwise direction, in which case the lift force acts inward. The force measured by the balance is less than this lift force by small amount due to the centrifugal acceleration and virtual inertia effects on the rotor system. In addition, rotor 1 was tested with the arm turning in the counter-clockwise direction, in which case the centrifugal effects add to the lift force. The small difference between the resulting lift curves can be interpreted as twice the centrifugal effect and was not considered for the other five rotors.

Tests were conducted at a speed of approximately 3 ft. per second. One set of speed effect tests was conducted with rotor 1 at approximately 5 ft. per second.

## RESULTS

The measured forces and moments have been presented in the form of non-dimensional coefficients in Figs. 4-9. The form of the non-dimensional coefficients chosen are:

$$\text{speed ratio} = 1/\lambda = \frac{\text{rotor vane tip peripheral speed}}{\text{rotor advance speed}}$$

$$= \frac{2\pi \times \text{rps} \times w/2}{v}$$

$$\text{drag coefficient} = C_D = \frac{\text{drag force}}{\frac{\rho}{2} v^2 \, wh}$$

$$\text{lift coefficient} = C_L = \frac{\text{side force}}{\frac{\rho}{2} v^2 \, wh}$$

$$\text{torque coefficient} = C_Q = \frac{\text{rotor torque}}{\frac{\rho}{2} v^2 \frac{w^2}{2} \, h}$$

$$\text{power coefficient} = C_p = \frac{2\pi \times \text{rotor torque} \times \text{rps}}{\frac{\rho}{2} v^3 \, wh}$$

$$= C_Q \times \frac{1}{\lambda}$$

where $\rho$ = fluid mass density

$v$ = rotor advance speed

$h$ = the total height of the pairs of vanes

$w$ = the width of separation of the vane tips

The particular form of the non-dimensional coefficients used here were chosen quite arbitrarily. Significant merit comparisons of the six different model geometries can be made by noting relative magnitudes of the coefficients only for the case where the area of the vane height times the vane tip width is considered equal for alternate rotors. For other design constraints other forms of the non-dimensionalizing coefficients may be more useful. It is of interest to note that the form of power coefficient gives the ratio of the power absorbed by the rotor to the power originally contained in a column of water with cross section area = w x h. It is therefore a measure of the efficiency of the rotor as a power generating device.

The force and moment measurements recorded on the paper tape apparatus all showed rather smooth traces, with oscillations about the mean being less than about 10 percent of the average reading as long as the rotor was turning smoothly (say for $1/\lambda$ greater than 0.2). At near-stall conditions, torque oscillations became as large as 25 percent of the mean, variations occurring at a frequency of four cycles per revolution. For these conditions the drag was still quite smooth, with oscillations of around 5 to 10 percent of the average, but the lift, which is very small for these cases, showed oscillations up to 100 percent of the average.

Figure 4 shows lift and drag coefficients for rotor model No. 1 plotted as a function of the speed ratio for various experimental conditions. Corresponding results for the torque coefficient as a function of the speed ratio are given in Fig. 5. All recorded data points are spotted: open symbols being for the normal test conditions, i.e., rotating arm turning clockwise with a speed of the model of approximately 3 ft. per second; filled-in symbols for the clockwise arm rotation with model speed approximately 5 ft. per second; and flagged symbols for the counterclockwise arm rotation with model speed approximately 3 ft. per second. The degree of scatter of data points shown in these figures is typical for all of the data obtained and is indicative of the precision of measurement achieved in the tests.

A peculiar feature of these tests is that the results for counter-clockwise arm rotation show a difference in drag and torque, as well as lift, from the clockwise results. The drag and torque are lower for this direction of motion and the lift greater. The increase of lift was to be expected, due to the centrifugal acceleration effects described in the previous section. The torque reduction was not expected because the velocity gradient across the width of the rotor is quite small for this wide circular path of the model on the rotating arm (of the order of 2.5 percent difference in flow velocity between inner radius and outer radius). However, during some S-rotor current meter calibrations conducted by Sexton[5], with the same test facility, a difference in rpm for the same speed was found depending on direction of arm rotation. In this case a rotor which turned counter-

clockwise was tested, obtaining most of the data with the arm turning clockwise. For two test runs made with counterclockwise rotation the rpm came about 11 percent higher than for clockwise rotation. In the present instance, extrapolating test results for a clockwise turning rotor, the rpm for zero torque is about 5 percent lower for counterclockwise rotation than for clockwise rotation. In both tests care was taken to avoid circulation of the water in the direction of the tows by rotating the arm in the opposite direction between runs. The discrepancy in maximum power obtained amounts to 14 percent between the two directions of curved paths. It appears that the S-rotor may be peculiarly sensitive to a curvilinear fluid inflow when used either as a current meter or as a power generator.

The speed effect tests show little influence of speed on the torque characteristics, except at the low rpm, or near-stall, conditions. This tends to confirm the intuitive judgement that the S-rotor is a highly inertial fluid mechanical device whose performance depends only secondarily on Reynolds number effects. There is also an indication of some influence of speed on the lift coefficient, with $C_L$ for the higher speed being slightly higher than for the lower speed over the range of speed ratios from 0.25 to 0.7.

The effect of rotor height, or "aspect ratio", on performance is shown in Figs. 6 and 7, where the characteristics of rotors 1, 5 and 6 are presented. From Fig. 6 it is seen that the lift coefficient becomes higher and the drag coefficient lower as the relative rotor height increases. This is in accordance with experience with wings of various aspect ratios. The torque and power performance increase with relative height, as shown in Fig. 7, with the tallest model, No. 6 having about 26 percent better power absorbing qualities than the shortest.

Figures 8 and 9 show the effect of rotor vane tip width on performance, with results for rotors 1, 2, 3, and 4. This variation also alters the internal gap for flow through the rotor vanes. The dependence of drag coefficient, shown in Fig. 8 is uncertain but not very great, in any case. The lift coefficient, due to Magnus force, is greater for the narrower vane tip widths, or larger internal flow gaps. Tests on rotating smooth cylinders,[7] with a ratio of peripheral velocity to forward velocity of one, give a lift

coefficient of about 1.0. This is well below that found with these self-driven S-rotors for that velocity ratio, particularly with the narrow vane tip width. The torque and power characteristics, shown in Fig. 9, reveal that the wider tip widths perform better, the widest (model 4) giving an efficiency of absorbing power from the water of 15 percent. It is not clear whether the trend of increasing power absorption capability with increased vane tip width will continue for significantly larger tip widths but it is not to be expected that it will.

No consideration has been given in these tests to "tilted" inflows to the rotor, i.e., cases where the rotor axis is not normal to the plane of the flow. Sexton[5] has examined this matter in calibrating some S-rotors and found that: "The output of the Savonius rotor is clearly dependent upon the speed of flow, the tilt angle, the direction of tilt relative to the flow, and the design of the rotor and rotor housing".

## DISCUSSION

For almost all conceivable utilizations of the S-rotor as a power generating device the most pertinent kinds of information required are the power absorbing capacity and the rate of revolutions. The drag and side force characteristics would be of interest mainly for considerations of bearing or foundation design. In view of this the discussion will treat the torque and power characteristic measurements for these S-rotors only.

Summarizing the results of the tests conducted on the six models of geometric variations in S-rotors, two significant trends may be recognized: 1) The power absorbing qualities improve with relative height of the rotor vanes, and 2) The power absorbing qualities improve with increase of rotor vane tip width, at least up to the maximum spacing tested. The former trend would be expected to continue for continuing increases in rotor height, asymptotically approaching a limit as the height increases indefinitely, in much the same manner as airplane wing performance improves with increase in aspect ratio. It is not clear whether the latter trend would persist for increasing vane tip widths. In the original descriptions of the Savonius rotors,[1,3] much emphasis was laid on the beneficial aspects

of the internal flow, from vane-to-vane. If these influences are indeed beneficial, it is to be expected that an optimum spacing might occur. Test results presented in Fig. 9 suggests that this optimum would probably have at least a little greater spacing than model 4, the widest tested. Considerations of still greater spacings, where the vanes do not overlap, suggests that drag on rotor end plates would produce a decreasing efficiency with increasing size beyond some "best" configuration if it lay in this range.

The influence of the curved inflow, due to the circular path of the model attached to the rotating arm, on the rotor's efficiency is of interest. It suggests that modifications of rotor vane shape, from the circular arc design tested, might result in meaningful performance gains for straight-line inflow. In view of this curved flow effect it would be prudent to reduce performance predictions derived from the clockwise rotating tests by some 5 to 7 percent. This allowance may be counterbalanced, in whole or in part, by consideration of Savonius' claim that windmills and rotors perform some 10 percent better in artificial wind. In the case of the rotor, this may be attributed in part to its omni-directional character and its ability to extract energy from turbulent fluid motion. Finally, the possibility of utilizing naturally occurring curvilinear currents (such as might occur in the vicinity of natural obstructions or sharp river bends) to enhance the rotors' performance should not be overlooked.

As an indication of the power absorbing capabilities of the "standard" S-rotor, model No. 1, it may be noted that during the tests at 3 ft. per second, rotating arm turning counterclockwise, the greatest power generated was about .004 HP or 3 Watts, obtained at a rate of about 52 revolutions per minute. It should be recalled that the power generated would increase with the third power of the stream speed and the rate of rotation linearly with the stream speed for optimum performance.

A comparison of the S-rotor's power generating characteristics with the performance of various propeller type windmills is given in Fig. 10. The performance of various types of practically utilized windmills was taken from Fales'[8] article in Marks' "Engineering Handbook", while the

theoretical best efficiency curve for propeller type windmills was obtained from Glauerts'[9] contribution to Durands' "Aerodynamic Theory". The present test results clearly reveal that much better fluid mechanical efficiency can be achieved with turbine impellers other than S-rotors. The rotary speed of S-rotors is also seen to be rather low compared to other, more efficient types. The starting torque for the rotors is rather high, as can be seen from Figs. 5, 7 and 9, which is not the case for the fast running windmills.[9]

In no case was the efficiency of an S-rotor found to approach the 31 percent figure quoted by Savonius.[3] Indeed, had it approached this figure it would have been remarkable, since a device in which there are surely significant eddy-making losses would not be expected to perform nearly as well as the ideal achievable. Since his experiments are not described, except to note that they were conducted in a wind tunnel, a fair criticism of his high efficiency claim is not feasible. Some experimental discrepancy or major variation in vane configuration may have contributed, although the latter could not be expected to account for such a great improvement in performance.

## CONCLUSIONS

1. The conventional Savonius rotor is not a very efficient power generating device when placed in a uniform steady stream. Other, propeller type, windmills are easily twice as efficient in extracting power from the stream.

2. Simple variations of the S-rotor geometry can be utilized to improve its performance, but it does not provide improvements sufficient to consider the overall performance good. It is likely that adjustments in rotor vane shape could lead to performance improvements of roughly similar magnitude. The resulting rotor would still not be competitive with the performance which can be obtained with propeller type turbines.

3. The omni-directional quality of the S-rotor, together with its physical and mechanical simplicity and ruggedness are advantageous features.

4. The starting torque for these rotors is high compared to propeller type windmills.

5. Savonius rotors appear to be peculiarly sensitive to curvilinear fluid inflow when used either as current meters or as turbines.

## RECOMMENDATIONS

1. Inasmuch as the power generating qualities of S-rotors have been found to be rather poor, no further effort ought to be directed to investigating their performance. An exception might occur if a specific installation made the advantageous features of S-rotors, listed under Conclusion 3 above, assume importance. In this case the most fruitful areas to investigate would be rotor vane shape and spacing.

2. The extensive use of S-rotors as current meters indicates that attention should be directed to their performance qualities in curved inflow fields.

## REFERENCES


1. Savonius, S.J., "The Wing-Rotor in Theory and Practice", Published by Savonius & Co., Printed by Nordglad and Pettersson, Helsingfors, Finland, 1925.

2. Thomas, K.H.W., "An Introduction to the Vortex Theory of Propellers" Transactions of the Institution of Marine Engineers, 1948, Vol. LX, p. 172.

3. Savonius, S.J., "The S Rotor and Its Applications", Mechanical Engineering, May 1931, pp. 333-338.

4. Gaul, R.D., "The Savonius Rotor Current Meter", A & M College of Texas, Department of Oceanography and Meteorology, College Station, Texas, 1 February 1962.

5. Sexton, R., "Some Tow Tank Calibrations of the Savonius Rotor", Lamont Geological Observatory, Palisades, New York, Technical Report No. CU-11-64, September 1964.

6. Gaul, R.D., J.M. Snodgrass and D.J. Cretzler, "Some Dynamical Properties of the Savonius Rotor/Current Meter", Marine Sciences Instrumentation, Vol. 2, pp. 115-125, 1963.

7. Prandtl, L. and O. Tietjens, "Applied Hydro and Aeromechanics", Dover Publications, pp. 82-85.

8. Fales, E.N. section on "Windmills", in Marks' "Mechanical Engineers' Handbook", Sixth Edition, pp. 9-8 to 9-13, New York, 1958.

9. Glauert, H.B., Chapter XI, "Windmills and Fins", in Division L, "Airplane Propellers", Vol. IV of "Aerodynamic Theory", Editor-in-Chief, W.F. Durand, Dover Repulication, 1963.

BLANK PAGE

MODEL 1 MODEL 5 MODEL 6

ROTOR HEIGHT VARIATIONS

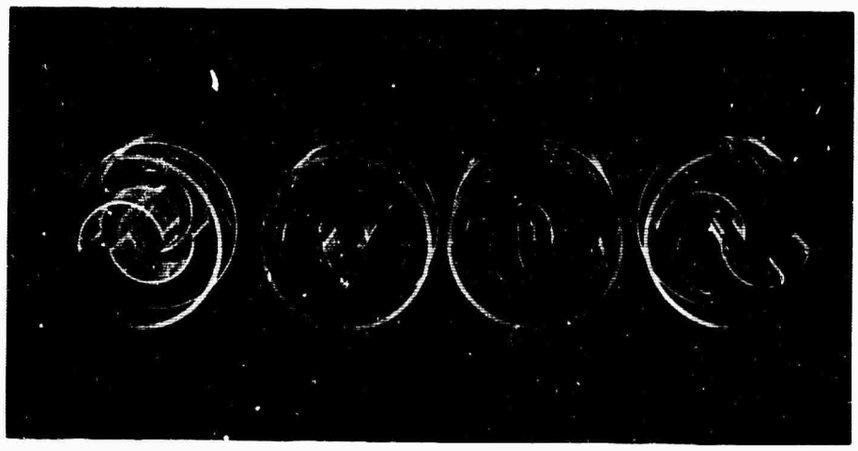

MODEL 2 MODEL 3

MODEL 1 MODEL 4

ROTOR VANE TIP SPACING VARIATIONS

FIGURE 1. SAVONIUS ROTOR MODELS USED FOR POWER GENERATION TESTS

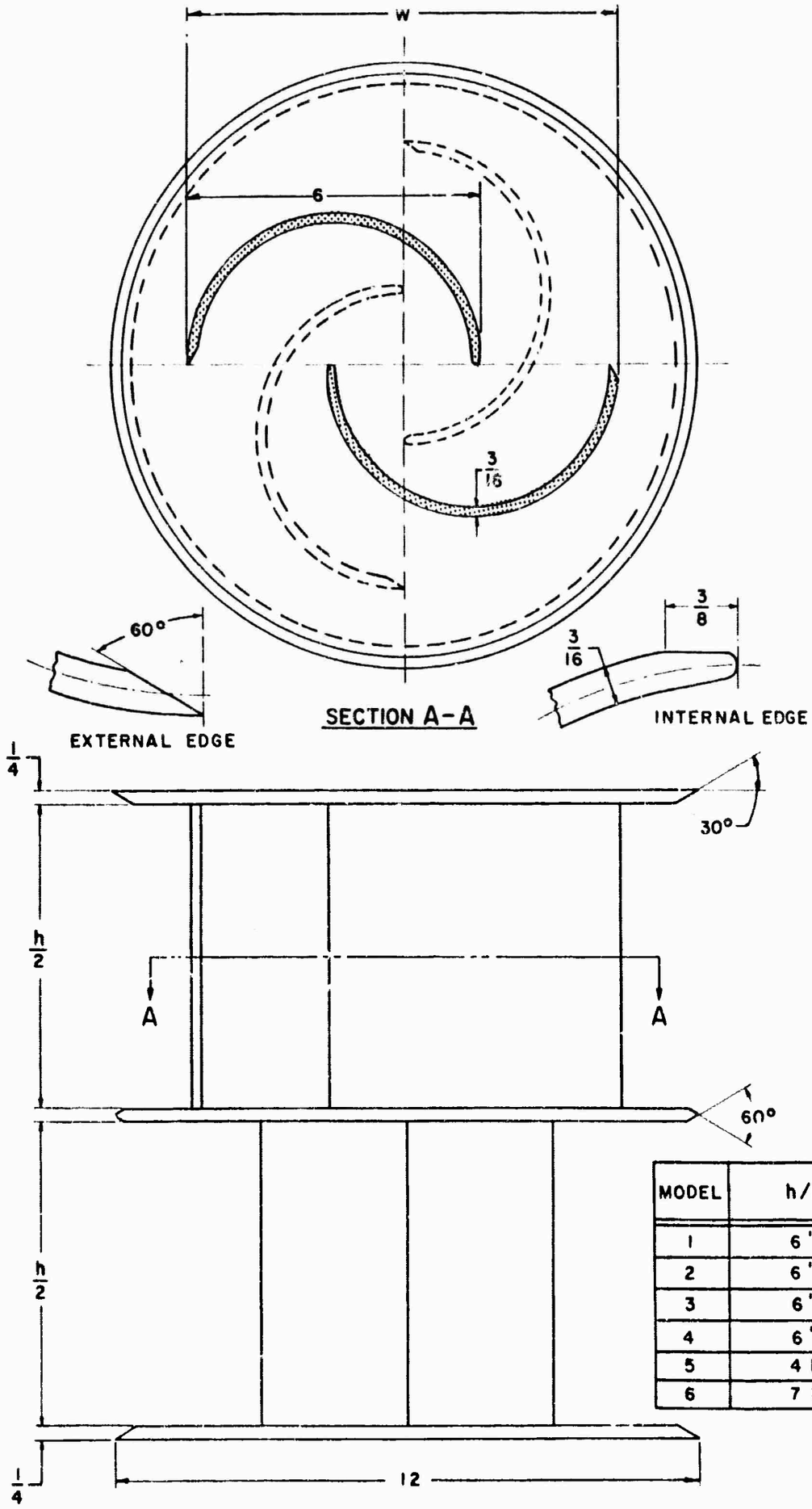


| MODEL | h/2 | W |
|---|---|---|
| 1 | 6" | 9" |
| 2 | 6" | 8 1/4" |
| 3 | 6" | 9 3/4" |
| 4 | 6" | 10 1/2" |
| 5 | 4 1/2" | 9" |
| 6 | 7 1/2" | 9" |

FIGURE 2. DETAILS OF SAVONIUS ROTOR MODEL GEOMETRIES

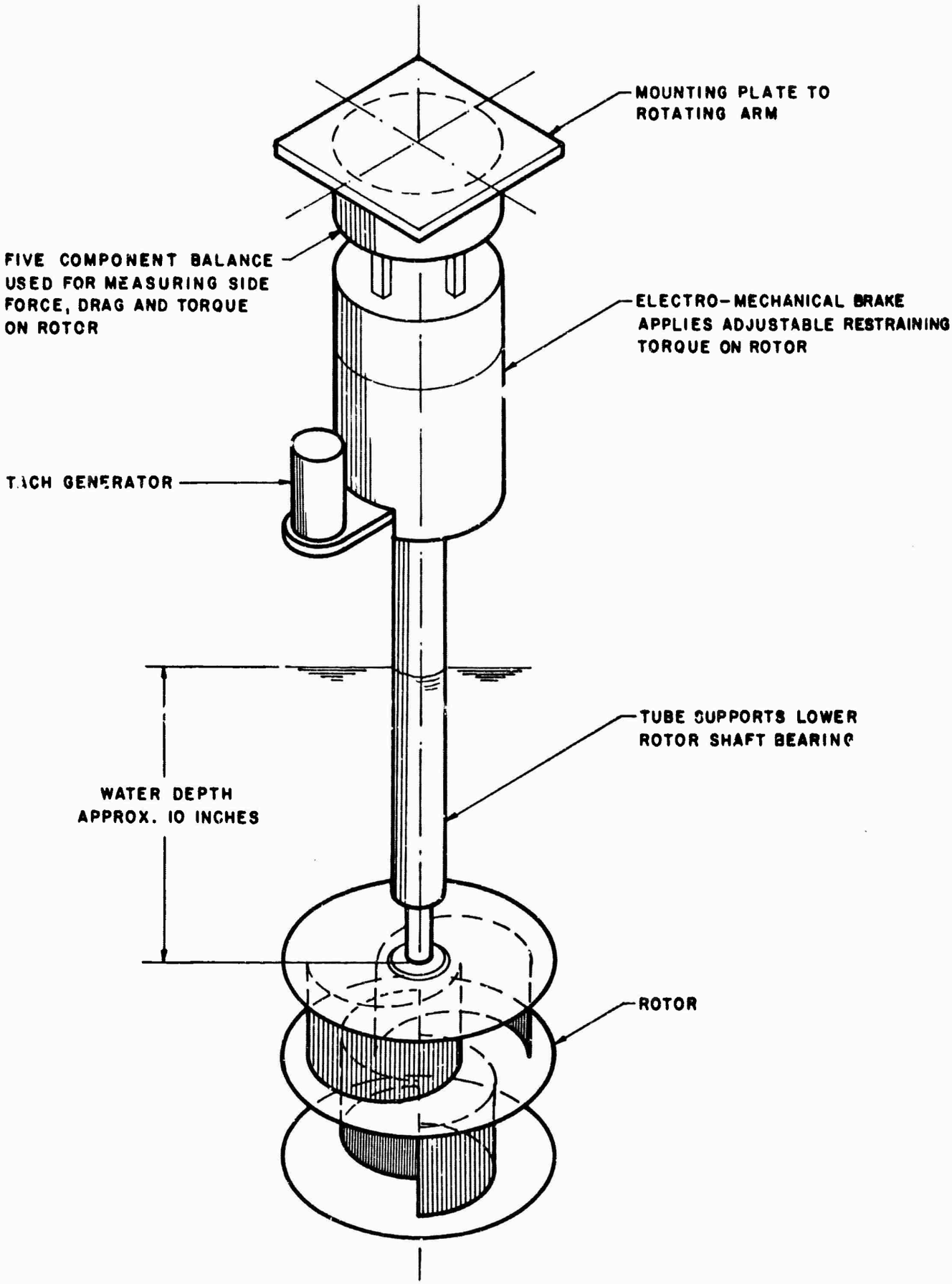


FIGURE 3. APPARATUS FOR TESTS OF SAVONIUS ROTOR MODELS

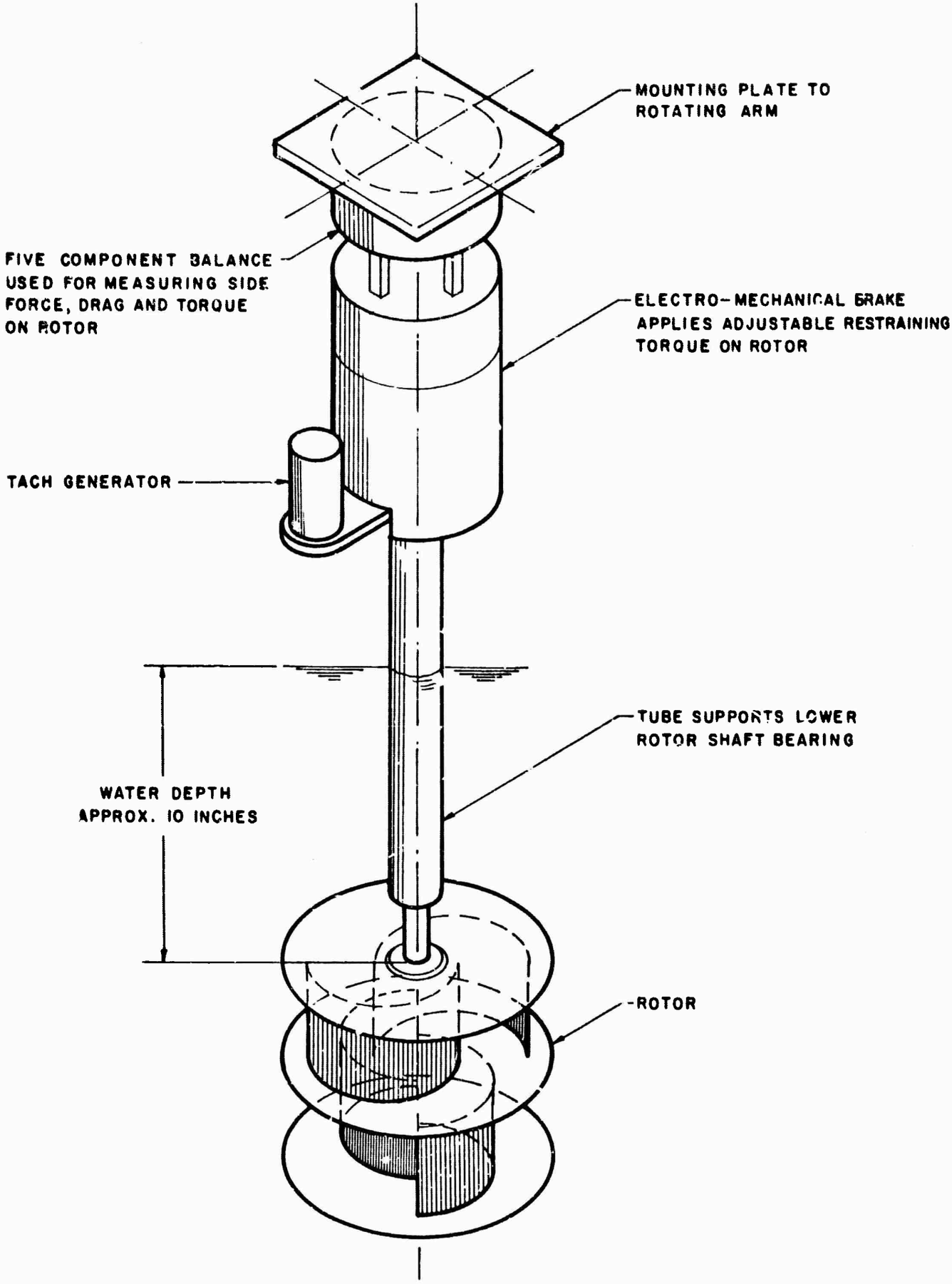


FIGURE 3. APPARATUS FOR TESTS OF SAVONIUS ROTOR MODELS

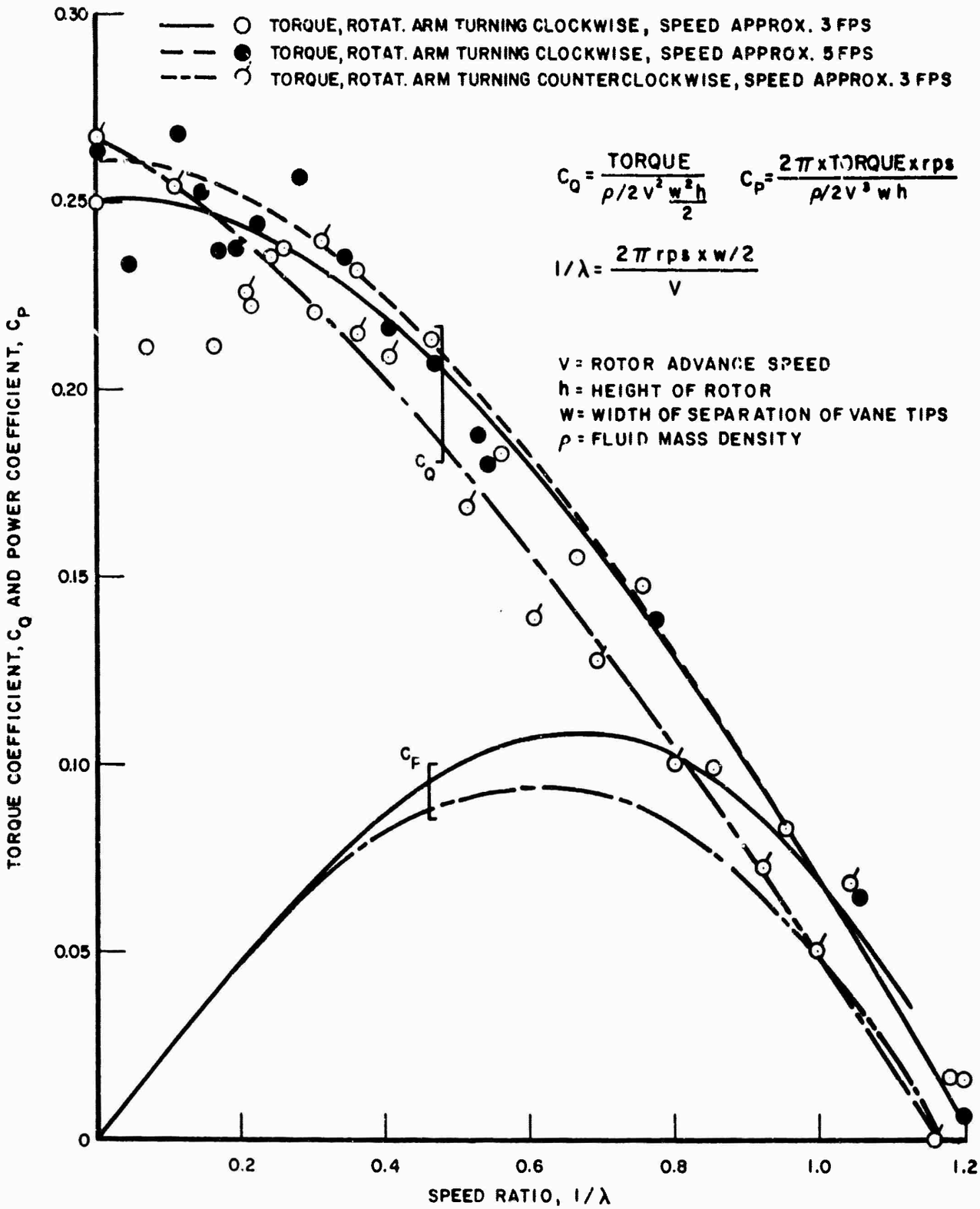


FIGURE 5. SAVONIUS ROTOR MODEL NO. I TEST RESULTS FOR TORQUE AND POWER

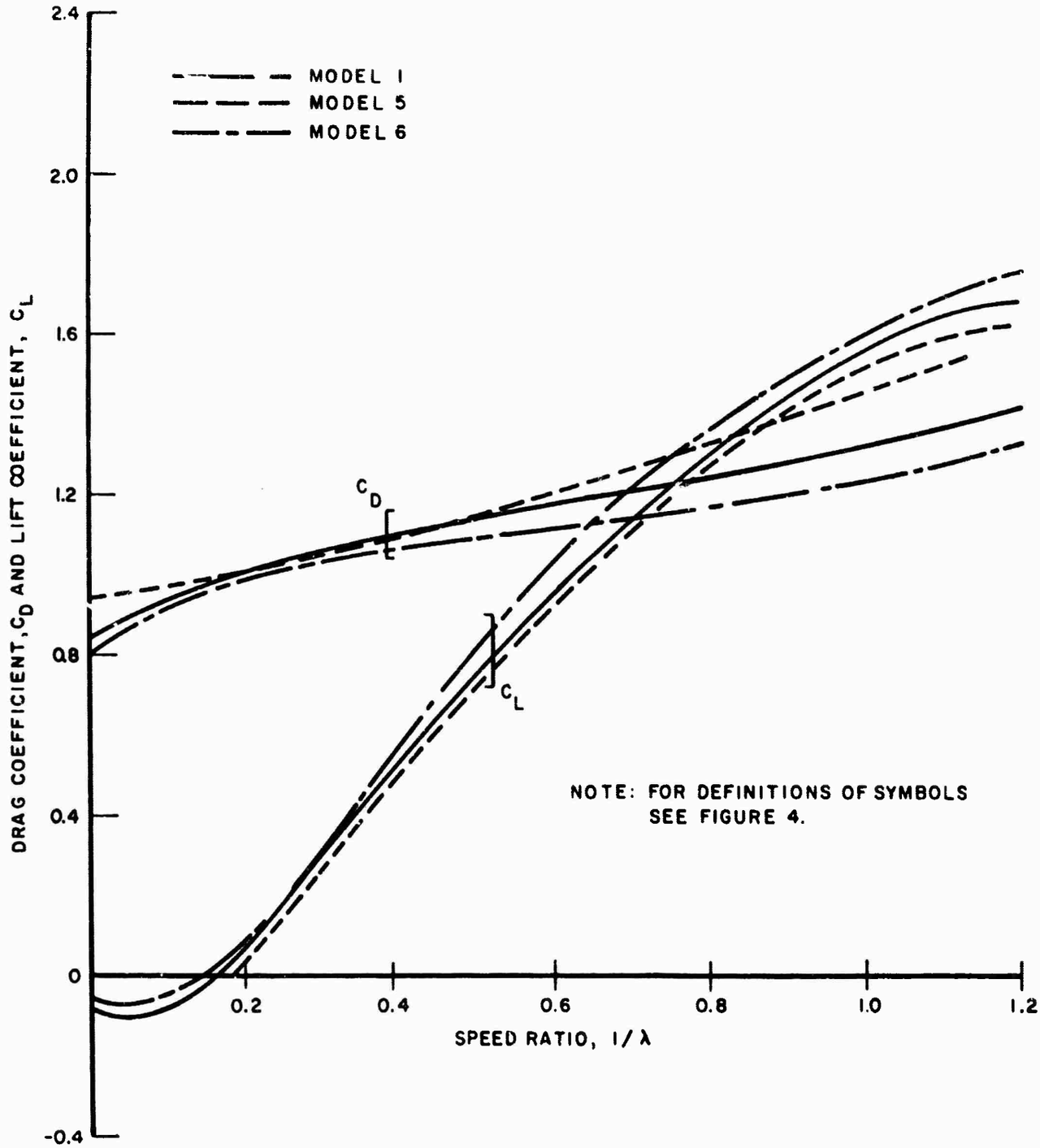


FIGURE 6. EFFECT OF ROTOR HEIGHT ON DRAG AND SIDE FORCE OF SAVONIUS ROTORS

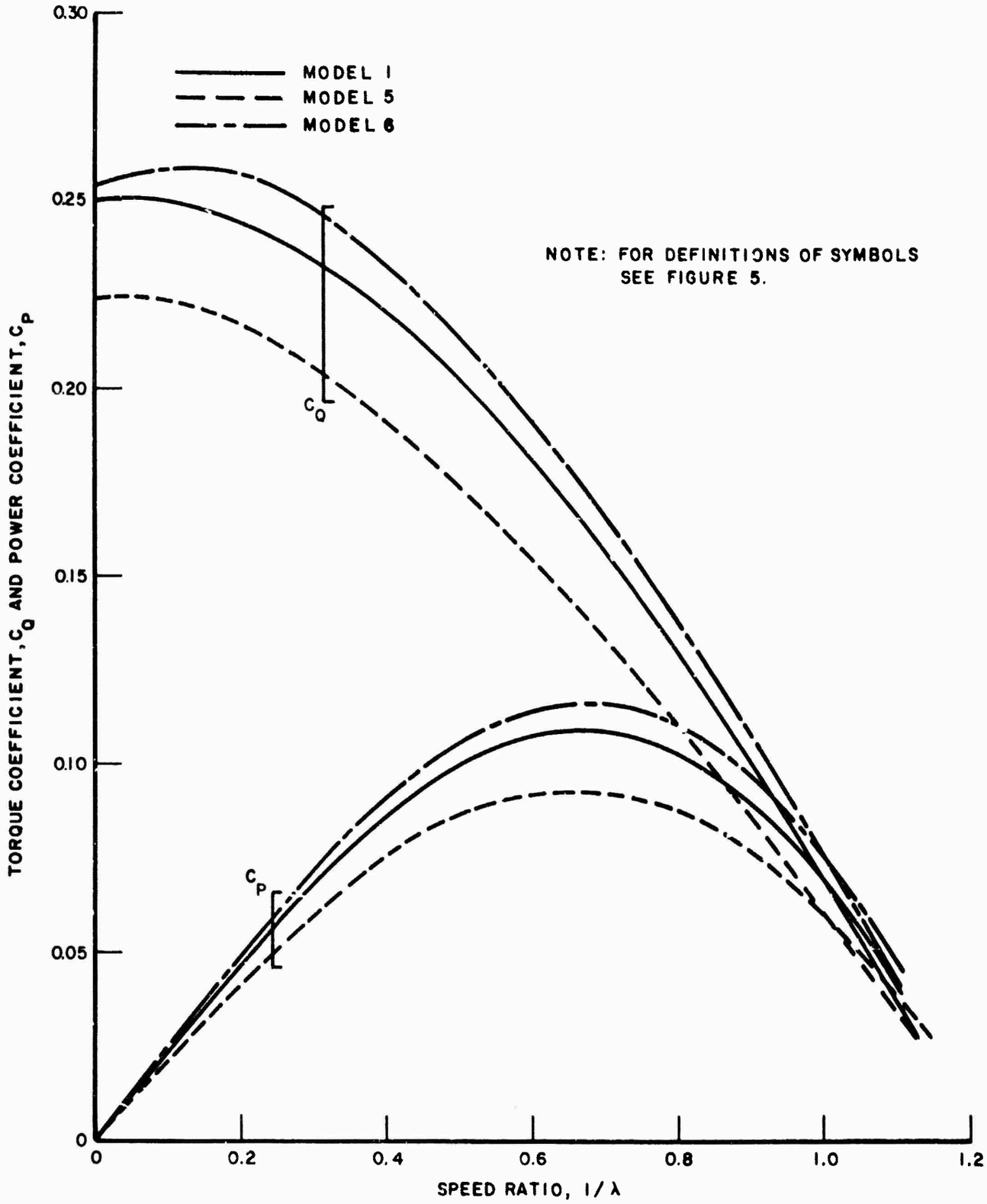


FIGURE 7. EFFECT OF ROTOR HEIGHT ON TORQUE AND POWER FOR SAVONIUS ROTORS

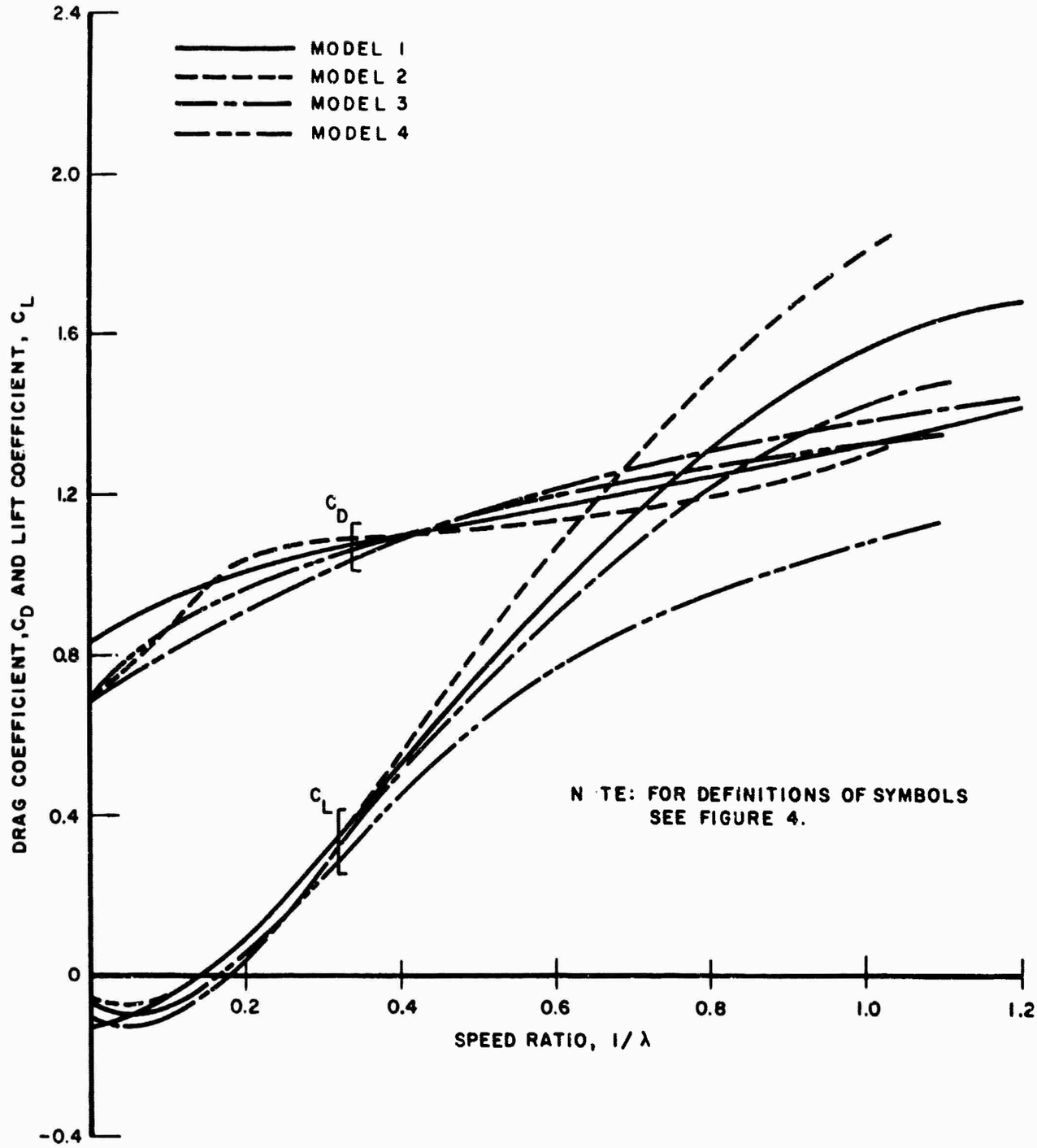


FIGURE 8. EFFECT OF ROTOR VANE TIP WIDTH ON DRAG AND SIDE FORCE FOR SAVONIUS ROTORS

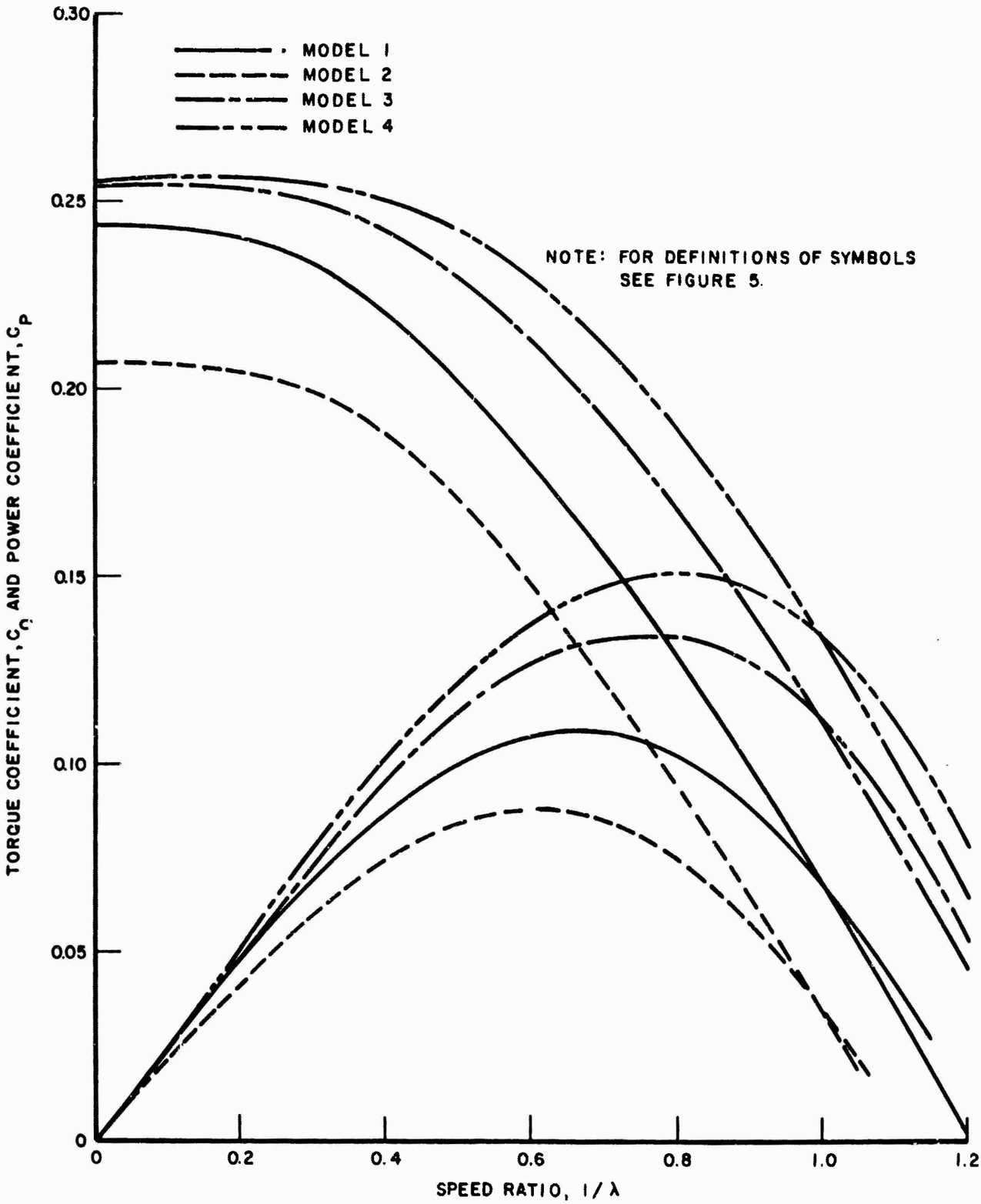


FIGURE 9. EFFECT OF ROTOR VANE TIP WIDTH ON TORQUE AND POWER FOR SAVONIUS ROTORS

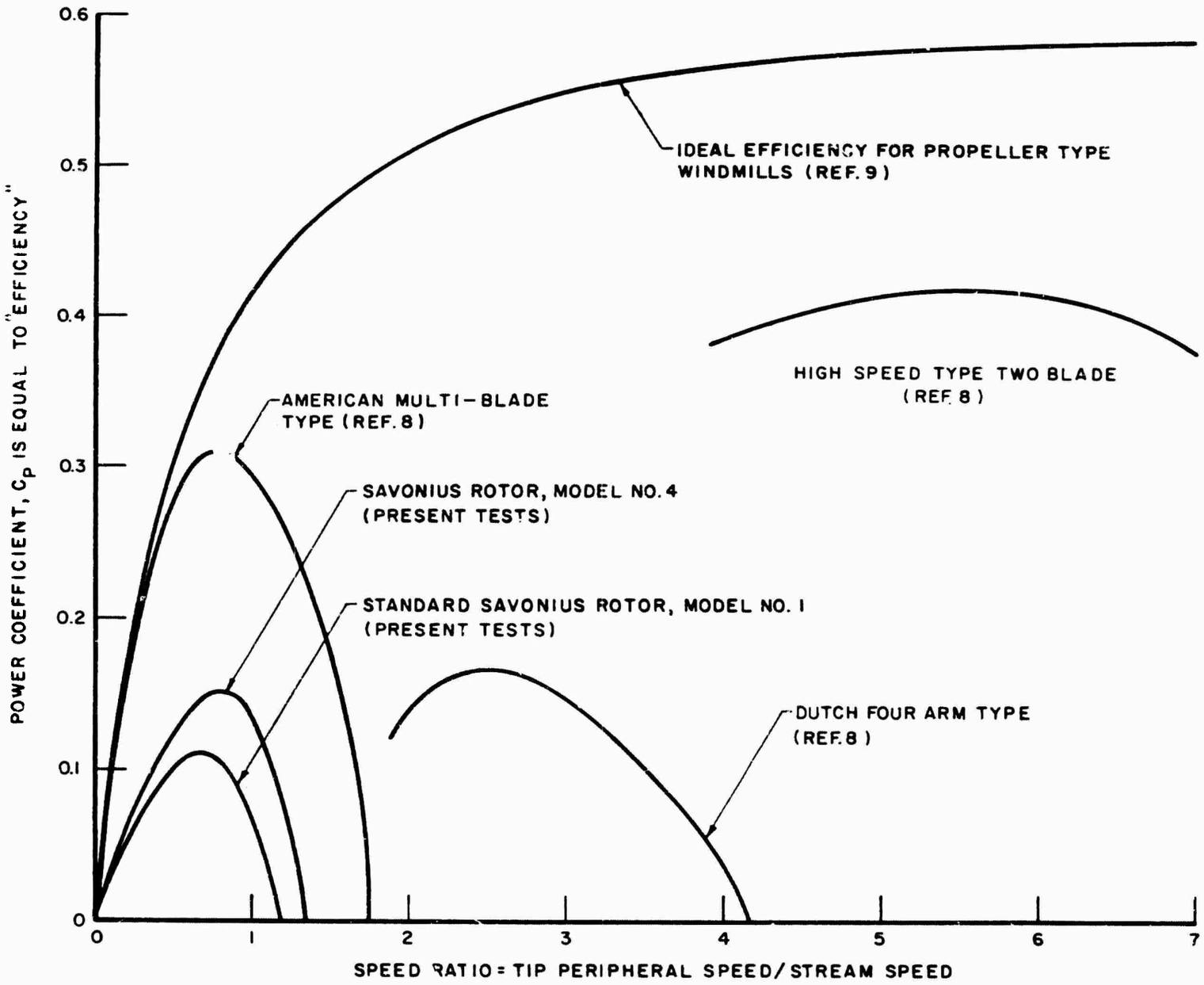


FIGURE 10. COMPARISON OF POWER GENERATING CHARACTERISTICS OF SAVONIUS ROTORS AND VARIOUS PROPELLER TYPE WINDMILLS

UNCLASSIFIED
Security Classification

# DOCUMENT CONTROL DATA - R&D

*(Security classification of title, body of abstract and indexing annotation must be entered when the overall report is classified)*

| | |
|---|---|
| 1. ORIGINATING ACTIVITY *(Corporate author)*<br>DAVIDSON LABORATORY<br>STEVENS INSTITUTE OF TECHNOLOGY | 2a. REPORT SECURITY CLASSIFICATION<br>UNCLASSIFIED<br>2b. GROUP |

3. REPORT TITLE

POWER GENERATING CHARACTERISTICS OF SAVONIUS ROTORS

4. DESCRIPTIVE NOTES *(Type of report and inclusive dates)*

FINAL

5. AUTHOR(S) *(Last name, first name, initial)*

JOHN A. MERCIER

| | | |
|---|---|---|
| 6. REPORT DATE<br>NOVEMBER 1966 | 7a. TOTAL NO. OF PAGES<br>23 | 7b. NO. OF REFS<br>9 |
| 8a. CONTRACT OR GRANT NO.<br>Nonr 263(68)<br>b. PROJECT NO.<br>c.<br>d. | 9a. ORIGINATOR'S REPORT NUMBER(S)<br>LR 1181<br>9b. OTHER REPORT NO(S) *(Any other numbers that may be assigned this report)* | |

10. AVAILABILITY/LIMITATION NOTICES REPRODUCTION IN WHOLE OR IN PART IS PERMITTED FOR ANY PURPOSE OF THE UNITED STATES GOVERNMENT. APPLICATION FOR COPIES MAY BE MADE TO THE DEFENSE DOCUMENTATION CENTER, CAMERON STATION, 5010 DUKE ST., ALEXANDRIA, VA. 22314

| | |
|---|---|
| 11. SUPPLEMENTARY NOTES | 12. SPONSORING MILITARY ACTIVITY<br>DEPT. OF THE NAVY, OFFICE OF NAVAL RESEARCH<br>PARTIALLY FUNDED BY ARPA,<br>ORDER NO. 299, AMENDMENT #2 |

13. ABSTRACT


An experimental study of the power generating characteristics of Savonius rotors towed through still water was made. Variations in rotor geometry were investigated. Power absorption, drag and side force were measured on six rotors tested in the towing tank over a range of ratios of rotor vane tip peripheral speed divided by rotor advance speed from the free-running to the locked rotor conditions.

Results indicate that the Savonius rotor is not as effective at extracting the available power from a stream of moving water of a given cross-section area as a conventional propeller type windmill.


DD FORM 1 JAN 64 1473

Security Classification

| 14. KEY WORDS | LINK A ROLE | LINK A WT | LINK B ROLE | LINK B WT | LINK C ROLE | LINK C WT |
|---|---|---|---|---|---|---|
| Windmills | | | | | | |
| Current meters | | | | | | |
| Turbines | | | | | | |
| Savonius rotors | | | | | | |

## INSTRUCTIONS

1. ORIGINATING ACTIVITY: Enter the name and address of the contractor, subcontractor, grantee, Department of Defense activity or other organization *(corporate author)* issuing the report.

2a. REPORT SECURITY CLASSIFICATION: Enter the overall security classification of the report. Indicate whether "Restricted Data" is included. Marking is to be in accordance with appropriate security regulations.

2b. GROUP: Automatic downgrading is specified in DoD Directive 5200.10 and Armed Forces Industrial Manual. Enter the group number. Also, when applicable, show that optional markings have been used for Group 3 and Group 4 as authorized.

3. REPORT TITLE: Enter the complete report title in all capital letters. Titles in all cases should be unclassified. If a meaningful title cannot be selected without classification, show title classification in all capitals in parenthesis immediately following the title.

4. DESCRIPTIVE NOTES: If appropriate, enter the type of report, e.g., interim, progress, summary, annual, or final. Give the inclusive dates when a specific reporting period is covered.

5. AUTHOR(S): Enter the name(s) of author(s) as shown on or in the report. Enter last name, first name, middle initial. If military, show rank and branch of service. The name of the principal author is an absolute minimum requirement.

6. REPORT DATE: Enter the date of the report as day, month, year; or month, year. If more than one date appears on the report, use date of publication.

7a. TOTAL NUMBER OF PAGES: The total page count should follow normal pagination procedures, i.e., enter the number of pages containing information.

7b. NUMBER OF REFERENCES: Enter the total number of references cited in the report.

8a. CONTRACT OR GRANT NUMBER: If appropriate, enter the applicable number of the contract or grant under which the report was written.

8b, 8c, & 8d. PROJECT NUMBER: Enter the appropriate military department identification, such as project number, subproject number, system numbers, task number, etc.

9a. ORIGINATOR'S REPORT NUMBER(S): Enter the official report number by which the document will be identified and controlled by the originating activity. This number must be unique to this report.

9b. OTHER REPORT NUMBER(S): If the report has been assigned any other report numbers *(either by the originator or by the sponsor)*, also enter this number(s).

10. AVAILABILITY/LIMITATION NOTICES: Enter any limitations on further dissemination of the report, other than those imposed by security classification, using standard statements such as:

(1) "Qualified requesters may obtain copies of this report from DDC."

(2) "Foreign announcement and dissemination of this report by DDC is not authorized."

(3) "U. S. Government agencies may obtain copies of this report directly from DDC. Other qualified DDC users shall request through _____."

(4) "U. S. military agencies may obtain copies of this report directly from DDC. Other qualified users shall request through _____."

(5) "All distribution of this report is controlled. Qualified DDC users shall request through _____."

If the report has been furnished to the Office of Technical Services, Department of Commerce, for sale to the public, indicate this fact and enter the price, if known.

11. SUPPLEMENTARY NOTES: Use for additional explanatory notes.

12. SPONSORING MILITARY ACTIVITY: Enter the name of the departmental project office or laboratory sponsoring *(paying for)* the research and development. Include address.

13. ABSTRACT: Enter an abstract giving a brief and factual summary of the document indicative of the report, even though it may also appear elsewhere in the body of the technical report. If additional space is required, a continuation sheet shall be attached.

It is highly desirable that the abstract of classified reports be unclassified. Each paragraph of the abstract shall end with an indication of the military security classification of the information in the paragraph, represented as *(TS)*, *(S)*, *(C)*, or *(U)*.

There is no limitation on the length of the abstract. However, the suggested length is from 150 to 225 words.

14. KEY WORDS: Key words are technically meaningful terms or short phrases that characterize a report and may be used as index entries for cataloging the report. Key words must be selected so that no security classification is required. Identifiers, such as equipment model designation, trade name, military project code name, geographic location, may be used as key words but will be followed by an indication of technical context. The assignment of links, roles, and weights is optional.

DD FORM 1 JAN 64 1473 (BACK)