AMRL-TR-66-25

AD 641389

THE EFFECT OF PRIOR EXPERIENCE ON ACQUIRING SKILL ON A SIMULATED INERTIAL CONTROL TASK

RICHARD GEISELHART

JULY 1966

CLEARINGHOUSE
FOR FEDERAL SCIENTIFIC AND TECHNICAL INFORMATION

Hardcopy	Microfiche		
$2.00	$0.50	33 pp	

ARCHIVE COPY

Code 1

Distribution of this document is unlimited

RECEIVED
1966

AEROSPACE MEDICAL RESEARCH LABORATORIES
AEROSPACE MEDICAL DIVISION
AIR FORCE SYSTEMS COMMAND
WRIGHT-PATTERSON AIR FORCE BASE, OHIO

NOTICES

When US Government drawings, specifications, or other data are used for any purpose other than a definitely related Government procurement operation, the Government thereby incurs no responsibility nor any obligation whatsoever, and the fact that the Government may have formulated, furnished, or in any way supplied the said drawings, specifications, or other data, is not to be regarded by implication or otherwise, as in any manner licensing the holder or any other person or corporation, or conveying any rights or permission to manufacture, use, or sell any patented invention that may in any way be related thereto.

Requests for copies of this report should be directed to either of the addressees listed below, as applicable:

Federal Government agencies and their contractors registered with Defense Documentation Center (DDC):

DDC
Cameron Station
Alexandria, Virginia 22314

Non-DDC users (stock quantities are available for sale from):

Chief, Input Section
Clearinghouse for Federal Scientific & Technical Information (CFSTI)
Sills Building
5285 Port Royal Road
Springfield, Virginia 22151

Organizations and individuals receiving reports via the Aerospace Medical Research Laboratories' automatic mailing lists should submit the addressograph plate stamp on the report envelope or refer to the code number when corresponding about change of address or cancellation.

Do not return this copy. Retain or destroy.

600 - October 1966 7-151

ACCESSION for
CFSTI WHITE SECTION ☑
DDC BUFF SECTION ☐
UNANNOUNCED ☐
JUSTIFICATION Per Statement on file
BY
DISTRIBUTION/AVAILABILITY CODES
DIST. AVAIL. and/or SPECIAL
1

THE EFFECT OF PRIOR EXPERIENCE ON ACQUIRING SKILL ON A SIMULATED INERTIAL CONTROL TASK

RICHARD GEISELHART

Distribution of this document is unlimited

FOREWORD

The research reported was performed in the Operator Training Branch, Training Research Division of the Behavioral Sciences Laboratory, Aerospace Medical Research Laboratories, Wright-Patterson Air Force Base, Ohio. The research was conducted under Project 1710, "Training, Personnel and Psychological Stress Aspects of Bioastronautics," Task 171003, "Human Factors in the Design of Devices for Operator Training and Evaluation." Dr. Gordon A. Eckstrand, Chief of the Training Research Division, was project scientist. Dr. W. Dean Chiles, Chief of the Operator Training Branch, was task scientist. The contribution of Dr. T. E. Cotterman, task scientist at the time the research was initiated, is also acknowledged.

The cooperation of the personnel of the Fighter Operations Division, Directorate of Flight Testing, Aeronautical Systems Division, Wright-Patterson Air Force Base, Ohio, who served as subjects, is gratefully acknowledged. Many of their helpful suggestions also greatly contributed to the research. The contribution of the Research Instrumentation Branch, Training Research Division, Aerospace Medical Research Laboratories, particularly Mr. Ralph Roberts, is also gratefully acknowledged. Finally, the helpful guidance of Miss Patricia Knoop of the Simulation Techniques Branch, Training Research Division, was invaluable in formulating the equations for the scoring system.

This technical report has been reviewed and is approved.

WALTER F. GRETHER, PhD
Technical Director
Behavioral Sciences Laboratory
Aerospace Medical Research Laboratories

ABSTRACT

The performance of test pilots and college student subjects in acquiring the skill to control the attitude of a simulated space vehicle was compared. The purpose of the comparison was to investigate transfer of training to this type of task as a function of prior pilot experience and determine the degree to which one may generalize from students to pilots. There was also a further breakdown of the student group into experimental subgroups to assess the effects of type of control/display relationship and the order of part training on the acquisition of the vehicular control task. The secondary comparisons within the student group were to determine optimal training conditions to make the comparison with the pilots as equitable as possible. The conclusions based on the results of the study were (1) there appear to be more positive transfer effects than negative in transitioning from flying aircraft to a simulated inertial control task; (2) the degree to which generalizations can be made from students to pilots depends on the amount of training given the students provided an optimal control/display relationship is used; (3) previously untrained subjects can achieve skill levels comparable to pilots on this type of task, but it takes more trials for the nonpilot to do so; (4) order of part training does not appear to be an important variable in training on this type of task.

SECTION I

INTRODUCTION

One of the more critical areas in the space pilot's training program is that of vehicular control. The orbiting space vehicle, unlike the conventional aircraft, operates in an undamped or frictionless environment; this makes its control dynamics somewhat unique. In the aerodynamic vehicle, attitude is controlled largely by the interaction between control surfaces and the atmospheric envelope, which constantly exerts a force on the vehicle. Whereas, the inertial or space vehicle's attitude must be controlled through internal forces furnished by small reaction jets positioned along the various axes of the craft, since there are no external forces or damping acting on it (for this reason the control that activates these jets is called a reaction control). This difference in system dynamics (aerodynamic vs inertial) in turn has led to changes in the pilot's control task. In the aircraft, the pilot's task in controlling the attitude of the vehicle is a rate control task, i.e., a given amount of displacement of the control stick imparts a given pitch or roll rate to the vehicle and when the control is returned to the neutral or null position the vehicle tends to stabilize at some given attitude due to aerodynamic damping. On the other hand, the attitude control task in the orbiting space vehicle is one of acceleration control, i.e., for a given displacement of the control a constantly increasing rate of change of pitch or roll takes place. When the control is returned to the null position the angular position of the vehicle continues to change at whatever rate happens to exist at the time the control is nulled. Furthermore, to stabilize the vehicle at a given attitude one must exert a control movement in the opposite direction for an equal amount of time to cancel out the first control input as the vehicle approaches the desired angular position. Thus the attitude control task in the spacecraft is more of a timing response rather than a positional response as in an aircraft. This, of course, is discounting the proportional reaction control where amount of control displacement does vary intensity of thrust which interacts with the temporal variable. For purposes of this investigation we will be interested in the discrete or fixed-thrust type of reaction control.

Another characteristic of the astronaut's control task that differentiates it from that of the aircraft pilot's task is the increased sensitivity of vehicle response to control inputs. This increased sensitivity can induce the pilot to over-control the inertial vehicle.

In summary, there are three basic differences between the aerodynamic control task and the inertial control task: (1) rate control vs acceleration control; (2) increase in sensitivity of control; and (3) use of an on/off reaction control. Because of these differences in skills required of the astronaut, extensive prior experience in flying aircraft may not be of special advantage and in some cases may even yield negative transfer effects. If extensive training as a pilot is of no great advantage with respect to vehicular control skill, the population of potential astronauts might be greatly expanded. It would also enable younger men to be trained as astronauts and make it much easier to train the scientist as an astronaut rather than vice versa.

The primary purpose of this study was to compare the performance of a nonpilot group of college students with a group of Air Force test pilots in the acquisition of a two-dimensional attitude control task in a simulated inertial vehicle. This would make it possible to determine how successfully nonpilot personnel can master such a skill,

identify areas of positive or negative transfer in the pilots, and determine the degree to which one may generalize research findings to pilots in this type of task. A secondary purpose was to determine optimal control/display (C/D) relationships for the student group to insure that differences between students and pilots would not be magnified by an unfavorable C/D relationship. According to studies done by Loucks (refs 1 and 2), Grether (ref 3), and Gardner (ref 4), the C/D relationship affects performance on a tracking task of this type, especially in naive subjects. Order of part training in each one of the single dimensions was also investigated to control for differences in difficulty between the pitch and roll axes and to observe differential transfer effects, if any, between the two. The second phase of the study was also undertaken to determine optimal training techniques for students to be used in future research.

SECTION II

APPARATUS AND PROCEDURE

The apparatus for conducting the experiment was a simulation of the attitude control system of an inertial vehicle and included a nonproportional reaction controller which controlled an attitude display complex that depicted the dynamics of the simulated spacecraft. However, due to design limitations imposed by the equipment available at the time, a two-axis control and display were used instead of a three-axis control and display; thus pitch and roll were the only two dimensions simulated. The entire system, called the Vehicular Control Apparatus (VCA) consisted of: (1) a Donner Model 3000 Analog Computer, which provided the dynamics for the attitude display, and simulated the fuel system, and drove the fuel and rate meters used in the subject's display panel; (2) a Servosystem to drive the attitude display; (3) a two-axis sidearm reaction control stick; (4) an experimenter's control panel with a sequence programmer; (5) various power supplies for the servo and display; (6) electromechanical timing apparatus for measuring time-off-target; and (7) a subject display panel. The computer program and diagram of the apparatus are shown in figure 1. The entire setup can be seen in figure 2.

The subject's display panel shown in figure 2 consisted of a standard Air Force MM-4 attitude indicator, which was the primary display, flanked by a secondary display of two voltmeters which informed the subject of the rate of angular velocity of the primary instrument and also provided information on direction of the angular velocity. Thus, the display was partially quickened to make the task less difficult. Also mounted on the panel were a red and a green light which served as "Ready" and "Go" signals, respectively. The red light was illuminated when the fuel meter read zero, which was between trials, or when the subject consumed all his fuel during a trial, in which case the trial was terminated. Following the intertrial interval, the red light was extinguished, and this acted as a ready signal followed by the illumination of the green light which was the signal for the subject to begin tracking. Both lights were extinguished when the subject had successfully completed the task. A fuel gauge and an elapsed time meter were also provided to give the subject feedback on amount of fuel and time expended in achieving the criterion.

The sidearm two-axis reaction control stick (also shown in figure 2) was spring loaded with positive centering and had two roller-actuated microswitches mounted on each axis—one for each direction of stick motion (roll left or right and pitch up or down). Stick displacement through 1° of arc in any direction actuated the switches

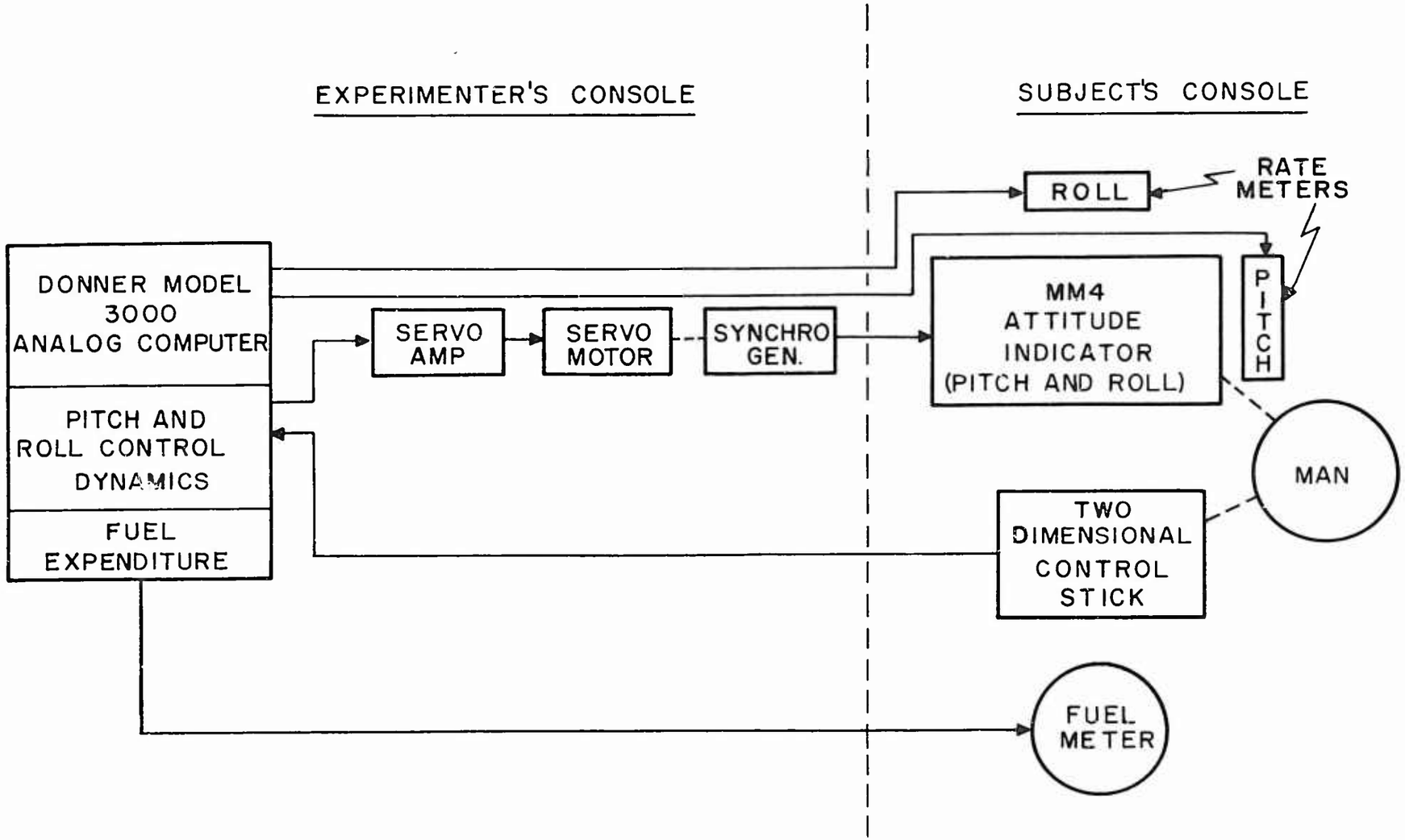

Figure 1. Two-Dimensional Vehicular Control Apparatus

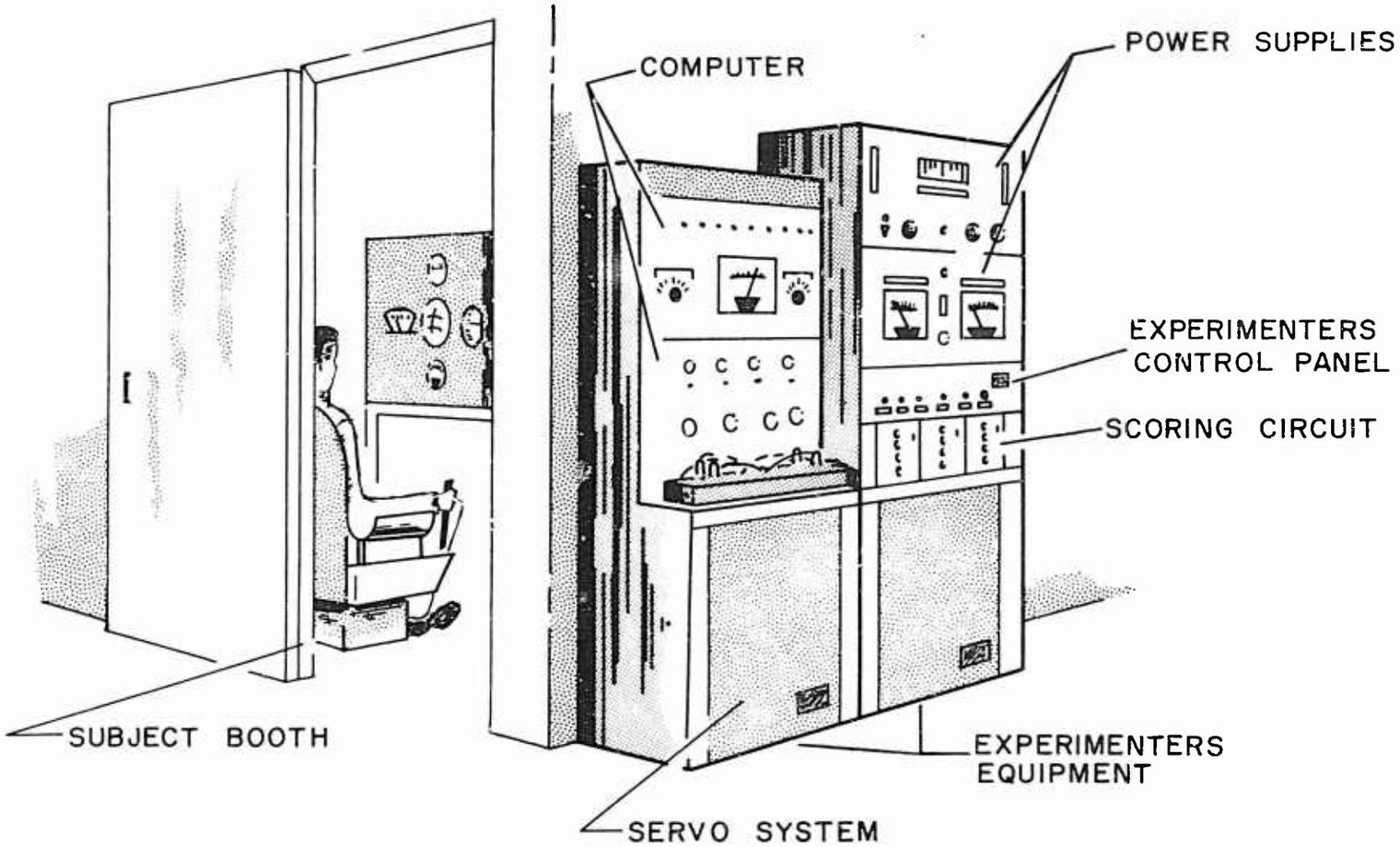

Figure 2. Vehicular Control Apparatus

by means of sliding cams. The switches were connected to the computer and activated the simulated reaction jets. The output of the jets was then fed into the computer simulation of the vehicle dynamics and ultimately to the display. Actuation of the switches also caused the system to expend fuel. (See figure 3.)

The d-c output of the computer was chopped and fed into the a-c servosystem, which was wired as a velocity servo. The servomotor was mechanically coupled to a control transformer whose output was transmitted to the MM-4 indicator, which repeated the motion of the control transformer.

The device for measuring time-off-target functioned in the following manner: a photoresistor was mounted opposite a light source so that whenever the light hit the resistor it lowered its value; this acted as a switch to turn off a Hunter Klock Counter. Intervening between the photoresistor and the light source was a slotted gear that operated off the servomotor shaft so that when the shaft of the motor was in a given angular position, designated by the experimenter as the target attitude, the slot would be opposite the light source causing the photoresistor switch to open. Thus, as long as the subject was off target, the electronic counter would run, and whenever the subject was on target, the counter would stop. Criterion attitude in each dimension was sensed using the photoresistors and total time-off-target for the combined dimensions was recorded by a third counter that was controlled by a relay on the experimenter's control panel. Whenever the subject was on target for the prescribed criterion time interval, the experimenter switched the VCA into a "Hold" condition, which stopped the total elapsed time counter. A diagram of the scoring apparatus is shown in figure 4. The experimenter's console also contained a series of Hunter timers and associated relays that automatically programed the sequence of events that constituted a trial.

The subject's task was to stabilize the attitude display at zero-degrees pitch and zero-degrees roll simultaneously for a period of 2 seconds by means of control inputs from the two-axis control stick. The subject was seated at a viewing distance of 60 cm from the primary display. A set of initial conditions was programed on the computer to initiate the problem for the subject. The sequence of events in a given trial was as follows: (1) red "Abort" light went off; (2) the display was activated at an angular rate of 40°/sec in the pitch and/or roll dimension; and (3) 5 seconds later the green "Go" light came on and the subject began tracking the display. When the subject achieved criterion, the computer was switched into a "Hold" condition and the experimenter recorded the elapsed time and amount of fuel remaining. The experimenter then computed the ratio score, a combination measure of the two scores (see method of scoring below), and verbally relayed this to the subject. Following feedback to the subject, there was a 20-second intertrial interval, and the sequence was repeated until the end of an experimental session.

Experimental Design

The study was conducted in two phases, the first being the comparison within the student group of the control/display relationship and the order of part task training on the acquisition of the two-axis attitude control task. The first phase was a three-factor repeated measures design (Case II) as described by Winer (ref 5) or a Lindquist Type III mixed factorial design (ref 6). The order of part task training was varied in two ways—training on the pitch dimension only was preceded by training on the roll dimension or vice versa. Control/display relationship was also varied in two ways—outside-in vs inside-out, i.e., direction of movement of the display was in the direction of stick displacement in the former and the opposite of stick displacement in the latter. Six subjects were randomly assigned to each of the four groups for a total of twenty-four subjects.

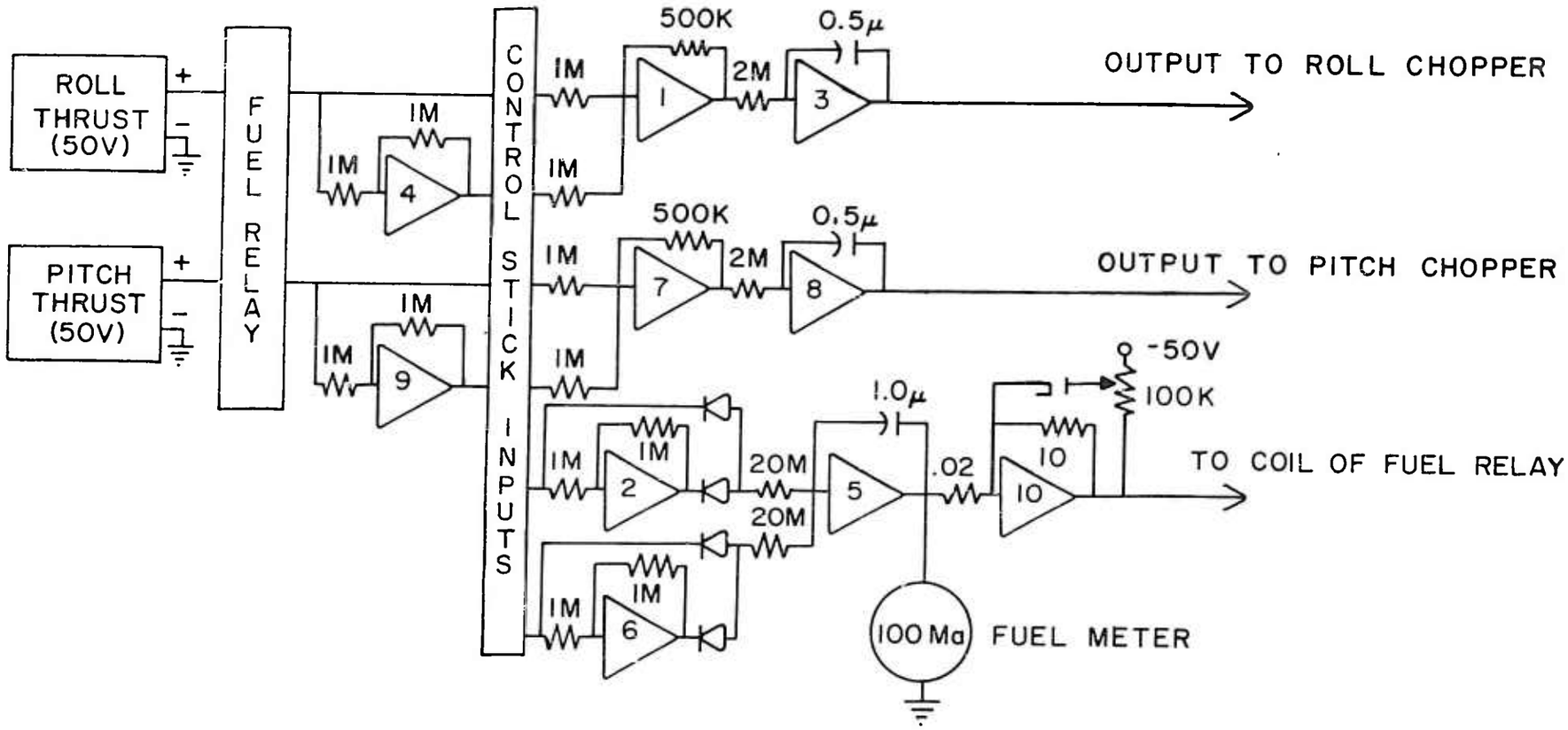

Figure 3. Schematic Diagram of Analog Circuitry

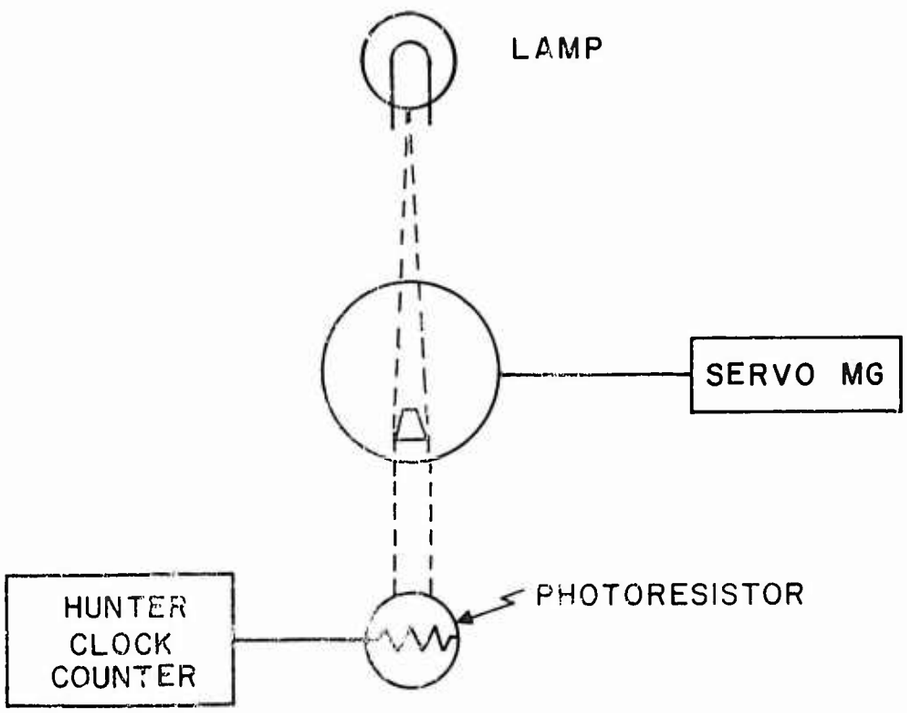

Figure 4. Diagram of Scoring Apparatus

Each subject was given a total of 192 training trials over a span of six experimental sessions equally spaced over a 12-day span (every other day). An experimental session consisted of two 16-trial blocks separated by a 20-minute rest period for a total of 32 trials per session. The first two and one-half sessions were devoted to part task training for a total of 80 trials of part task training. For any given subject, the first 32 trials were spent on the one-dimensional task (pitch or roll) followed by the second experimental session in which the subject was trained on the other dimension. In the third part task training session (one-half experimental session), the subject was given 8 trials on each dimension. Following the part task training, the subject was given 112 trials on the two-dimensional control task in the remaining three and one-half experimental sessions. Prior to each experimental session, the subject was briefed on the task for that session as to procedure to be followed. One practice trial was permitted on each of the part task experimental sessions and on the first experimental session of the two-dimensional task.

The comparison of the pilots' and students' performance was treated as a two-factor experiment with repeated measures on one factor.

In contrast to the students, the pilots were given only the inside-out control/display relationship and only one condition of part task training; the pitch dimension was presented first. This was done for several reasons, the most important being that the population of available test pilots is extremely limited for experiments requiring six separate experimental sessions over a 12-day span. (Four subjects were lost because of other commitments after having started the experiment.) Also, order of part task training had no effect on acquisition in the first (student) phase of the experiment. (See results.) The outside-in control/display relationship was avoided because it is a reversal of the C/D relationship in operational aircraft, and simulator training on an opposite relationship might interfere with the pilot's flying on the job and thus pose a safety hazard.

Method of Scoring

Acquisition of a perceptual motor skill, such as we have in this task, is usually measured in one of two ways: (1) the minimal physical effort required to accomplish the task or (2) minimal time required to meet a criterion performance. Frequently one measure takes its toll on the other, i.e., speed is usually sacrificed for efficiency and vice versa. In the vehicular control task used in this study the amount of fuel consumed was the measure of efficiency (the less fuel used the fewer the control inputs). Time to criterion was the other measure of skill. To insure that the subject would accomplish the task in a maximally skillful manner using both minimal fuel and time, a combination of the two measures was used in assessing the subject's skill level, and this information was given to the subject following each trial.

The combination measure employed was called a ratio score and was computed by the following formula:

$$\text{Ratio Score} = \frac{\text{Elapsed Time in Seconds}}{\text{\% Fuel Remaining}} \times 100$$

The lower the score the better the subject's skill level. For example, if a well-trained subject achieved criterion in 18 seconds and used 10% of his fuel (90% remaining) his score would be computed in the following manner:

$$\frac{18}{90} \times 100 = .2 \times 100 = \text{A ratio score of } 20.$$

Using this method of scoring, time is relatively more important, but only so long as fuel consumption is kept to a reasonable minimum. The relative importance of the two measures can be described by the following two differential equations derived from the ratio score formula $S = \frac{T}{F} \times 100$:

$$\frac{ds}{dt} = \frac{1}{F} \times 100 \qquad (1)$$

$$\frac{ds}{df} = \frac{-T}{F^2} \times 100 \qquad (2)$$

where ds = first derivative of ratio score

dt = first derivative of time score

df = first derivative of fuel score

Equation 1 describes the average rate of change of the ratio score with respect to time. Equation 2 describes the average rate of change in the score with respect to fuel. Thus, rate of change of the ratio score is a directly proportional, linear function of time and an inversely proportional, nonlinear function of fuel. These relationships can be seen graphically in figure 4.

The subject was allowed 2 minutes to reach criterion performance. If he did not do so within the time limit, the trial was terminated and he was assigned a ratio score of 150 (the arbitrary limit of scoring set by the experimenter). This limit also could be reached by expending all the fuel available or by a combination of time and fuel expenditure without exhausting either one. (See fig. 5.) This arbitrary limit was exceeded in slightly less than 6% of the total number of trials (160 of 2688 responses) in the student groups on the two-dimensional task. Eighty-six percent of the maximal responses (138) in turn occurred in the first 2 days of whole task training. Less than 1% of the pilots' scores (4 out of 560 responses) fell into the maximal response category. The minimal score possible was 8 and was not achieved by any subject in the experiment. In a large majority of the cases (72.5%), a maximal score was attained by expending both time and fuel. The time limit was exceeded in 20% of the cases. A total distribution of the scores is shown in figure 6.

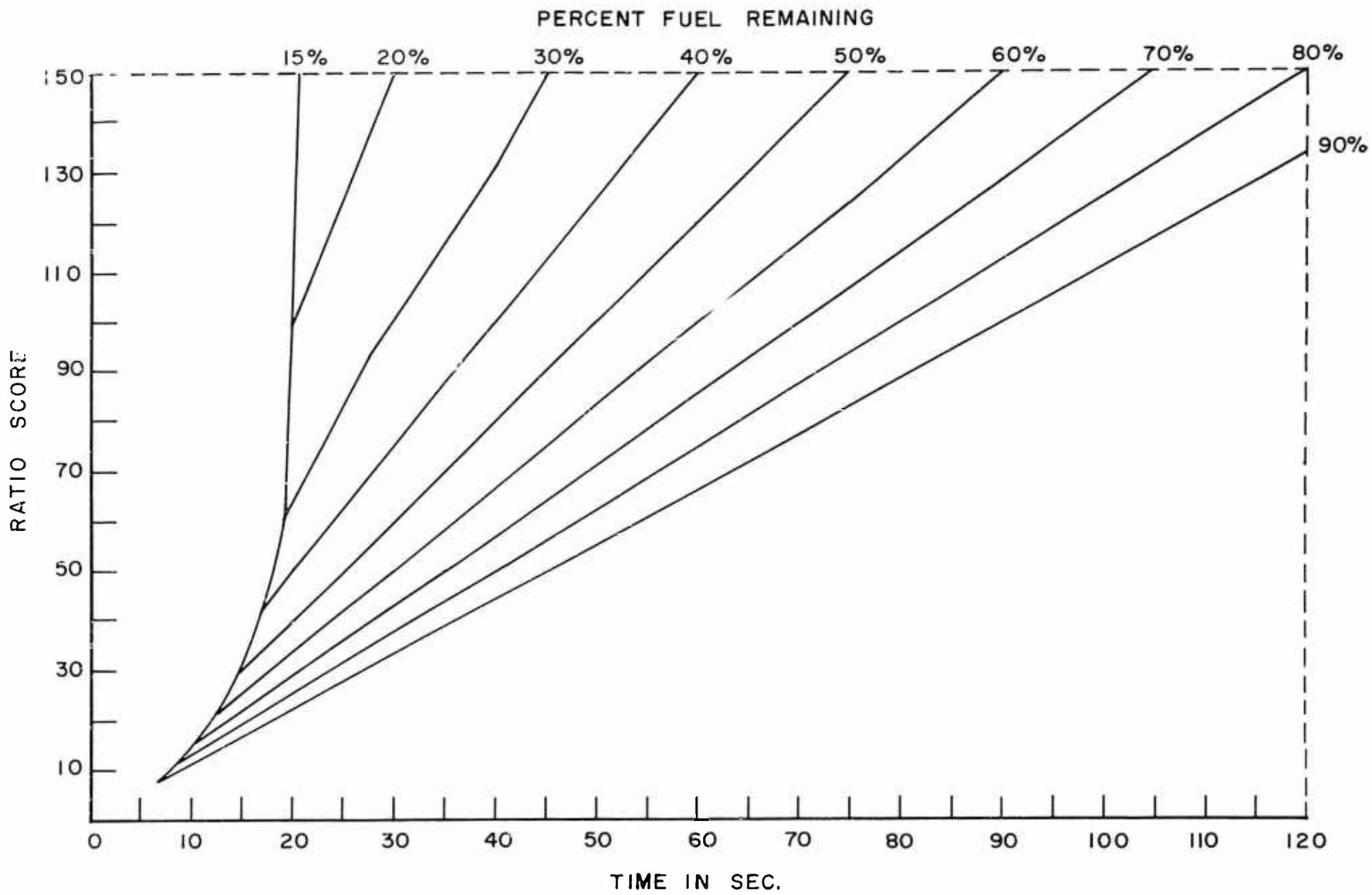

Figure 5. Ratio Score as a Function of Time and Fuel Consumption The vertical line near the ordinate is the physical limit of the system, i.e., maximal amount of fuel that could be expended in a given time period.

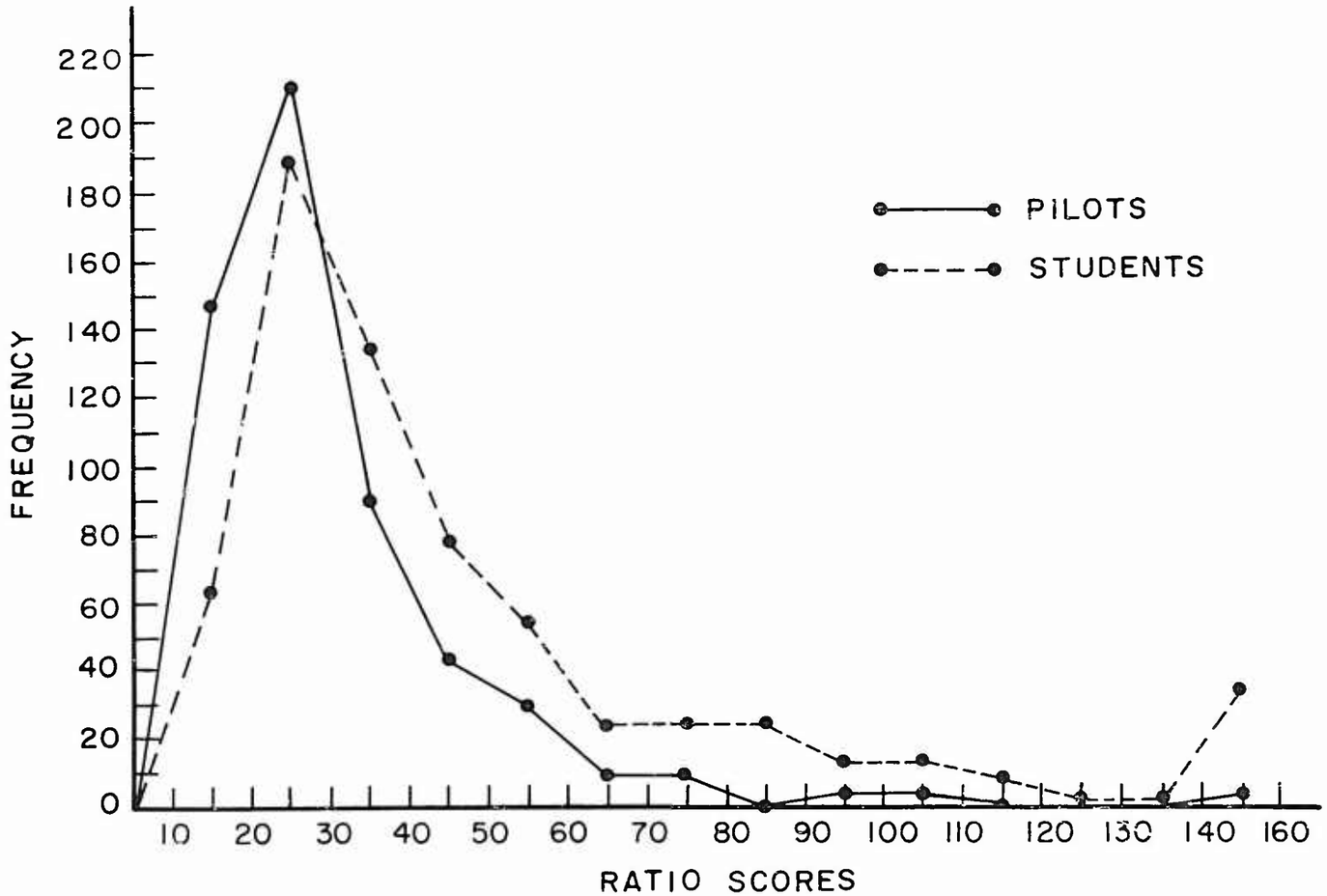

Figure 6. Frequency Distribution of Ratio Scores for All Trials
Blocks of 10 Ratio Scores

SECTION III

RESULTS

A graphic representation of the two-dimensional task data is shown in figure 7. The data of the student groups indicate that the order of part training and control/display relationship are not important variables in the acquisition of this control skill. When the student groups were compared statistically using the analysis variance (table I), only the main trial effects were significant. To evaluate the student groups at or near asymptotic level, an analysis of variance was performed comparing the groups over the last eight trials. The analysis (table II) indicated that, contrary to the findings of table I using all of the data, the outside-in control/display relationship was superior. Neither the trials nor order of part training variables were significant over the last eight trials.

The data also show that the differences between the pilot group and the student groups diminishes as training proceeds. Two of the student groups, C and D, approach very closely the pilots' skill level. An analysis of variance performed on student group C vs the pilot group (table III) shows the pilots to be superior when compared over the entire series of trials. Since the trials by groups interaction was significant, a t-test comparing the pilots with student group C on the last four-trial block was conducted and showed no significant difference. (See table IV.) A t-test comparing the pilots and student group D also showed no significant difference.

A comparison of skill acquisition for student group C and the test pilots on time and fuel separately are shown in figures 8 and 9. The learning curves for the fuel and time scores are parallel in both the pilots and student group C. However, the pilots appear to asymptote on fuel score much earlier than the students. The pilots' curves are not as closely parallel in the later trials because they have not reached asymptote on the time score. Student group C is typical of all the student groups.

Analysis of the part task training (fig. 10) shows that the level of difficulty of pitch and roll are practically identical. There is also a strong indication that familiarization on one dimension positively transfers to the other dimension.

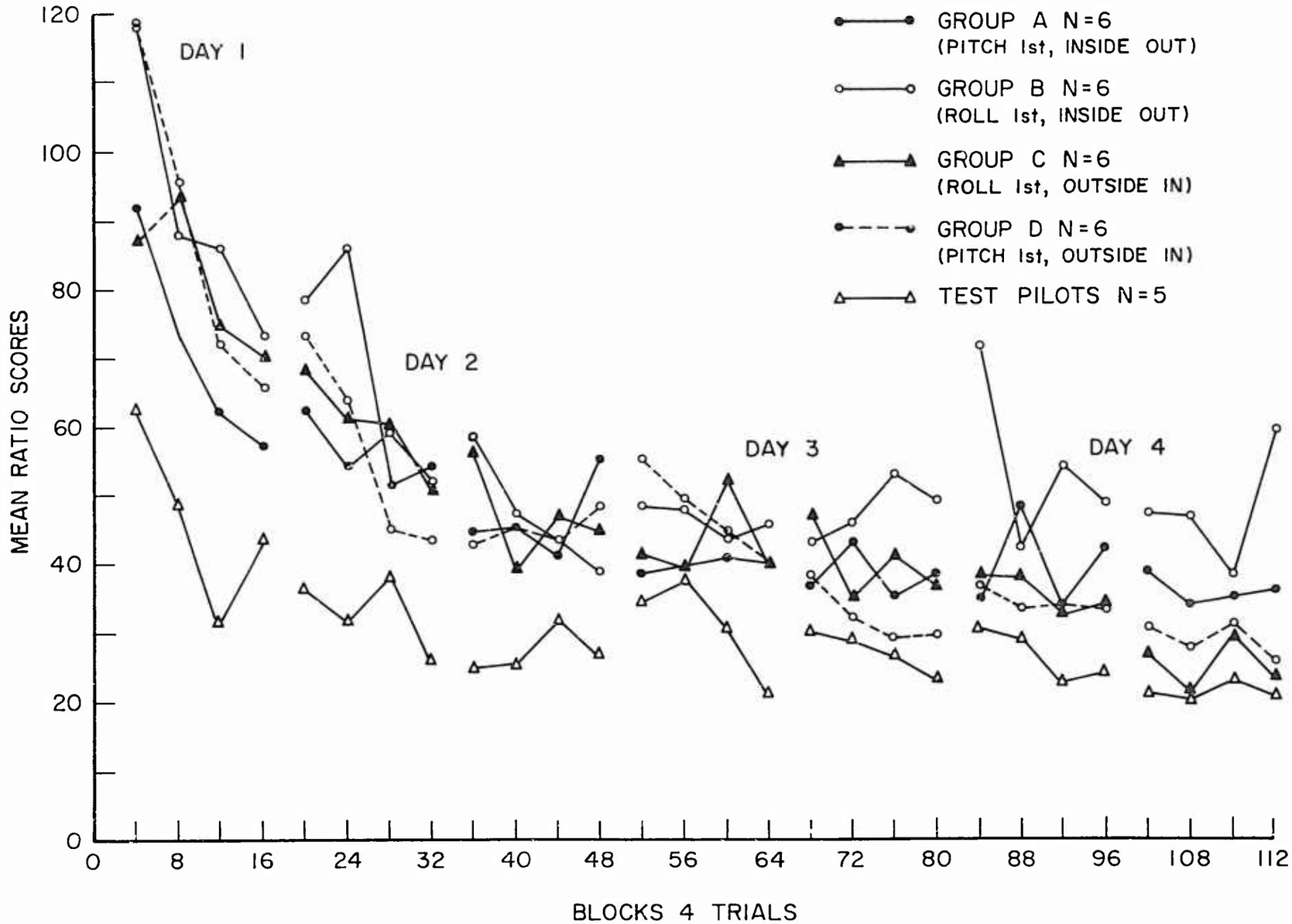

Figure 7. Comparison of Students and Pilots on Two-Axis Control Task

TABLE I

ANALYSIS OF VARIANCE FOR STUDENT GROUPS OVER ALL TRIALS (TWO-DIMENSIONAL TASK)

Source	df	MS	F
C/D Relationship Order	1	61,813	.99
Part Training	1	75,163	1.24
C/D x Order	1	79,932	1.29
Error	20	61,902	
Trials	27	110,925	27.53*
Trials x C/D	27	5,877	1.45
Trials x Order	27	4,079	1.01
Trial x C/D x Order	27	6,245	1.51
Error (within)		4,030	

*Significant .01 Level

TABLE II

ANALYSIS OF VARIANCE COMPARING STUDENT GROUPS ON LAST 8 TRIALS (TWO-DIMENSIONAL TASK)

	df	MS	F
Between Subjects	23		
C/D (Error)	1	11,256.70	6.47*
Order (Error)	1	2,154.70	1.24
C/D x Order (Error)	1	1,974.80	1.14
Error	20	1,738.65	....
Within Subjects	168		
Trials (w)	7	299.62	.66
Trials x C/D (w)	7	874.45	1.92
Trials x Order (w)	7	196.94	.43
Trials x C/D x Order (w)	7	705.98	1.55
Error (w)	140	456.08	

*Significant .01 Level

TABLE III

SUMMARY OF THE ANALYSIS OF VARIANCE

ONE GROUP OF STUDENTS VS ONE GROUP OF PILOTS

Source	Sum of Squares	df	Mean Squares	F Ratio	p
Groups	350,221.74	1	350,221.74	29.11	0.01
Ss within Groups	108,283.45	9	12,031.49		
Trials	1,050,214.35	27	38,896.83	14.00	0.01
Trials x Groups	224,490.62	27	8,314.47	2.99	0.01
Trials x Ss within Groups	675,269.59	243	2,778.89		

TABLE IV

A COMPARISON OF STUDENTS AND PILOTS ON

LAST FOUR-TRIAL BLOCK

GROUPS	X_1	X_2	t	sig
Pilots vs C	24.1	21.1	1.42	.20
Pilots vs D	31.4	21.1	1.31	.10

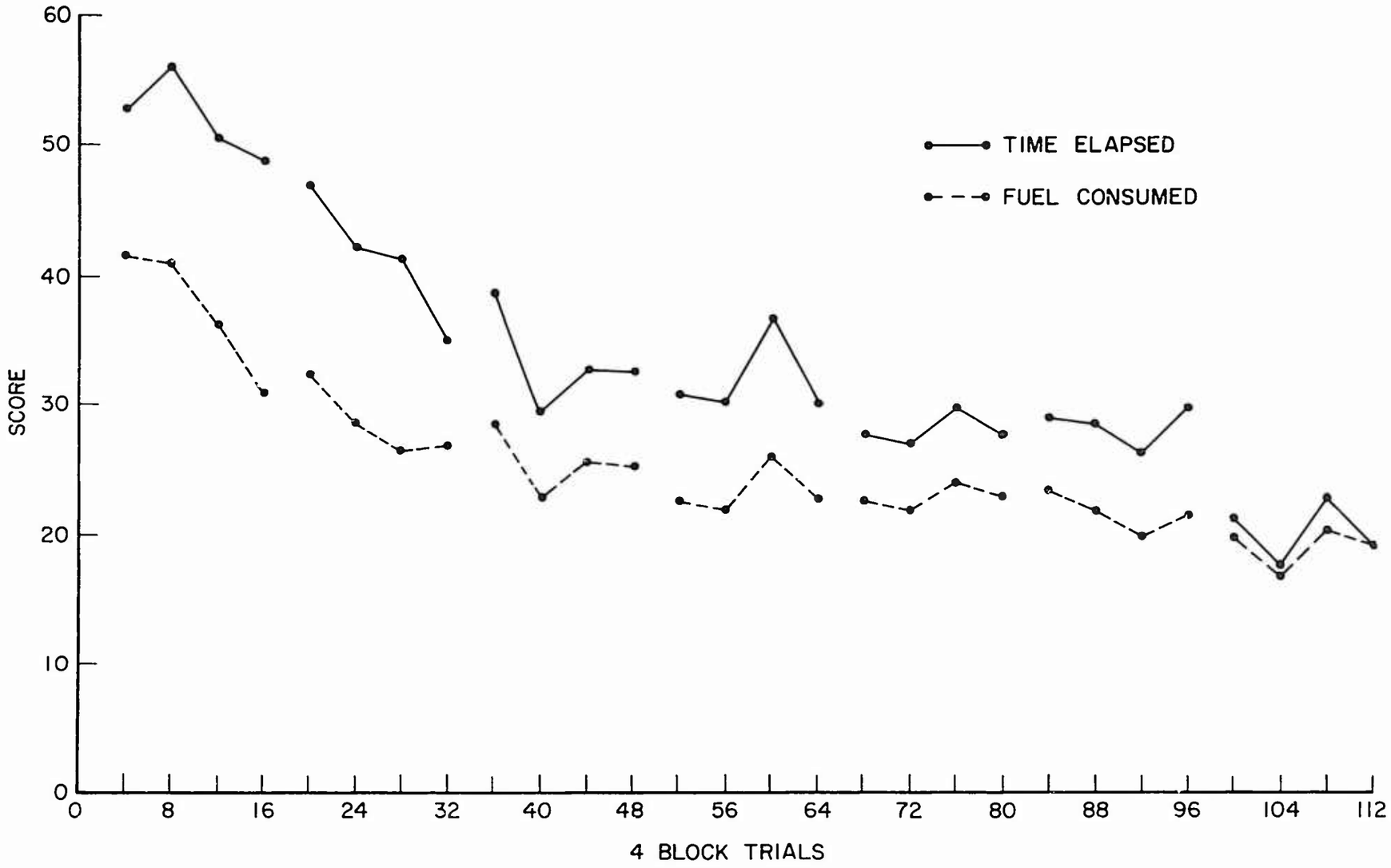

Figure 8. Skill Acquisition on Fuel and Time (Group C)

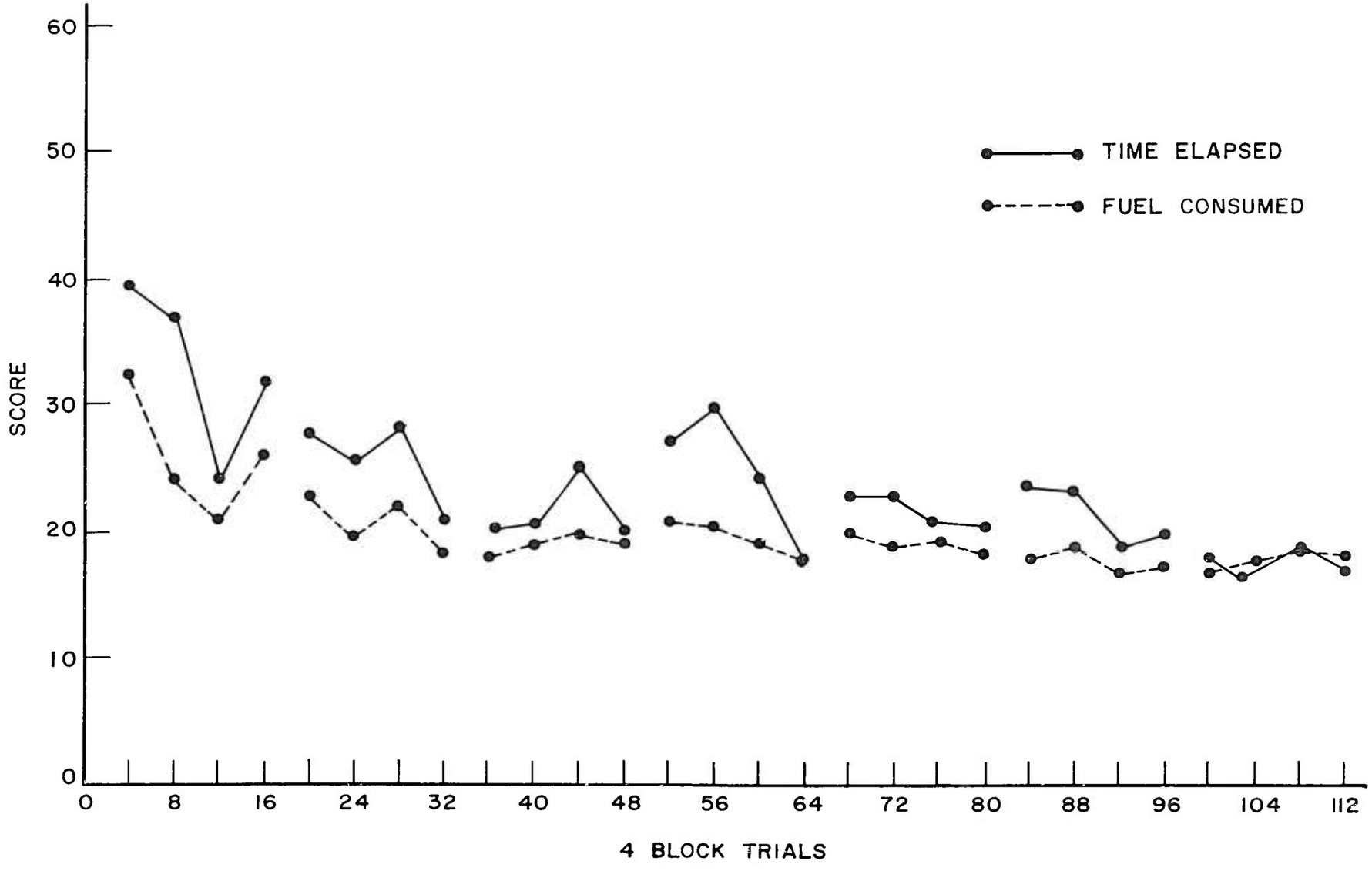

Figure 9. Skill Acquisition on Fuel and Time (Pilots)

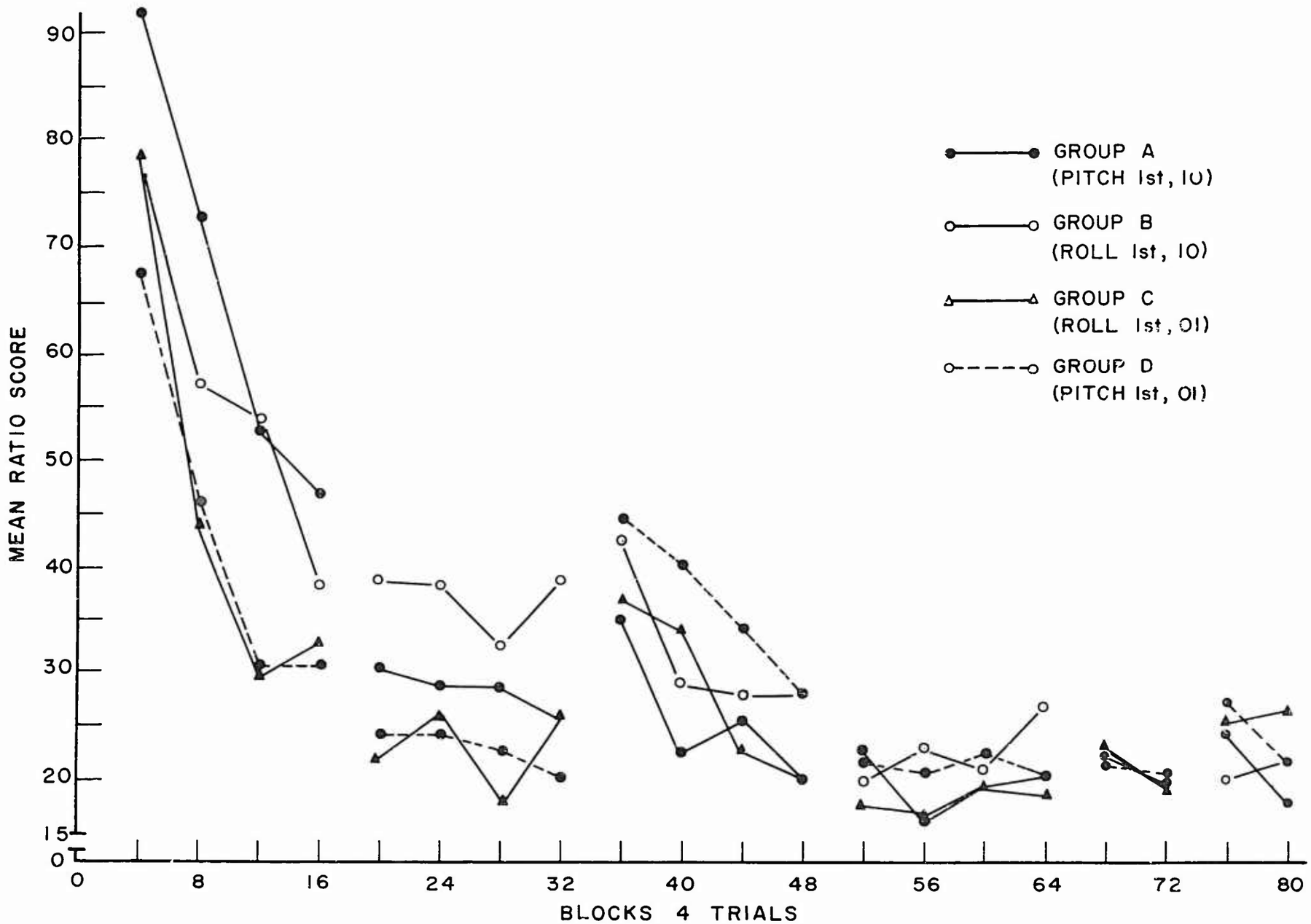

Figure 10. Mean Ratio for Four Trial Blocks on Part Task Training

SECTION IV

DISCUSSION

In spite of the fact that there are many apparent dissimilarities between the pilot's task in controlling the aircraft vs the space vehicle, the experiment suggested no negative transfer effects either in the acquisition data or in any qualitative factors observed during the conduct of the experiment. In fact, the experimental data suggested that the pilot group benefited from their prior experience as pilots. Part of this beneficial result is probably due to the prior experience in controlling both aircraft and simulators transferring to any task involving controls and displays—in other words, a familiarity with the general situation independent of the specific skills required. Also involved is the more specific skill of having manipulated two-axis controllers before entering the experimental situation, whereas the students have not had this experience. Furthermore, the pilots were familiar with the particular display used in the experiment, the MM-4 attitude indicator, which is used in many Air Force operational aircraft. Another specific experiential factor that benefits the pilot is his background in integrating primary and secondary displays as in instrument flying and in some emergency situations. The pilots quickly made use of the rate meters in accomplishing the criterion task. In the case of the student groups, particularly those subjects who had difficulty in the early trials, most of the high scores were traced to the subject's failure to use the rate meters, causing control reversals and overshooting the target attitude. Thus, we see many aspects of the experimental situation that favor the pilot. In addition, the pilots were a product of a selection procedure that was based, at least in part, on aptitude for such tasks.

The task variable that seemed to give the pilot group the most difficulty was the sensitivity of the system. The most frequent error made by the pilots was over controlling. This was also true of the student group once instrument integration was mastered. Having to take out control inputs in an equal and opposite fashion to stabilize the display at a given attitude was the other feature of the task that gave the pilots some difficulty, as well as the students. The pilots also expressed some dissatisfaction because the breakout forces of the control were too small in contrast to those generally encountered in aircraft. There were also cross-coupling problems encountered by both pilots and students resulting mostly from sudden movements in the pitch dimension when the subject's arm was not properly positioned in the armrest. In general those aspects of the task that were difficult for the pilots were also difficult for the students.

The fact that the differences between the students and pilots were appreciable in the early phases of the training and diminished in the later trials is attributed to the pilot experiential factors discussed earlier, i.e., the beneficial effects of prior experience were washed out as the amount of training increased. This result is true only when the pilots are compared with the two better performing student groups. The diminishing difference between these groups is also interpreted to mean that, as the amount of training of student groups increases, the degree to which one may use the data to generalize to a pilot population increases. The convergence of the students' data and the pilots' data also indicates that, while the pilot initially has an advantage in this type of task, his advantage can be overcome with training. It also indicates that training, for at least the attitude control phase of space flight, may well be feasible for the nonpilot.

Although the pilots' learning curve appears to asymptote at approximately the 100th trial, this does not necessarily indicate that no further improvement in performance is occurring. A closer examination of the data shows that, even though the mean does not change over the last 16 trials, the standard deviation continues to decrease and exhibit a downward trend at the end of training, indicating an increase in reliability and predictability of performance. (See fig. 11.) Such a measure is particularly useful when information about consistency of performance is required. An example of such a situation would be where a man must back up a fallible automatic system, and his absolute minimal predictable performance must be adequate for a successful mission. When the variability measure is taken into account, the skill levels of even the better student groups is not quite as close to the pilots' performance as when only the means are compared. In terms of reliability, then, the pilots are even more superior. An illustration of this can be seen by comparing figure 7 with figure 12. Figure 12 shows a plot of the mean (.99 prob.) scores which were computed in the following manner:

a. Subject's individual mean score is computed for a four-trial block.

b. Subject's individual SD is computed for a four-trial block.

c. SD is multiplied by 3.1 (value of Z for .99 L.O.C.)

d. c is added to a, yielding .99 prob. of the highest score subject will obtain in that block.

The comparisons within the student subgroups pose some interesting questions (fig. 7). As training progresses, the effects of the type of control/display relationship become noticeable. Why the effects of this variable do not show up until late in training is not clear. However, several explanations are possible: (1) variability due to trial effects and lack of skill may obscure these differences early in training; (2) sampling error or high variability of one or two subjects within the group may produce most of the discrepancy; and (3) negative transfer effects may show up late in training. The third explanation is considered highly unlikely. The second does show some promise in that two of the subjects appear to be somewhat different from the others, but not enough to be statistically significant as tested by the ω/σ statistical procedure, described by Dixon and Massey (ref 7). In the opinion of the author, the high variability characteristic of early learning obscures the differences that show up later. The finding that this type of control/display relationship is favorable for the naive subject is not new (refs 1 through 4). However, these earlier data were gathered on tasks involving the tracking of a forcing function and were rate control tasks. The vehicular control task used in this study did not use a forcing function and involved acceleration control. Although the experimental data favor an outside-in type of display for this type of task on nonpilot subjects, more extensive training probably would eliminate any differences. Gardner (ref 4) reports that his subjects did not overcome such a disadvantage. However, his subjects were trained over 40 trials, which is probably an insufficient amount of training to overcome unfavorable control/display relationships. Data reported by Cotterman (ref 8) indicated that order of part training may interact with control/display relationship, but the present experiment did not indicate that such was the case.

The part training of the single dimensions, apart from assessing order effects, was extremely useful for this type of task. In the first place, the vehicular control task used here is very difficult and confusing initially and many smaller skills have to be learned, e.g., use of meters, developing efficient scanning patterns, and using the

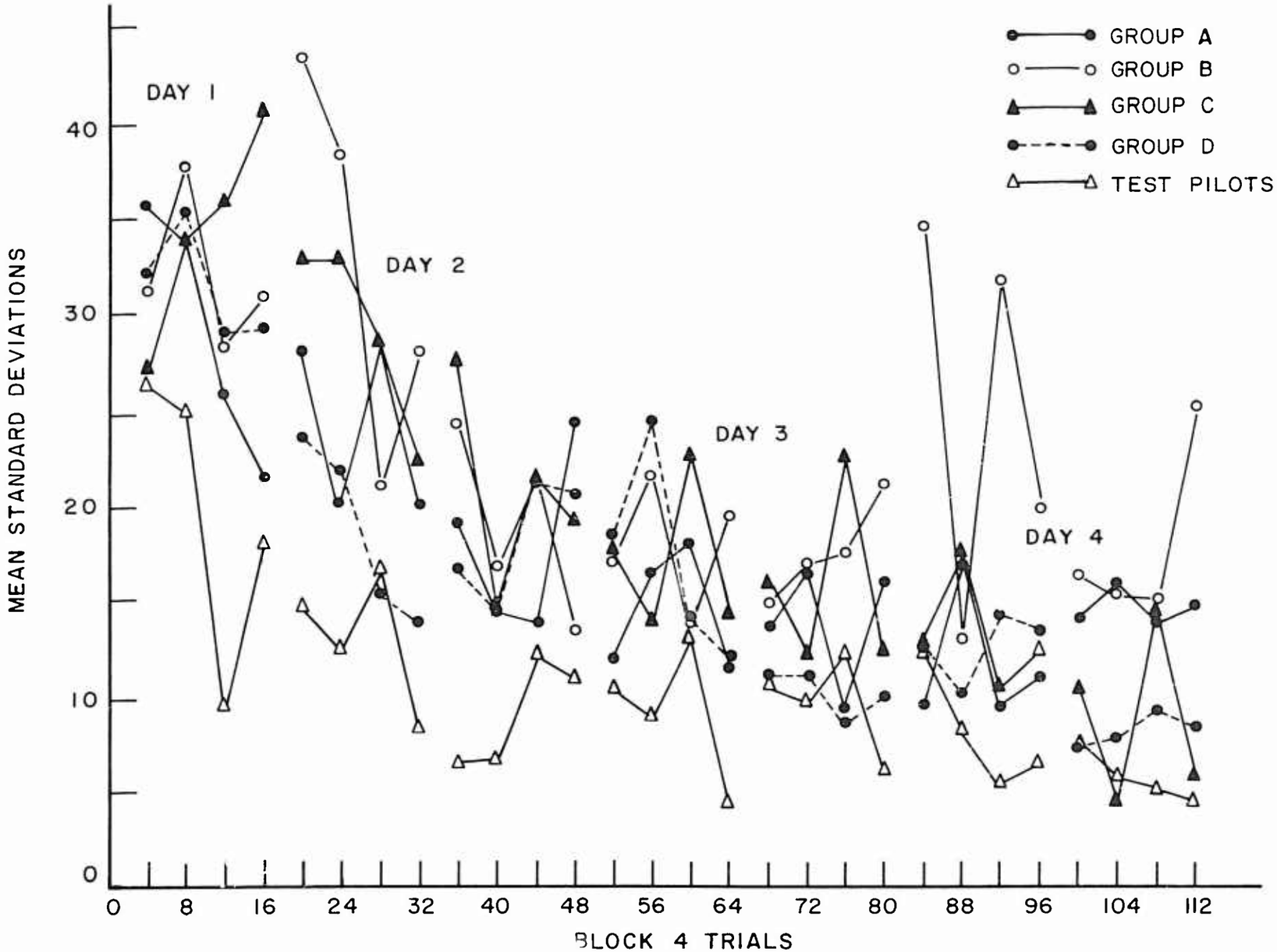

Figure 11. Comparison of Students and Pilots SD on Two-Axis Control Task

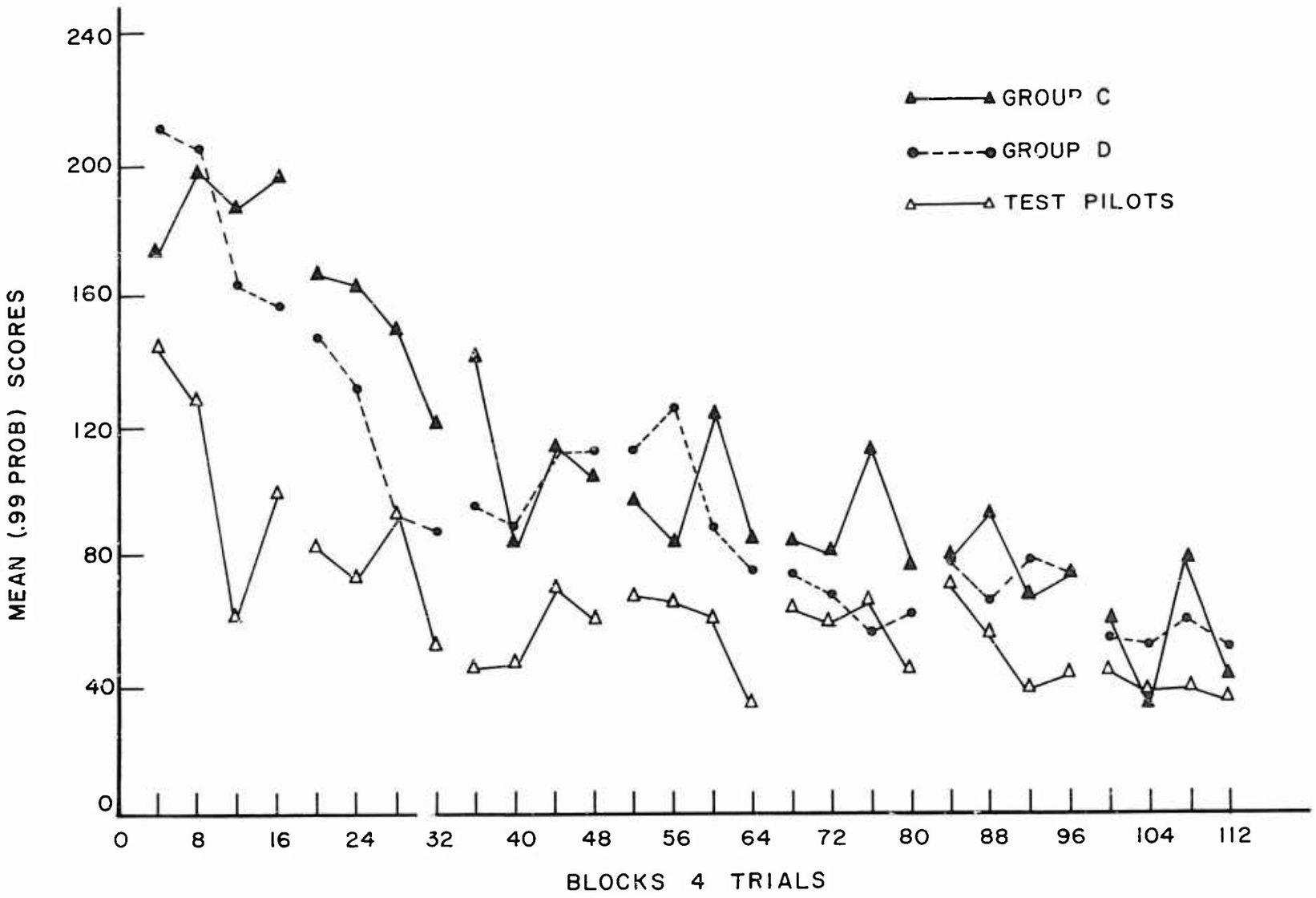

Figure 12. Comparison of Students and Pilots Mean Scores on Two-Axis Control Task

control. How the subject performs also depends on his adaptability to the new situation, understanding of instructions, learning "how things work" and other variables of a transient nature that are frequently irrelevant to the experimenter's investigation, but may affect early phases of the experiment. A period of preliminary learning prior to the whole task presentation reduces confusion in the subject and also decreases intra-subject variability prior to training. This reduction in error variance makes later experimental comparisons more precise. For example, during the preliminary training there were several instances of "insight learning" of the use of the rate meters on the part of the students. This caused sudden changes in technique of solving the problem that could confound results had this insight occurred during whole task training. The beneficial transfer effects from one dimension to the other on the part task training are probably due to becoming familiar with the apparatus, the principles involved in acceleration control, and the extraction of information from such a display.

An interesting finding on the one- vs two-axis task was that following part training on each dimension the subject's score on the two-dimensional task was not the sum of his average scores on the single dimensions or even close to it. One might expect a simple summation to be the case, since the two-dimensional task was typically attacked one dimension at a time. The nonaddativity is illustrated in figure 13 in the pilots' data and also holds true for the other groups. Thus part task training does not completely transfer to the whole task; and the whole in this case is not the sum of the parts. Of course, there were many instances in which subjects would lose the first axis while putting the second on target, which would account for the disproportionately higher scores on the two-dimensional task. There were also instances where the subject would attempt to control both dimensions at the same time, which was almost always unsuccessful except toward the end of training, and even then, if the subject did not succeed in his first attempt, he would ultimately get an inordinately high score. One of the pilot subjects consistently controlled both dimensions at once; he received a relatively greater number of low scores, but he also showed the most variability in his performance.

An interesting sidelight to the experiment was the observation that there was a great deal of variability in the way the pilots used the primary display. Some subjects flew to the horizon while others flew the case around the instrument, indicating that a display is not always used the way the designer anticipates. Two of the pilots also commented that the lack of motion cues sometimes led to control reversals.

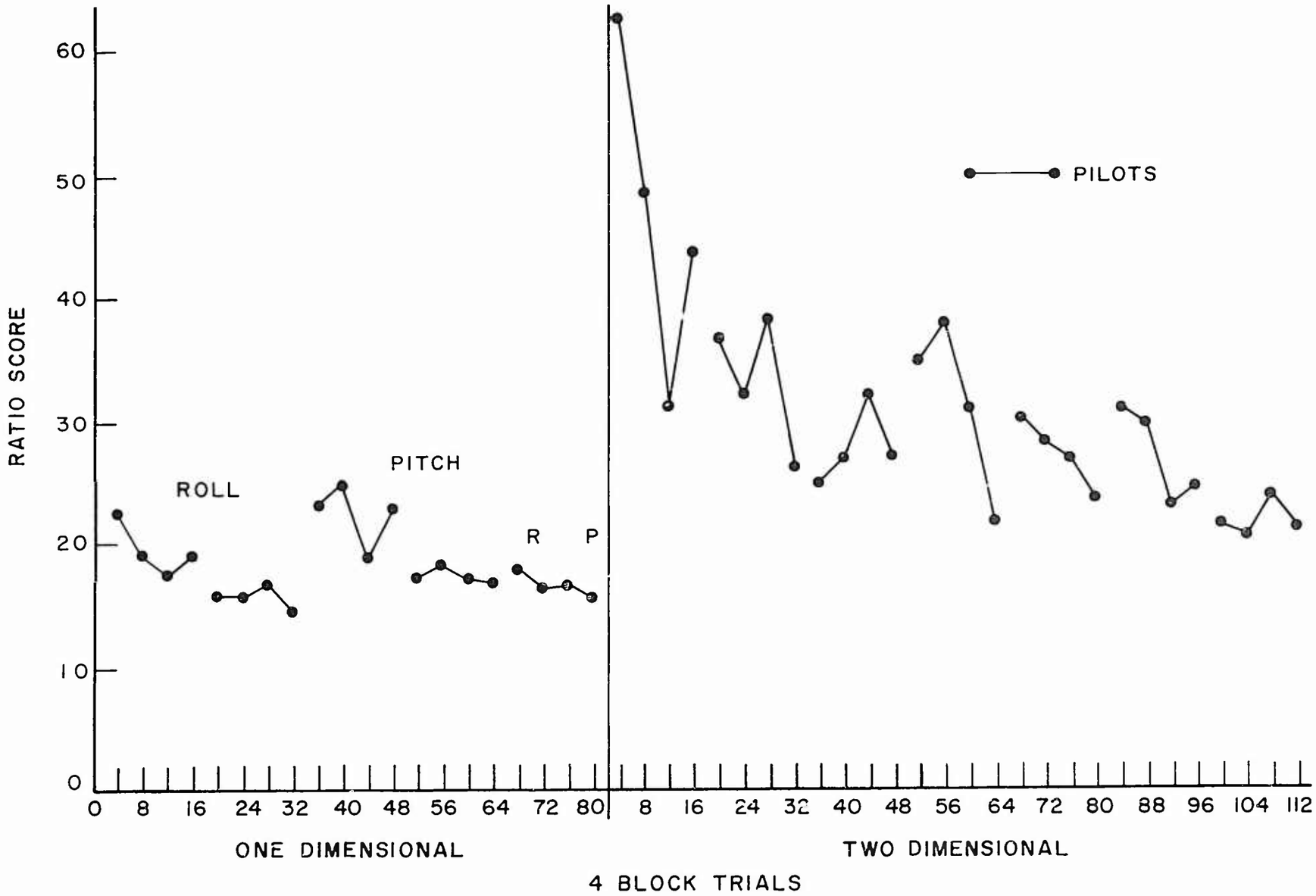

Figure 13. Comparison of One- and Two-Dimensional Tasks

SECTION V

CONCLUSIONS

1. There appears to be more positive transfer than negative transfer effects in transitioning from flying aircraft to a simulated inertial control task.

2. The degree to which generalizations can be made from students to pilots on this type of task depends on:

a. The amount of training—the more training trials the greater the degree of generalization recommended.

b. Optimal training conditions for the students—in this case using "outside-in" rather than "inside-out" displays, although the amount of training probably determines this requirement.

3. Previously untrained subjects can achieve skill levels comparable to pilots on this type of task, although it takes more trials for the nonpilot to do so.

4. Order of part training on this kind of task does not appear to be an important variable in training.

REFERENCES

1. Loucks, R. B., Interpretation of Azimuth Indicators by Novices: I. Aircraft Direction Indicators with Fixed Lubber Lines and Azimuth Cards that Turn, AF Technical Report No. 5957, Air Materiel Command, Wright-Patterson Air Force Base, Ohio, March 1950 (ATI 75 414).

2. Loucks, R. B., The Interpretation of Azimuth Indicators by Novices: II. Aircraft Indicators with Full-Scale Azimuth Cards that Turn, AF Technical Report No. 5965, Air Materiel Command, Wright-Patterson Air Force Base, Ohio, March 1950 (ATI 70 935).

3. Grether, W. F., Direction of Control in Relation to Indicator Movement in One Dimensional Tracking, USAF Air Materiel Command Memorandum Report No. TSEAA-694-4G, Wright-Patterson Air Force Base, Ohio, 10 October 1947.

4. Gardner, J. F., The Effect of Motion Relationship and Rate of Pointer Movement on Tracking Performance, WADC Technical Report 57-533, Wright Air Development Center, Wright-Patterson Air Force Base, Ohio, September 1957 (AD 131 002).

5. Winer, B. J., Statistical Principles in Experimental Design, McGraw-Hill Book Company, Inc., New York, N.Y., 1962.

6. Lindquist, E. F., Design and Analysis of Experiments in Psychology and Education, Houghton Mifflin Co., Boston, Mass., 1956.

7. Dixon, W. J., and F. J. Massey, Introduction to Statistical Analysis, McGraw-Hill Book Company, Inc., New York, N.Y., 1957.

8. Cotterman, T. E., Interaction of Compatible and Incompatible Stimulus-Response Relations in Learning Situations, Masters Thesis, Ohio State University, Columbus, Ohio, 1953.

BIBLIOGRAPHY

1. Edwards, A. L., Experimental Design in Psychological Research, Rinehart and Company, Inc., New York, N.Y., 1960.

2. Fitts, P. M., and R. E. Jones, Psychological Aspects of Instrument Display. I. Analysis of 270 "Pilot-Error" Experiences in Reading and Interpreting Aircraft Instruments, USAF Air Materiel Command Memorandum Report No. TSEAA-694-12A, Wright-Patterson Air Force Base, Ohio, 1 October 1947.

3. Fitts, P. M., R. E. Jones, and J. L. Milton, Pilot Reaction Time: A Study of the Time Required by Pilots to Comprehend and React to Contact and Instrument Recovery Problems, USAF Air Materiel Command Memorandum Report No. TSEAA-694-13A, Wright-Patterson Air Force Base, Ohio, 26 May 1947.

4. Gardner, J. F., Direction of Pointer Motion in Relation to Movement of Flight Controls, AF Technical Report No. 6016, Wright-Patterson Air Force Base, Ohio, June 1950 (ATI 81 459).

5. Grether, W. F., Discussion of Pictorial versus Symbolic Aircraft Instrument Displays, Air Materiel Command Memorandum Report No. MCREXD-694-8B, Wright-Patterson Air Force Base, Ohio, 4 August 1947.

6. Loucks, R. B., An Experimental Study of the Effectiveness with Which Novices Can Interpret a Localizer - Glide Path Approach Indicator, USAF Air Materiel Command Technical Report No. 5959, Wright-Patterson Air Force Base, Ohio, October 1949 (ATI 66 069).

7. Smith, W. M., and W. E. Kappauf, Studies Pertaining to the Design and Use of Visual Displays for Aircraft Instruments, Computers, Maps, Charts and Tables, Air Materiel Command Memorandum Report No. TSEAA-694-1G, Wright-Patterson Air Force Base, Ohio, 30 June 1947.

Security Classification

DOCUMENT CONTROL DATA - R&D

(Security classification of title, body of abstract and indexing annotation must be entered when the overall report is classified)

1 ORIGINATING ACTIVITY *(Corporate author)* Aerospace Medical Research Laboratories Aerospace Medical Division, Air Force Systems Command, Wright-Patterson AFB, Ohio 45433	2a REPORT SECURITY CLASSIFICATION UNCLASSIFIED 2b GROUP N/A

3 REPORT TITLE

THE EFFECT OF PRIOR EXPERIENCE ON ACQUIRING SKILL ON A SIMULATED INERTIAL CONTROL TASK

4 DESCRIPTIVE NOTES *(Type of report and inclusive dates)*

5 AUTHOR(S) *(Last name, first name, initial)*

Geiselhart, Richard

6 REPORT DATE	7a TOTAL NO OF PAGES	7b. NO. OF REFS
July 1966	26	8

8a CONTRACT OR GRANT NO. b PROJECT NO 1710 c Task no. 171003 d	9a ORIGINATOR'S REPORT NUMBER(S) AMRL-TR-66-25 9b. OTHER REPORT NO(S) *(Any other numbers that may be assigned this report)*

10 AVAILABILITY/LIMITATION NOTICES

Distribution of this document is unlimited

11. SUPPLEMENTARY NOTES	12. SPONSORING MILITARY ACTIVITY Aerospace Medical Research Laboratories Aerospace Medical Division, Air Force Systems Command, Wright-Patterson AFB, Ohio

13 ABSTRACT

The performance of test pilots and college student subjects in acquiring the skill to control the attitude of a simulated space vehicle was compared. The purpose of the comparison was to investigate transfer of training to this type of task as a function of prior pilot experience and determine the degree to which one may generalize from students to pilots. There was also a further breakdown of the student group into experimental subgroups to assess the effects of type of control/display relationship and the order of part training on the acquisition of the vehicular control task. The secondary comparisons within the student group were to determine optimal training conditions to make the comparison with the pilots as equitable as possible. The conclusions based on the results of the study were (1) there appear to be more positive transfer effects than negative in transitioning from flying aircraft to a simulated inertial control task; (2) the degree to which generalizations can be made from students to pilots depends on the amount of training given the students provided an optimal control/display relationship is used; (3) previously untrained subjects can achieve skill levels comparable to pilots on this type of task, but it takes more trials for the nonpilot to do so; (4) order of part training does not appear to be an important variable in training on this type of task.

DD FORM 1 JAN 64 1473

Security Classification

Security Classification

14 KEY WORDS	LINK A ROLE	LINK A WT	LINK B ROLE	LINK B WT	LINK C ROLE	LINK C WT
Training						
Controls						
Transfer of training						
Space vehicles						
Learning						
Perceptual motor skills						

INSTRUCTIONS

1. ORIGINATING ACTIVITY: Enter the name and address of the contractor, subcontractor, grantee, Department of Defense activity or other organization *(corporate author)* issuing the report.

2a. REPORT SECURITY CLASSIFICATION: Enter the overall security classification of the report. Indicate whether "Restricted Data" is included. Marking is to be in accordance with appropriate security regulations.

2b. GROUP: Automatic downgrading is specified in DoD Directive 5200.10 and Armed Forces Industrial Manual. Enter the group number. Also, when applicable, show that optional markings have been used for Group 3 and Group 4 as authorized.

3. REPORT TITLE: Enter the complete report title in all capital letters. Titles in all cases should be unclassified. If a meaningful title cannot be selected without classification, show title classification in all capitals in parenthesis immediately following the title.

4. DESCRIPTIVE NOTES: If appropriate, enter the type of report, e.g., interim, progress, summary, annual, or final. Give the inclusive dates when a specific reporting period is covered.

5. AUTHOR(S): Enter the name(s) of author(s) as shown on or in the report. Enter last name, first name, middle initial. If military, show rank and branch of service. The name of the principal author is an absolute minimum requirement.

6. REPORT DATE: Enter the date of the report as day, month, year; or month, year. If more than one date appears on the report, use date of publication.

7a. TOTAL NUMBER OF PAGES: The total page count should follow normal pagination procedures, i.e., enter the number of pages containing information.

7b. NUMBER OF REFERENCES: Enter the total number of references cited in the report.

8a. CONTRACT OR GRANT NUMBER: If appropriate, enter the applicable number of the contract or grant under which the report was written.

8b, 8c, & 8d. PROJECT NUMBER: Enter the appropriate military department identification, such as project number, subproject number, system numbers, task number, etc.

9a. ORIGINATOR'S REPORT NUMBER(S): Enter the official report number by which the document will be identified and controlled by the originating activity. This number must be unique to this report.

9b. OTHER REPORT NUMBER(S): If the report has been assigned any other report numbers *(either by the originator or by the sponsor)*, also enter this number(s).

10. AVAILABILITY/LIMITATION NOTICES: Enter any limitations on further dissemination of the report, other than those imposed by security classification, using standard statements such as:

(1) "Qualified requesters may obtain copies of this report from DDC."

(2) "Foreign announcement and dissemination of this report by DDC is not authorized."

(3) "U. S. Government agencies may obtain copies of this report directly from DDC. Other qualified DDC users shall request through _____."

(4) "U. S. military agencies may obtain copies of this report directly from DDC. Other qualified users shall request through _____."

(5) "All distribution of this report is controlled. Qualified DDC users shall request through _____."

If the report has been furnished to the Office of Technical Services, Department of Commerce, for sale to the public, indicate this fact and enter the price, if known.

11. SUPPLEMENTARY NOTES: Use for additional explanatory notes.

12. SPONSORING MILITARY ACTIVITY: Enter the name of the departmental project office or laboratory sponsoring *(paying for)* the research and development. Include address.

13. ABSTRACT: Enter an abstract giving a brief and factual summary of the document indicative of the report, even though it may also appear elsewhere in the body of the technical report. If additional space is required, a continuation sheet shall be attached.

It is highly desirable that the abstract of classified reports be unclassified. Each paragraph of the abstract shall end with an indication of the military security classification of the information in the paragraph, represented as *(TS)*, *(S)*, *(C)*, or *(U)*.

There is no limitation on the length of the abstract. However, the suggested length is from 150 to 225 words.

14. KEY WORDS: Key words are technically meaningful terms or short phrases that characterize a report and may be used as index entries for cataloging the report. Key words must be selected so that no security classification is required. Identifiers, such as equipment model designation, trade name, military project code name, geographic location, may be used as key words but will be followed by an indication of technical context. The assignment of links, rules, and weights is optional.

Security Classification