AD640840

AFCRL-66-637

CONTRACT
AF 61(052)-781

March 1966

ANNUAL SUMMARY REPORT NUMBER 2

INCORPORATING

SCIENTIFIC REPORT NUMBER 3

DETERMINATION OF AIR DENSITY, TEMPERATURE AND WINDS AT HIGH ALTITUDES

CLEARINGHOUSE
FOR FEDERAL SCIENTIFIC AND
TECHNICAL INFORMATION

Hardcopy	Microfiche		
$3.00	$ .50	55 pp	

ARCHIVE COPY

G. V. GROVES

R. W. PROCUNIER

D. P. McDERMOTT

D. REES

Department of Physics
University College London
England

OCT 20 ...

Distribution of this document is unlimited.

The research reported in this document has been sponsored by, or in part by, the Cambridge Research Laboratories, OAR, through the European Office of Aerospace Research, United States Air Force.

C O N T E N T S

		Page
Chapter I	Summary Report by G. V. Groves	
	1. Introduction	1
	2. Development of techniques	1
	3. Synoptic wind and temperature studies	2
	4. Summary of field operations 1965-66	3
Chapter II	Payloads for wind and temperature measurement by G. V. Groves	
	1. Uses of grenades in Skylark	6
	2. Use of small grenades (type BA)	6
	3. The Nike-Cajun/Apache grenade bay and its applications	7
	4. Liquid trimethyl aluminium (TMA) and grenades	7
	5. ESRO Sardinia launchings, September-October 1965	10
	6. Nike-Cajun/Apache launchings, Pakistan March 1966	10
Chapter III	A Multiplex system for acoustic recording by R. W. Procunier	
	1. Introduction	14
	2. System requirements	15
	3. Description of equipment	18
	4. Field use	23
Chapter IV	The optical triangulation of grenades for the Sardinia firings in September 1965 by D. P. McDermott	
	1. Introduction	29
	2. F24 camera coverage	29
	3. Camera operation and monitoring	33
	4. Preliminary results	34
Chapter V	Specialised optical studies by D. Rees	
	1. Introduction	36
	2. Experimental techniques	36
	3. Theoretical aspects	41
	4. Experimental data	44

University College London Personnel

Space Science and Atmospheric Structure Research

Ashman, C. A.	Senior Technician
Groves, G. V., Ph.D.	Project Supervisor
Harris, Miss A.	Secretarial and Computing Assistant
McDermott, D. P.*	Research Assistant
Norman, Miss J. P.*	Computing Assistant
Palmer, Mrs. M. A.	Computing Assistant
Potter, E. A.	Senior Technician
Procunier, R. W.	Research Assistant
Scott, A. F. D.	Administrative Assistant
Storr, T. A.	Chief Technician
Waters, Miss B. M.	Computing Assistant

Research Students

Rees, D.	Ph.D.
Kasenally, H.	Ph.D.
Makarious, S. H.	Ph.D.
Choudhury, M. A. M.	Ph.D.
Curnow, R. J.	M.Sc.
Wells, R. A.	M.Sc.
Daltrey, R. A.*	M.Phil.
Jeffries, A. J.	M.Phil.

Space Science Diploma Students

Arias Sanchez, J. A.
Horton, T. (part-time)
Hyson, P.
Jeffries, A. J. (part-time)
Millard, R. K.
Nejad, M. S.
Pfeffer, H. A.
Punter, T. J. (part-time)
Ricketts, S. E.
Scott, A. F. D.
Taborda, J. F. da R.
Webb, G. M. (part-time)

*Contract AF 61(052)-781 personnel

(a)

(b)

Sardinia Programme 1965

Figures (a) and (b) show SE08 at 120 and 260 seconds respectively.

Grenade glow clouds and TMA trail (also sunlit rocket) can be seen against the background stars of Canis Major and Orion. The effects of sunlight above 130 km and of diffusion are very conspicuous.

BLANK PAGE

Chapter I Summary Report

G. V. Groves

1. Introduction

The main objectives of UCL Neutral Atmosphere Research are:

(1) To develop techniques for extending wind and temperature measurements to great heights, particularly above 90 km.

(2) To contribute to synoptic wind and temperature studies through collaborative programmes with other groups.

Work under (1) is supported by U.S.A.F. Contract AF 61(052)-781, "Determination of air density, temperature and winds at high altitudes"; and that under (2) by a Science Research Council Grant "Synoptic rocket programme of wind and temperature measurements". In many ways (1) and (2) are complementary and every opportunity is taken to combine projects for their mutual advantage.

2. Development of techniques

Between 60 and 200 km lies the least explored atmospheric region.[1] Satellites can operate at greater heights and thousands of small meteorological rockets have been launched into the lower region. The intermediate region can be covered only by the larger and more expensive research rocket, and data collection is limited by cost and by lack of suitable measuring techniques.

Wind profiles between 60 and 90 km number only 3 percent of those between 30 and 60 km. Wind measurements above 150 km can only be obtained by optical observations from the ground at twilight: for the 100 to 150 km region the observing period is still limited to night-time. Temperature measurements above 120 km have also been limited to the use of ground-based optics at twilight. Temperature data between 90 and 120 km have so far been too few and uncertain for any systematic interpretation, and the work of the UCL Group has been particularly concerned with this region.

A system of improved acoustical detection and recording has been developed, and an increase of over 20 km in the maximum height of grenade

detection was achieved in the ESRO Sardinia launchings in September/October 1965 (Chapter III). An account of previous design work and field evaluation at Woomera 1963 and Eglin 1965 has been prepared.[2] Further analysis of acoustic records by filtering of magnetic tape playback is in progress. Now that the design of the transmission and recording system is finalized, the equipment will be mounted for regular operational use at launching sites.

Optical recording of grenade shock waves by photo-electric as well as photographic means was shown, at the Eglin and Sardinia launchings, to be a promising method of temperature measurement for the 100 to 140 km region (Chapter V). A grating spectrometer has been developed and successfully operated at the 1965 launchings on sunlit glows at twilight for temperature determination from the aluminium oxide vibrational and rotational band structure: a second instrument of increased resolution is ready for operation at 1966 launchings.

Considerable effort has also been involved in the preparation of framing cameras with monitoring of shutter operations for wind determination from trail and glow clouds, for grenade burst position determination and for diffusion studies (Chapter IV). This equipment was operated at the Sardinia launchings; and with the continuation of the ESRO atmospheric structure programme at Kiruna it may be used there in 1967 or at some other launch site.

3. <u>Synoptic wind and temperature studies</u>

The importance of synoptic measurements of upper atmosphere wind structure has been stressed by COSPAR, which has acted as coordinator for these activities between various countries. Within the last few years many new launching sites have opened up, and the need for more extensive observations has become generally realised.[3] U.K. participation has been supported by the British National Committee on Space Research and an S.R.C. grant has been provided to UCL for a two year programme, 1965 to 1967, of about 16 launchings of grenade

and grenade/TMA payloads (Chapter II). Six of these launchings, two in Sardinia with ESRO and four in Pakistan in collaboration with NASA and SUPARCO, have now taken place; a further two launchings are scheduled before the end of April 1966.

The importance of correlating upper atmosphere wind measurements on a global scale, and not only on a regional scale, has recently been emphasised by an analysis of S-N wind components.(4) The analysis shows that in the upper atmosphere global effects may be larger than regional ones, and this distinction needs to be realised, otherwise regional observations may be misinterpreted. The work is being extended as observational data accumulate.

4. Summary of field operations, 1965-66

4.1 Eglin, February 1965

Personnel: R. W. Procunier, D. Rees, T. A. Storr, C. A. Ashman

Equipment operated:

(a) 7 microphone array over a 20 km baseline feeding into the Multiplex acoustical recording system.

(b) Photomultiplier flash detector.

(c) Photographic and photo-electric equipment for shock-wave velocity measurement.

(d) An F24 camera and a scanning densitometer for trail diffusion studies.

(e) A spectrophotometer with an f3.6 12" objective mirror and 35 mm camera for trail tracking.

4.2 Pakistan, April 1965

Personnel: G. V. Groves, D. P. McDermott

Equipment operated:

(a) Two 5 microphone arrays each feeding into Sound Ranging Equipment Mk VII at two separate sites 25 km apart.

(b) Two photomultiplier flash detectors.

(c) One Bolex 16 mm cine camera.

4.3 Sardinia, September 1965

Personnel: G. V. Groves, R. W. Procunier, D. P. McDermott, D. Rees, H. Kasenally (Norwood Technical College), A. F. D. Scott, R. Curnow (Australian Department of Supply), R. A. Daltrey, T. A. Storr, C. A. Ashman, E. A. Potter, R. E. Jones, V. N. Way

Equipment operated:

(a) 8 microphone array over an 8 km baseline feeding into the Multiplex recording system.

(b) 2 photomultiplier flash detectors.

(c) Photographic and photo-electric equipment for shock-wave velocity measurement.

(d) K19 camera and photo-electric scanning densitometer for turbulence and diffusion studies.

(e) 12 F24 cameras and 3 ballistic cameras at 4 widely-separated camera sites.

(f) A spectrophotometer with an f3.6 12" objective mirror mounted with K19 and 35 mm cameras.

(g) TMA dispenser prelaunch pressurisation and arming.

(h) Skylark 24-grenade payload, prelaunch assembly, checkout and arming.

4.4 Pakistan, March 1966

Personnel: G. V. Groves, T. A. Storr, E. A. Potter

Equipment operated:

As in 4.2 plus assembly, prelaunch checkout and arming of Nike-Cajun and Nike-Apache payloads.

References

1. COSPAR Working Group IV, CIRA 1965, North-Holland Publishing Co., Amsterdam.

2. R. W. Procunier (1966) Measurements of atmospheric structure above 30 km using the grenade method and improved acoustic techniques. Thesis submitted for Ph.D. degree in the University of London.

3. G. V. Groves (1966) World-wide sounding rocket facilities, Spaceflight 8, 78.

4. G. V. Groves (1966) Diurnal and semi-diurnal S-N wind components in the upper atmosphere derived from rocket measurements, Paper accepted for presentation at the COSPAR International Symposium May 1966.

Chapter II Payloads for wind and temperature measurement

G. V. Groves

1. Use of grenades in Skylark

Acoustical grenades for upper atmosphere wind and temperature measurement were introduced into the British Rocket Programme at the time of its initiation in 1957. Launchings took place with the Skylark vehicle at the Woomera Range at a rate of 4 or 5 a year until 1965. The Skylark grenade payload as originally introduced held 18 standard (1 lb) aluminized grenades (type GW). At the second launching in 1958 the A10 glow reaction was discovered when a grenade was released at 130 km altitude enabling wind speed to be measured at this height at night for the first time.(1) Previously wind measurement at these heights had been limited to twilight periods.

In subsequent launchings, some 6 to 8 grenades were ejected for wind determination in the glow cloud region of 100 to 150 km altitude, thereby reducing the number of grenades that were available for acoustical studies at lower heights. Consideration was therefore given to increasing the number of grenades carried. The most readily available solution was to install two grenade bays in the payload instead of one, thereby doubling the number of grenades to 36, and this was done in the 1963 and 1965 series of launchings. At the same time, attention was given to economising payload size and weight by the use of a smaller grenade at lower heights where the signal from the standard (1 lb) grenade was clearly in excess of needs.

2. Use of small grenades (type BA)

Theoretical calculations(2) showed that 1 oz of explosive could be expected to be detectable to 60 km. An available grenade (type BA) contained this weight of charge and a number were substituted for the standard grenades in the Skylark grenade bay for evaluation purposes. Acoustical detection of

this small grenade has been achieved to 70 km on all occasions[3] and with the use of Multiplex acoustical recording to 82 km.[4]

3. The Nike-Cajun/Apache grenade bay and its applications

In order to extend grenade experiments to sites other than Woomera for the purpose of global wind and temperature studies, an alternative grenade payload to the Skylark one was considered necessary. The extensive use of Nike-Cajun/Apache at a large number of sites made this an attractive vehicle for which to design.

The grenade payload was chosen to consist of 18 small (BA type) grenades and 7 standard (GW type) grenades. The smaller grenades are sideways mounted and may be ejected immediately after Cajun burnout (at 15 to 18 km) or after Apache burnout (at 19 to 21 km). The larger grenades which eject through the nose cone are intended for acoustical detection above 70 to 75 km. Both types of grenade may be released at heights between 100 and 150 km for glow studies at night, or up to 190 km at twilight.

The payload (Figure 1), which has been designed to UCL and NASA specifications by the Atomic Weapons Research Establishment, weighs 57 lb, and an apogee of 140 km is reached with Nike-Cajun or 185 km with Nike-Apache (for sea-level launch at 82.5° elevation).

For launchings under clouds only the acoustical application is possible and radio tracking may need to be employed. When clear skies are available the use of optics enables additional data to be obtained above 100 km, i.e. winds by cloud tracking, diffusion coefficients from cloud expansions, and temperatures by spectrometry at twilight. Possible payload applications are shown in Table I, cases 1 to 3. Case 4 is discussed below.

4. Liquid trimethyl aluminium (TMA) and grenades

The grenade payload described in Section 3 has been designed to be compatible with a TMA dispenser on a Nike-Apache rocket.

Table I Experimental applications of Nike-Cajun/Apache grenade bay

	Launch conditions	Vehicle second stage	Apogee (km)	Observations	Approx. grenade ejection heights
1.	Cloudy skies	Cajun (plus Doppler transponder)	120	Acoustical	Small 25 to 75 km Large 70 to 100 km
2.	Clear skies Night	Cajun	140	(a) Acoustical (b) Acoustical and glows	ditto Ditto with about 8 grenades from 100 to apogee
3.	Clear skies Twilight	Apache	185	Acoustical and glows	As 2(b) extending above 150 km
4.	Clear skies Night or twilight	Apache (plus TMA)	160	Acoustical, trail and glows	As 2(b) or 3 with TMA trail from 85 km

TMA was introduced by the Air Force Cambridge Research Laboratories in 1963 as a means of generating the AlO glow in trail form.(5) The glow is emitted above about 88 km altitude which is slightly lower, by about 10 km, than the minimum height at which grenade glows can be produced.

In addition to wind determination the trail offers the following observational possibilities:

(i) Determination of the height of the turbopause (at about 105 km), and observation of the scale of turbulence at lower heights.

(ii) Measurement of sonic velocity by optical observation of shock-waves from grenades detonated in the 100 to 140 km region of the trail, so enabling temperatures to be obtained in this otherwise observationally difficult region.

(iii) Determination of temperatures above about 120 km at twilight from AlO vibrational and rotational band structure.

(iv) Trail diffusion and photochemical reaction analysis.

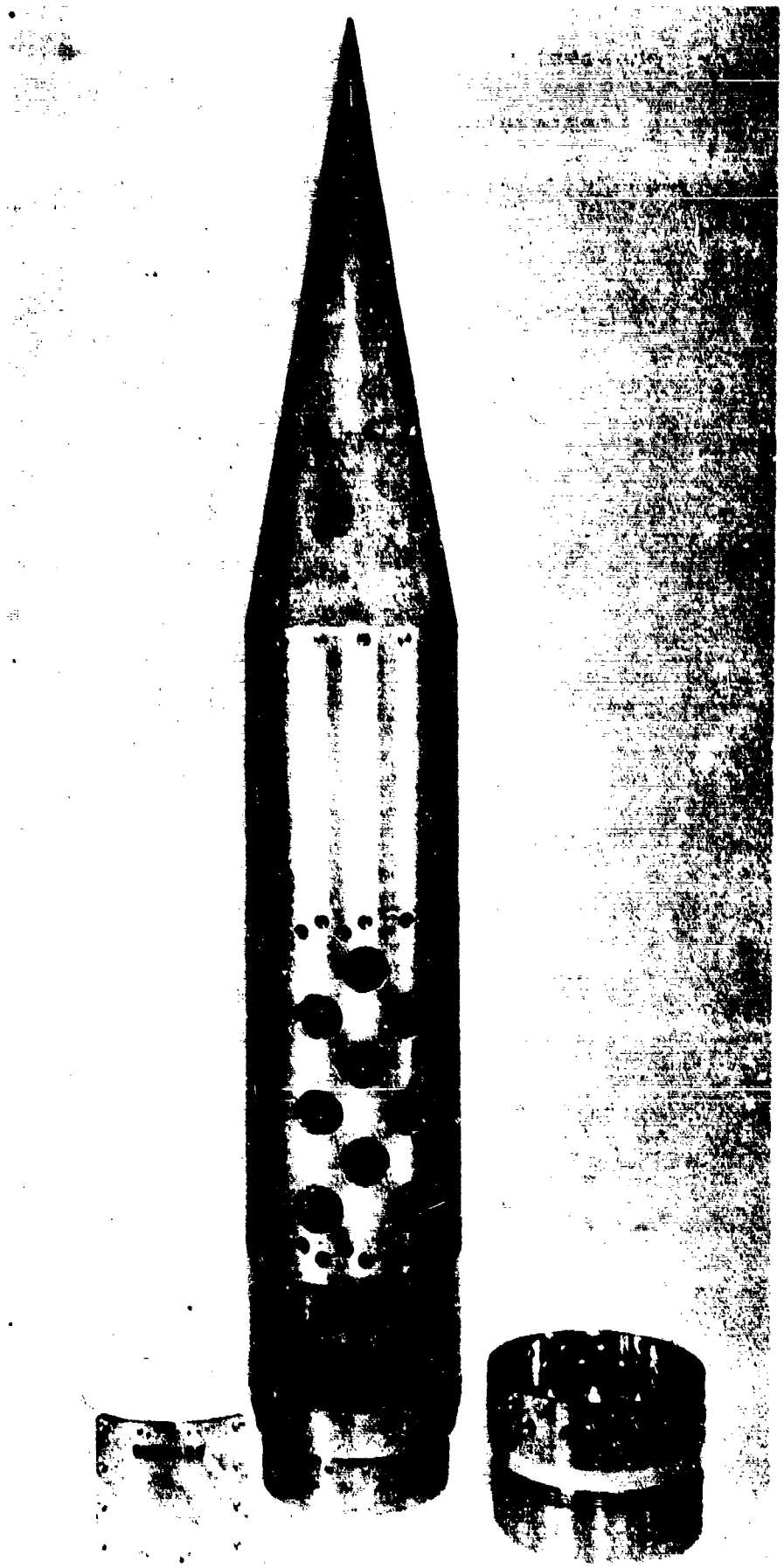

Figure 1 Nike-Cajun/Apache grenade bay of $7\frac{1}{2}$" diameter, designed by AWRE to a UCL requirement

The use of TMA in conjunction with grenades and the employment of acoustical and optical observations therefore provides extensive coverage of upper atmosphere wind and temperature measurements. The addition of TMA to an otherwise pure grenade payload is a worthwhile means of optimizing the field operations associated with the use of optical equipment and clear sky conditions.

5. ESRO Sardinia launchings, September-October 1965

In view of the foregoing remarks it was considered desirable to introduce TMA into the two Skylark grenade payloads to be launched by ESRO for Experiment R-48: "Measurement of winds and temperatures by grenade and trail release methods". Two TMA dispenser units were provided to UCL by AFCRL for this purpose and payload assembly was undertaken by ESTeC. The dispenser, which is normally carried by an Apache rocket, is $6^{15}/_{16}$ inches in diameter, and can be accommodated within the nose cone of the 17 inch diameter Skylark as shown (Figure 2).

The grenade bay which normally carries 18 standard GW grenades was modified to carry 12 of these, plus 12 small BA grenades, making a total complement of 24 grenades. These were released at heights between 50 and 180 km, the launchings taking place at morning twilight with a solar depression of 11°.

6. Nike-Cajun/Apache launchings, Pakistan March 1966

Figure 3 shows the grenade/TMA payload which has recently been successfully flight tested on the Nike-Apache. The payload content of 25 grenades plus TMA is almost identical with that previously carried by Skylark. In this flight grenades were released for glow production at night as well as for acoustic propagation.

A flight of the grenade payload alone on the Nike-Cajun has also been successful, grenades being ejected in the acoustical region.

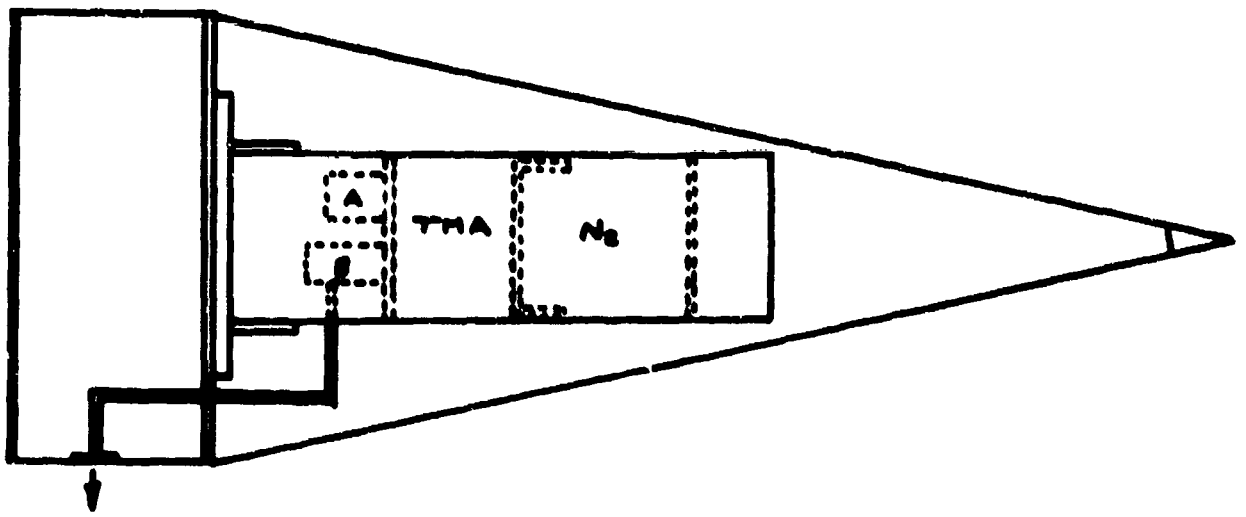

Figure 2 TMA dispenser installed in Skylark nose cone for ESRO payload I. A = timer, B = explosive valve.

Figure 3 TMA dispenser combined with grenade payload on Nike-Apache for Pakistan launch, March 27th 1966

Two further grenade/TMA payloads are scheduled for launch on Nike-Apaches at the Pakistan range before the end of April 1966 with slightly longer TMA dispensers, which are being provided to UCL by AFCRL.

References

1. G. V. Groves (1963) High atmosphere wind studies by Skylark rocket cloud releases. Rocket and Satellite Meteorology (Ed. Wexler & Caskey), North-Holland Publishing Company, Amsterdam, p. 60.

2 G. V. Groves (1964) Acoustic pulse characteristics from explosive releases in the upper atmosphere. Project Firefly 1962-63 (Ed. Rosenberg) AFCRL-64-364, p. 351.

3. G. V. Groves (1965) Diurnal variations in upper atmosphere wind and temperature structure at Woomera, 15-16 October 1963. Space Research V (Ed. King-Hele, Muller & Righini), North-Holland Publishing Company, Amsterdam, p. 1012.

4. R. W. Procunier (1964) Detection of acoustic pulses propagated through the Earth's atmosphere. Part II of Scientific Report No. 1 Determination of air density, temperature and winds at high altitudes, AF EOAR 63-82, 1 March 1964.

5. N. W. Rosenberg, D. Golomb and E. F. Allen, Jr. (1964) Chemiluminescence of trimethyl aluminum released into the upper atmosphere. Project Firefly 1962-63 (Ed. Rosenberg) AFCRL-64-364, p. 329.

Chapter III A Multiplex system for acoustic recording

R. W. Procunier

Abstract

A technique has been introduced for transmitting data from acoustic detectors to a recording centre in the rocket grenade experiment. The system comprises seven control frequencies in the range of 595-2975 c.p.s. which are amplitude modulated with pressure variations and two recording systems (i) ultraviolet pen, and (ii) magnetic tape. This has been shown to have the advantage of removing electrical noise encountered over long transmission lines and capability to electronically reproduce signals. Operated in the field it has been successful in extending the maximum altitude of detection of 355 gm grenades to 107 km altitude.

1. Introduction

Rocket firings for temperature and wind measurement by acoustical propagation have been carried out successfully from a number of geographical locations. In these experiments grenades are ejected and detonated at height intervals of a few kilometers as the vehicle ascends and the sound waves produced are received at an array of ground-based microphones. The detection of acoustic energy as it is received at ground level from a rocket launched grenade limits the maximum altitude of measurement and possibly gives rise to the major error in this experiment. The problem is one of receiving the signal and identifying it in the midst of natural pressure fluctuations.

Seven hot-wire microphones are spaced out in an array under the bursts in accurately surveyed positions up to 30 km from a central recording point and used to determine the time when the pressure deviates from the ambient at each detector. This information along with the initial coordinates of the burst and time of detonation is sufficient to determine the mean temperature and winds in a layer between successive bursts.

Previous instrumentation used was considered inadequate and development of a new system was undertaken with the idea of reducing extraneous noise generated in transmission and recording equipment, and improving the frequency response to achieve the maximum altitude of acoustic detection.

2. System requirements

The detector of acoustic energy is a hot-wire microphone comprising a Helmholtz resonator, with a six micron platinum wire in the neck coupling the enclosed volume and ambient air. This element, used to sense velocity changes, is kept just below red heat by passing a D.C. current bias of about 30 milliamps through it and readily changes temperature and resistance when the air in the neck of the resonator is in motion. As a non-linear detector, it has a frequency response dependent upon bias current and overpressure according to Figure 1. The voltage output indicated corresponds to the resistance change in the element when the appropriate D.C. bias from a constant current source is applied. Pressure variations of Figure 1 were obtained in a pistonphone of 10^6 cm^3 volume.

Assuming that we wish to monitor 1 dyne/cm^2 signals over a chosen area and record this information on a single recorder, we have to transmit -50 dbm signals (in the frequency range of 1-100 c.p.s.) a distance up to 30 km. In addition, 25 milliamps bias will have to be provided at each microphone. Although in the rocket grenade experiment only three microphones are required to determine temperature and two horizontal wind components, seven were incorporated in a single system as being a number sufficient to ensure reliability and a more precise fit of data.

Two wire telephone lines were selected as the method of communication between the detecting sites and the recorder, providing the simplest and most reliable link. Microphone sites are usually in remote areas suitable for rocket launches and it is desirable if these sites are located away from

manmade activity and visited only on a minimum number of occasions. Permanent installations of two wire lines are usually available for a good part of the distance to the recorder or if not twisted military cable may be used. Noise levels encountered on normal communication circuits are of the order of -35 dbm primarily at power generation frequencies where the reference level of 1 mw in 600 ohms (0 dbm) is the preferred signal level. To avoid interference with power frequencies, amplitude modulation of seven carrier frequencies is used within the frequency spectrum available.

The relative attenuation for various line lengths is illustrated in a series of measurements made at Eglin Air Force Base, Florida. Line attenuation as a function of frequency was measured using a 600 ohm oscillator and voltmeter and these characteristics are depicted in Figure 2. Approximate lengths are given, consisting of telephone circuits for a majority of the length sometimes passing through one or more exchanges and field wire for the last few hundred meters. One site (A-2) used a shielded line with the effect of greater attenuation at the higher frequencies and without benefit of reduced line noise. It is observed that the longer lines in general have the greater attenuation particularly at higher frequencies.

Utilizing the spectrum available while allowing each site a unique frequency, thus minimizing the number of tape recorder channels, is best accomplished with an amplitude modulated system. Transmission noise is reduced when the modulation is accomplished at the microphone and a modulator with self-contained battery (which also supplies bias current) was decided upon. This unit is remotely operated by a stepping relay actuated with a D.C. potential across the line. It has a 0 dbm output modulated with pressure variations for transmission to the recorder.

One system requirement was to produce a paper record of pressure variations at all sites simultaneously with timing and the initial time of detonation as determined by a photomultiplier. These last two channels

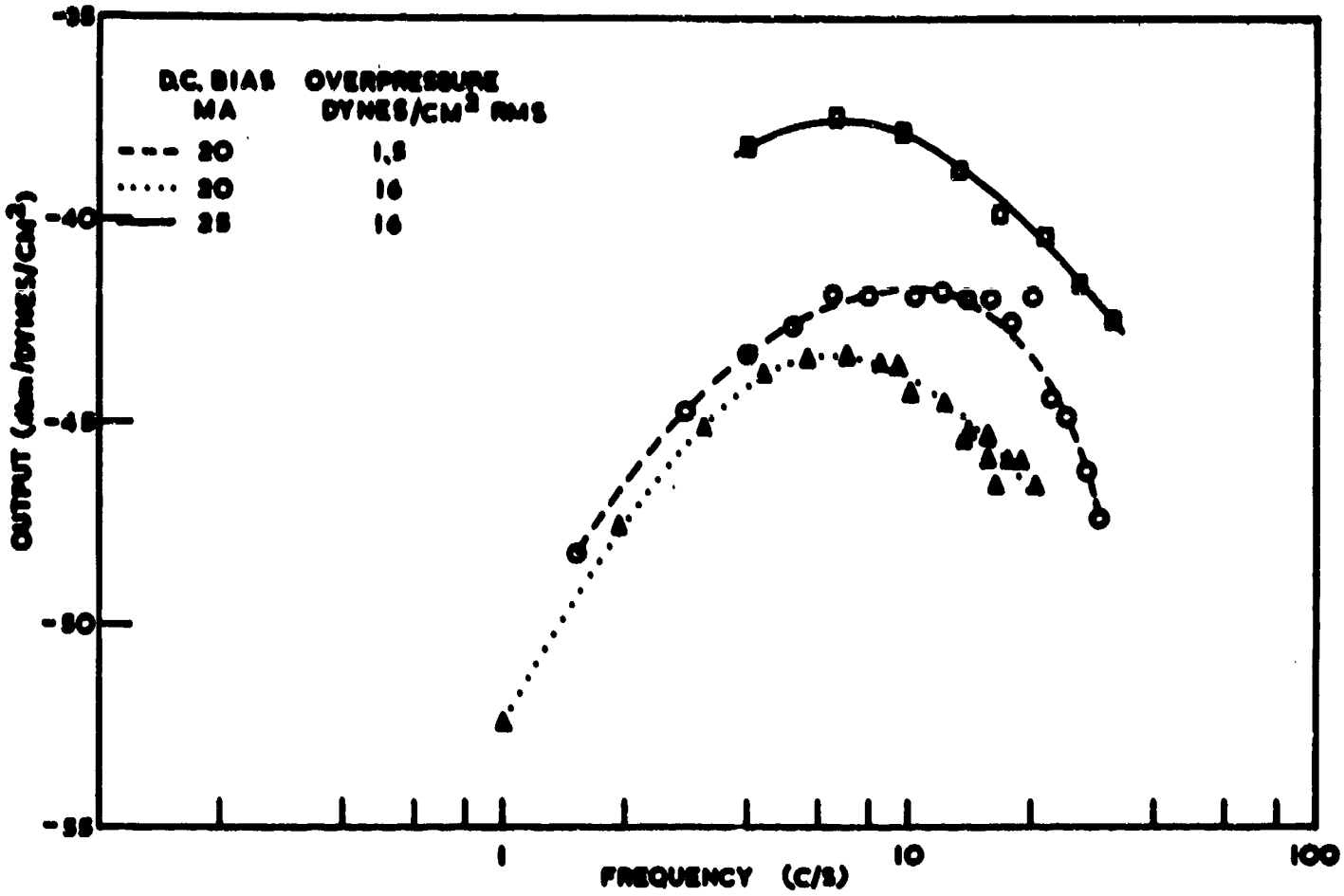

FIGURE 1 FREQUENCY RESPONSE OF THE HOT WIRE MICROPHONE

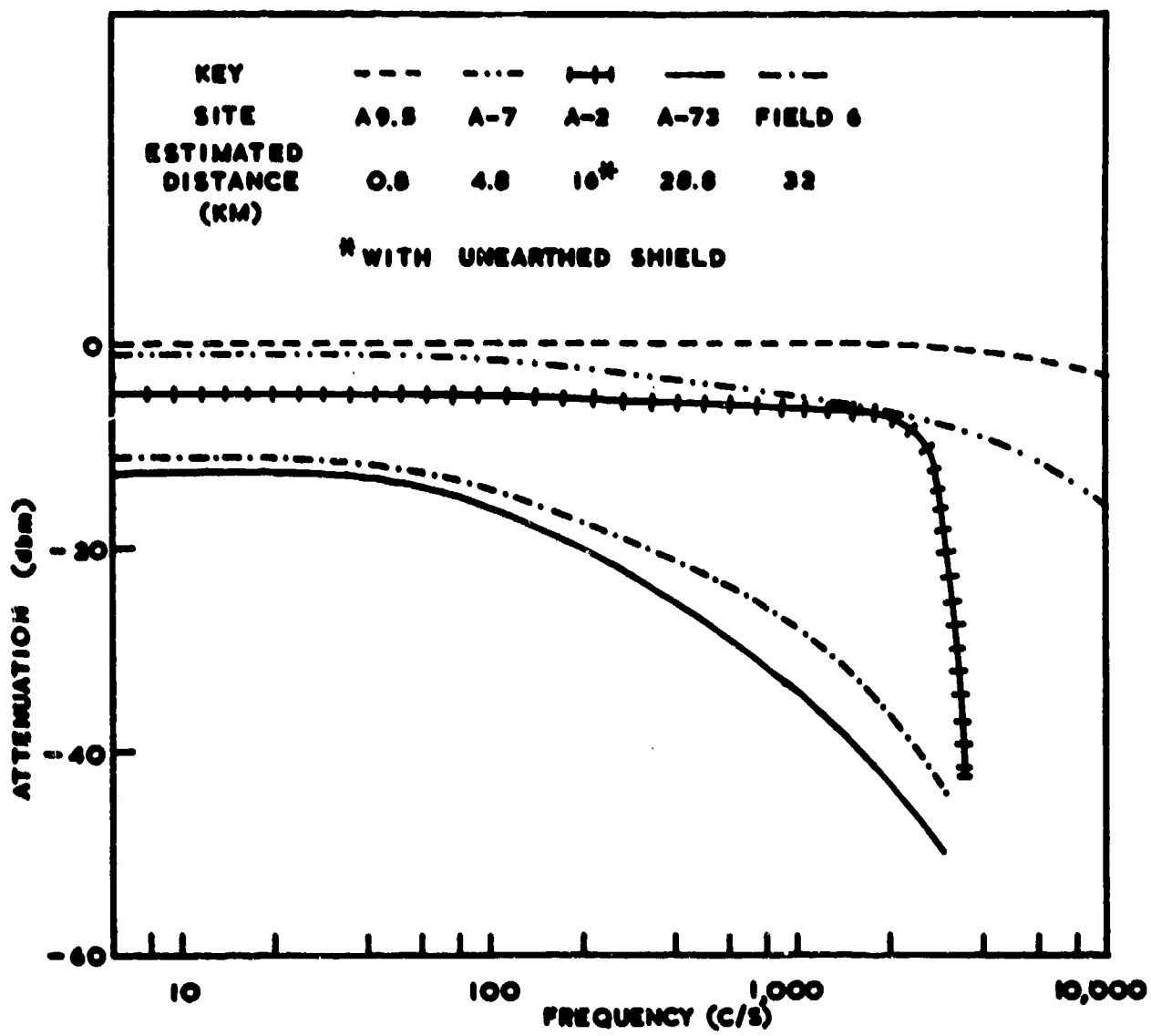

FIGURE 2 TRANSMISSION CHARACTERISTICS OF COMMUNICATION LINES AT EGLIN AFB

increase the frequency response requirements and ultimately an ultraviolet pen recorder was selected with response up to 5,000 c.p.s. The acoustic data is demodulated before recording. Electronic reproduction was also desirable so that various filtration techniques might be employed for weak signal recovery and this led to the selection of a parallel magnetic tape recorder. Here the modulated information from all seven microphones is mixed and recorded on a single tape channel, separation being accomplished during playback.

3. Description of equipment

The Multiplex system comprises seven microphone control units, a demodulation and control unit, an ultraviolet pen recorder and a magnetic tape recorder. A block diagram of the system is shown in Figure 3.

The microphone control unit produced in the final version by the Cordin Company of Salt Lake City, Utah may be seen in Figure 4(a) and the circuit in Figure 5. The constant current amplifier for microphone bias uses a 2N1132 and is adjustable from 15-30 ma indicated on a front panel meter. Power is provided by ten manganese or rechargeable nickel cadmium cells, size C whose voltage may be observed by pressing the battery monitor switch. The unit is operated either manually or if the power switch is left in the operate position by a 100 v. D.C. pulse stepping relay across the line.

A 2N1613 as an oscillator followed by a 2N1613 buffer provides the control frequency input to the modulator of 595, 935, 1105, 1615, 1955, 2465 or 2975 c.p.s. The microphone output arrives at the modulator via a four step attenuator corresponding to one order of magnitude reduction of peak signal required for 100% modulation. The modulator consists of four matched diodes. The balance control is normally slightly offcentred thus operating in a carrier present mode. After the modulator a low-pass filter with strong rejection at the second harmonic of the control frequency is inserted followed by a nine step attenuator. Audio amplification follows

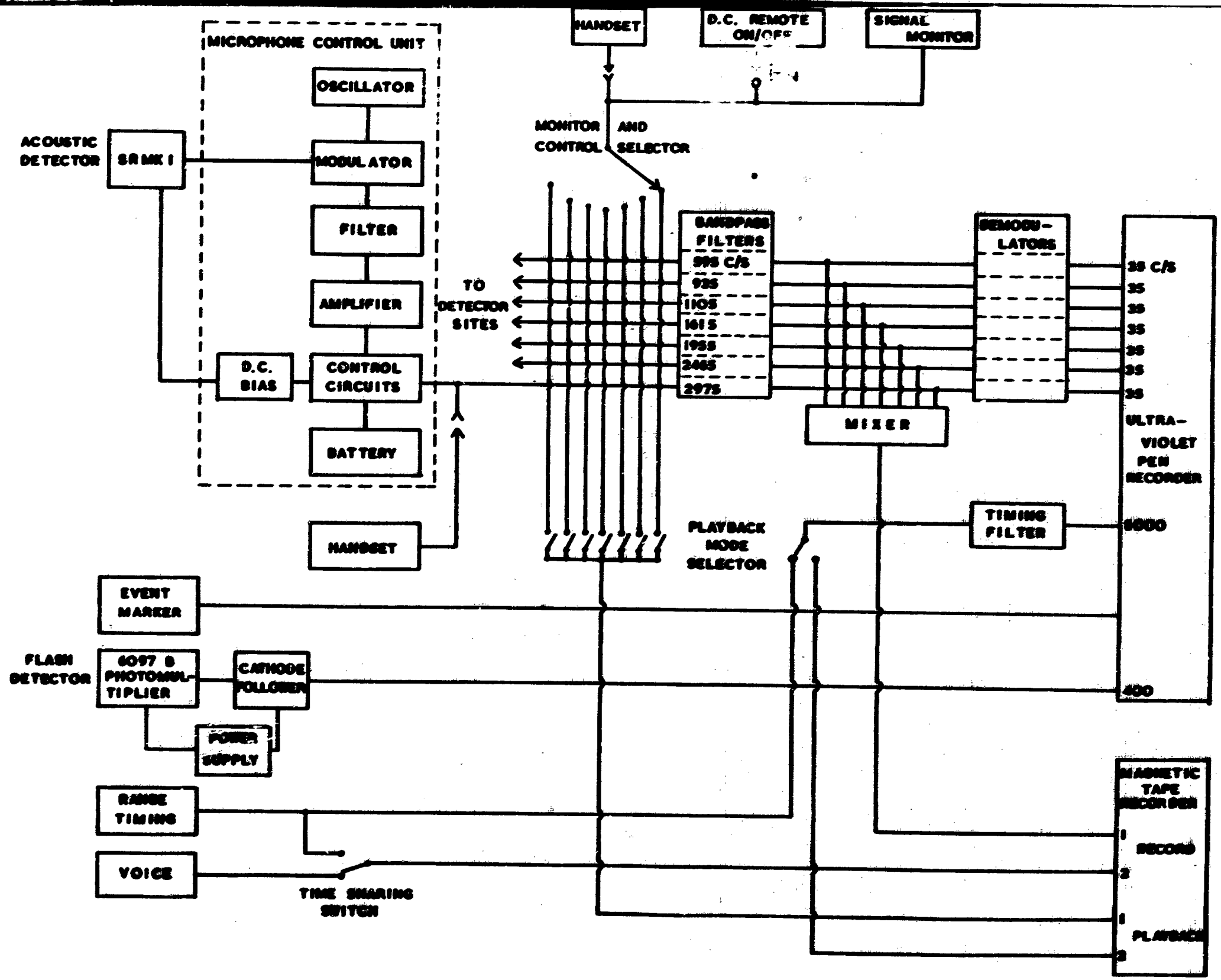

FIGURE 3 BLOCK DIAGRAM OF MULTIPLEX SYSTEM

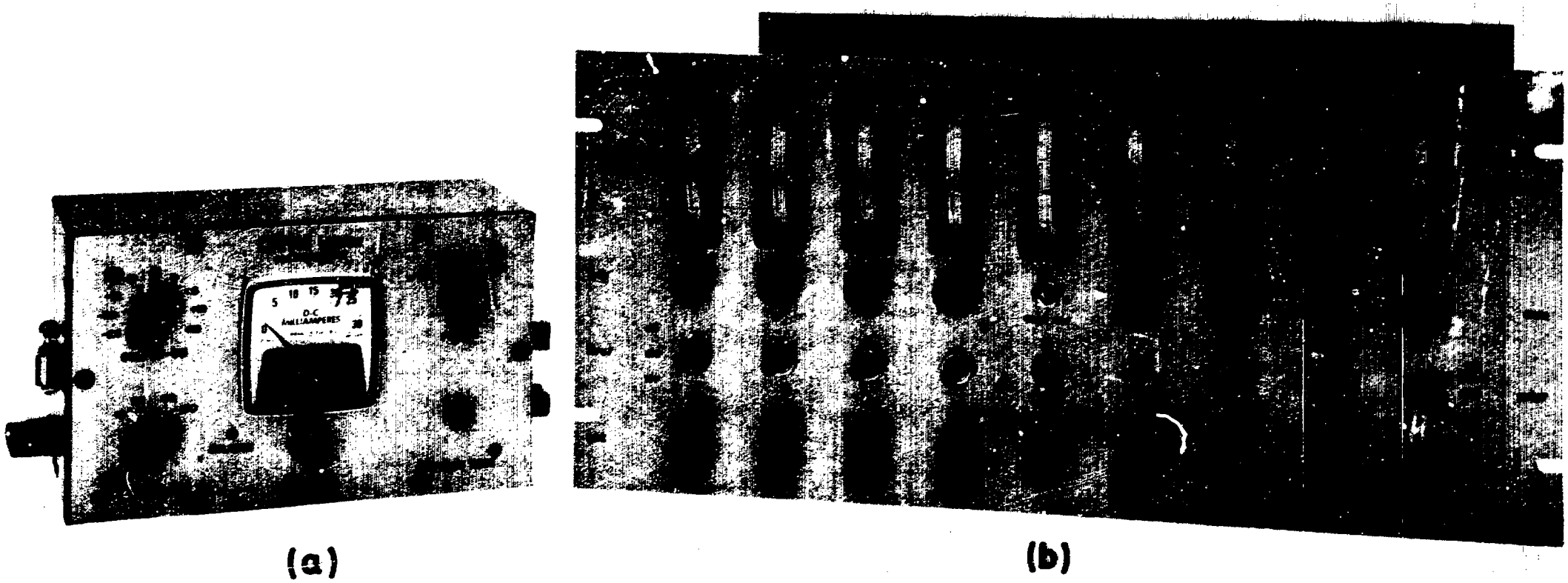

(a) (b)

FIGURE 4 (a) MICROPHONE CONTROL UNIT (b) DEMODULATION AND CONTROL UNIT

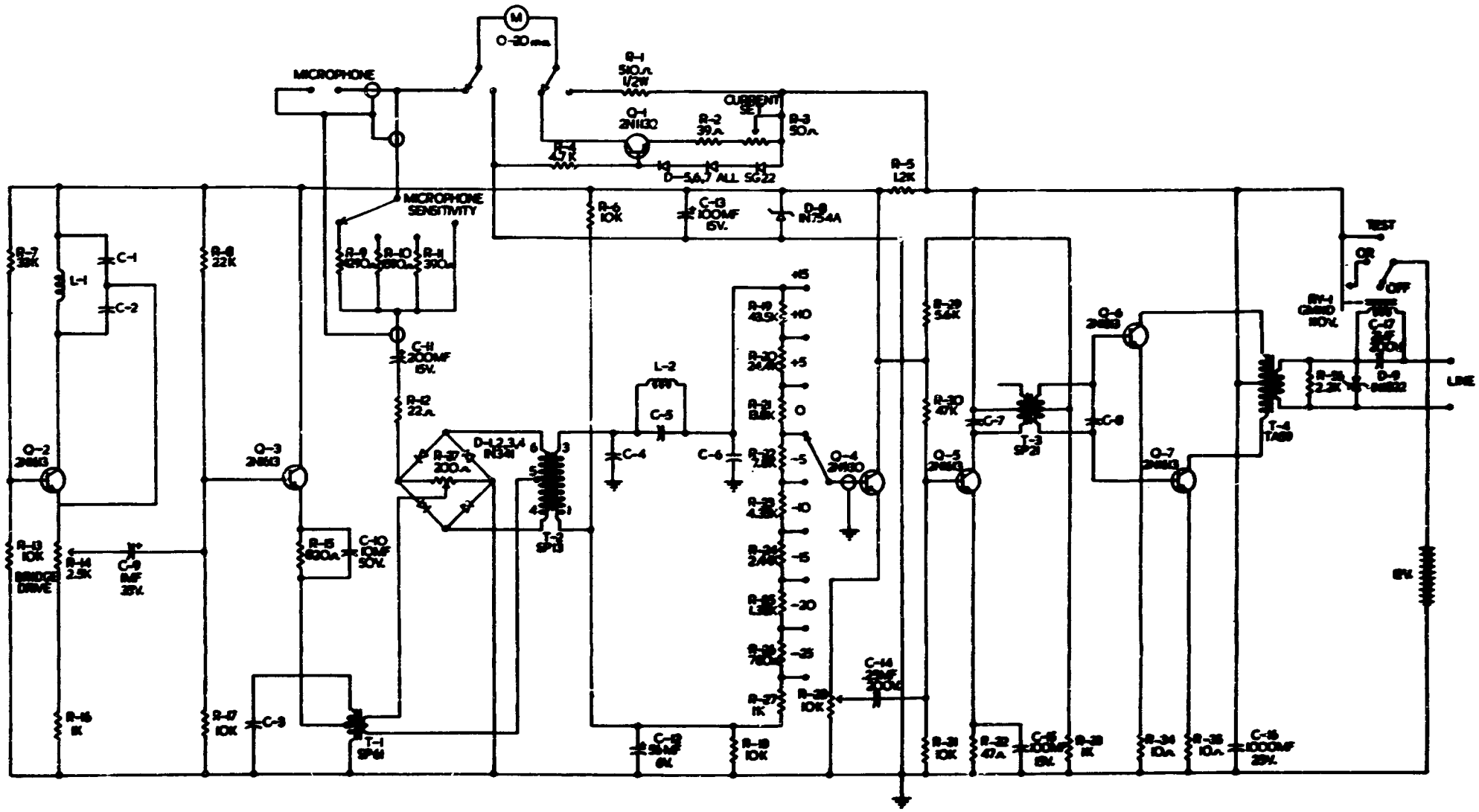

FREQ.	C-1	C-2	C-3	C-4	C-5	C-6	C-7	C-8	L-1	L-2
50	.2	.068	.018	.1	.015	.068	.06	.06	1hy	1.5hy
100	.1	.0152	.018	.06	.0068	.068	.04	.04	.7hy	1hy
1005	.1	.0152	.01	.018	.0044	.022	.018	.018	.5hy	1hy
1615	.1	.0082	.01	.02	.0027	.02	.022	.008	.3hy	.7hy
1885	.068	.080	.01	.02	.0017	.01	.0082	.0082	.2hy	.7hy
2465	.15	.0608	.01	.015	.00165	.01	.01	.01	.1hy	.5hy
2975	.068	.05	.005	.0082	.001	.0082	.0068	.0068	.1hy	.5hy

FIGURE 5 MICROPHONE CONTROL UNIT CIRCUIT

culminating in two 2N1613's in class B to provide output levels of -25 to +15 dbm and is transformer coupled to the line.

The Cordin Co. demodulation and control unit (Figure 4(b)) combines the functions of D.C. remote on/off, bandpass filter, mixer, demodulators and playback mode selector as shown in Figure 3. The circuit may be seen in Figure 6. Audio amplification is provided before demodulation or mixing and the output of each channel is monitored by a front panel meter. Additional monitoring may be accomplished with the use of a headset or by observing the waveform on an oscilloscope. Field phones may be used to communicate with a microphone site when it is manned.

An adjustable supply to 300 v. D.C. may be paralleled with any line by depressing the appropriate spring return switch. A manual pulse of about ½ second is sufficient to trigger a microphone control unit in this way or lines may be connected to recording and monitor circuits using this switch.

In the record operation each control frequency is separately filtered before mixing to a single magnetic tape channel or demodulated for individual ultraviolet pen recorder channels. Filtration is done to remove transmission line noise. In the playback mode these bandpass filters separate the seven control frequencies from a single magnetic tape channel. United Transformer Corporation TGR series filters are used and have the measured characteristics shown in Figure 7.

Although seven frequencies are used, provision is made for eight demodulation channels each with a mixing level control on the front panel. In addition a separate adjustment is provided for the demodulated output consisting of amplitude, low frequency cutoff and high frequency cutoff.

The paper record is produced on a S.E. Laboratories type SE2800 ultraviolet pen recorder. This direct writing oscillograph uses up to 25 interchangeable moving coil galvanometers covering the frequency ranges 0-35 c.p.s. to 0-5000 c.p.s. Four widths and fifteen paper speeds may be used.

For acoustic measurements 6 inch paper at a speed of 10 cm/sec has been used with galvanometers of 35, 100 and 160 c.p.s. A timing channel is recorded simultaneously and the arrivals of acoustic energy at each site are read to the nearest millisecond.

An AKAI model 345 tape recorder has been used with ¼ inch magnetic tape to simultaneously record the information for reproduction purposes. At 7½ inches/sec the response of this unit is 40 to 21,000 c.p.s. It has 80 db separation between channels one of which is used for the seven mixed microphone control frequencies and another for a modulated timing reference.

4. Field use

The Multiplex system has been used in various forms for a number of field trials commencing with Kronogard, Sweden and including Woomera, South Australia, Eglin Air Force Base, Florida, and most recently in Sardinia, Italy.

In the Sardinia campaign of October 1965 the recorders for acoustic information and flash times were housed in a two axle, 6.7 m long trailer. The interior of this unit showing Multiplex equipment, test instruments and service facilities is shown in Figure 8. Microphone control units were at the detection sites for a four week period and, although subject to a rigorous environment, operated 20 hours using manganese cells without any difficulties encountered. Data acquisition during the rocket flight for a period of about 500 seconds was achieved with 100% reliability. A sample record 269 seconds after launch (SE09) showing returns from a 25 gm grenade at 66 km is shown in Figure 9.

At Woomera previous acoustic instrumentation detected high altitude grenades to a 79 km average (21 firings). Using nearly identical acoustic sensors with the Multiplex system it was possible in Sardinia to detect a similar grenade (355 gm charge) to 107 km altitude. A paper on this work is in preparation.[1]

Reference

1. R. W. Procunier, D. P. McDermott, G. V. Groves (1966) Extension of the grenade experiment to higher altitudes. To be presented at COSPAR International Symposium May 1966.

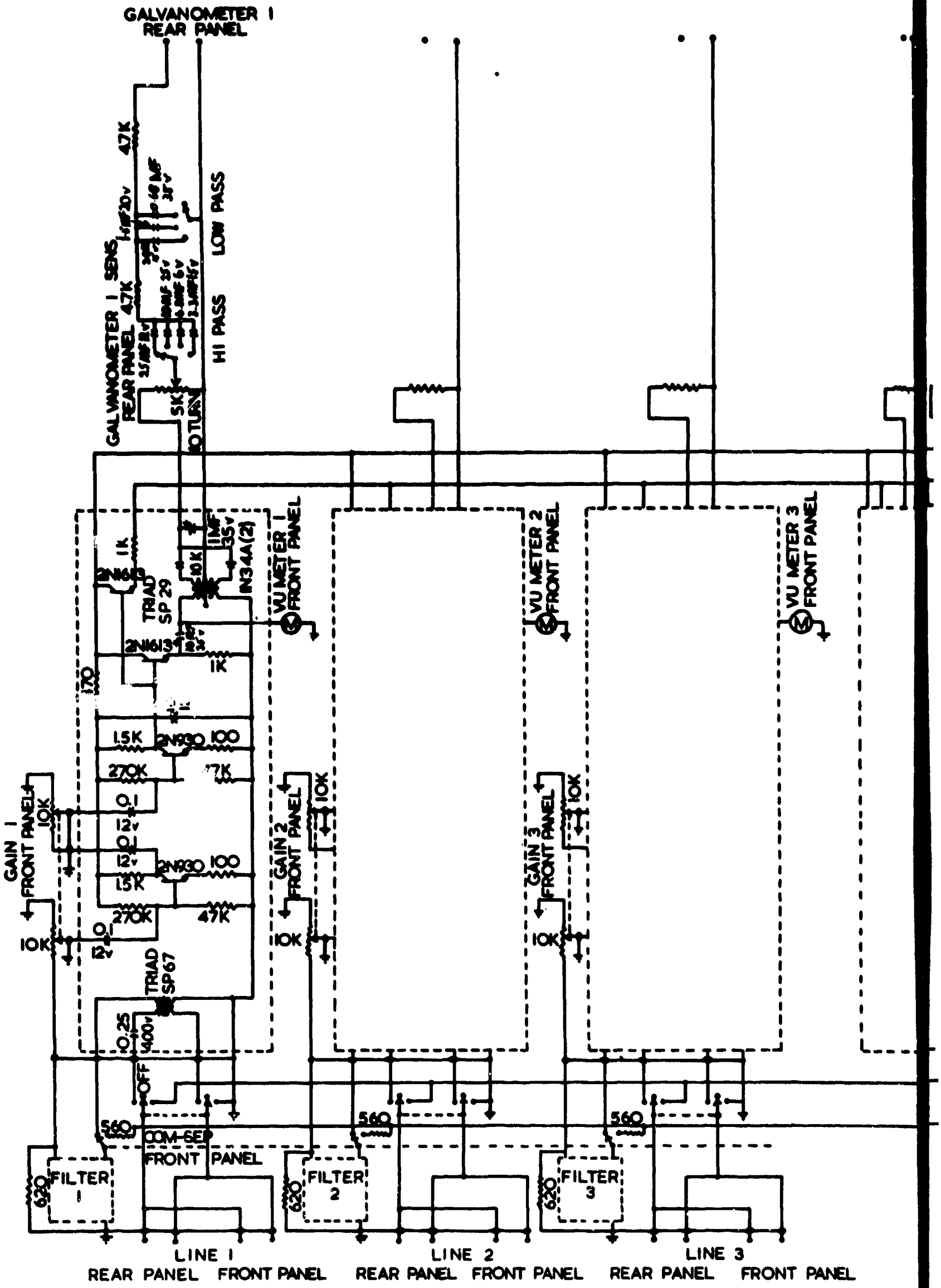

FIGURE 6 DEMODULATION AND CONTROL UNIT

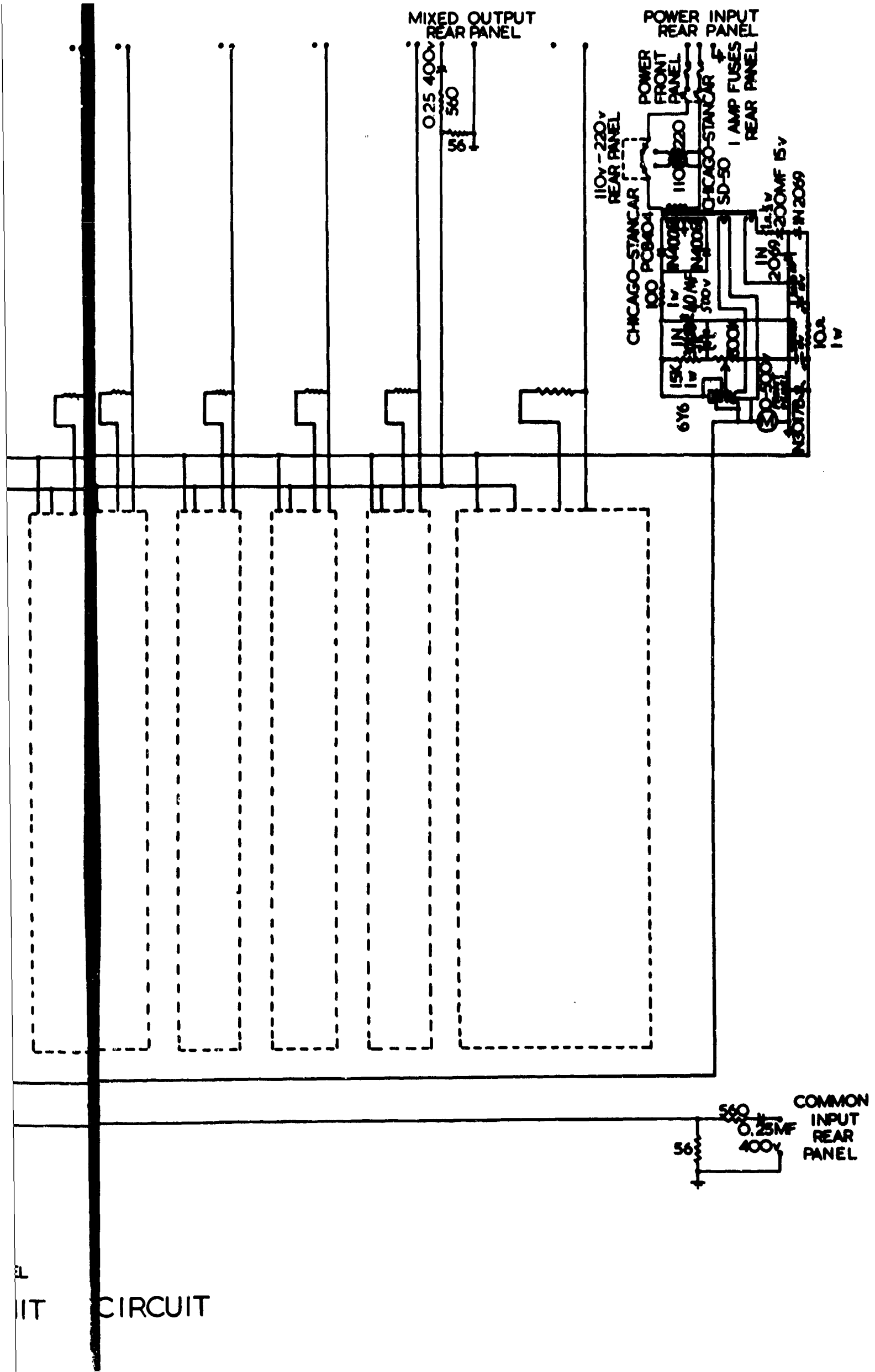

EL

IT CIRCUIT

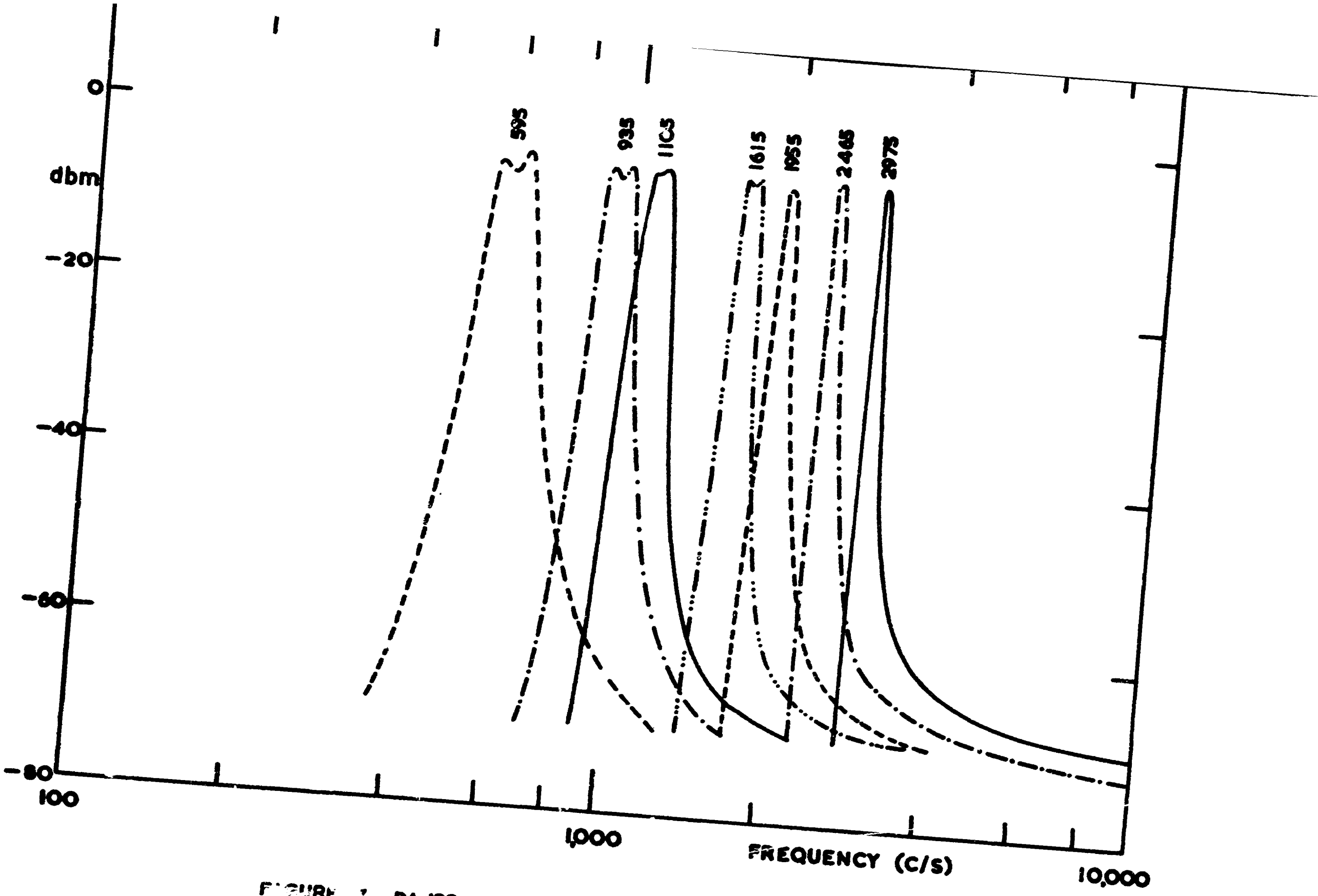

FIGURE 7 BANDPASS FILTER CHARACTERISTICS

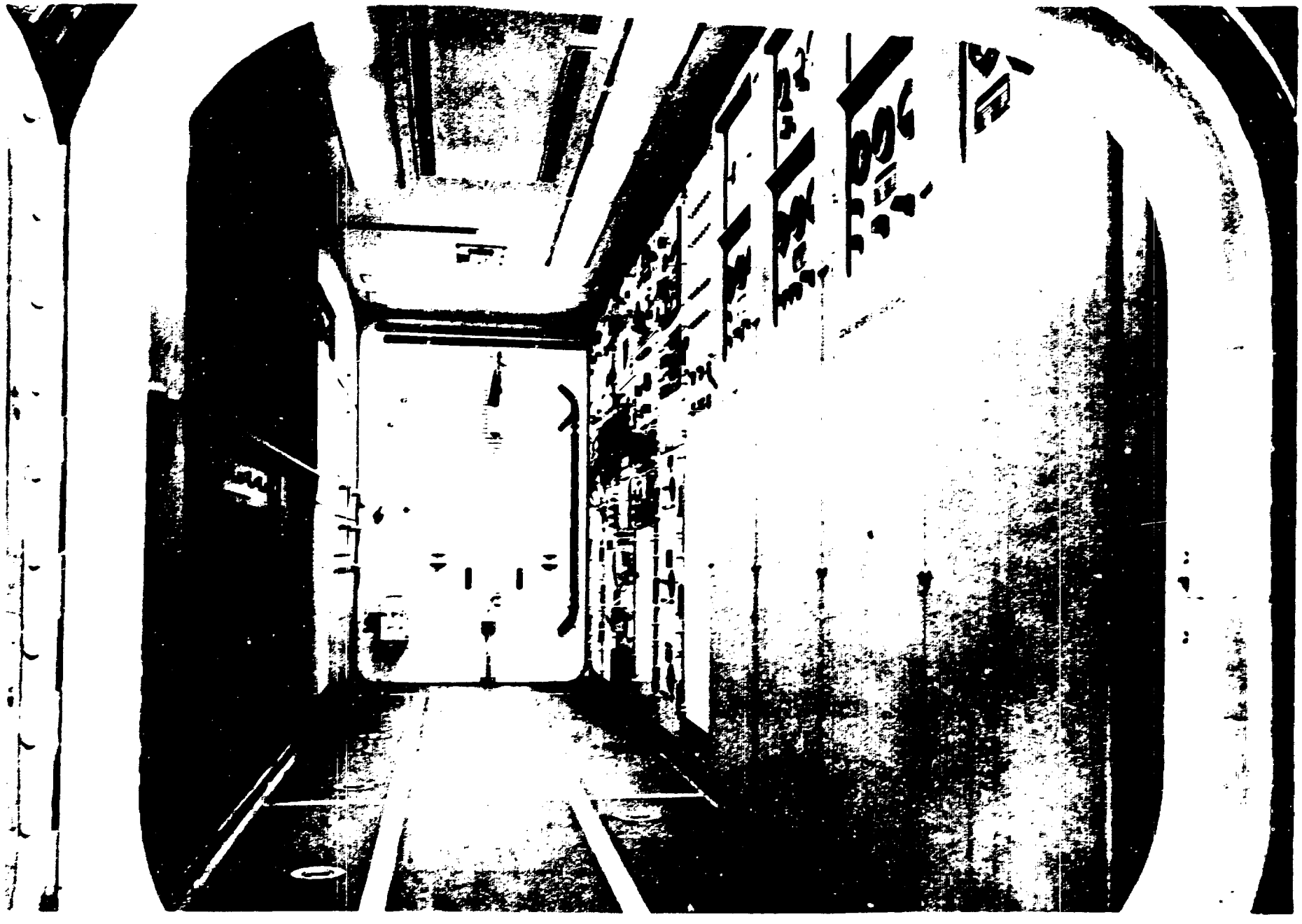

FIGURE 8 INTERIOR VIEW OF RECORDING CENTRE

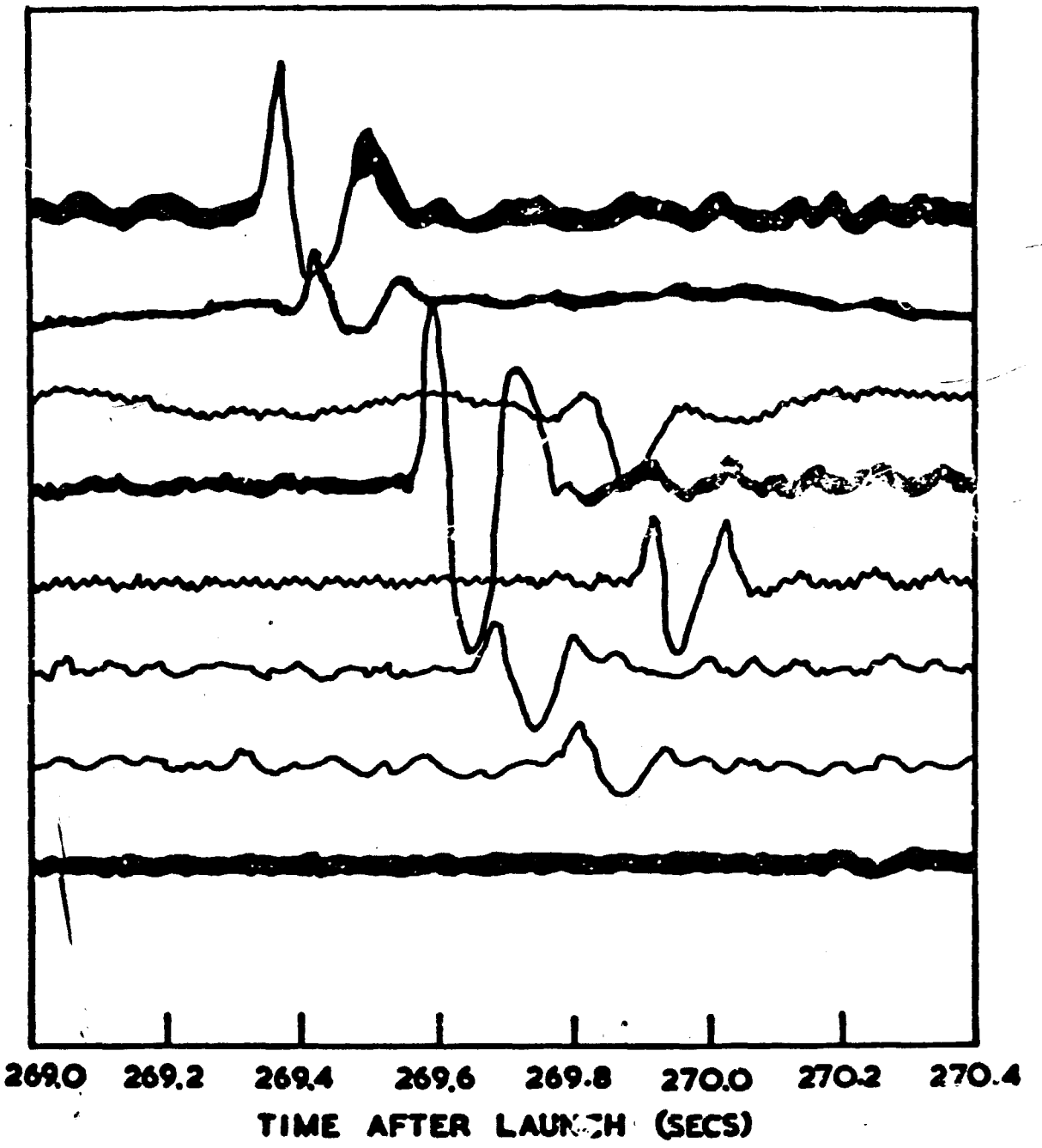

FIGURE 9 SAMPLE RECORD SHOWING ACOUSTIC DETECTIONS (SE 09, 25 G, 66 KM)

Chapter IV The optical triangulation of grenades for the Sardinia firings in September 1965

D. P. McDermott

1. Introduction

In order to obtain satisfactory results from the rocket grenade experiment, it is necessary to know the position of the grenades to within a few tens of metres. This accuracy is best achieved by optical triangulation, the grenade flashes being photographed against a star background from two or more sites. By making use of the known directions of certain reference stars and of the relative positions of the grenades and the reference stars it is possible to determine the altitude and elevation of the grenades from each site. With two sites four known quantities are then available, two altitudes and two elevations, and these are sufficient to determine the grenade position. However, more than two sites are generally used and a least squares calculation employed to reduce the errors. For the full theory see references 1 and 2.

2. F24 camera coverage

In the two experiments performed in Sardinia in 1965 four camera sites were employed as follows: Capo San Lorenzo, which was also the centre for the acoustic recording apparatus; Punta is Ebbas, which was 23 km north and 2 km east of Capo San Lorenzo; Alghero, which was 130 km north and 116 km west of Capo San Lorenzo; La Maddelena, which was 192 km north and 22 km west of Capo San Lorenzo. At each of these sites there were three F24 aerial-survey cameras. These cameras are fitted with 8 inch f 2.8 Pentac lenses and produce a frame 5 inches square on a continuous film 5½ inches wide. The original cameras were fitted with two roller-blind shutters but for these experiments the exposure blind was removed and replaced by the capping blind.

This enabled time exposures to be made, but had the disadvantage that the shutter could only be closed as the film was being wound on. Whilst this had no noticeable effect on the image, it did mean that the end of an exposure could not be accurately determined as it was not possible to tell precisely when the film began to move. The cameras were set on mounts that enabled some adjustment in altitude and full adjustment in azimuth to be made (see Figure 1).

It was originally intended that the three cameras at any one site should be operated in phase and a control unit was built which enabled the camera operator to wind on the film in all three cameras simultaneously and to open the three shutters simultaneously. However, a long exposure of about 50 seconds required to record all the acoustic grenades on one frame would result in serious fogging of the film in a twilight launch unless the experiment was carried out during late evening twilight, but this was found to be incompatible with the barium release experiment which required 20 minutes of solar illumination at apogee and hence an early twilight launch. It became necessary therefore to alter the control circuits of the cameras in the field so that two operated in phase, whilst the third was out of phase. This meant that during that part of the experiment when the grenades were being detonated, the cameras would be operated with 5 second exposures at intervals of 5 seconds. Thus two cameras would be open while the third was closed, and the third camera was open while the first two were closed. By this means there would always be at least one camera open at each site throughout this phase of the experiment. As it happened, weather conditions held the experiment back for so long that the Moon's position was eventually such as to interfere with optical observations, and hence the experiment was changed to morning twilight. Under these conditions the background light for an early morning twilight launch was no longer sufficient to fog the film and it became possible to revert to the original long exposure of about 50 seconds. A print from a typical such exposure is shown in Figure 2.

Figure 1 F24 camera and mount

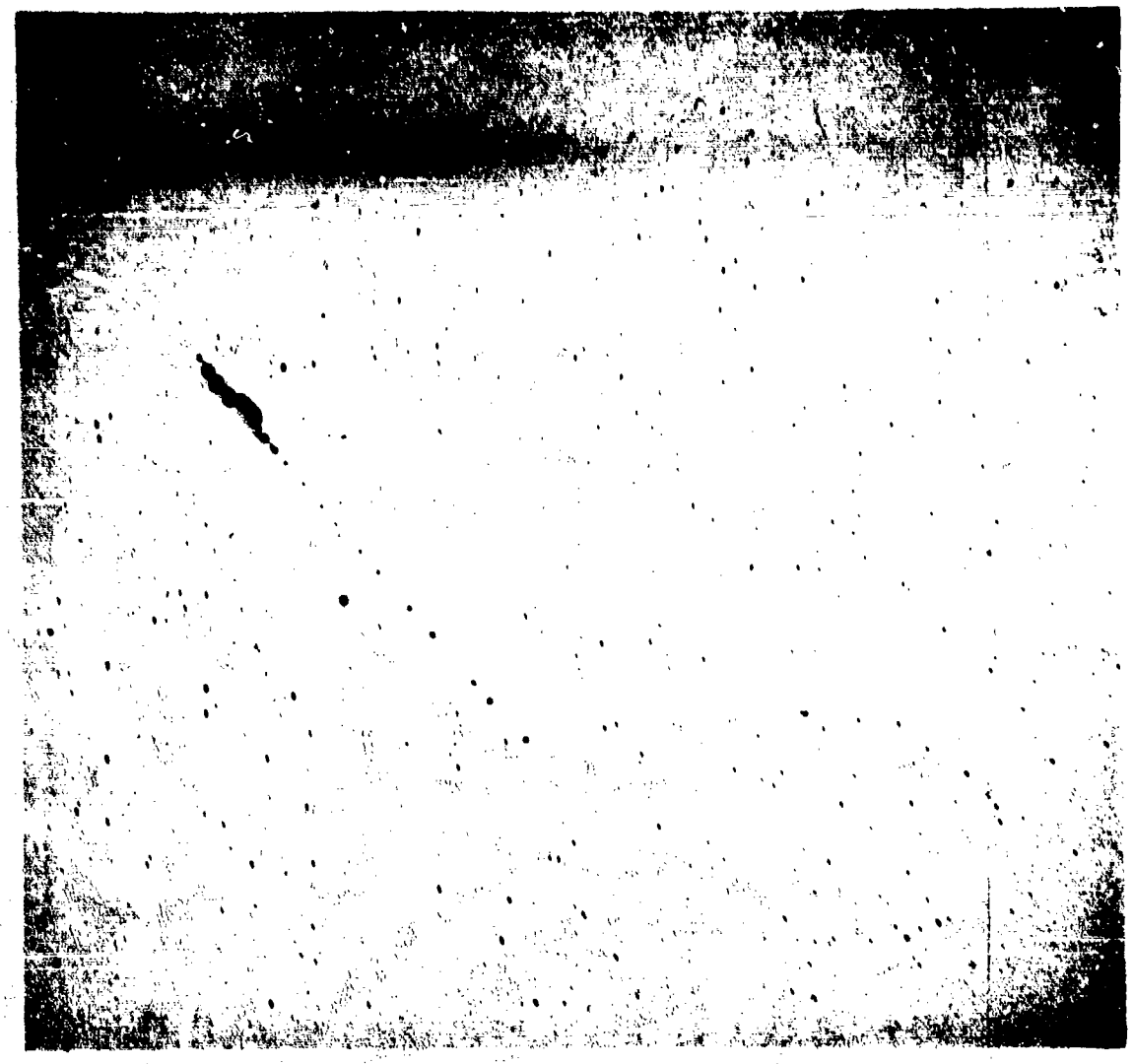

Figure 2 50 second exposure showing the first 18 grenades and beginning of the TMA trail of SE 08 from Capo San Lorenzo

3. Camera operation and monitoring

The combustion products from grenades detonated above about 100 km are chemiluminescent, and a study of their motion for some period after detonation can give a measure of the winds at these altitudes. Furthermore, a TMA trail was released from the rocket during its ascent above about 105 km. Observation of the motion of this trail also enables winds to be determined at these altitudes. To determine the motion of the trail and of the glow clouds remaining from the grenade explosions, a sequence was made of eleven 5 second exposures at 5 second intervals followed by a sequence of six 10 second exposures at 20 second intervals. In the interval between these exposures the out-of-phase camera was of course open, this camera being closed during the exposure of the other two cameras. This meant that a complete record would be obtained until six minutes after launch. The complete exposure sequence is listed in reference 3. Since the cameras were manually controlled, it was necessary to record the actual exposure times and this was done by filming chronometers, which were compared with G.M.T. both before and after each experiment. In this way, the absolute time of the beginning of any exposure could be determined as this was necessary for calculating the positions of the reference stars referred to earlier.

At each of the three sites, Capo San Lorenzo, Punta is Ebbas and La Maddelena, there was also installed a ballistic plate camera. These cameras have 10.5 cm, f 5.6 Symar lenses fitted with a standard Compur MX/CROO shutter and are designed to take a photographic plate 18 cm square. These ballistic cameras were used solely for photographing the grenade explosions and the exposures for them consisted of one long exposure of 70 seconds to record all the grenades, followed by two short exposures each of 10 seconds. The two short exposures were designed to produce short star trails on the plates which are then easier to measure during analysis. The actual exposure times are given in reference 3. Similar short exposures were not possible with the F24 cameras because the shutters were linked to the film wind mechanism.

Reference 3 lists the relevant information regarding all the camera installations during these two experiments. At Capo San Lorenzo all cameras operated correctly and produced good results. At Punta is Ebbas the ballistic camera and the three F24's operated correctly, although the timing during the first experiment deviated from the programmed values and the third camera recorded only the lower grenades. At La Maddalena the ballistic camera operated corretly, but the F24's were incorrectly wired and thus did not give useful results, except for one long frame for the second experiment. At Alghero only one long frame was recorded as there appeared to be trouble with the shutter mechanism of at least one of the cameras.

4. Preliminary results

The following results have been obtained for grenade burst positions using the cameras at Capo San Lorenzo and Punta is Ebbas. Determination of winds from drifts of trail and glow clouds is in the process of analysis.

SE 08 September 30th 1965

Grenade Number	Time of detonation (in seconds after launch)	Altitude (km)
1	45.82	48.37
2	47.81	52.03
3	48.80	53.82
4	51.77	59.19
5	53.76	62.74
6	56.73	67.81
7	58.69	71.31
8	61.68	76.40
9	63.66	79.69
10	66.67	84.63
11	69.68	89.51
12	71.65	92.60
13	73.67	95.85
14	76.67	100.69
15	Failed to detonate	
16	82.74	109.58
17	85.75	113.92
18	88.76	118.24
19	91.76	122.44
20	95.78	127.96
21	103.74	138.32

SE 09 October 2nd 1965

Grenade Number	Time of detonation (in seconds after launch)	Altitude (km)
1	47.23	51.64
2	49.21	54.72
3	Failed to detonate	
4	" " "	
5	55.19	65.86
6	58.18	71.01
7	60.18	74.44
8	63.17	79.46
9	65.11	82.65
10	68.11	87.52
11	71.07	92.23
12	73.03	95.41
13	74.98	98.41
14	77.90	103.40
15	80.9	107.28
16	83.70	111.48
17	86.62	115.70
18	89.58	119.80
19	92.46	124.49
20	96.38	129.12
21	104.24	138.34

References

1. G. V. Groves & G. Owen (1960) Camera plate-reduction by means of star-field reference. Photogrammetric Record 3, 338.

2. G. V. Groves, G. Owen & M. Thorpe (1960) Determination of position of a point-object by triangulation in rectangular coordinates. Photogrammetric Record 3, 370.

3. Preliminary report on experiments no. R-48: measurement of winds and temperatures by grenade and trail techniques. Dept. of Physics, UCL, 7th October 1965.

Chapter V Specialised optical studies

D. Rees*

Abstract

This report reviews the development of optical equipment since September 1964 and includes the analysis of data obtained with some of the equipment at Eglin Air Force Base, Florida in February 1965 and in Sardinia in September 1965. It includes a summary of the theoretical developments necessary for the reduction of data, and also discusses the next stages of the research.

1. Introduction

Optical experiments concerned with measurements of atmospheric parameters by means of observations of chemical releases from rockets were first made around 1956-1958. Since then many experimenters, notably Armstrong (Woomera), Rosenberg (Eglin), Manring (Wallops Island) and Blamont (Sahara) have developed and used equipment to attempt measurement of various parameters with a considerable amount of success. This paper briefly describes the equipment which has been designed for making simultaneous measurements of temperature and density above 100 km altitude.

2. Experimental techniques

2.1 Spectrometry

Three photo-electric grating spectrometers have been designed. These utilise the 'blaze' angle of the gratings to achieve a maximum reflection efficiency of 75-80% at 5000 Å in the first order spectrum. The first, working at f 4, has been used in the experiments in Sardinia in September 1965 and surpassed its design performance by a factor of about three in both sensitivity and resolution. A second is now complete and will be used in conjunction with the first in Pakistan in April 1966. This is of basically

*Research Assistant, Norwood Technical College

similar optical design, working at f 8 to improve resolution, while the photomultiplier is cooled to -30°C by an alcohol/water mixture from a refrigeration unit. This type of cooling system is appreciably easier in use than the CO_2 snow system and also has a greater efficiency since replenishment is not required. The time to cool to -20°C is about 2 hours.

The third spectrometer is at present under construction and should be complete by June/July. This will be a one metre f 4 instrument which will have several refinements such as adjustable rate and length of scan. The resolution of this instrument on AlO cloud emission or similar radiation will be 0.2-0.3 Å and, on the chemiluminescent emission of light and sound grenade, about 3-5 Å. The time scan will be between 10 seconds and 10 minutes and the instrument will scan a range of between 300 Å and 3000 Å. The general design features are illustrated in Figure 1.

Recording is by means of an ultraviolet oscillograph running at 2.5-4.0 cm/sec, shortly to be supplemented by an Ampex tape recorder. Amplification is by means of a high quality electronic amplifier, modified for the purpose which also acts as a filter of dark emission noise. An audio tape recorder is used to record notes on the payload/equipment performance.

2.2 Grenade flash and shock wave detection

To supplement the streak camera (S.C.) for shock wave (S.W.) observations, a simple instrument, comprised of a graticule of 25μ clear slits, 1 mm apart set behind a field lens, was built (Figure 2). This is set up during the experiment so that the TMA trail from the rocket as calculated from the predicted trajectory is perpendicular to the lines of the graticule.

An A.C. amplifier with a bandpass of 5-50 c.p.s. is used between the photomultiplier and the ultraviolet recorder. A photomultiplier flash detector with a 2 transistor amplifier records the grenade flash and the shock pulse detector (S.P.D.) then, in theory, produces a stream of signals from the shock wave as it propagates along the trail and its image crosses the slits.

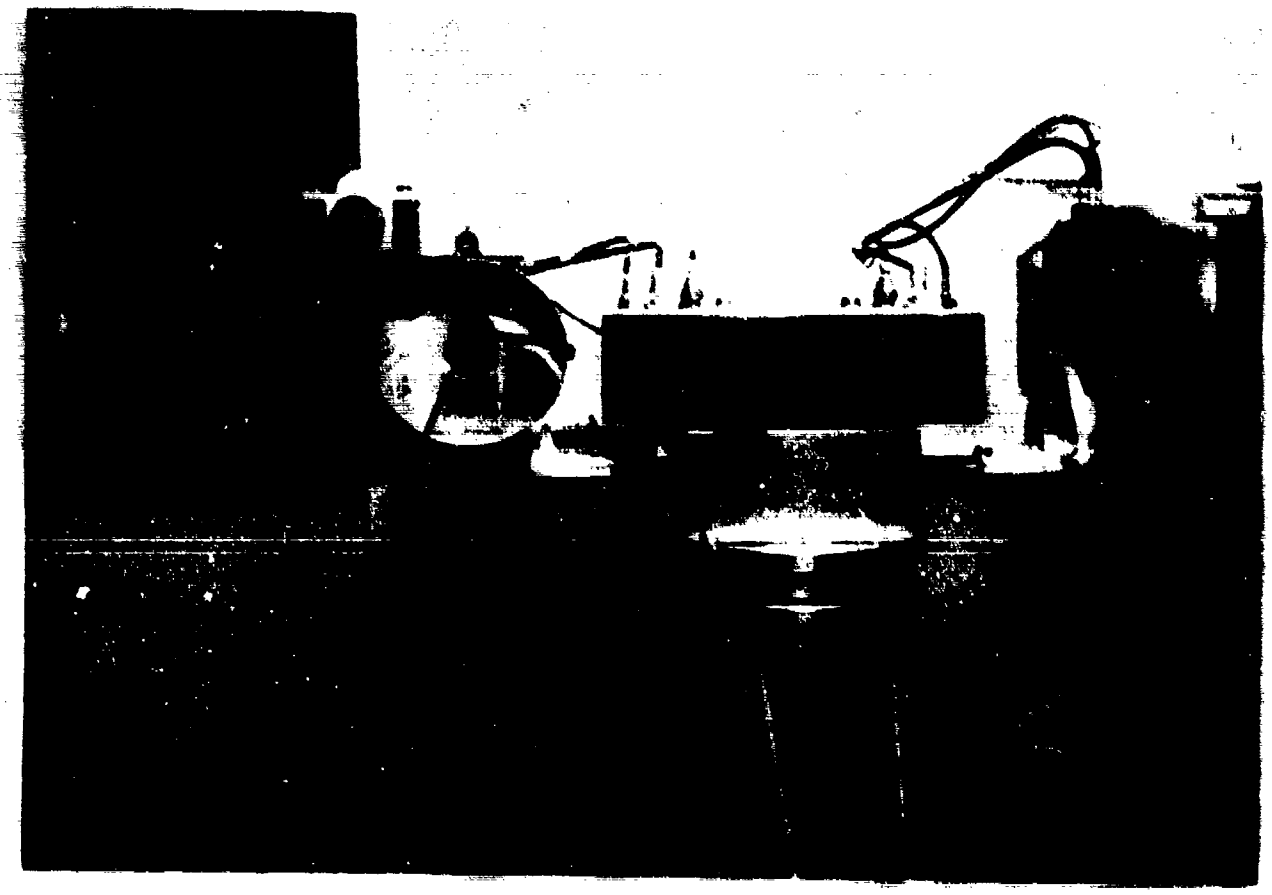

Figure 1 Spectrometers 'A' and 'B' mounted together with Pentax tracking camera, showing most of the external optical and electrical system, except for the refrigeration unit.

Optical system of 'A' (on the right) - f 4, 32" focal length perspex lens
Optical system of 'B' (on the left) - Cassegrain f 6, 48" focal length (perspex) system. The detection system of 'B' with cooling chamber connections is shown on the extreme left.

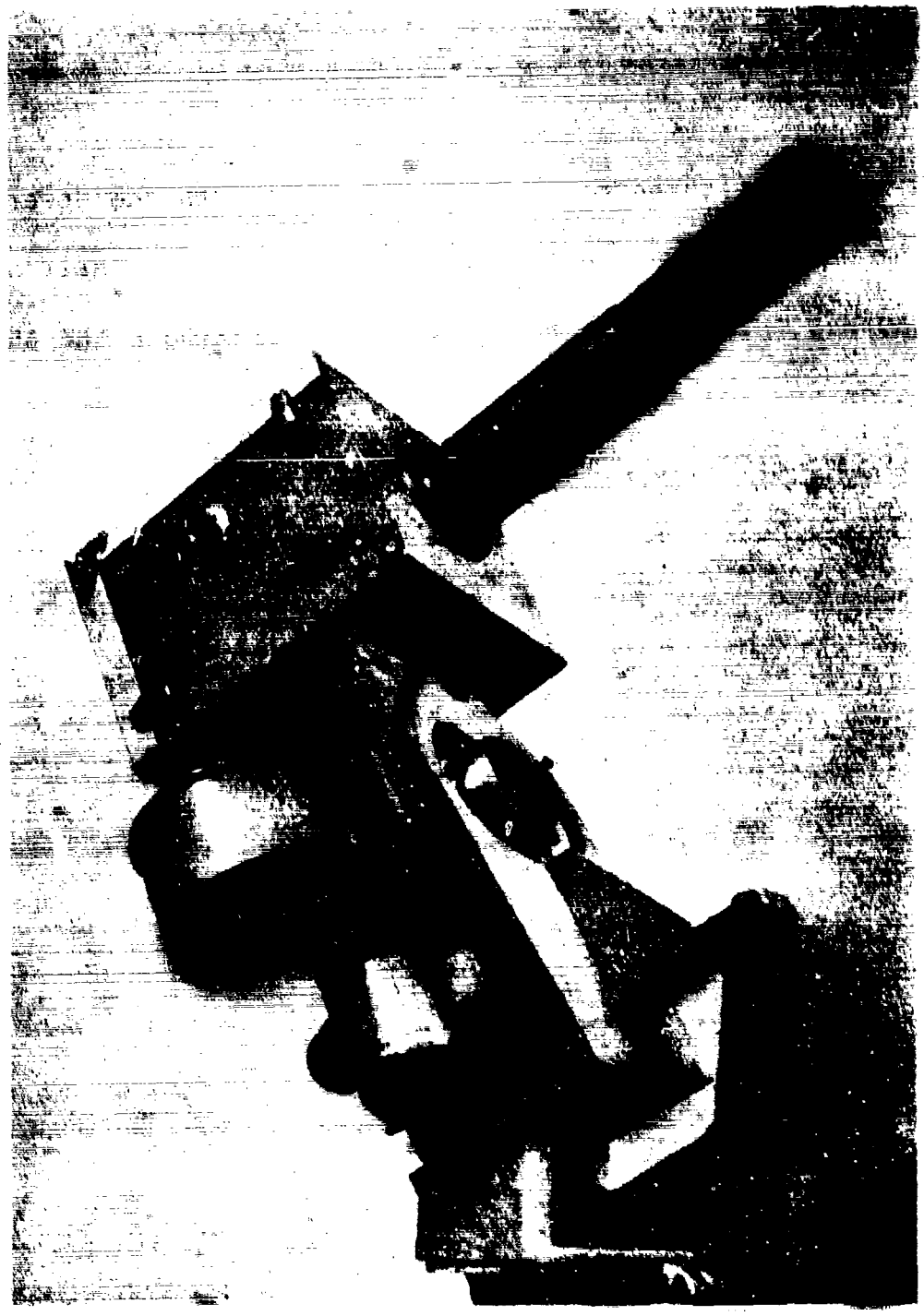

Figure 2 Shock pulse detector plus streak camera on a simple alt-azimuth mount, less electrical connections and flash detector required to complete the system.

Unless a series of three of more signals from both the upward and downward travelling wavefronts are detected, the analysis is complicated and there is loss of accuracy, since it is not possible to eliminate the energy of the grenade explosion and the ambient pressure. The probable error is in fact in this case 10%, compared with 1% or better when a total of 8 observations are recorded. Correction for the wind drift can be made theoretically thus eliminating error from that source. The greatest source of error is ½% to 1% due to inaccuracies in grenade position determination, necessary for calculation of the position angle of the trail with respect to the instrument (typically $\pm 1^{\circ}$, due to errors of ±30 metres in position).

The detection of signals is limited by the $\sqrt{n}$ noise of the emission of the TMA glow, etc. The limit of shock wave detection from the grenade burst should theoretically be 6-10 km. The limit achieved is 4.7 km, just sufficient for the full analysis to be carried out. In most cases only one or two pairs of observations are made with certainty, which gives a theoretically possible error of $\pm 20^{\circ}$K for temperature (after allowing for changes of mean molecular weight).

2.3 Photographic techniques

For the first time in Sardinia in September 1965 it was possible to compare the operational performance and results of four different camera systems recording TMA trail and grenade glow emission. These were

	Camera	Focal Length	Aperture	Exposure	Format	Film
1.	K19	305 mm	f 2.5	5 secs	9" x 9"	Aerial N
2.	F24	208 mm	f 4.0	5 secs	5" x 5"	Aerial N
3.	35 mm	50 mm	f 2.0	10 secs		HP3
4.	35 mm	45 mm	f 2.8	10 secs		HP3

It was found that 1 and 3 gave acceptable data for analysis, with 3 giving the best coverage (no missed exposures). The results of 4 were somewhat less accurate and those of 2 were of very little use other than for triangulation. The data from 3 and 4 was processed 3 hours after the experiment finished and took ½ hour whereas 1 and 2 took 1 month and 5 man days to process. Calibration time was about the same, with 3 and 4 giving the most consistent results. Actual plate measurements were carried out for all films with 3 and 4 taking about ⅓ the time per observation as 1 and 2. (On a typical experiment this would save 1½ weeks of work.) With this data and information in mind, a camera system for diffusion and chemical studies is being obtained consisting of 35 mm Nikon F automatic cameras with 85 mm f 1.4 lens system to use FP3 film in twilight experiments and HP3 film in night-time experiments with 5 second exposures either continuously or every 10 seconds. This will mean a saving of 1 to 2 operators per site per trip and about 150 lb per site per trip in freight (typically £250 per site per trip, or the cost of the camera). The data and reliability should each improve by a factor of 2.

Manual Pentax cameras will be used to track the spectrometers discussed in 2.1.

3. Theoretical aspects

3.1 Spectrometry

From the general theory of optical transition probabilities of molecules, the dependence on temperature of the spectral emission of molecules like AlO can be determined. As obtained by a spectrometer, the intensities are affected to various extents by

(a) lack of linearity in response (small)

(b) variation of sensitivity of detector with wavelength

(c) distortion and merging of band forms due to limit of resolution of spectrometer and bandpass effects of amplifier

(d) irregularities in scan rate of spectrometer (small).

To obtain a quantative analysis of these effects, the predicted band intensities have been calculated for a range of possible temperatures (300°K-1500°K) of both the vibrational and rotational structure. These have then been subjected to corrections for (a) to (d) as calculated from calibration spectra. The observational results were then compared with the calculated profiles. It was found that in general the band intensities were in good agreement with the calculated values, and by interpolation, temperatures were obtained which were interconsistent and in reasonable agreement with those from the shock pulse detector measurements (3.2) at 130-140 km and with CIRA 1965 tables in the range 150-180 km.

So far the spectrometer 'A' has only been used at twilight and thus it has not been possible to observe the night-glow emission. It is hoped in the next few weeks to obtain this data in Pakistan where spectrometer 'B' will also be used for the AlO emission analysis.

3.2 Theory of shock wave propagation

Where with a sufficient number of observations the reduction of sound velocity from shock velocity is a relatively simple matter, one of pure geometry, it is necessary in most cases to closely examine the theoretical expansion of the grenade's shock front and fit the observations to this theoretical expansion, firstly to eliminate the variation of shock velocity with distance from the explosion, and then to determine the velocity of sound. With six observations (three of each front) it is possible to achieve an accuracy to ±1%. With a lesser number of observations the error increases greatly but this is still comparable with the determination by any other method (± 20°K for a pair of observations).

The actual analysis used is that developed by Groves from Brode's numerical solution. This model has been found to give good agreement with observations within the limits of accuracy of either. The constants of the grenade bursts are not always in complete agreement, but further information

is required before a definite reason can be proposed for the slight discrepancy of 20% in E_0 between calculated and observed values. This could perhaps be a variation of grenade composition etc., or ambient pressure, though this discrepancy appears to be larger than the variation of other observable parameters such as total light emission and diffusion coefficient.

Information has been obtained in the range of 95 km to 138 km, which agrees quite well with predicted limits for the detection. It seems improbable that the upward limit can be extended greatly with the present size of grenade, due to the decreasing ability of the grenades to produce a shock front at lower ambient pressure. The lower limit is put at about 85-90 km where it is possible to make a glowing trail.

It seems improbable that a great instrumental improvement can be made, or is necessary, since the main barriers to detection are those of finite shock wave thickness, not being able to set up the equipment at 90° to the trail, and the 'noise' due to the emission of the trail and glow clouds.

3.3 Diffusion of grenade glow cloud materials and their reactions with the upper atmosphere

From the Gaussian solution of the spherical and cylindrical diffusion equations it is possible to evaluate the molecular diffusion coefficient in terms of the variation of the radius of the feature at which the optical line of sight intensity is 1/e of the maximum. In calculating this it is necessary to make several assumptions and determine under what conditions these assumptions are true. It is assumed that:

1. Wind shears can be neglected.
2. Diffusion is non-turbulent, i.e. molecular diffusion holds.
3. The cloud has a Gaussian distribution.
4. Diffusion does not increase the size of the feature too much during a single exposure and distort the profile (not critical).

5. The cloud remains detectable for a reasonable time, i.e. its brightness does not fall below a useful level above minimum detectability.

The theoretical technique used eliminates variation of radiant and background illumination, use of different cameras, film, exposures and change from night glow to resonance radiation during twilight experiments. Both trail and glow cloud observations have been analysed, providing conditions 1-5 hold (130-230 km).

Further calculations from total emission and its time and altitude dependence combined with spectroscopic observations enable determinations of the molecular reactions and their time and altitude dependence. It has not been possible so far to make sufficient observations to provide conclusive data on atomic oxygen concentration.

To enable calculations of diffusion coefficients to be made it is essential to obtain an accurate calibration of each film used and also to assess the camera performance. It has been found necessary to obtain 35 mm cameras with f 1.4, 85 mm lenses to obtain a maximum efficiency of light and also to obtain the necessary precision of calibration. Further improvement in lens characteristics would be desirable, but is beyond present resources.

4. Experimental data

4.1 Temperature determination

(a) Shock wave propagation: The experiment has operated successfully in both the Eglin and Sardinia programmes. The data obtained can be found in Figure 3 which is discussed below.

(b) Studies of rotational and vibrational temperatures of contaminant molecules The data obtained in Sardinia has been analysed using three techniques:

(i) that used by Armstrong;[1]

(ii) that used by Ove Harang;[2]

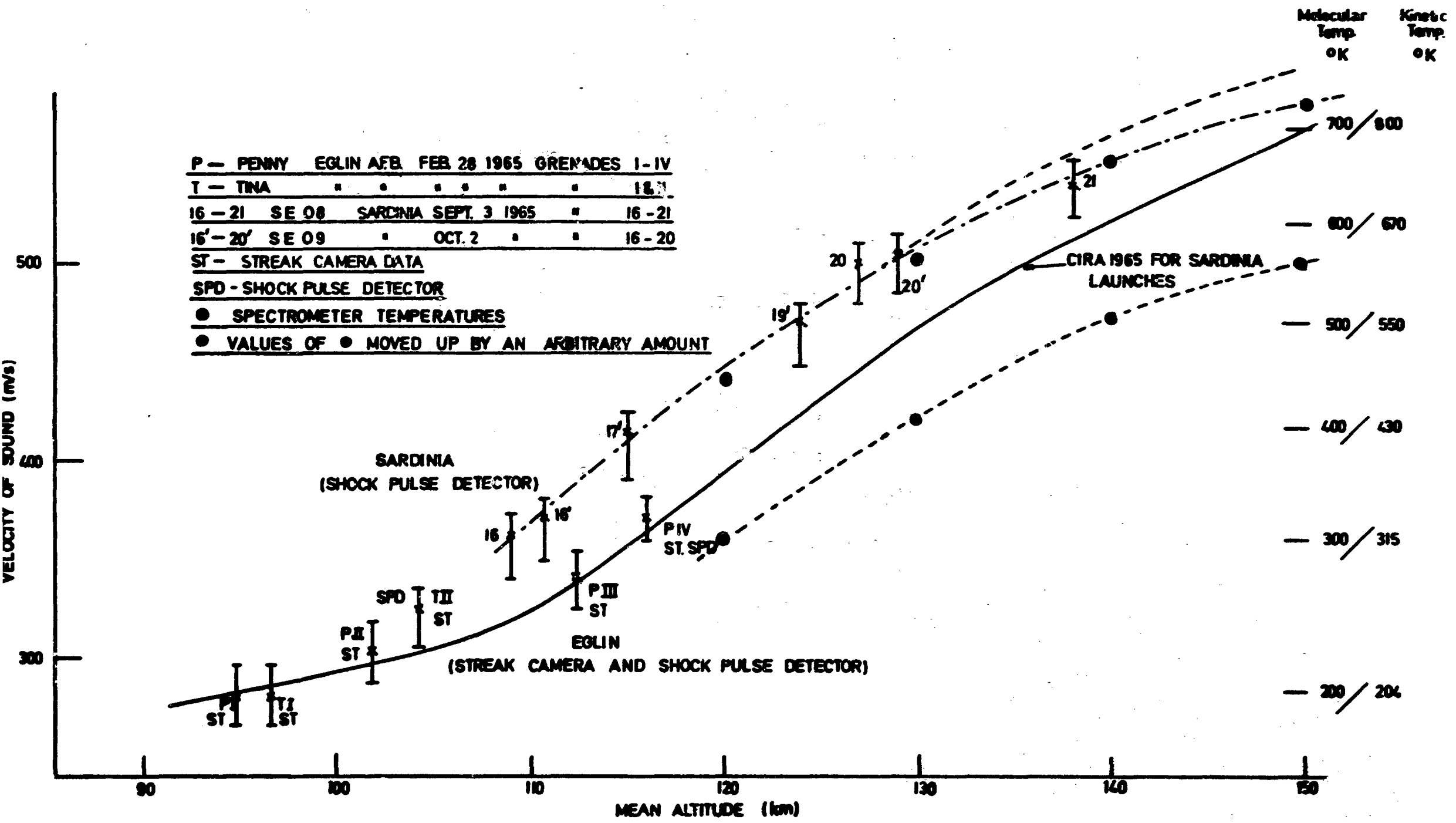

FIGURE 3 SHOCK WAVE AND SPECTROMETER TEMPERATURE DETERMINATIONS 95-150 KM, EGLIN FEBRUARY 28 1965 AND SARDINIA SEPTEMBER 30 AND OCTOBER 2 1965

(iii) by using observed values of Frank-Condon factors[3] (which agreed with those calculated by Nicholls) and carrying out calculations based on the measured constants of the AlO molecule.

It was found that (ii) and (iii) gave consistent results which are also in fair agreement with the results of (a). (i) seemed to be inconsistent at both high and low temperatures, while being in reasonable agreement at 600-1000°K (see Figure 3). This is probably due to use of incorrect molecular parameters and electronic configuration.

With the equipment used these results are quite good. The improved spectrometers shortly to be used will enable better data to be obtained at all heights but in particular in the region over 150 km where it is not possible to obtain direct data from any other source.

4.2 Measurement of molecular diffusion coefficients and deductions of molecular and atomic reactions occurring between contaminant and ambient atmosphere

The data obtained during the Eglin and Sardinia experiments is compared in Figure 4 with that calculated from CIRA 1965 and results of Lloyd and Sheppard[4] at Woomera in 1963. The reasons for the discrepancies are not clear. A similar type of analysis was carried out in both cases, making due allowance for instrumental and sensitivity effects on the data. The divergence between the results should be random of the order of 10% and not systematic at 40%. The sites are situated about the same latitude north and south of the equator and the solar activity was insufficiently different to explain the observed discrepancies.

4.3 Discussion of results

At this stage more weight can be given to the relative temperatures determined from the spectroscopic measurements (Figure 3) than their absolute values which could be in error due to errors in molecular constants or reduction technique. These errors will not apply to the results of the equipment shortly to be operated. It appears that the rates of rise of temperature with height

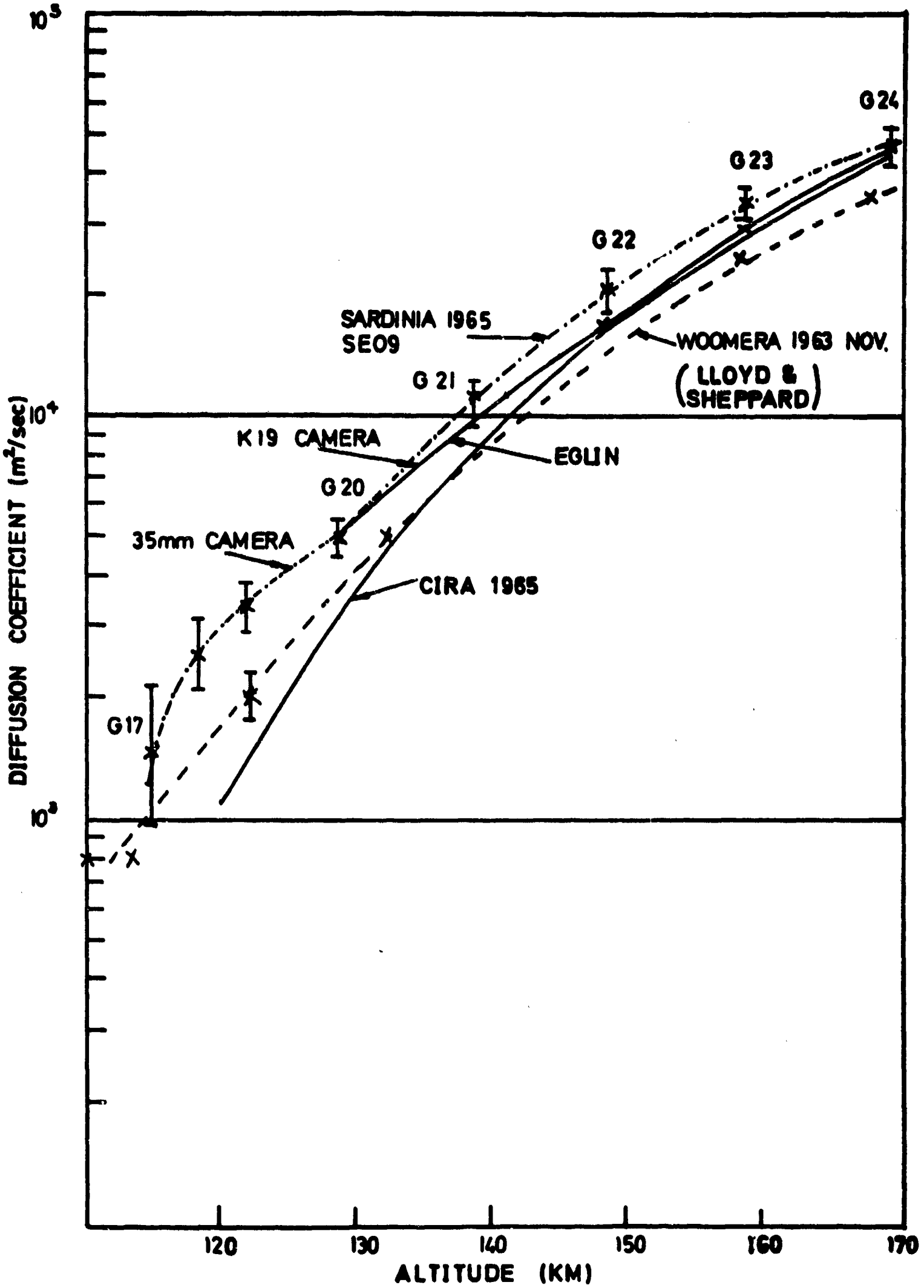

FIGURE 4 COMPARISON BETWEEN DIFFUSION COEFFICIENTS OBTAINED AT EGLIN AND SARDINIA WITH WOOMERA DATA AND VALUES CALCULATED FROM CIRA 1965

from 120 to 140 km for the spectrometer and shock wave methods are in agreement.

One interesting, though tentative, conclusion can be drawn from the apparent increase of temperature at altitudes of 110 to 140 km between February and September 1965. This would follow from the general picture of atmospheric circulation proposed by Johnson.[5] Due to the rising of heated air above the summer pole, with a consequent meridional circulation, a resulting adiabatic cooling of some tens of °K might be expected. Thus the air above the winter pole tends to be warmer and thus denser at high altitudes. The phase lags, as detected in the semi-annual density variation found by Jacchia[6] from satellite orbits, are such that maximum densities occur near the equinoxes and hence the measured differences could be explained in this way.

Unfortunately, a comparison of diffusion coefficient data is not possible between the two experiments, to the same order of accuracy, but the general trend (Figure 4) seems to be that this combination of higher density and temperature actually occurred in the two September experiments in Sardinia. These results may thus provide a link between the results of Johnson and those of Jacchia.

References

1. E. B. Armstrong (1963) Observations of luminous clouds produced in the upper atmosphere by exploding grenades - II Emission of AlO bands from sunlit clouds. Planet. Space Sci. 11, 743.
2. O. Harang (1964) Excitation of AlO bands in the sunlit atmosphere and the determination of the temperature from the distribution among the vibrational levels. Planet. Space Sci. 12, 567.
3. R. W. Nicholls (1962) J. Res. Nat. Bur. Stand. 66A, 227.
4. K. H. Lloyd & L. M. Sheppard (1965) Atmospheric structure at 130-200 km altitude from observations on grenade glow clouds during 1962-63. WRE Report HSA 19.

5. F. S. Johnson (1964) Circulation at ionospheric levels. Southwest Center for Advanced Studies, Report on Contract Cwb 10531, January 30.

6. L. G. Jacchia (1964) The temperature above the thermopause. SAO Special Report No. 150.